Dist	COUNTY	ROUTE	POST MILES TOTAL PROJECT	SHEET No.	TOTAL SHEETS
11	SD	8	10.5/12.6, R25.7/R26.1	31	136

Manuel Reyes 05-18-12
REGISTERED CIVIL ENGINEER DATE

06-04-12
PLANS APPROVAL DATE

REGISTERED PROFESSIONAL ENGINEER MANUEL REYES No. 58621 Exp. 12-31-12 CIVIL STATE OF CALIFORNIA

THE STATE OF CALIFORNIA OR ITS OFFICERS OR AGENTS SHALL NOT BE RESPONSIBLE FOR THE ACCURACY OR COMPLETENESS OF SCANNED COPIES OF THIS PLAN SHEET.

1 REVISED PER ADDENDUM No. 1 DATED NOVEMBER 19, 2012

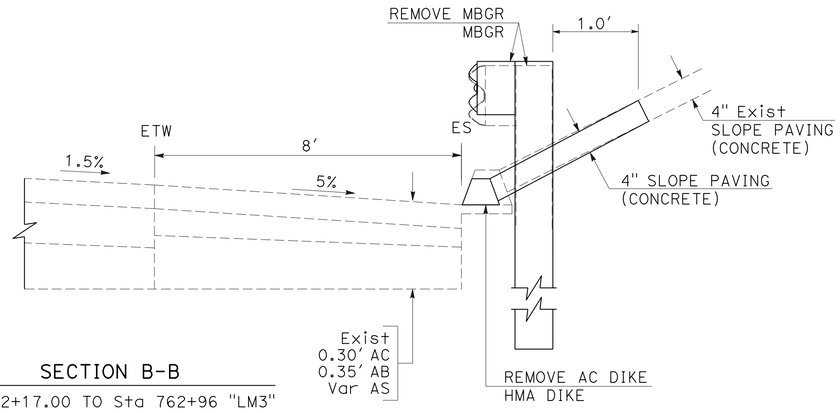

SECTION B-B

Sta 762+17.00 TO Sta 762+96 "LM3"

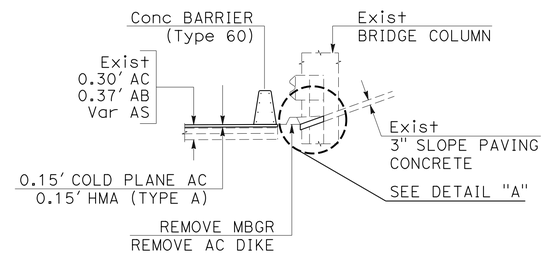

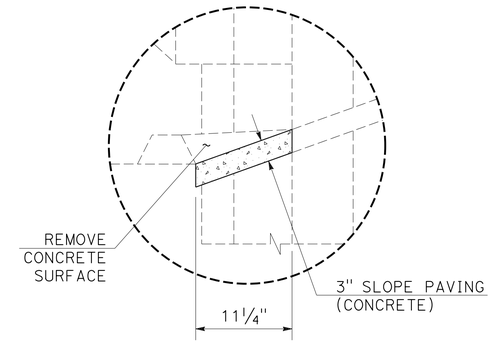

DETAIL "A"

SLOPE PAVING (CONCRETE)

WB Sta 714+71 TO Sta 715+42 "SD8E"
EB Sta 714+79 TO Sta 715+05 "SD8E"

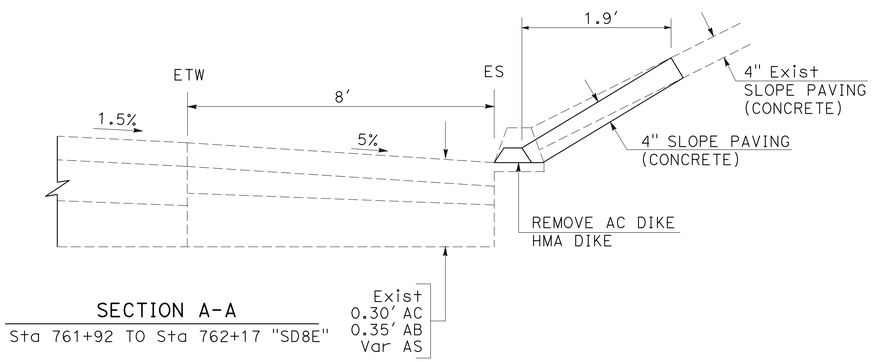

SECTION A-A

Sta 761+92 TO Sta 762+17 "SD8E"

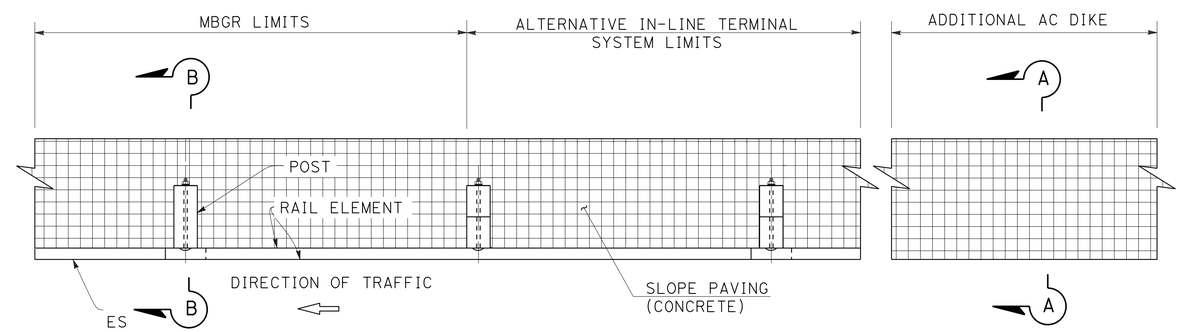

PLAN

SLOPE PAVING (CONCRETE)

Sta 761+92 "SD8E" TO Sta 762+96 "LM3"

CONSTRUCTION DETAILS

LOCATION 1

NO SCALE

C-12

STATE OF CALIFORNIA - DEPARTMENT OF TRANSPORTATION
Caltrans PROJECT TRAFFIC DEVELOPMENT

FUNCTIONAL SUPERVISOR: RICHARD ESTRADA
CALCULATED-DESIGNED BY: VAN D. CALLANTA
CHECKED BY: MANUEL REYES
REVISED BY / DATE REVISED

LAST REVISION 11-19-12 | DATE PLOTTED => 19-NOV-2012 | TIME PLOTTED => 09:11

Dist	COUNTY	ROUTE	POST MILES TOTAL PROJECT	SHEET No.	TOTAL SHEETS
11	SD	8	10.5/12.6, R25.7/R26.1	33	136

Manuel Reyes 05-18-12
REGISTERED CIVIL ENGINEER DATE

06-04-12
PLANS APPROVAL DATE

REGISTERED PROFESSIONAL ENGINEER MANUEL REYES No. 58621 Exp. 12-31-12 CIVIL STATE OF CALIFORNIA

THE STATE OF CALIFORNIA OR ITS OFFICERS OR AGENTS SHALL NOT BE RESPONSIBLE FOR THE ACCURACY OR COMPLETENESS OF SCANNED COPIES OF THIS PLAN SHEET.

1 **REVISED PER ADDENDUM No. 1 DATED NOVEMBER 19, 2012**

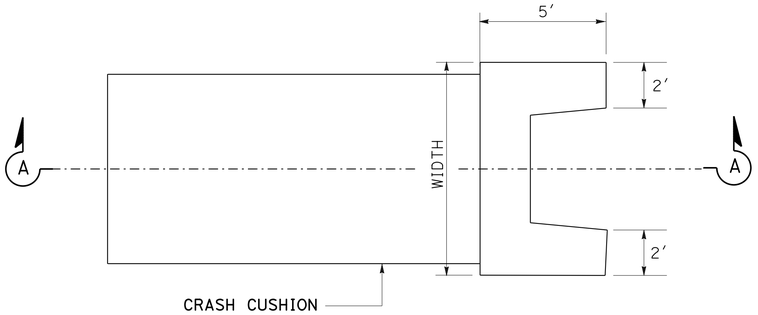

CONCRETE BASE SLAB LAYOUT

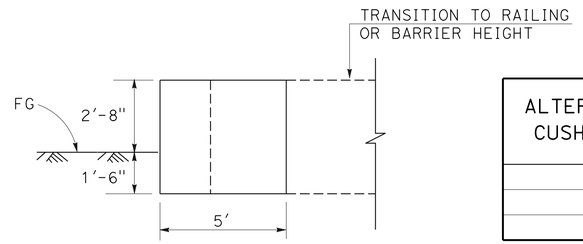

SECTION A-A

ALTERNATIVE CRASH CUSHION (TYPE 2)	WIDTH
A	8'-0"
B	8'-0"
C	7'-6"

CONCRETE TRANSITION TO ALTERNATIVE CRASH CUSHION (TYPE 2)

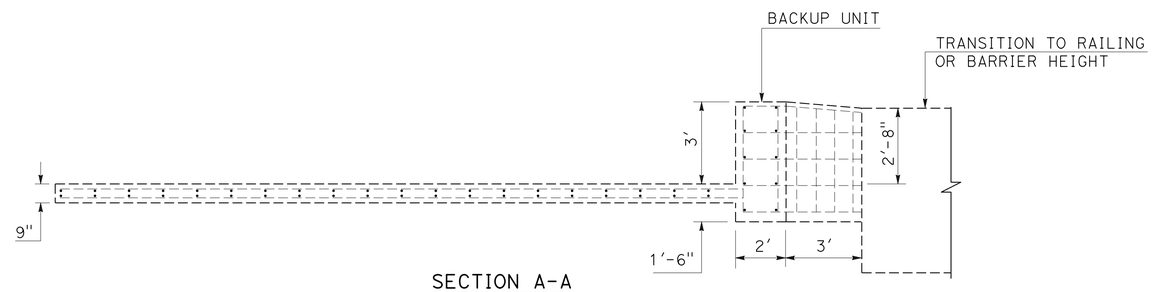

SECTION A-A

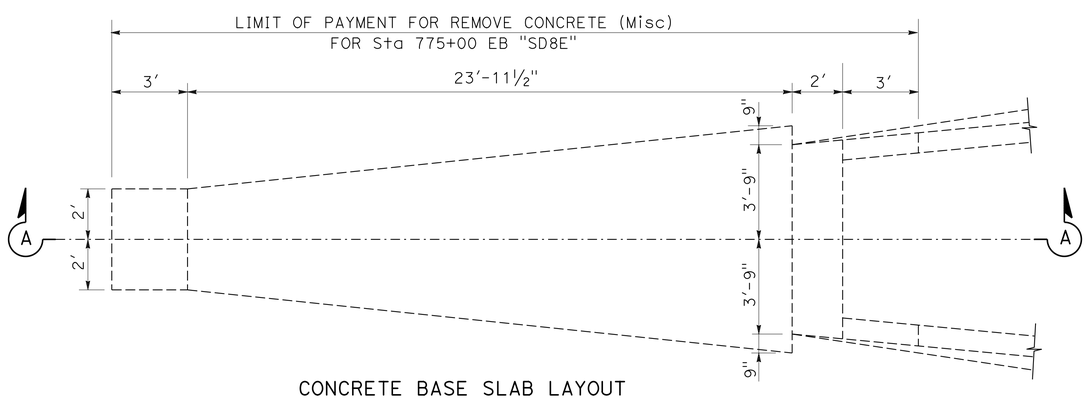

CONCRETE BASE SLAB LAYOUT

REMOVE CONCRETE (Misc)
(CRASH CUSHION BASE SLAB AND BACKUP UNIT)

Sta 755+50 EB "SD8E"

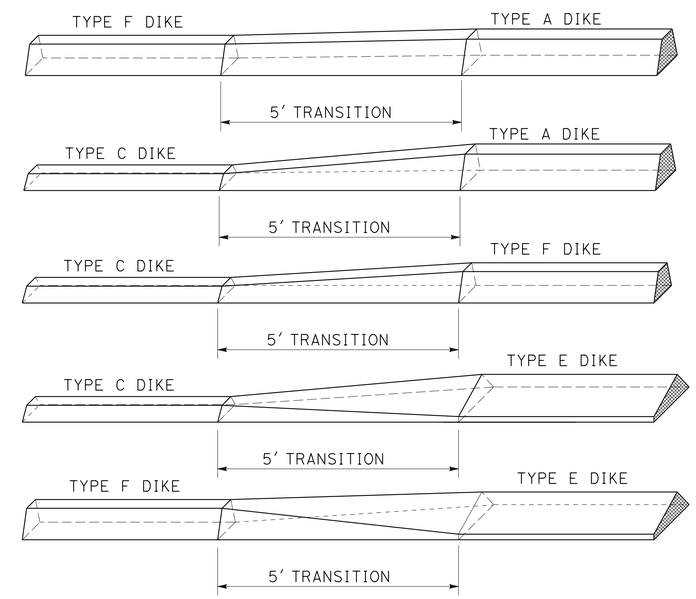

DIKE TRANSITION DETAILS
(ISOMETRIC)

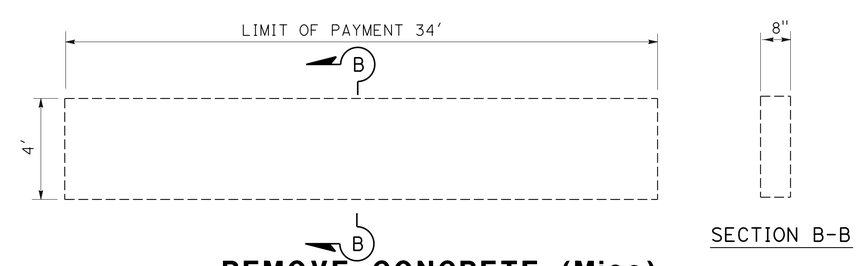

SECTION B-B

REMOVE CONCRETE (Misc)
(CRASH CUSHION BASE SLAB)

Sta 775+00 EB "SD8E"

CONSTRUCTION DETAILS
NO SCALE

C-14

STATE OF CALIFORNIA - DEPARTMENT OF TRANSPORTATION
Caltrans PROJECT DEVELOPMENT
TRAFFIC

FUNCTIONAL SUPERVISOR: RICHARD ESTRADA
CALCULATED-DESIGNED BY: VAN D. CALLANTA
CHECKED BY: MANUEL REYES
REVISED BY
DATE REVISED

LAST REVISION 11-19-12
DATE PLOTTED => 19-NOV-2012
TIME PLOTTED => 09:11

Dist	COUNTY	ROUTE	POST MILES TOTAL PROJECT	SHEET No.	TOTAL SHEETS
11	SD	8	10.5/12.6, R25.7/R26.1	86	136

Manuel Reyes 05-18-12
REGISTERED CIVIL ENGINEER DATE

06-04-12
PLANS APPROVAL DATE

REGISTERED PROFESSIONAL ENGINEER MANUEL REYES No. 58621 Exp. 12-31-12 CIVIL STATE OF CALIFORNIA

THE STATE OF CALIFORNIA OR ITS OFFICERS OR AGENTS SHALL NOT BE RESPONSIBLE FOR THE ACCURACY OR COMPLETENESS OF SCANNED COPIES OF THIS PLAN SHEET.

1 REVISED PER ADDENDUM No. 1 DATED NOVEMBER 19, 2012

1

MISCELLANEOUS WORK

LINE	BEGIN STATION	END STATION	DIRECTION	CLASS 2 AGGREGATE BASE (CY)	REMOVE FENCE (LF)	REMOVE CONCRETE (Misc) (CY)		ROADWAY EXCAVATION (CY)	SLOPE PAVING (CONCRETE) (CY)
						Conc CURB	CRASH CUSHION, Conc BASE AND BACKUP UNIT	REMOVE RAISED ISLAND	
"SD8E"	686+96.00	687+09.88	EB			1.71		6.04	
"RT LANE"	687+09.88	693+05.00	EB			73.45		112.5	
"RT LANE"	689+06.00	690+39.50	EB		133.50				
"SD8E"	702+72.20	703+05.89	EB	1.25					
"R10S"	703+05.89	704+48.50	EB	5.28					
"SD8E"	709+03.20	709+23.00	WB			1.22			
"SD8E"	709+03.20	710+55.80	WB			9.42		10.48	
"SD8E"	709+23.00	710+59.75	WB						6.44
"SD8E"	714+71.00	715+42.00	WB						0.62
"SD8E"	714+79.00	715+05.00	EB						0.23
"SD8E"	755+50.00		EB				7.3		
"SD8E"	761+92.00	762+17.00	EB						0.59
"SD8E"	762+17.00	762+24.47	EB						0.18
"LM3"	762+24.47	762+60.75	EB						0.86
"LM3"	762+60.75	762+96.00	EB						0.84
"SD8E"	775+00.00		EB				3.35		
			SUB-TOTALS	6.52	133.50	85.80	10.65	129.02	9.76
			TOTALS	6.52	133.50	96.45		129.02	9.76

RUMBLE STRIP

LINE	Loc	BEGIN Sta	END Sta	DIRECTION	SHOULDER	RUMBLE STRIP (HMA, GROUND-IN INDENTATIONS) (N) (LF)	RUMBLE STRIP (HMA, GROUND-IN INDENTATIONS) (Sta)	REMARKS
"SD8E"	1	685+00.00	800+23.00	EB/WB	INSIDE	23,046.00	230.46	
"SD8E"		685+00.00	687+09.88	EB	OUTSIDE	209.88	2.10	
"RT LANE"		687+09.88	692+84.00	EB		574.12	5.74	
"SD8E"		688+02.50	697+35.30	WB		932.80	9.33	
		705+79.40	722+69.10	EB		1,689.70	16.90	
		710+07.00	731+17.00	WB		2,110.00	21.10	
		744+41.60	750+82.40	EB		640.80	6.41	
		746+40.80	752+45.60	WB		604.80	6.05	
		764+95.10	772+10.00	EB		714.90	7.15	
		776+54.30	783+28.80	WB		674.50	6.75	
		776+74.70	781+70.00	EB		495.30	4.95	
		785+94.47	798+09.00	WB		1,214.53	12.15	
						TOTAL	329.09	

(N) = NOT A SEPARATE ITEM, FOR INFORMATION ONLY.

SUMMARY OF QUANTITIES
Q-3

REVISED BY | DATE REVISED
VAN D. CALLANTA | MANUEL REYES
CALCULATED-DESIGNED BY | CHECKED BY
FUNCTIONAL SUPERVISOR
RICHARD ESTRADA

STATE OF CALIFORNIA - DEPARTMENT OF TRANSPORTATION
Caltrans TRAFFIC PROJECT DEVELOPMENT

LAST REVISION 11-19-12 | DATE PLOTTED => 19-NOV-2012 | TIME PLOTTED => 09:11

Dist	COUNTY	ROUTE	POST MILES TOTAL PROJECT	SHEET No.	TOTAL SHEETS
11	SD	8	10.5/12.6, R25.7/R26.1	89	136

Manuel Reyes 05-18-12
REGISTERED CIVIL ENGINEER DATE

06-04-12
PLANS APPROVAL DATE

REGISTERED PROFESSIONAL ENGINEER MANUEL REYES No. 58621 Exp. 12-31-12 CIVIL STATE OF CALIFORNIA

THE STATE OF CALIFORNIA OR ITS OFFICERS OR AGENTS SHALL NOT BE RESPONSIBLE FOR THE ACCURACY OR COMPLETENESS OF SCANNED COPIES OF THIS PLAN SHEET.

1 REVISED PER ADDENDUM No. 1 DATED NOVEMBER 19, 2012

1

CONCRETE BARRIER/MINOR CONCRETE

LINE	DIRECTION	BEGIN STATION	END STATION	CONCRETE BARRIER TYPE 60 (LF)	CONCRETE BARRIER TYPE 60C	CONCRETE BARRIER TYPE 60 Mod (LF)	CONCRETE BARRIER TYPE 60D Mod (LF)	CONCRETE BARRIER TYPE 60GE Mod (LF)	MINOR CONCRETE (MINOR STRUCTURE) (CY) ANCHOR BLOCK Mod	MINOR CONCRETE (MINOR STRUCTURE) (CY) ANCHOR BLOCK	HMA (TYPE A) UNDER Conc BARRIER (TON)	TACK COAT (TON)	REMOVE BRIDGE RAILING (N) (CY)	ROADWAY EXCAVATION (TYPE Z-2) (AERIALLY DEPOSITED LEAD) (CY)
"SD8E"	EB	685+89.60	686+00.00						3.00					1.50
"SD8E"	EB	686+00.00	686+95.90	95.90							2.13	0.02		0.16
"SD8E"	EB	686+95.90	687+09.88	13.98							0.31			8.28
"RT LANE"	EB	687+09.88	690+04.50	294.62							6.54	0.06		
"RT LANE"	EB	690+04.50	691+10.30					105.80						
"RT LANE"	EB	691+10.30	691+25.00	14.70							0.33	0.00		
"RT LANE"	EB	691+25.00	692+84.00		159.00									
"SD8E"	EB	702+62.20	702+72.20						3.00					1.50
"SD8E"	EB	702+72.20	703+05.89	33.69							0.75	0.01		2.10
"R10S"	EB	703+05.89	704+48.50	142.61							3.17	0.03		8.80
"R10S"	EB	704+48.50	704+58.50						3.00					1.50
"SD8E"	WB	711+23.00	711+57.57					34.57						5.11
"SD8E"	WB	711+92.90	712+27.90			35.00								
"SD8E"	WB	712+27.90	714+71.00			243.10								
"SD8E"	WB	714+71.00	715+42.00	71.00							1.58	0.01		
"SD8E"	WB	715+42.00	719+82.70			440.70								
"SD8E"	EB	711+34.00	712+15.90				81.90							
"SD8E"	EB	712+15.90	718+55.00	639.10							14.19	0.13		
"SD8E"	WB	720+45.40	720+55.60							1.85				1.50
"SD8E"	EB	732+51.60	732+61.60						1.85					1.50
"EN4"	EB	754+05.40	754+15.40						1.85					1.50
"SD8E"	WB	755+45.40	755+55.40						1.85					1.50
"EN4"	EB	758+40.00	758+50.00						1.85					1.50
"SD8E"	WB	766+85.00	766+95.00						3.00					1.50
"LM3"	EB	770+56.88	770+66.98						3.61					1.50
"CRR"	EB	775+18.40	775+28.40						3.00				1.20	1.50
"SD8E"	EB	776+80.00	777+40.00	60.00										
"SD8E"	EB	777+40.00	781+70.00	430.00							9.55	0.08		
"SD8E"	WB	776+98.70	777+09.00						2.64				1.20	1.50
"SD8E"	EB	1488+64.00	1488+74.00						1.85					1.50
"SD8E"	EB	1488+67.90	1488+77.90						1.85					1.50
"SD8E"	WB	1488+81.60	1488+91.60						1.85					1.50
"SD8E"	WB	1490+53.90	1490+63.90						1.85					1.50
"SD8E"	WB	1490+57.80	1490+67.80						1.85					1.50
			SUB-TOTALS	1,795.60	159.00	718.80	81.90	140.37	37.90	1.85	38.55	0.35		41.51***
			TOTALS	1,795.60	159.00	718.80	81.90	140.37	39.75**		38.55*	0.35*		49.95***

* FOR ADDITIONAL QUANTITIES, SEE HOT MIX ASPHALT DIKE AND PAVEMENT STRUCTURE QUANTITIES TABLES
** FOR ADDITIONAL QUANTITIES, SEE DRAINAGE QUANTITY TABLE
*** FOR ADDITIONAL QUANTITY, SEE METAL BEAM GUARD RAILING/CRASH CUSHION TABLE
(N) = NOT A SEPARATE ITEM, FOR INFORMATION ONLY.

SUMMARY OF QUANTITIES
Q-6

REVISED BY | DATE REVISED
VAN D. CALLANTA | MANUEL REYES
CALCULATED-DESIGNED BY | CHECKED BY
FUNCTIONAL SUPERVISOR: RICHARD ESTRADA
STATE OF CALIFORNIA - DEPARTMENT OF TRANSPORTATION
Caltrans TRAFFIC PROJECT DEVELOPMENT

LAST REVISION 11-19-12 | DATE PLOTTED => 19-NOV-2012 | TIME PLOTTED => 09:11

DIST	COUNTY	ROUTE	POST MILES TOTAL PROJECT	SHEET NO.	TOTAL SHEETS
11	SD	8	10.5/12.6, R25.7/R26.1	129A	136

LICENSED LANDSCAPE ARCHITECT

August 15, 2008
PLANS APPROVAL DATE

The State of California or its officers or agents shall not be responsible for the accuracy or completeness of electronic copies of this plan sheet.

LICENSED LANDSCAPE ARCHITECT — Robert B. Schott 3635 — Signature — 11-04-08 Renewal Date — 08-11-08 Date — STATE OF CALIFORNIA

1

To accompany plans dated 06-04-12

FLEXIBLE SEDIMENT BARRIER SPACING TABLE

SLOPE OF ROADWAY (PERCENT)	0 to 0.9	1 to 1.9	2 to 2.9	3 to 4	5+
INTERVAL BETWEEN BARRIERS	50′	35′	30′	25′	20′
ANGLE FROM FACE OF CURB	70°	70°	70°	45°	45°
SUGGESTED BARRIER LENGTH	6′	6′	6′	6′	6′

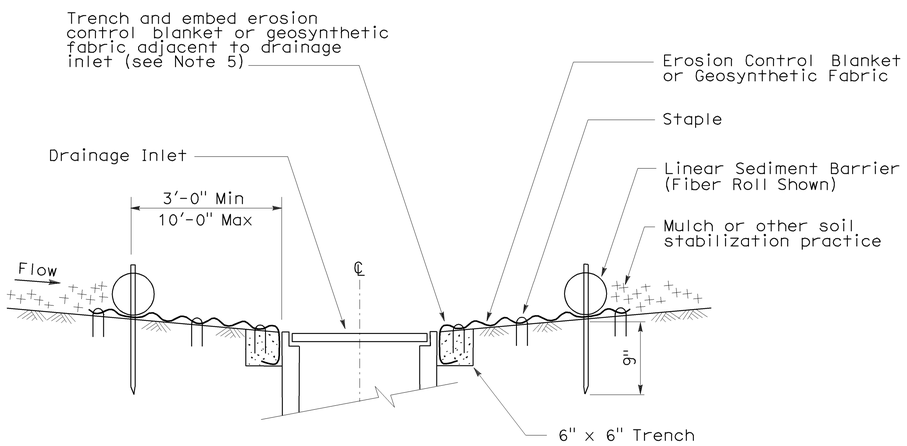

SECTION A-A

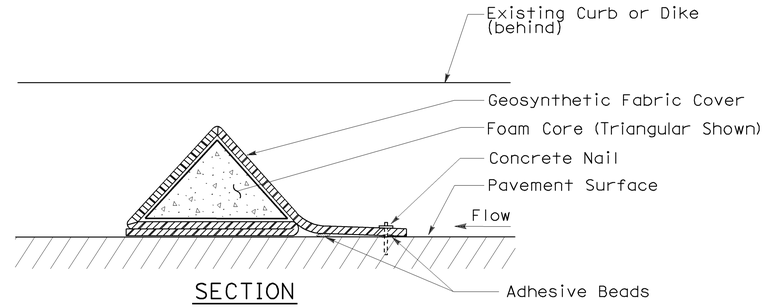

SECTION

FLEXIBLE SEDIMENT BARRIER DETAIL (FOAM BARRIER SHOWN)

NOTES:

1. See Standard Plan T51 for Temporary Silt Fence.
2. Dimensions may vary to fit field conditions.
3. Install a minimum of 3 flexible sediment barriers upstream of each drainage inlet to be protected.
4. Position erosion control blanket or geosynthetic fabric at edge of concrete apron and secure in trench.
5. Erosion control blanket or geosynthetic fabric is not required if the area adjacent to the drainage inlet is vegetated.

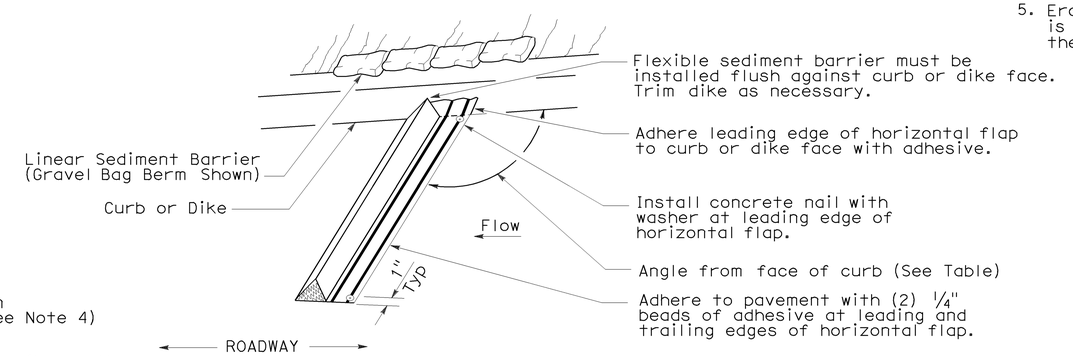

PERSPECTIVE

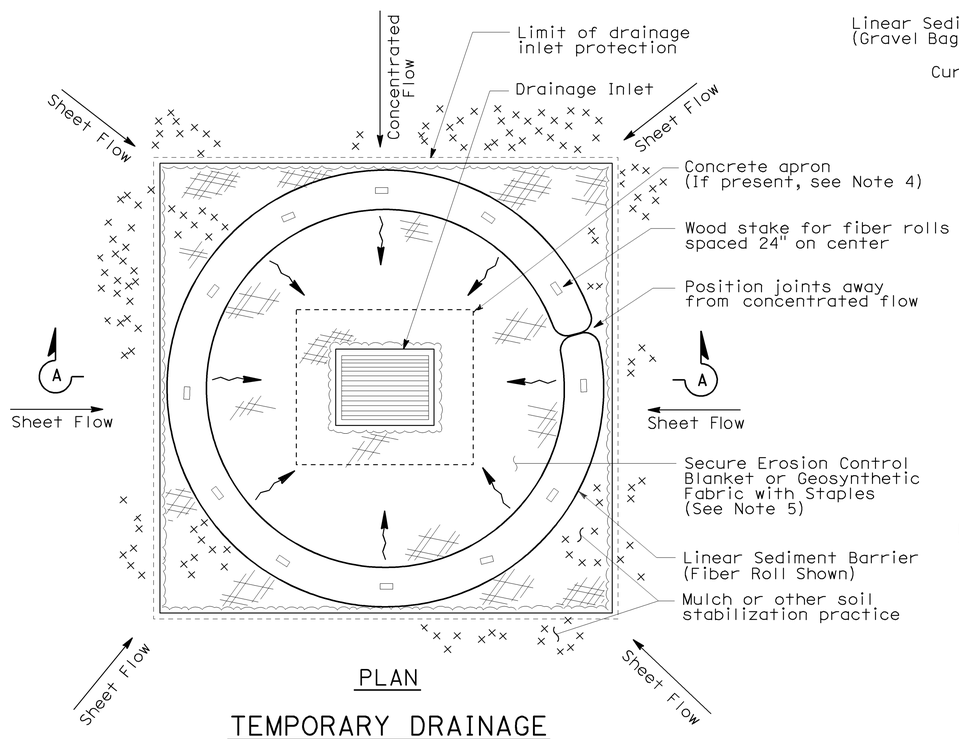

PLAN

TEMPORARY DRAINAGE INLET PROTECTION (TYPE 4A)

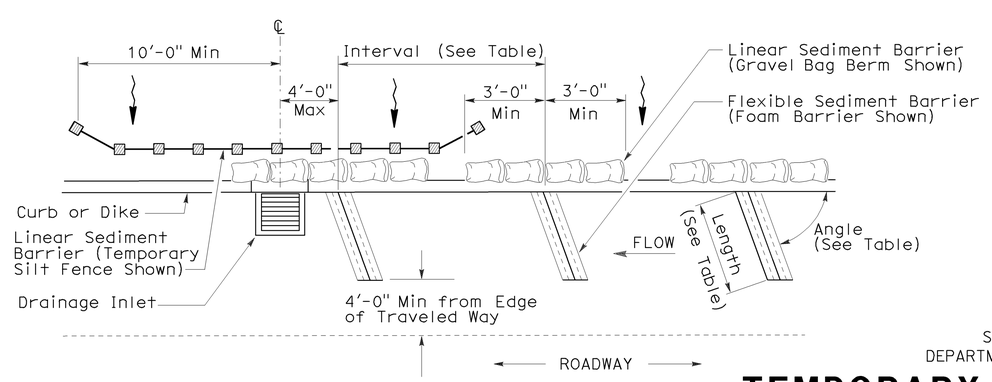

PLAN

TEMPORARY DRAINAGE INLET PROTECTION (TYPE 4B) FLEXIBLE SEDIMENT BARRIER

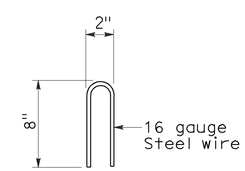

STAPLE DETAIL

STATE OF CALIFORNIA
DEPARTMENT OF TRANSPORTATION

TEMPORARY WATER POLLUTION CONTROL DETAILS (TEMPORARY DRAINAGE INLET PROTECTION)

NO SCALE

NSP T63 DATED AUGUST 15, 2008 SUPPLEMENTS THE STANDARD PLANS BOOK DATED MAY 2006.

1 ADDED PER ADDENDUM No. 1 DATED NOVEMBER 19, 2012

NEW STANDARD PLAN NSP T63

2006 NEW STANDARD PLAN NSP T63

7-11-08