Dist	COUNTY	ROUTE	POST MILES TOTAL PROJECT	SHEET No.	TOTAL SHEETS
11	SD	8	R39.7/R61.5	1	71

ACIM-008-1(309)E

STATE OF CALIFORNIA
DEPARTMENT OF TRANSPORTATION

PROJECT PLANS FOR CONSTRUCTION ON
STATE HIGHWAY

IN SAN DIEGO COUNTY NEAR PINE VALLEY
FROM HORSETHIEF CREEK UNDERCROSSING
TO 0.3 MILE EAST OF CRESTWOOD ROAD UNDERCROSSING

TO BE SUPPLEMENTED BY STANDARD PLANS DATED MAY 2006

INDEX OF PLANS

Sheet No.	Description
1	Title and Location Map
2-3	Typical Cross Sections
4	Project Control
5-22	Construction Details
23-24	Construction Area Signs
25-29	Stage Construction Plans and Quantities
30-31	Traffic Handling Plans
32-35	Pavement Delineation Details and Quantities
36-46	Summary of Quantities
47-69	Revised Standard Plans
TRUCTURE PLANS	
70	General Plan
71	Structure Approach Type R(30S)

THE STANDARD PLANS LIST APPLICABLE TO THIS CONTRACT IS INCLUDED IN THE NOTICE TO BIDDERS AND SPECIAL PROVISIONS BOOK.

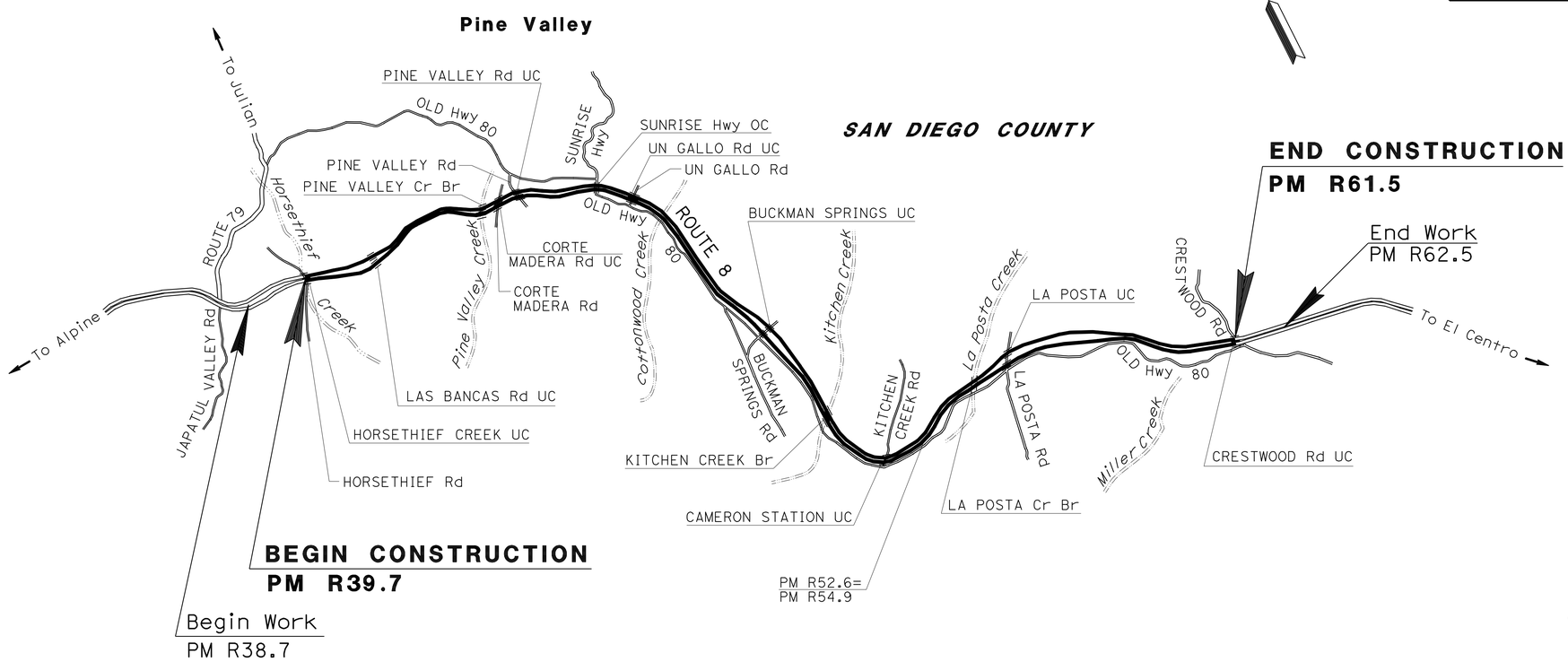

NO SCALE

THE CONTRACTOR SHALL POSSESS THE CLASS (OR CLASSES) OF LICENSE AS SPECIFIED IN THE "NOTICE TO BIDDERS."

Thomas M. Guerrini 01-07-11
PROJECT ENGINEER DATE
REGISTERED CIVIL ENGINEER

January 18, 2011
PLANS APPROVAL DATE

REGISTERED PROFESSIONAL ENGINEER
THOMAS M. GUERRINI
No. C65539
Exp. 09-30-11
CIVIL
STATE OF CALIFORNIA

THE STATE OF CALIFORNIA OR ITS OFFICERS OR AGENTS SHALL NOT BE RESPONSIBLE FOR THE ACCURACY OR COMPLETENESS OF SCANNED COPIES OF THIS PLAN SHEET.

PROJECT MANAGER: BRUCE LAMBERT
DESIGN ENGINEER: TOM GUERRINI

CONTRACT No.	11-2M1604
PROJECT ID	1100020035

LAST REVISION 01-10-11
DATE PLOTTED => 07-FEB-2011
TIME PLOTTED => 16:01

Dist	COUNTY	ROUTE	POST MILES TOTAL PROJECT	SHEET No.	TOTAL SHEETS
11	SD	8	R39.7/R61.5	2	71

Thomas M. Guerrini 01-07-11
REGISTERED CIVIL ENGINEER DATE

01-18-11
PLANS APPROVAL DATE

REGISTERED PROFESSIONAL ENGINEER THOMAS M. GUERRINI No. C65539 Exp. 09-30-11 CIVIL STATE OF CALIFORNIA

THE STATE OF CALIFORNIA OR ITS OFFICERS OR AGENTS SHALL NOT BE RESPONSIBLE FOR THE ACCURACY OR COMPLETENESS OF SCANNED COPIES OF THIS PLAN SHEET.

NOTES:

1. DIMENSIONS OF THE PAVEMENT STRUCTURAL SECTIONS ARE SUBJECT TO TOLERANCES SPECIFIED IN THE STANDARD SPECIFICATIONS.
2. SUPERELEVATION AS SHOWN OR AS DIRECTED BY THE ENGINEER.
3. EXISTING UTILITY FACILITIES HAVE NOT BEEN PLOTTED ON THESE PLANS.
4. FOG SEAL COAT SHALL BE APPLIED TO ALL HMA SURFACES EXCEPT TRAVELED WAYS.
5. FOR LOCATION AND TYPE OF REMOVE HMA DIKE/PLACE HMA DIKE, SEE SUMMARY OF QUANTITIES SHEETS.
6. SEE DETAIL "A" BELOW AND SUMMARY OF QUANTITIES FOR REPLACE CONCRETE PAVEMENT WORK AND QUANTITIES.
7. SEE CONSTRUCTION DETAILS SHEET FOR LOCATION OF "WEIGHT IN MOTION" SYSTEM.
8. END GRIND Conc PAVEMENT AT PM R61.3 IN EB DIRECTION.

ABBREVIATIONS:

ESA - ENVIRONMENTALLY SENSITIVE AREA
RSC - RAPID STRENGTH CONCRETE

DESIGN DESIGNATION (Rte-8)

ADT(2010)	22,300	D=51.7 %
ADT(2020)	24,800	T=13.6 %
DHV	3,100	V=70 MPH

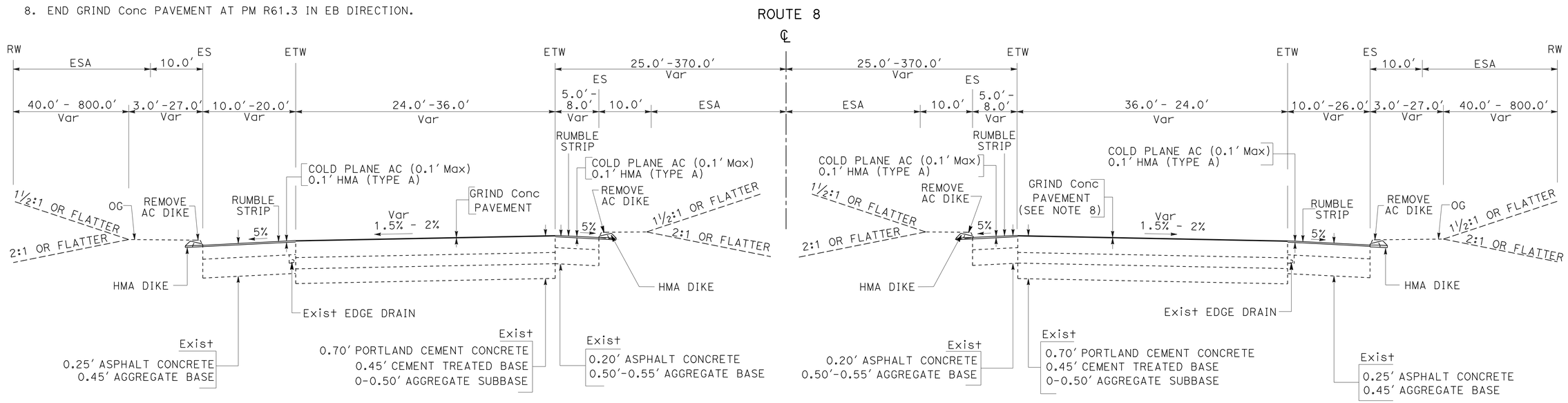

WESTBOUND
PM R39.7 - PM R61.5*

EASTBOUND
PM R39.7 - PM R61.5*

ROUTE 8

* SEE X-2 FOR TYPICAL SECTION FOR ROADWAY PROFILE RESTORATION WORK NEAR KITCHEN CREEK BRIDGE.

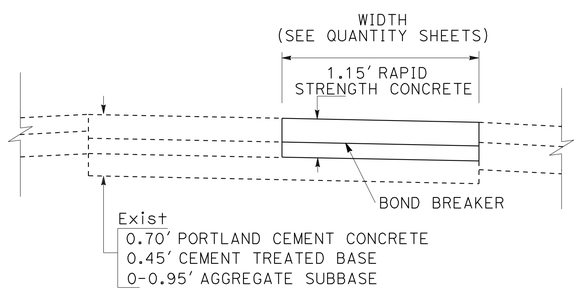

TYPICAL SLAB REPLACEMENT (DETAIL A)

NOTE: SEE 2006 REVISED STANDARD PLANS P8 AND P10.

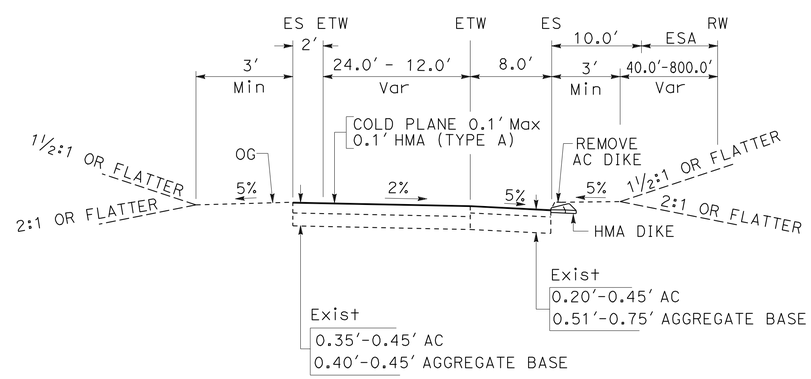

RAMPS

TYPICAL CROSS SECTIONS

NO SCALE

X-1

REVISED BY | DATE REVISED
PHOUKHAO SASINOUAN | TOM GUERRINI
CALCULATED-DESIGNED BY | CHECKED BY
FUNCTIONAL SUPERVISOR | ED HAJJ
STATE OF CALIFORNIA - DEPARTMENT OF TRANSPORTATION | DESIGN
Caltrans

LAST REVISION 01-11-11 | DATE PLOTTED => 07-FEB-2011 | TIME PLOTTED => 16:01

Dist	COUNTY	ROUTE	POST MILES TOTAL PROJECT	SHEET No.	TOTAL SHEETS
11	SD	8	R39.7/R61.5	3	71

Thomas M. Guerrini 01-07-11
REGISTERED CIVIL ENGINEER DATE

01-18-11
PLANS APPROVAL DATE

REGISTERED PROFESSIONAL ENGINEER THOMAS M. GUERRINI No. C65539 Exp. 09-30-11 CIVIL STATE OF CALIFORNIA

THE STATE OF CALIFORNIA OR ITS OFFICERS OR AGENTS SHALL NOT BE RESPONSIBLE FOR THE ACCURACY OR COMPLETENESS OF SCANNED COPIES OF THIS PLAN SHEET.

NOTE:

1. REMOVE ENTIRE CTB LAYER AND GRADE TO BOTTOM OF 0.45' HMA (TYPE A) LAYER

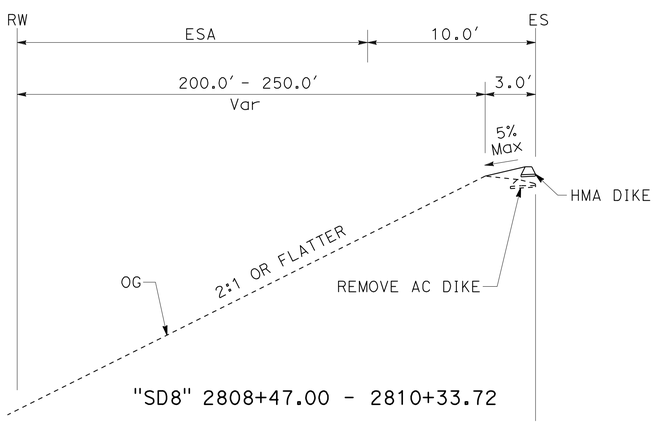

"SD8" 2808+47.00 - 2810+33.72

ROUTE 8

"SD8" LINE

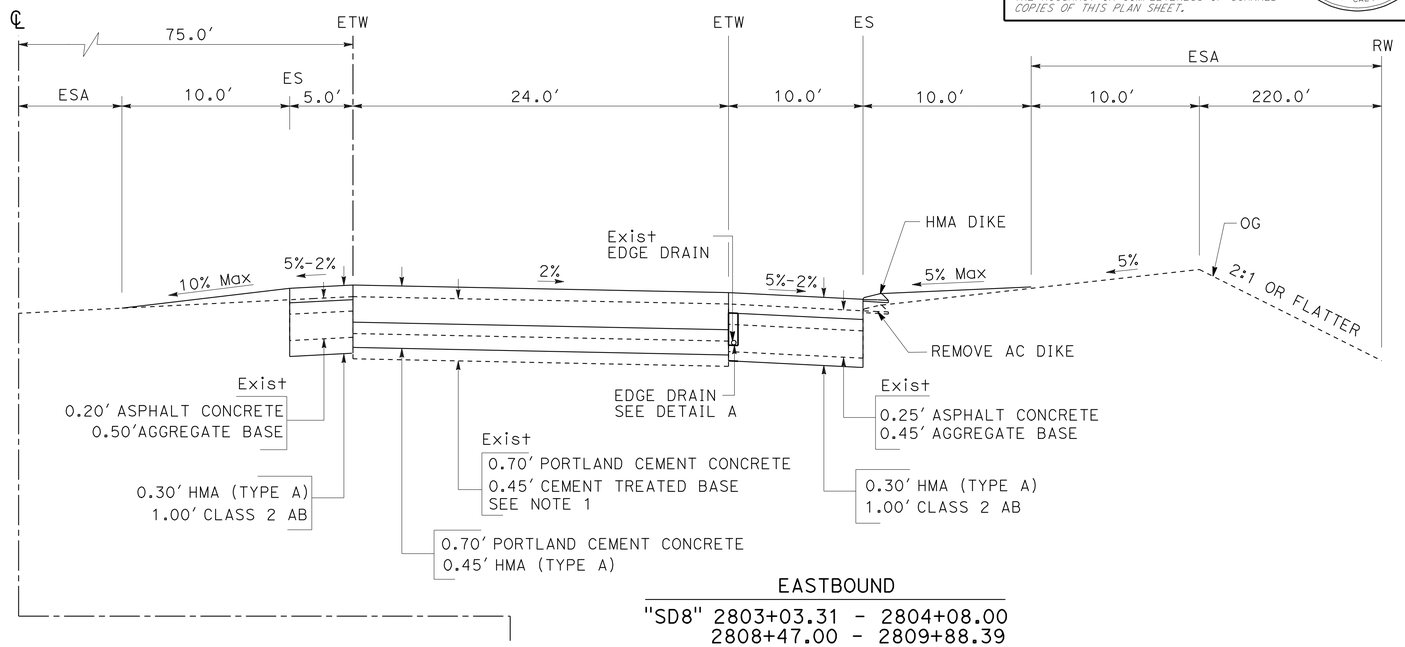

EASTBOUND

"SD8" 2803+03.31 - 2804+08.00
2808+47.00 - 2809+88.39

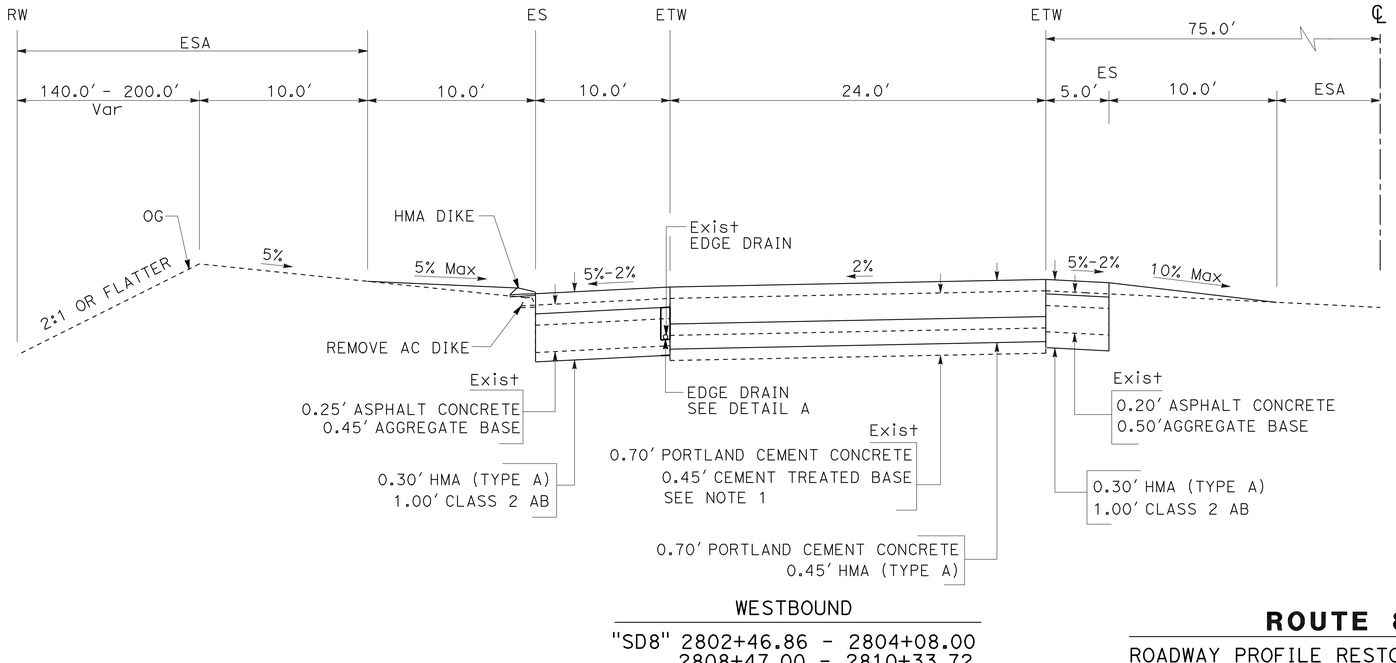

WESTBOUND

"SD8" 2802+46.86 - 2804+08.00
2808+47.00 - 2810+33.72

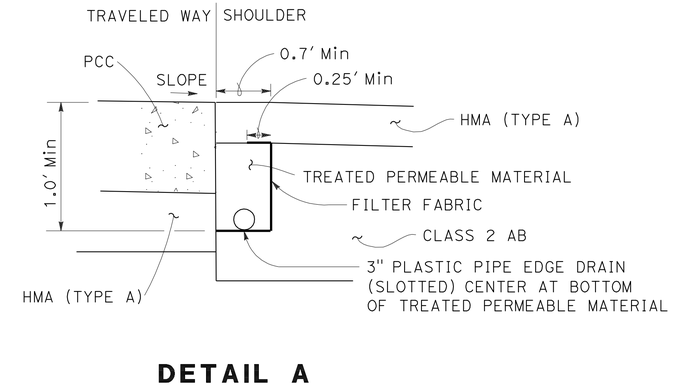

DETAIL A

EDGE DRAIN

ROUTE 8

ROADWAY PROFILE RESTORATION WORK
NEAR KITCHEN CREEK BRIDGE
(SEE CONSTRUCTION DETAIL SHEETS)

TYPICAL CROSS SECTIONS

NO SCALE

X-2

STATE OF CALIFORNIA - DEPARTMENT OF TRANSPORTATION
Caltrans®
DESIGN

FUNCTIONAL SUPERVISOR: ED HAJJ
CALCULATED-DESIGNED BY: PHOUKHAO SASINOUAN
CHECKED BY: TOM GUERRINI
REVISED BY
DATE REVISED

LAST REVISION 01-11-11
DATE PLOTTED => 07-FEB-2011
TIME PLOTTED => 16:01

Dist	COUNTY	ROUTE	POST MILES TOTAL PROJECT	SHEET No.	TOTAL SHEETS
11	SD	8	R39.7/R61.5	4	71

Wayne G. Strong 01-10-11
PROFESSIONAL LAND SURVEYOR DATE

01-18-11
PLANS APPROVAL DATE

PROFESSIONAL LAND SURVEYOR WAYNE GLEN STRONG No. L.S. 5024 Exp. 12/31/2011 CIVIL STATE OF CALIFORNIA

THE STATE OF CALIFORNIA OR ITS OFFICERS OR AGENTS SHALL NOT BE RESPONSIBLE FOR THE ACCURACY OR COMPLETENESS OF SCANNED COPIES OF THIS PLAN SHEET.

NOTES:

1. CONTACT DISTRICT 11 OFFICE OF LAND SURVEYS, PHONE (858) 467-4305, FOR ADDITIONAL INFORMATION OR QUERIES REGARDING THIS SURVEY PROJECT CONTROL.
2. BASIS OF BEARINGS AND COORDINATES
   FOR THIS PROJECT IS THE CALIFORNIA COORDINATE SYSTEM OF 1983, HPGN EPOCH ADJUSTMENT [CCS 83 (1991.35)], ZONE 6. 3RD ORDER PROJECT CONTROL STATIONS WERE ESTABLISHED IN MAY 2010 BASED ON THE CRITERIA SET FORTH IN THE FEDERAL GEODETIC CONTROL SUBCOMMITTEE'S "GEOMETRIC GEODETIC ACCURACY STANDARDS AND SPECIFICATIONS FOR USING GPS RELATIVE POSITIONING TECHNIQUES" REPRINTED AUGUST 1, 1989.

   THIS GPS SURVEY WAS CONSTRAINED TO CALTRANS 1ST ORDER STATION "8-52.0", AND CALTRANS 2ND ORDER STATION "8-44.9", PER THE ABOVE-REFERENCED STANDARDS.
3. BASIS OF ELEVATIONS
   FOR THIS PROJECT IS THE NORTH AMERICAN VERTICAL DATUM OF 1988 (NAVD 88). ELEVATIONS WERE ESTABLISHED BY GPS, RTK METHODS CONSTRAINING TO 2ND ORDER VERTICAL STATIONS "8-52.0" AND "8-44.9".
4. IN THE EVENT GPS MACHINE CONTROL/GUIDANCE IS USED FOR THIS PROJECT, THE CONTRACTOR SHALL CONTACT AND MEET WITH DISTRICT 11 OFFICE OF LAND SURVEYS TO OBTAIN CONTROL NECESSARY TO ESTABLISH A PROJECT CALIBRATION COMPATIBLE FOR ALL USERS.

ABBREVIATIONS:

CADT - CALIFORNIA DEPARTMENT OF TRANSPORTATION
CAL DOT - CALIFORNIA DEPARTMENT OF TRANSPORTATION
HPGN - HIGH PRECISION GEODETIC NETWORK
RTK - REAL TIME KINEMATIC

LEGEND:

(1) 1ST ORDER STATION
(2) 2nd ORDER STATION
(3) 3RD ORDER STATION

CONTROL FOR DESIGN AND CONSTRUCTION

STATION DESIGNATION	ORDER	NORTHING	EASTING	ELEVATION	DESCRIPTION
8-52.0	1ST	1,840,726.54	6,493,539.81	3231.46	2¼" CADT BRASS DISK IN BOULDER
8-44.9	2ND	1,875,118.32	6,481,652.88	4089.39	2¼" CADT BRASS DISK IN BRIDGE DECK
8 50.64	3RD	1,847,377.25	6,490,871.47	3185.96	1" IRON PIPE WITH "CAL DOT" PLUG
8 50.72	3RD	1,846,920.57	6,491,055.06	3199.87	1" IRON PIPE WITH "CAL DOT" PLUG
8 50.90	3RD	1,845,519.78	6,490,834.62	3273.58	1" IRON PIPE WITH "CAL DOT" PLUG

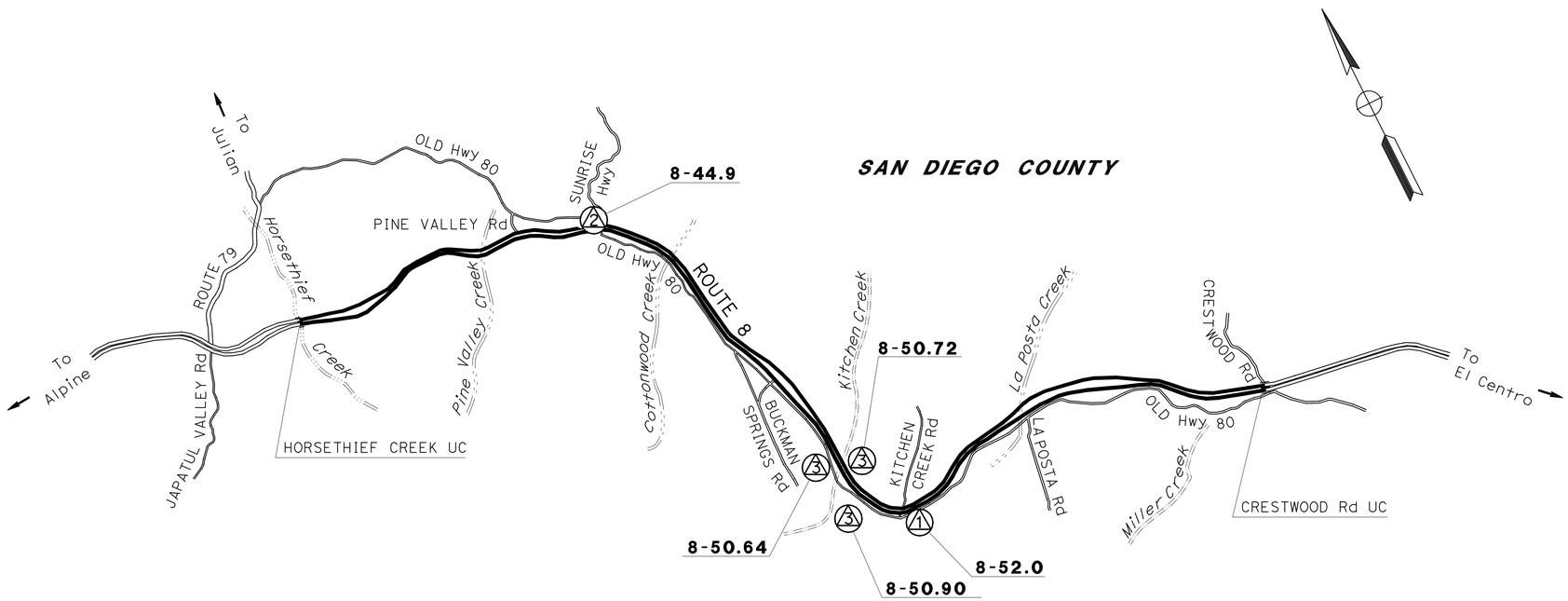

THIS PLAN ACCURATE FOR PROJECT CONTROL INFORMATION ONLY

PROJECT CONTROL

NO SCALE

PC-1

STATE OF CALIFORNIA - DEPARTMENT OF TRANSPORTATION
Caltrans® OFFICE OF LAND SURVEYS

FUNCTIONAL SUPERVISOR: BRUCE URQUHART
CALCULATED-DESIGNED BY: WAYNE STRONG
CHECKED BY: NED SALMAN
REVISED BY
DATE REVISED

LAST REVISION 01-14-11
DATE PLOTTED => 07-FEB-2011
TIME PLOTTED => 16:01

Dist	COUNTY	ROUTE	POST MILES TOTAL PROJECT	SHEET No.	TOTAL SHEETS
11	SD	8	R39.7/R61.5	5	71

Thomas M. Guerrini 01-07-11
REGISTERED CIVIL ENGINEER DATE

01-18-11
PLANS APPROVAL DATE

REGISTERED PROFESSIONAL ENGINEER THOMAS M. GUERRINI No. 65539 Exp. 09-30-11 CIVIL STATE OF CALIFORNIA

THE STATE OF CALIFORNIA OR ITS OFFICERS OR AGENTS SHALL NOT BE RESPONSIBLE FOR THE ACCURACY OR COMPLETENESS OF SCANNED COPIES OF THIS PLAN SHEET.

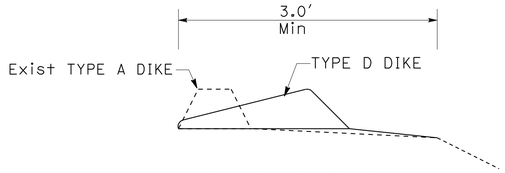

TYPE D REPLACES TYPE A
(LOCATIONS WITH Approx 3′ HINGE)

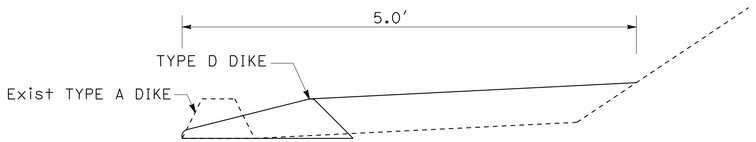

TYPE D REPLACES TYPE A
WB PM 60.61- 60.65

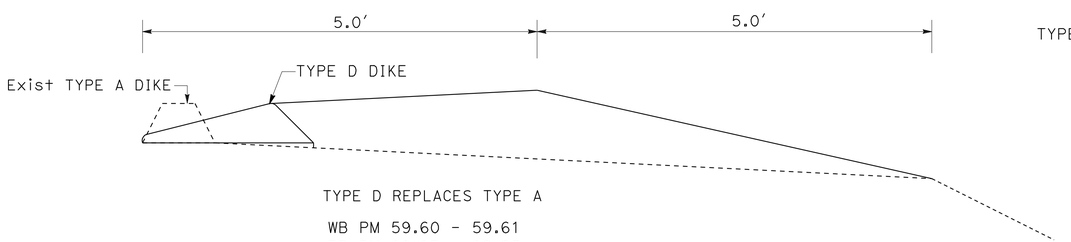

TYPE D REPLACES TYPE A

WB PM 59.60 - 59.61
EB PM 60.83 - 60.85
EB PM 60.88 - 60.90

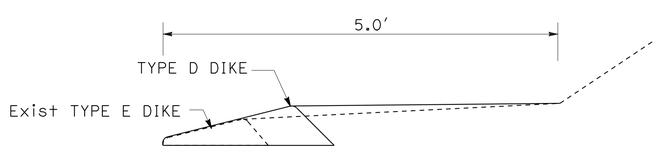

TYPE D REPLACES TYPE E

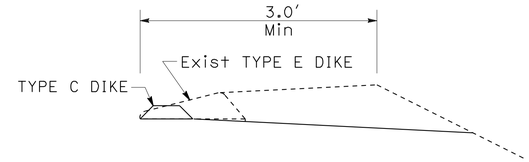

TYPE C REPLACES TYPE E

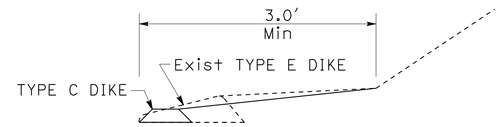

TYPE C REPLACES TYPE E

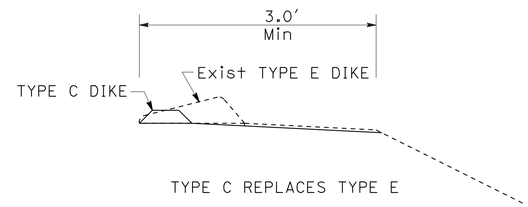

TYPE C REPLACES TYPE E

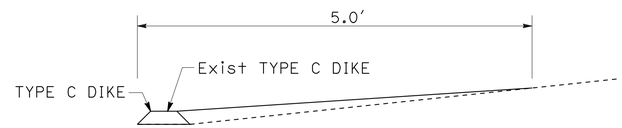

TYPE C REPLACES TYPE C
EB PM R41.64 - PM R41.69

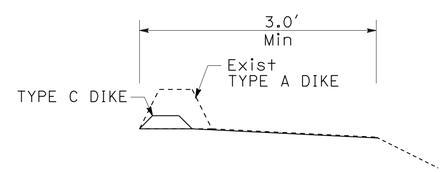

TYPE C REPLACES TYPE A

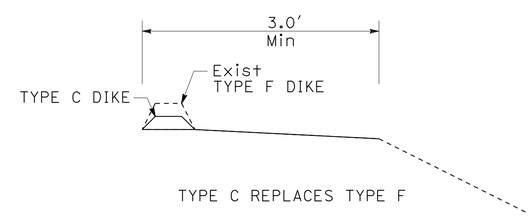

TYPE C REPLACES TYPE F

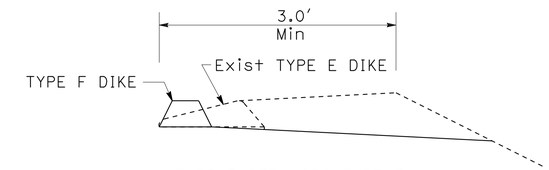

TYPE F REPLACES TYPE E

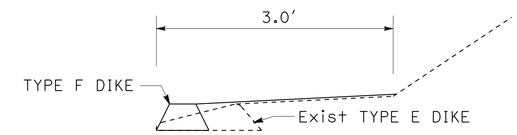

TYPE F REPLACES TYPE E

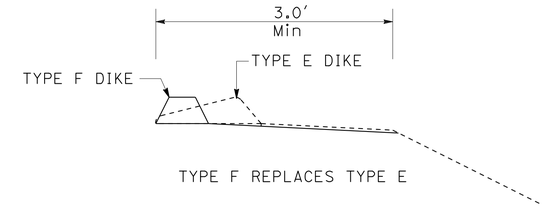

TYPE F REPLACES TYPE E

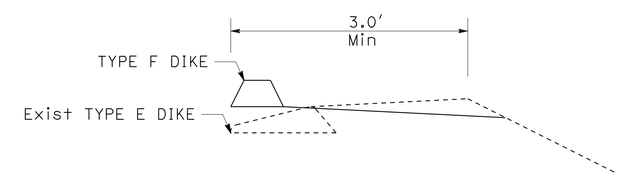

TYPE F REPLACES TYPE E
WB "SD8"
Sta 2808+62 TO Sta 2811+75

DIKE REPLACEMENT

CONSTRUCTION DETAILS

NO SCALE

C-1

STATE OF CALIFORNIA - DEPARTMENT OF TRANSPORTATION
Caltrans
DESIGN

FUNCTIONAL SUPERVISOR: ED HAJJ
CALCULATED-DESIGNED BY: PHOUKHAO SASINOUAN
CHECKED BY: YUSUF RAHMAN
REVISED BY
DATE REVISED

LAST REVISION 01-11-11
DATE PLOTTED => 07-FEB-2011
TIME PLOTTED => 16:01

Dist	COUNTY	ROUTE	POST MILES TOTAL PROJECT	SHEET No.	TOTAL SHEETS
11	SD	8	R39.7/R61.5	6	71

Thomas M. Guerrini 01-07-11
REGISTERED CIVIL ENGINEER DATE

01-18-11
PLANS APPROVAL DATE

REGISTERED PROFESSIONAL ENGINEER
THOMAS M. GUERRINI
No. 65539
Exp. 09-30-11
CIVIL
STATE OF CALIFORNIA

THE STATE OF CALIFORNIA OR ITS OFFICERS OR AGENTS SHALL NOT BE RESPONSIBLE FOR THE ACCURACY OR COMPLETENESS OF SCANNED COPIES OF THIS PLAN SHEET.

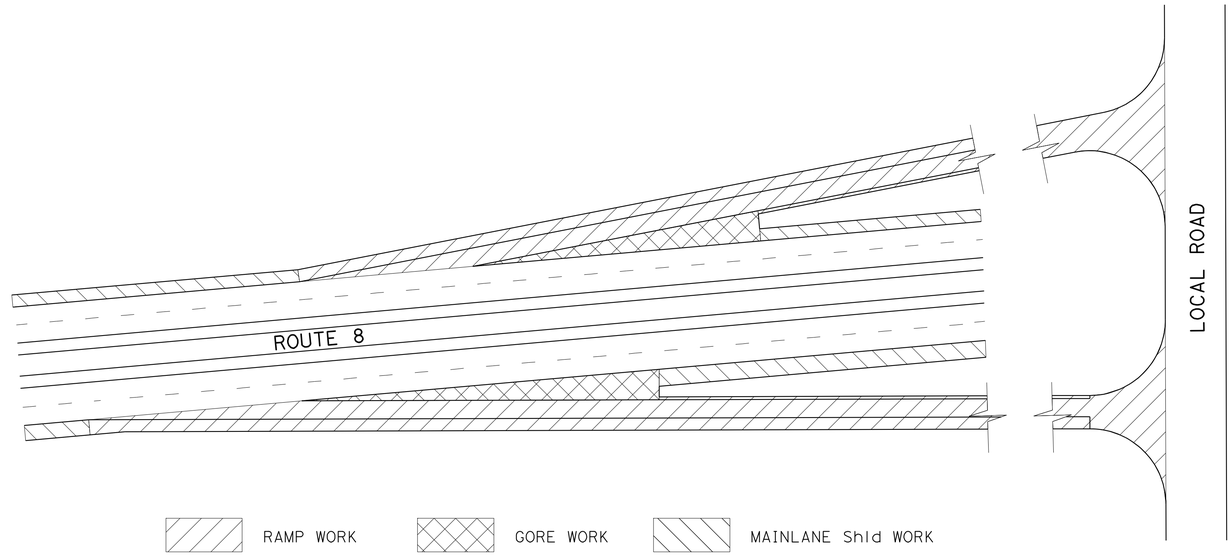

TYPICAL LIMITS OF COLD PLANE AND OVERLAY WORK AT RAMPS

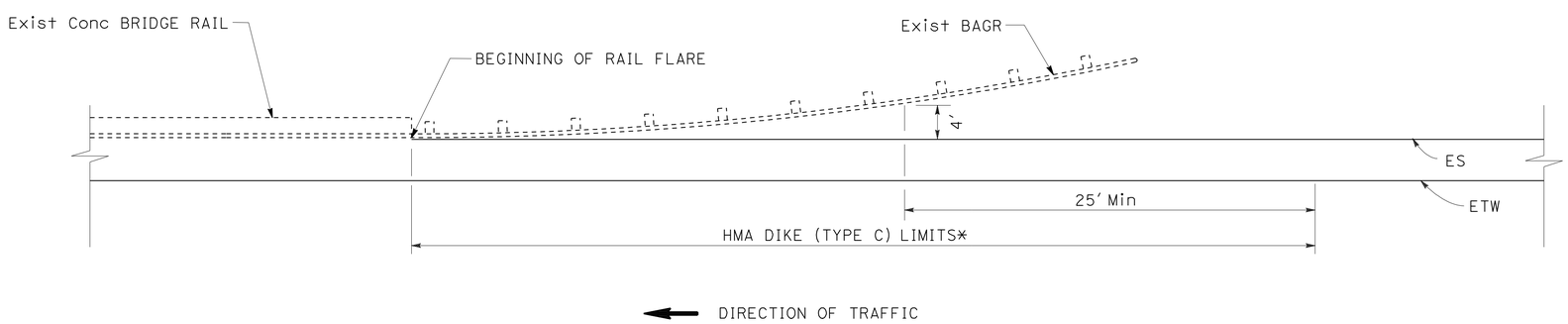

TYPICAL HMA DIKE (TYPE C) LIMITS AT EXISTING BAGR LOCATIONS

*ONLY PLACE DIKE WHERE THERE IS EXISTING DIKE
SEE QUANTITY SHEETS

CONSTRUCTION DETAILS

NO SCALE

C-2

STATE OF CALIFORNIA - DEPARTMENT OF TRANSPORTATION
Caltrans
DESIGN

FUNCTIONAL SUPERVISOR: ED HAJJ
CALCULATED-DESIGNED BY: ANH NGUYET
CHECKED BY: TOM GUERRINI
REVISED BY
DATE REVISED

LAST REVISION 01-11-11
DATE PLOTTED => 07-FEB-2011
TIME PLOTTED => 16:01

Dist	COUNTY	ROUTE	POST MILES TOTAL PROJECT	SHEET No.	TOTAL SHEETS
11	SD	8	R39.7/R61.5	7	71

Thomas M. Guerrini 01-07-11
REGISTERED CIVIL ENGINEER DATE

01-18-11
PLANS APPROVAL DATE

REGISTERED PROFESSIONAL ENGINEER
THOMAS M. GUERRINI
No. C65539
Exp. 09-30-11
CIVIL
STATE OF CALIFORNIA

THE STATE OF CALIFORNIA OR ITS OFFICERS OR AGENTS SHALL NOT BE RESPONSIBLE FOR THE ACCURACY OR COMPLETENESS OF SCANNED COPIES OF THIS PLAN SHEET.

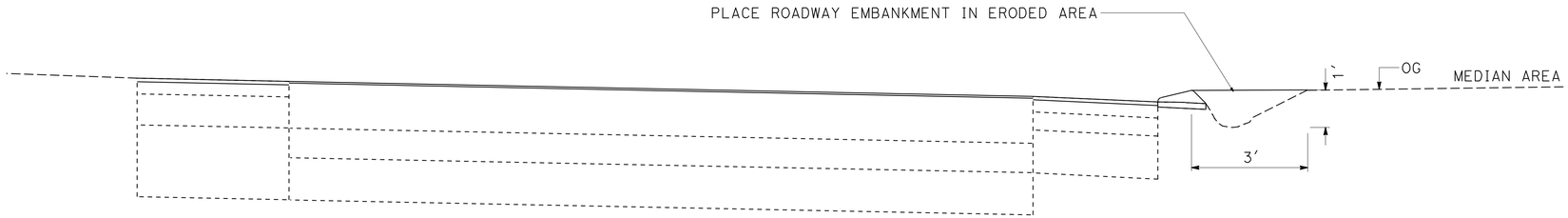

WESTBOUND ROUTE 8
PM R45.9 - R46.2

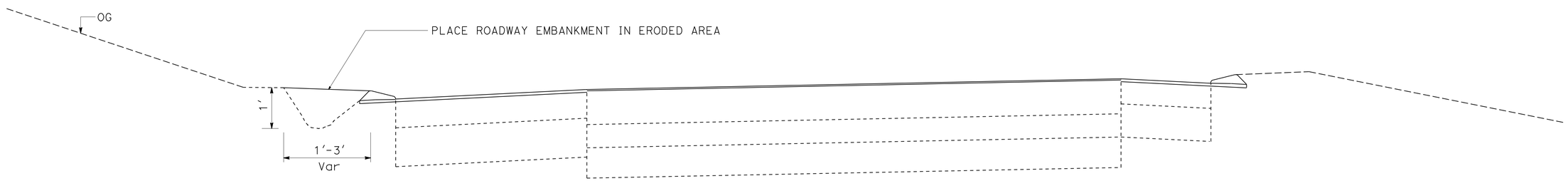

WESTBOUND ROUTE 8
PM R46.4 - R46.6
PM R46.7 - R46.8

ROADWAY EMBANKMENT AT ERODED AREAS

CONSTRUCTION DETAILS

NO SCALE

C-3

REVISED BY | DATE REVISED
TOM GUERRINI | YUSUF RAHMAN
CALCULATED-DESIGNED BY | CHECKED BY
FUNCTIONAL SUPERVISOR
ED HAJJ

STATE OF CALIFORNIA - DEPARTMENT OF TRANSPORTATION
Caltrans
DESIGN

LAST REVISION 01-11-11 | DATE PLOTTED => 07-FEB-2011 | TIME PLOTTED => 16:01

Dist	COUNTY	ROUTE	POST MILES TOTAL PROJECT	SHEET No.	TOTAL SHEETS
11	SD	8	R39.7/R61.5	8	71

Thomas M. Guerrini 01-07-11
REGISTERED CIVIL ENGINEER DATE

01-18-11
PLANS APPROVAL DATE

REGISTERED PROFESSIONAL ENGINEER
THOMAS M. GUERRINI
No. 65539
Exp. 09-30-11
CIVIL
STATE OF CALIFORNIA

THE STATE OF CALIFORNIA OR ITS OFFICERS OR AGENTS SHALL NOT BE RESPONSIBLE FOR THE ACCURACY OR COMPLETENESS OF SCANNED COPIES OF THIS PLAN SHEET.

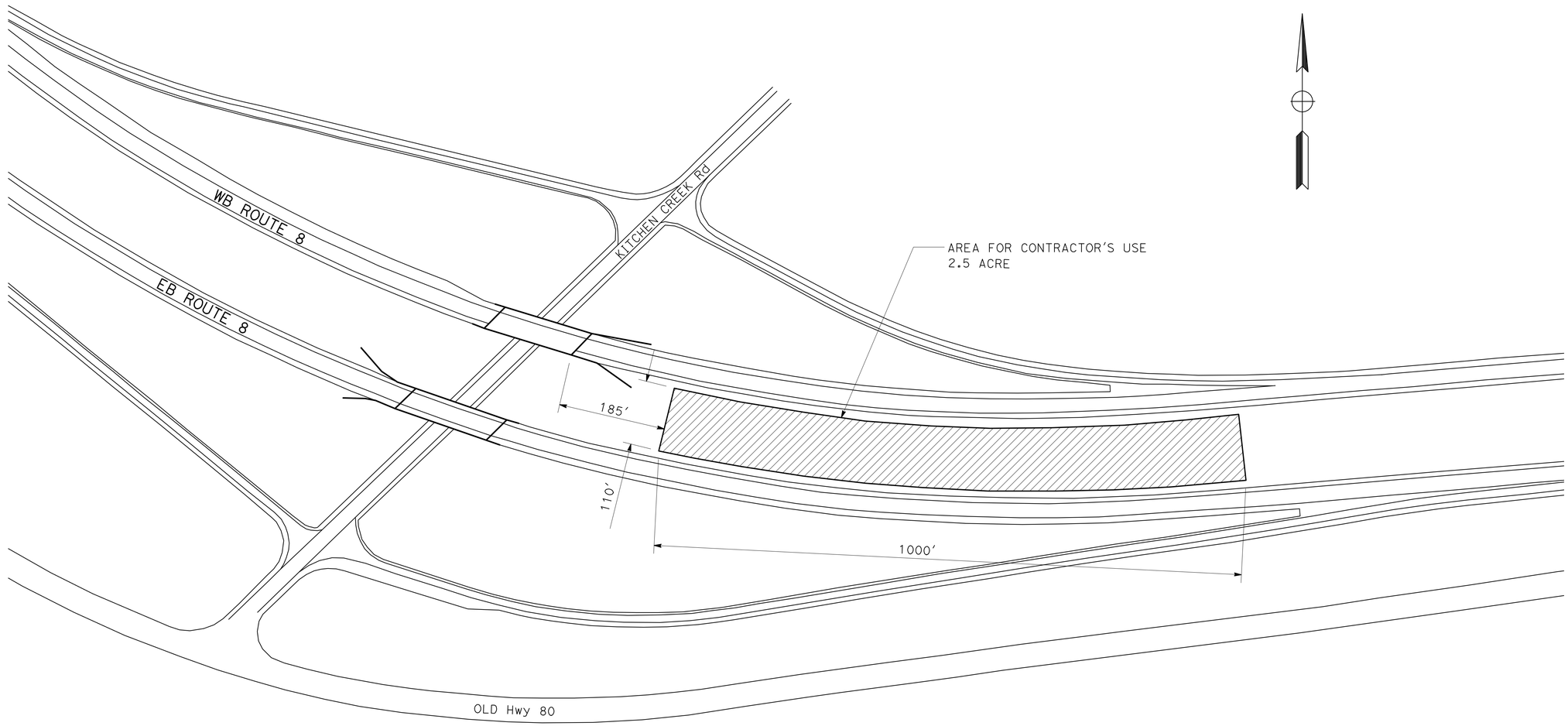

AREA FOR CONTRACTOR'S USE

CONSTRUCTION DETAILS

NO SCALE

C-4

STATE OF CALIFORNIA - DEPARTMENT OF TRANSPORTATION
Caltrans
DESIGN

FUNCTIONAL SUPERVISOR: ED HAJJ
CALCULATED-DESIGNED BY: TOM GUERRINI
CHECKED BY: YUSUF RAHMAN
REVISED BY
DATE REVISED

LAST REVISION 01-14-11
DATE PLOTTED => 07-FEB-2011
TIME PLOTTED => 16:01

Dist	COUNTY	ROUTE	POST MILES TOTAL PROJECT	SHEET No.	TOTAL SHEETS
11	SD	8	R39.7/R61.5	9	71

Thomas M. Guerrini 01-07-11
REGISTERED CIVIL ENGINEER DATE

01-18-11
PLANS APPROVAL DATE

REGISTERED PROFESSIONAL ENGINEER
THOMAS M. GUERRINI
No. 65539
Exp. 09-30-11
CIVIL
STATE OF CALIFORNIA

THE STATE OF CALIFORNIA OR ITS OFFICERS OR AGENTS SHALL NOT BE RESPONSIBLE FOR THE ACCURACY OR COMPLETENESS OF SCANNED COPIES OF THIS PLAN SHEET.

NOTE:

- NO JOINT SEAL WORK WITHIN THE HATCH AREA.

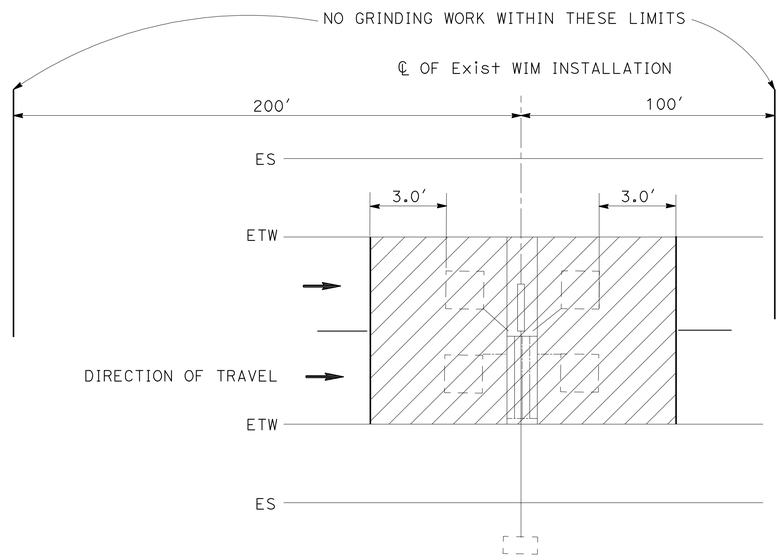

Exist WEIGH IN MOTION SYSTEM (WIM)

ROUTE 8

POST MILE R51.4

EB DIRECTION IS SHOWN
WB DIRECTION IS SIMILAR

CONSTRUCTION DETAILS

NO SCALE

C-5

STATE OF CALIFORNIA - DEPARTMENT OF TRANSPORTATION
Caltrans
DESIGN

FUNCTIONAL SUPERVISOR: ED HAJJ

CALCULATED-DESIGNED BY: MAHENDRA NIRMAL
CHECKED BY: ENRIQUE BERNAL

REVISED BY
DATE REVISED

LAST REVISION 01-11-11
DATE PLOTTED => 07-FEB-2011
TIME PLOTTED => 16:01

Dist	COUNTY	ROUTE	POST MILES TOTAL PROJECT	SHEET No.	TOTAL SHEETS
11	SD	8	R39.7/R61.5	10	71

Thomas M. Guerrini 01-07-11
REGISTERED CIVIL ENGINEER DATE

01-18-11
PLANS APPROVAL DATE

REGISTERED PROFESSIONAL ENGINEER
THOMAS M. GUERRINI
No. 65539
Exp. 09-30-11
CIVIL
STATE OF CALIFORNIA

THE STATE OF CALIFORNIA OR ITS OFFICERS OR AGENTS SHALL NOT BE RESPONSIBLE FOR THE ACCURACY OR COMPLETENESS OF SCANNED COPIES OF THIS PLAN SHEET.

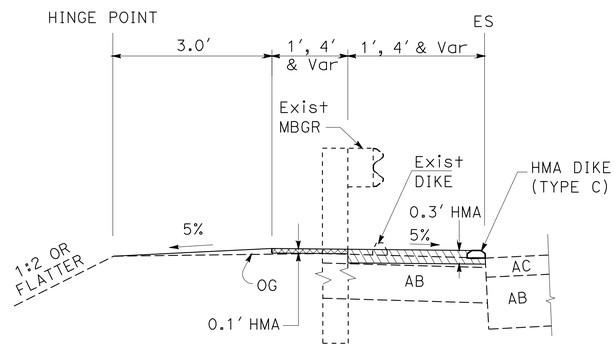

SECTION A-A

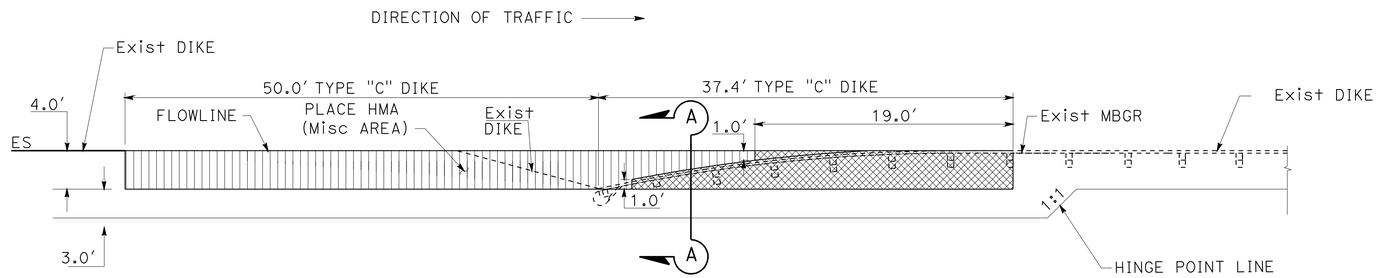

PLAN

MISCELLANEOUS PAVING AT MBGR FLARES

0.3' Misc HMA

0.1' Misc HMA

EASTBOUND	WESTBOUND
PM 55.8	PM 59.6
PM 60.9	PM 60.6

CONSTRUCTION DETAILS

NO SCALE

C-6

STATE OF CALIFORNIA - DEPARTMENT OF TRANSPORTATION
Caltrans
DESIGN

FUNCTIONAL SUPERVISOR: ED HAJJ

CALCULATED-DESIGNED BY: PHOUKHAO SASINOUAN
CHECKED BY: TOM GUERRINI

REVISED BY
DATE REVISED

LAST REVISION 01-11-11
DATE PLOTTED => 07-FEB-2011
TIME PLOTTED => 16:01

Dist	COUNTY	ROUTE	POST MILES TOTAL PROJECT	SHEET No.	TOTAL SHEETS
11	SD	8	R39.7/R61.5	11	71

Thomas M. Guerrini 01-07-11
REGISTERED CIVIL ENGINEER DATE

01-18-11
PLANS APPROVAL DATE

REGISTERED PROFESSIONAL ENGINEER THOMAS M. GUERRINI No. C65539 Exp. 09-30-11 CIVIL STATE OF CALIFORNIA

THE STATE OF CALIFORNIA OR ITS OFFICERS OR AGENTS SHALL NOT BE RESPONSIBLE FOR THE ACCURACY OR COMPLETENESS OF SCANNED COPIES OF THIS PLAN SHEET.

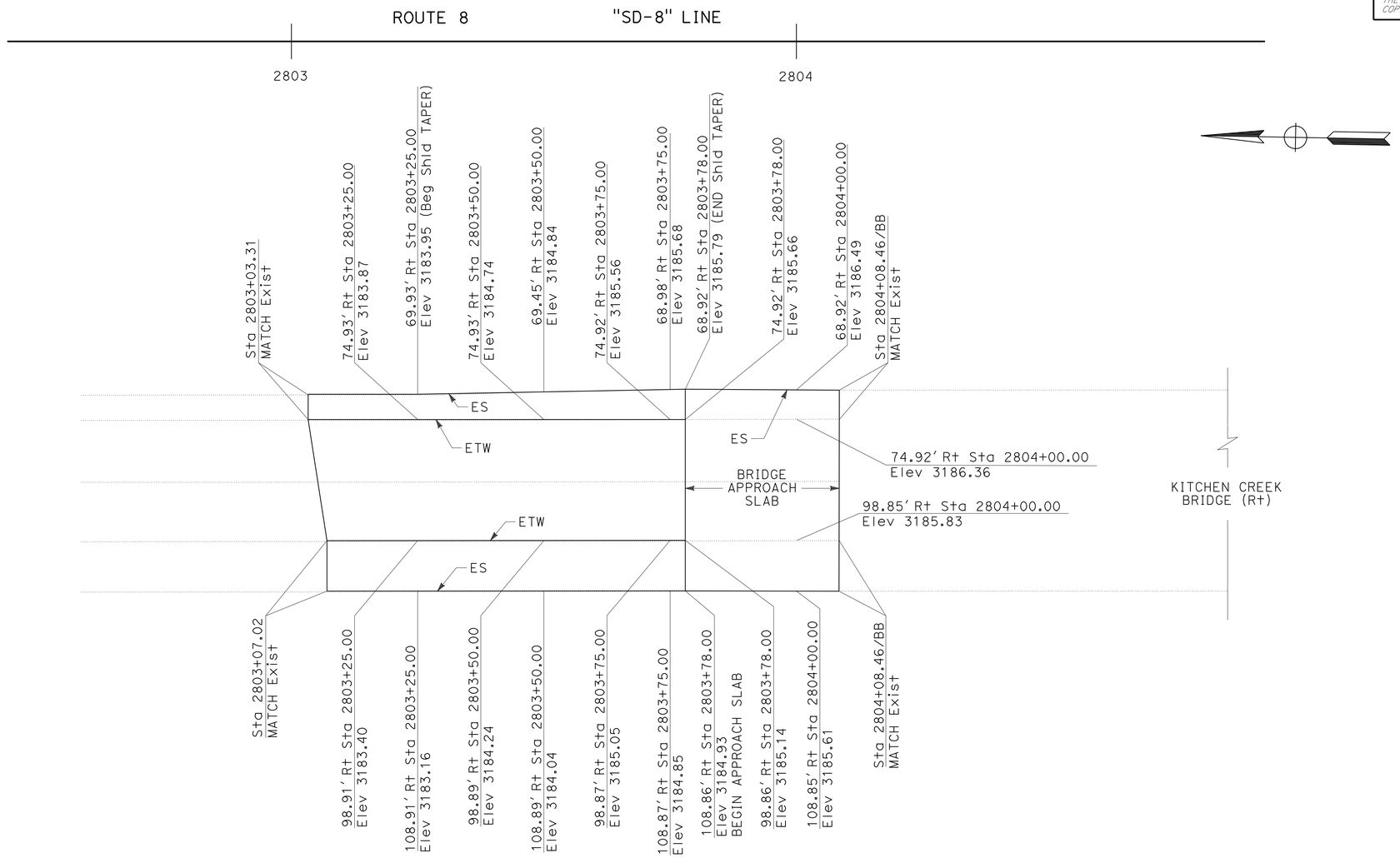

ROADWAY PROFILE RESTORATION NEAR KITCHEN CREEK BRIDGE

EB BRIDGE APPROACH AREA

CONSTRUCTION DETAILS

NO SCALE

C-7

STATE OF CALIFORNIA - DEPARTMENT OF TRANSPORTATION
Caltrans® DESIGN

FUNCTIONAL SUPERVISOR: ED HAJJ
CALCULATED-DESIGNED BY: PHOUKHAO SASINOUAN
CHECKED BY: YUSUF RAHMAN
REVISED BY
DATE REVISED

LAST REVISION 01-11-11
DATE PLOTTED => 07-FEB-2011
TIME PLOTTED => 16:02

Dist	COUNTY	ROUTE	POST MILES TOTAL PROJECT	SHEET No.	TOTAL SHEETS
11	SD	8	R39.7/R61.5	12	71

Thomas M. Guerrini 01-07-11
REGISTERED CIVIL ENGINEER DATE

01-18-11
PLANS APPROVAL DATE

REGISTERED PROFESSIONAL ENGINEER THOMAS M. GUERRINI No. C65539 Exp. 09-30-11 CIVIL STATE OF CALIFORNIA

THE STATE OF CALIFORNIA OR ITS OFFICERS OR AGENTS SHALL NOT BE RESPONSIBLE FOR THE ACCURACY OR COMPLETENESS OF SCANNED COPIES OF THIS PLAN SHEET.

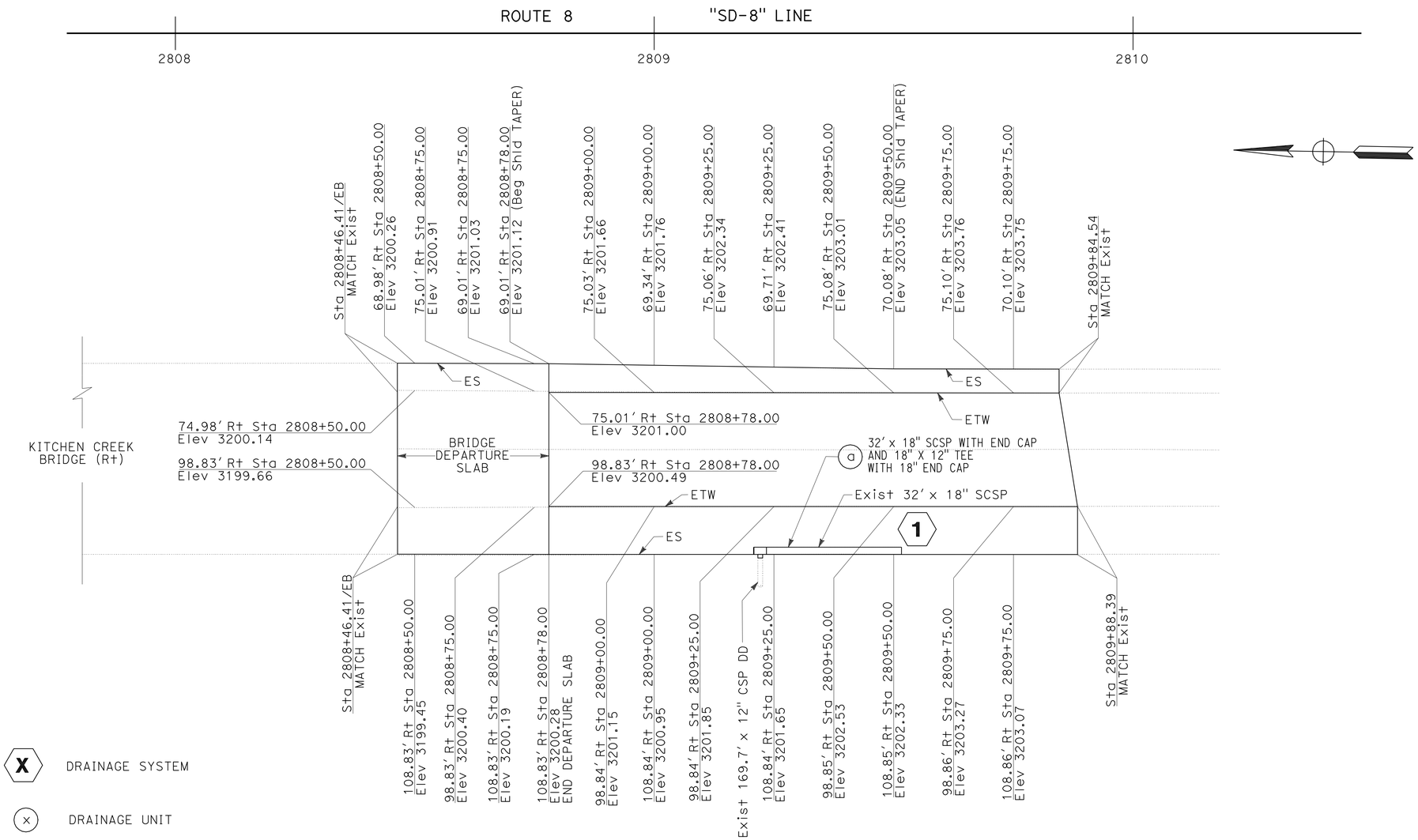

ROADWAY PROFILE RESTORATION NEAR KITCHEN CREEK BRIDGE

EB BRIDGE DEPARTURE AREA

CONSTRUCTION DETAILS

NO SCALE

C-8

STATE OF CALIFORNIA - DEPARTMENT OF TRANSPORTATION
Caltrans® DESIGN

FUNCTIONAL SUPERVISOR: ED HAJJ
CALCULATED-DESIGNED BY: PHOUKHAO SASINOUAN
CHECKED BY: YUSUF RAHMAN
REVISED BY
DATE REVISED

LAST REVISION 01-11-11
DATE PLOTTED => 07-FEB-2011
TIME PLOTTED => 16:02

Dist	COUNTY	ROUTE	POST MILES TOTAL PROJECT	SHEET No.	TOTAL SHEETS
11	SD	8	R39.7/R61.5	13	71

Thomas M. Guerrini 01-07-11
REGISTERED CIVIL ENGINEER DATE

01-18-11
PLANS APPROVAL DATE

REGISTERED PROFESSIONAL ENGINEER THOMAS M. GUERRINI No. C65539 Exp. 09-30-11 CIVIL STATE OF CALIFORNIA

THE STATE OF CALIFORNIA OR ITS OFFICERS OR AGENTS SHALL NOT BE RESPONSIBLE FOR THE ACCURACY OR COMPLETENESS OF SCANNED COPIES OF THIS PLAN SHEET.

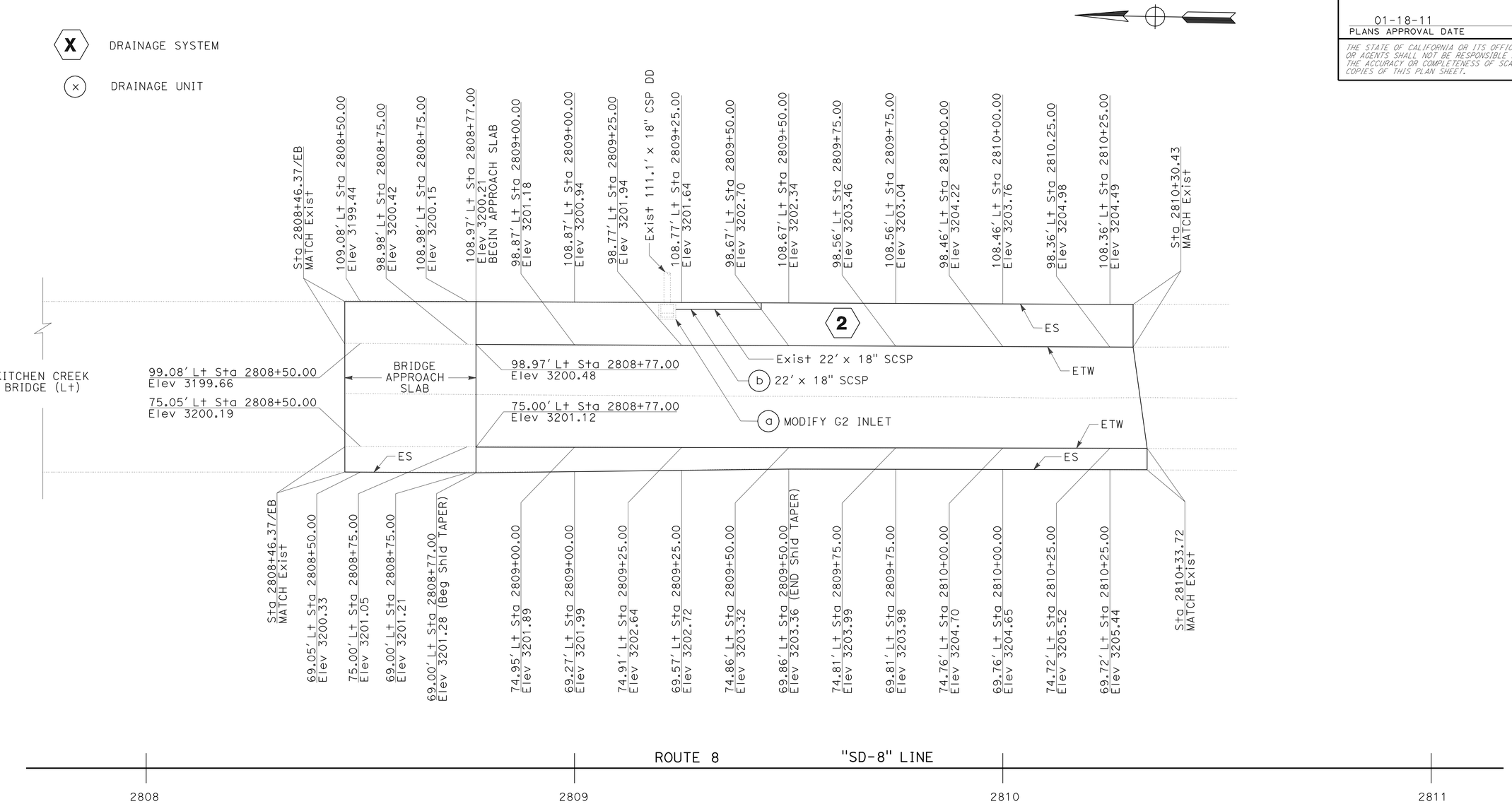

ROADWAY PROFILE RESTORATION NEAR KITCHEN CREEK BRIDGE

WB BRIDGE APPROACH AREA

CONSTRUCTION DETAILS

NO SCALE

C-9

STATE OF CALIFORNIA - DEPARTMENT OF TRANSPORTATION
Caltrans® DESIGN

FUNCTIONAL SUPERVISOR: ED HAJJ
CALCULATED-DESIGNED BY: PHOUKHAO SASINOUAN
CHECKED BY: YUSUF RAHMAN
REVISED BY
DATE REVISED

LAST REVISION 01-11-11
DATE PLOTTED => 07-FEB-2011
TIME PLOTTED => 16:02

Dist	COUNTY	ROUTE	POST MILES TOTAL PROJECT	SHEET No.	TOTAL SHEETS
11	SD	8	R39.7/R61.5	14	71

Thomas M. Guerrini 01-07-11
REGISTERED CIVIL ENGINEER DATE

01-18-11
PLANS APPROVAL DATE

REGISTERED PROFESSIONAL ENGINEER THOMAS M. GUERRINI No. C65539 Exp. 09-30-11 CIVIL STATE OF CALIFORNIA

THE STATE OF CALIFORNIA OR ITS OFFICERS OR AGENTS SHALL NOT BE RESPONSIBLE FOR THE ACCURACY OR COMPLETENESS OF SCANNED COPIES OF THIS PLAN SHEET.

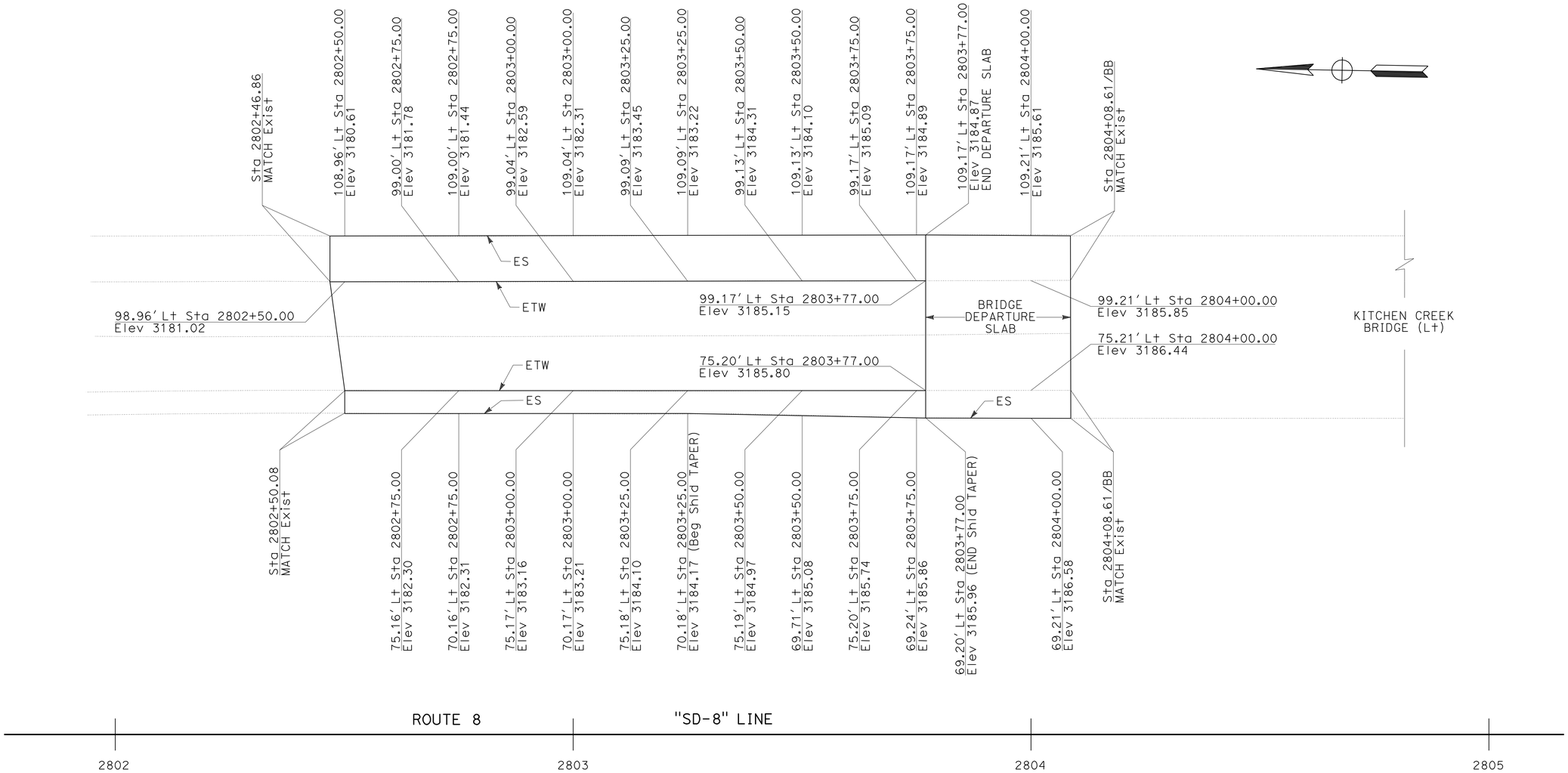

ROADWAY PROFILE RESTORATION NEAR KITCHEN CREEK BRIDGE

WB BRIDGE DEPARTURE AREA

CONSTRUCTION DETAILS

NO SCALE

C-10

STATE OF CALIFORNIA - DEPARTMENT OF TRANSPORTATION
Caltrans® DESIGN

FUNCTIONAL SUPERVISOR: ED HAJJ
CALCULATED-DESIGNED BY: PHOUKHAO SASINOUAN
CHECKED BY: YUSUF RAHMAN
REVISED BY
DATE REVISED

LAST REVISION 01-11-11 DATE PLOTTED => 07-FEB-2011 TIME PLOTTED => 16:02

Dist	COUNTY	ROUTE	POST MILES TOTAL PROJECT	SHEET No.	TOTAL SHEETS
11	SD	8	R39.7/R61.5	15	71

Thomas M. Guerrini 01-07-11
REGISTERED CIVIL ENGINEER DATE

01-18-11
PLANS APPROVAL DATE

REGISTERED PROFESSIONAL ENGINEER THOMAS M. GUERRINI No. C65539 Exp. 09-30-11 CIVIL STATE OF CALIFORNIA

THE STATE OF CALIFORNIA OR ITS OFFICERS OR AGENTS SHALL NOT BE RESPONSIBLE FOR THE ACCURACY OR COMPLETENESS OF SCANNED COPIES OF THIS PLAN SHEET.

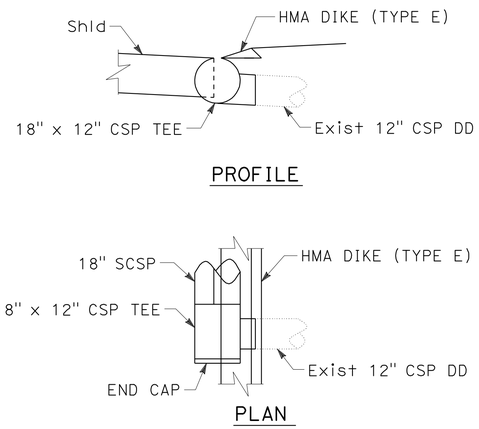

DETAIL A

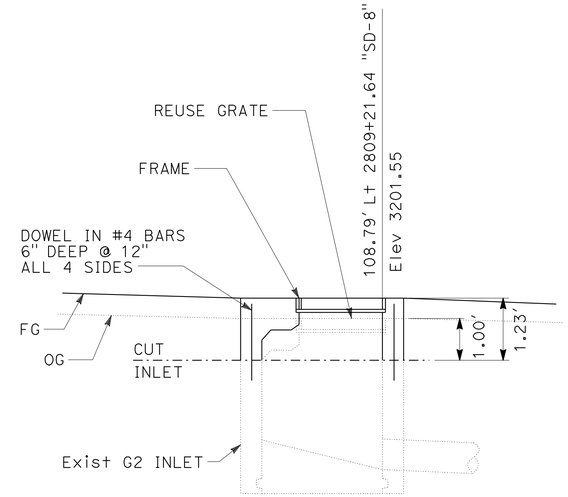

DETAIL B

NOTE: SEE D73 AND D98A FOR DETAILS NOT SHOWN

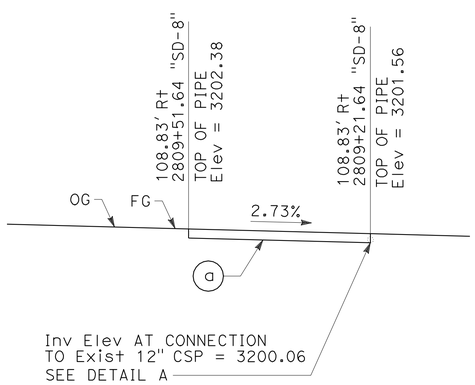

DRAINAGE SYSTEM 1

(a) 32' x 18" SCSP WITH 18" X 12" TEE AND 18" END CAP

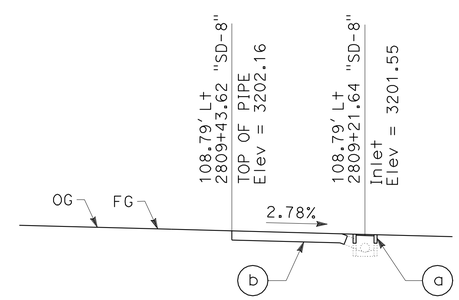

DRAINAGE SYSTEM 2

(a) MODIFY G2 INLET (SEE DETAIL B)

(b) 22' x 18" SCSP WITH 22°30' ELBOW

CONSTRUCTION DETAILS

NO SCALE

C-11

STATE OF CALIFORNIA - DEPARTMENT OF TRANSPORTATION
Caltrans
DESIGN

FUNCTIONAL SUPERVISOR: ED HAJJ
CALCULATED-DESIGNED BY: PHOUKHAO SASINOUAN
CHECKED BY: YUSUF RAHMAN
REVISED BY
DATE REVISED

LAST REVISION 01-11-11
DATE PLOTTED => 07-FEB-2011
TIME PLOTTED => 16:02

Dist	COUNTY	ROUTE	POST MILES TOTAL PROJECT	SHEET No.	TOTAL SHEETS
11	SD	8	R39.7/R61.5	16	71

Thomas M. Guerrini 01-07-11
REGISTERED CIVIL ENGINEER DATE

01-18-11
PLANS APPROVAL DATE

REGISTERED PROFESSIONAL ENGINEER
THOMAS M. GUERRINI
No. 65539
Exp. 09-30-11
CIVIL
STATE OF CALIFORNIA

THE STATE OF CALIFORNIA OR ITS OFFICERS OR AGENTS SHALL NOT BE RESPONSIBLE FOR THE ACCURACY OR COMPLETENESS OF SCANNED COPIES OF THIS PLAN SHEET.

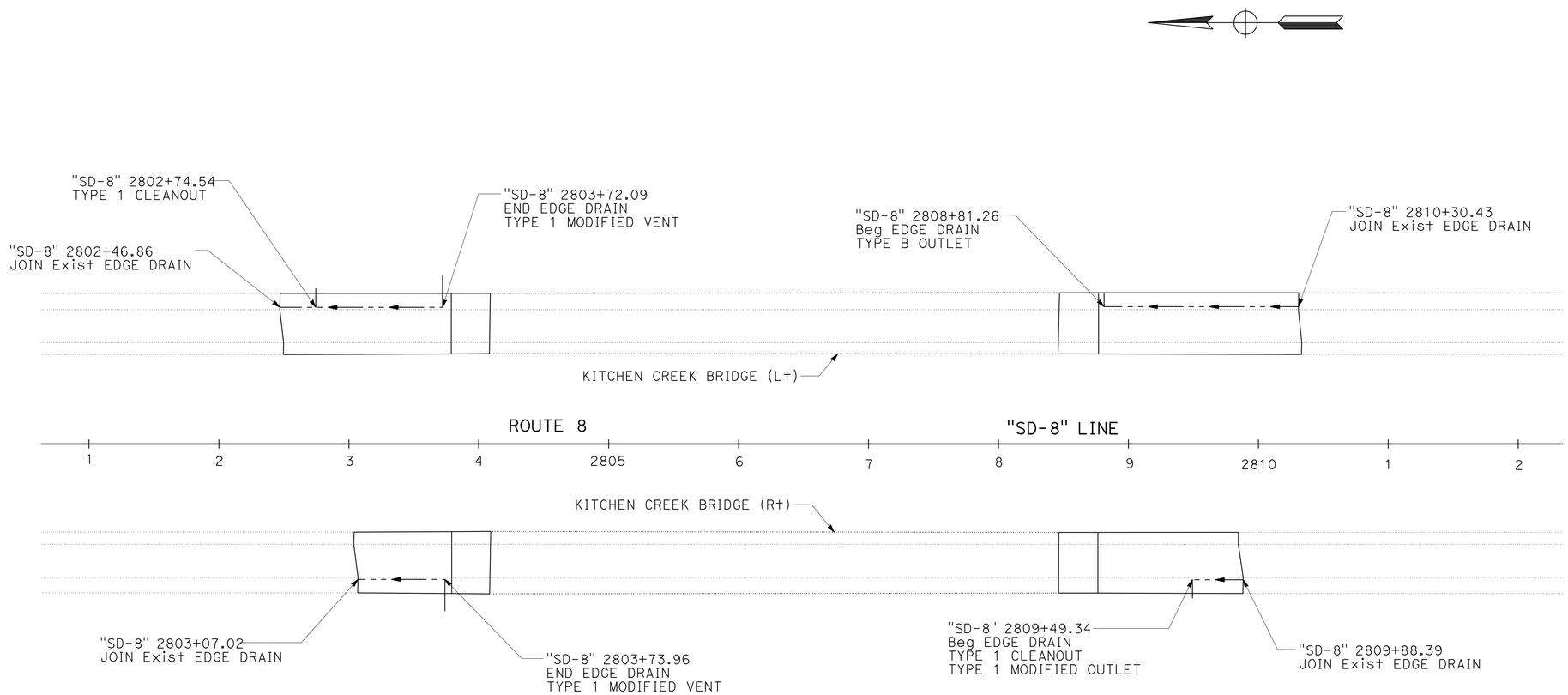

LEGEND:

EDGE DRAIN

EDGE DRAIN LAYOUT

CONSTRUCTION DETAILS

NO SCALE

C-12

STATE OF CALIFORNIA - DEPARTMENT OF TRANSPORTATION
Caltrans®
DESIGN

FUNCTIONAL SUPERVISOR: ED HAJJ
CALCULATED-DESIGNED BY: TOM GUERRINI
CHECKED BY: YUSUF RAHMAN
REVISED BY
DATE REVISED

LAST REVISION 01-11-11
DATE PLOTTED => 07-FEB-2011
TIME PLOTTED => 16:02

Dist	COUNTY	ROUTE	POST MILES TOTAL PROJECT	SHEET No.	TOTAL SHEETS
11	SD	8	R39.7/R61.5	17	71

Thomas M. Guerrini 01-07-11
REGISTERED CIVIL ENGINEER DATE

01-18-11
PLANS APPROVAL DATE

REGISTERED PROFESSIONAL ENGINEER THOMAS M. GUERRINI No. 65539 Exp. 09-30-11 CIVIL STATE OF CALIFORNIA

THE STATE OF CALIFORNIA OR ITS OFFICERS OR AGENTS SHALL NOT BE RESPONSIBLE FOR THE ACCURACY OR COMPLETENESS OF SCANNED COPIES OF THIS PLAN SHEET.

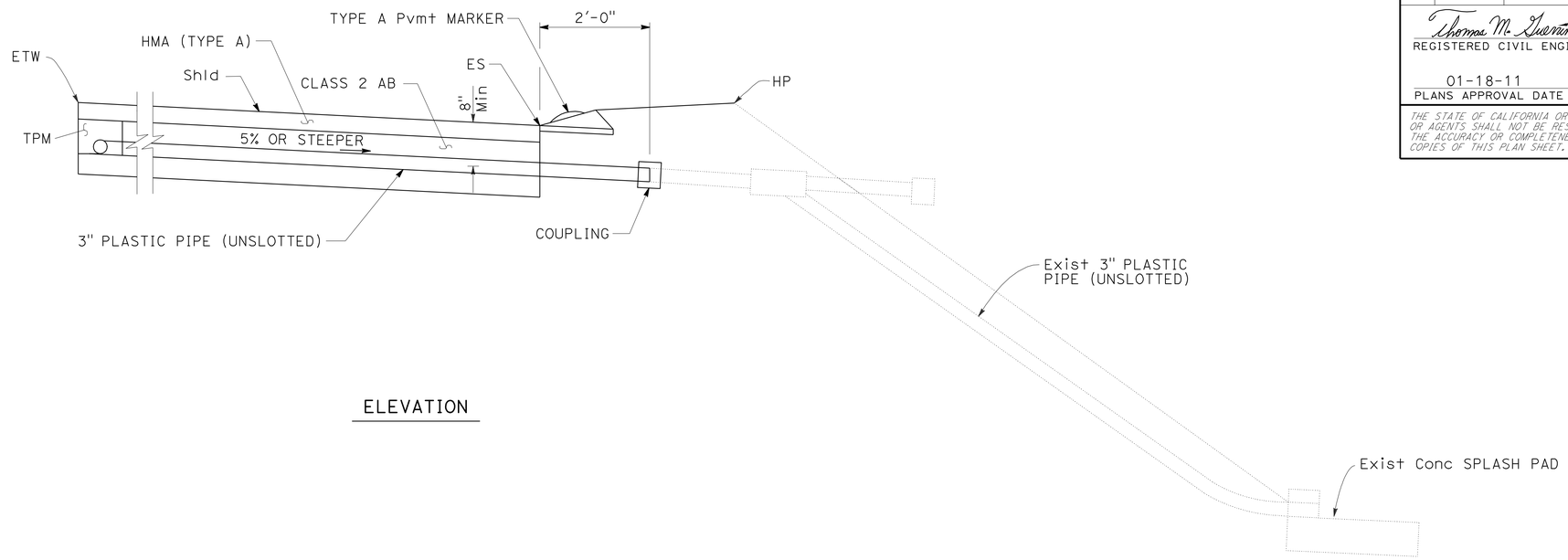

ELEVATION

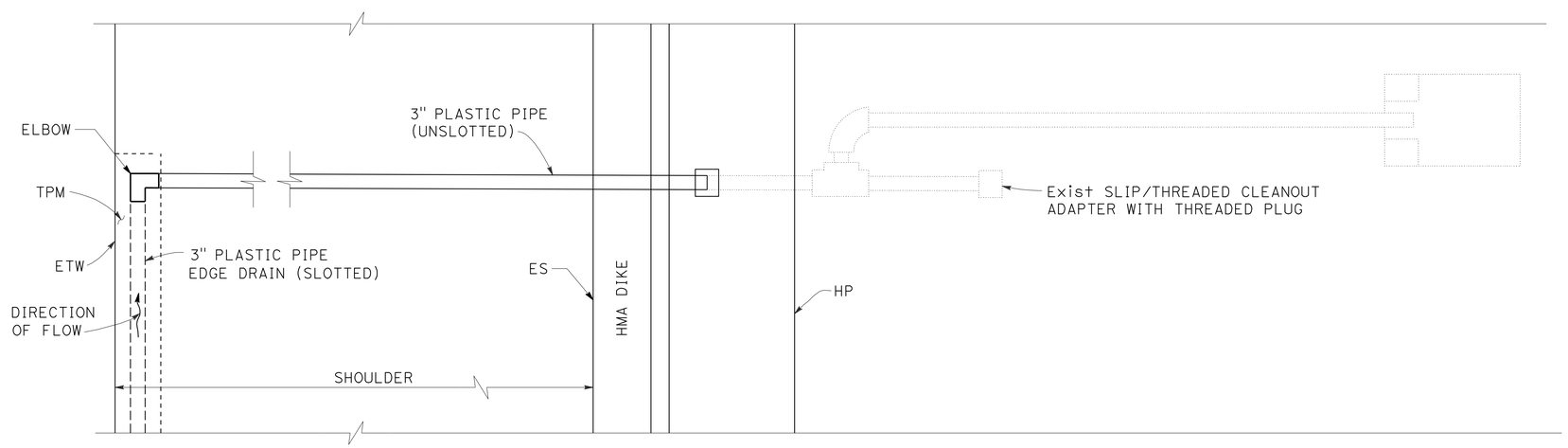

PLAN

TYPE B OUTLET

EDGE DRAIN DETAILS

CONSTRUCTION DETAILS

NO SCALE

C-13

STATE OF CALIFORNIA - DEPARTMENT OF TRANSPORTATION
Caltrans
DESIGN

FUNCTIONAL SUPERVISOR: ED HAJJ
CALCULATED-DESIGNED BY: TOM GUERRINI
CHECKED BY: YUSUF RAHMAN
REVISED BY
DATE REVISED

LAST REVISION 01-11-11
DATE PLOTTED => 07-FEB-2011
TIME PLOTTED => 16:02

Dist	COUNTY	ROUTE	POST MILES TOTAL PROJECT	SHEET No.	TOTAL SHEETS
11	SD	8	R39.7/R61.5	18	71

Thomas M. Guerrini 01-07-11
REGISTERED CIVIL ENGINEER DATE

01-18-11
PLANS APPROVAL DATE

REGISTERED PROFESSIONAL ENGINEER
THOMAS M. GUERRINI
No. 65539
Exp. 09-30-11
CIVIL
STATE OF CALIFORNIA

THE STATE OF CALIFORNIA OR ITS OFFICERS OR AGENTS SHALL NOT BE RESPONSIBLE FOR THE ACCURACY OR COMPLETENESS OF SCANNED COPIES OF THIS PLAN SHEET.

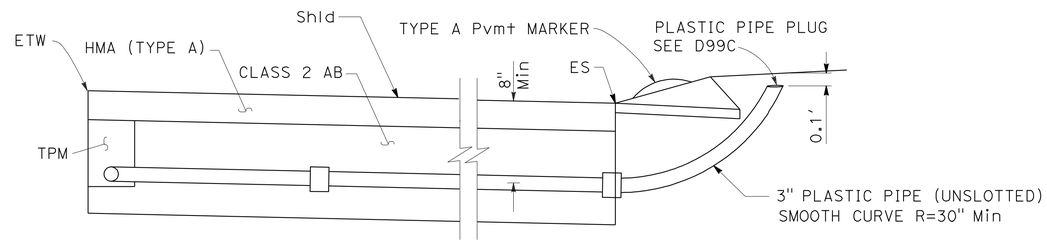

ELEVATION

NOTE:

1. USE 3" PLASTIC PIPE (UNSLOTTED) WITH Min R=30" IN PLACE OF "Y" FITTING WHEN TYPE 1 MODIFIED CLEANOUT IS USED WITH TYPE 1 MODIFIED OUTLET.

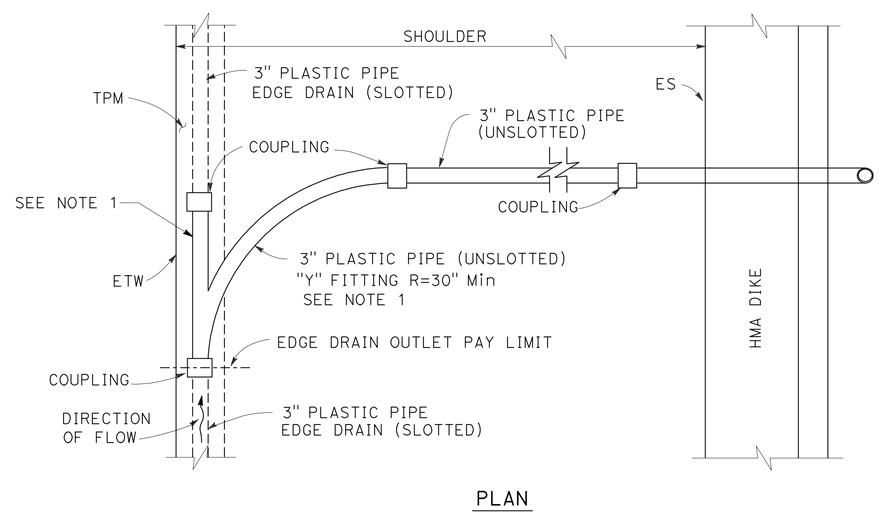

PLAN

TYPE 1 MODIFIED CLEANOUT

EDGE DRAIN DETAILS

CONSTRUCTION DETAILS

NO SCALE

C-14

STATE OF CALIFORNIA - DEPARTMENT OF TRANSPORTATION
Caltrans
DESIGN

FUNCTIONAL SUPERVISOR: ED HAJJ
CALCULATED-DESIGNED BY: TOM GUERRINI
CHECKED BY: YUSUF RAHMAN
REVISED BY
DATE REVISED

LAST REVISION 01-11-11
DATE PLOTTED => 07-FEB-2011
TIME PLOTTED => 16:02

Dist	COUNTY	ROUTE	POST MILES TOTAL PROJECT	SHEET No.	TOTAL SHEETS
11	SD	8	R39.7/R61.5	19	71

Thomas M. Guerrini 01-07-11
REGISTERED CIVIL ENGINEER DATE

01-18-11
PLANS APPROVAL DATE

REGISTERED PROFESSIONAL ENGINEER THOMAS M. GUERRINI No. 65539 Exp. 09-30-11 CIVIL STATE OF CALIFORNIA

THE STATE OF CALIFORNIA OR ITS OFFICERS OR AGENTS SHALL NOT BE RESPONSIBLE FOR THE ACCURACY OR COMPLETENESS OF SCANNED COPIES OF THIS PLAN SHEET.

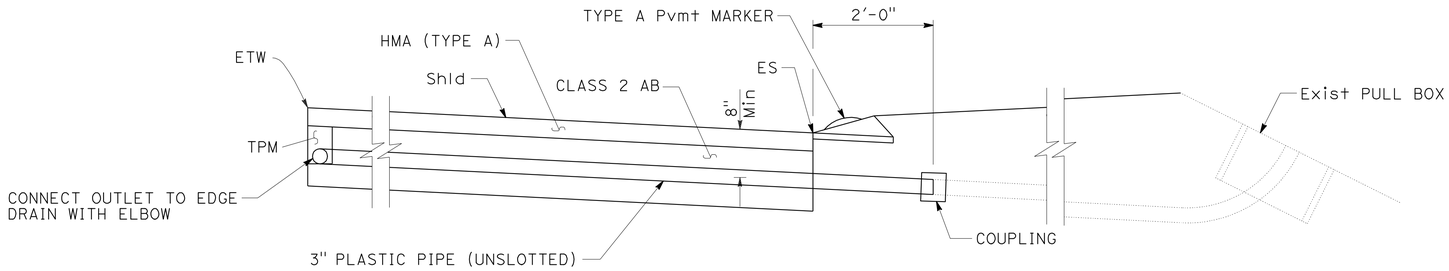

ELEVATION

NOTE: ONLY PLACE DIKE WHERE LISTED ON DIKE QUANTITY TABLES.
IF DIKE IS NOT REQUIRED, PLACE TYPE A Pvmt ON SHOULDER

TYPE 1 MODIFIED VENT

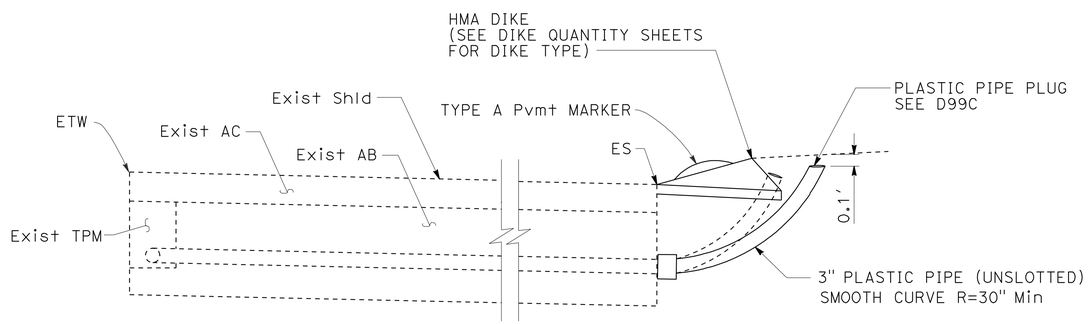

ELEVATION

RECONSTRUCT EDGE DRAIN CLEANOUT

NOTE: SEE DIKE QUANTITY SHEETS FOR LOCATIONS

EDGE DRAIN DETAILS

CONSTRUCTION DETAILS

NO SCALE

C-15

STATE OF CALIFORNIA - DEPARTMENT OF TRANSPORTATION
Caltrans® DESIGN

FUNCTIONAL SUPERVISOR: ED HAJJ
CALCULATED-DESIGNED BY: TOM GUERRINI
CHECKED BY: YUSUF RAHMAN
REVISED BY
DATE REVISED

LAST REVISION 01-12-11
DATE PLOTTED => 07-FEB-2011
TIME PLOTTED => 16:02

Dist	COUNTY	ROUTE	POST MILES TOTAL PROJECT	SHEET No.	TOTAL SHEETS
11	SD	8	R39.7/R61.5	20	71

Thomas M. Guerrini 01-07-11
REGISTERED CIVIL ENGINEER DATE

01-18-11
PLANS APPROVAL DATE

REGISTERED PROFESSIONAL ENGINEER
THOMAS M. GUERRINI
No. 65539
Exp. 09-30-11
CIVIL
STATE OF CALIFORNIA

THE STATE OF CALIFORNIA OR ITS OFFICERS OR AGENTS SHALL NOT BE RESPONSIBLE FOR THE ACCURACY OR COMPLETENESS OF SCANNED COPIES OF THIS PLAN SHEET.

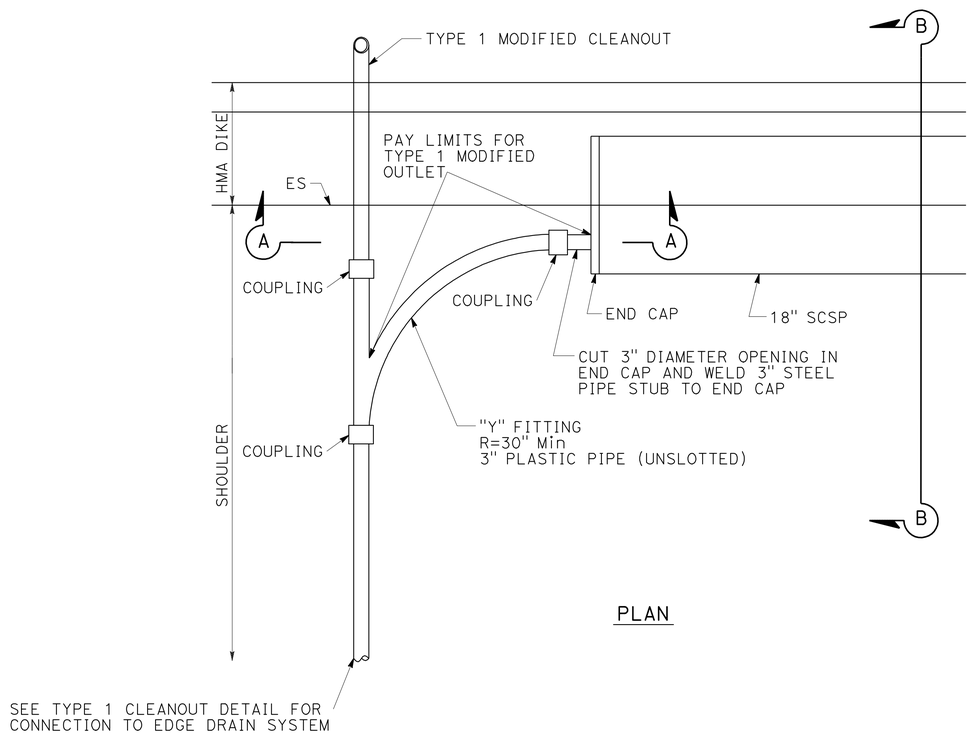

PLAN

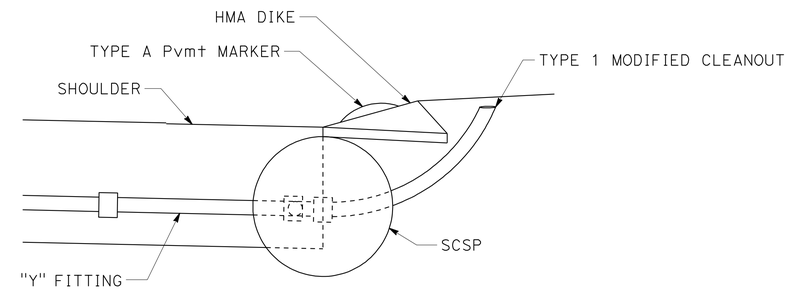

SECTION B-B

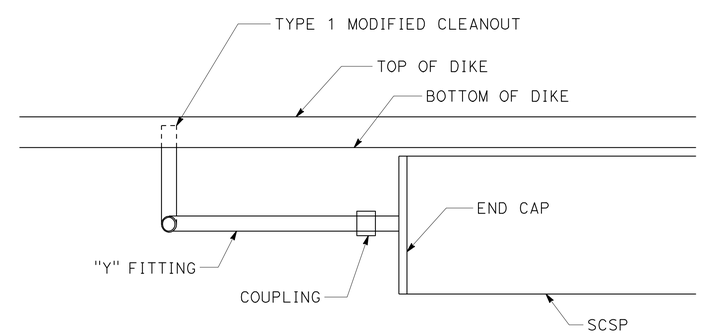

SECTION A-A

TYPE 1 MODIFIED OUTLET

EDGE DRAIN DETAILS

CONSTRUCTION DETAILS

NO SCALE

C-16

STATE OF CALIFORNIA - DEPARTMENT OF TRANSPORTATION
Caltrans® DESIGN

FUNCTIONAL SUPERVISOR: ED HAJJ
CALCULATED-DESIGNED BY: TOM GUERRINI
CHECKED BY: YUSUF RAHMAN
REVISED BY
DATE REVISED

LAST REVISION 01-12-11
DATE PLOTTED => 07-FEB-2011
TIME PLOTTED => 16:02

Dist	COUNTY	ROUTE	POST MILES TOTAL PROJECT	SHEET No.	TOTAL SHEETS
11	SD	8	R39.7/R61.5	21	71

Thomas M. Guerrini 01-07-11
REGISTERED CIVIL ENGINEER DATE

01-18-11
PLANS APPROVAL DATE

REGISTERED PROFESSIONAL ENGINEER THOMAS M. GUERRINI No. 65539 Exp. 09-30-11 CIVIL STATE OF CALIFORNIA

THE STATE OF CALIFORNIA OR ITS OFFICERS OR AGENTS SHALL NOT BE RESPONSIBLE FOR THE ACCURACY OR COMPLETENESS OF SCANNED COPIES OF THIS PLAN SHEET.

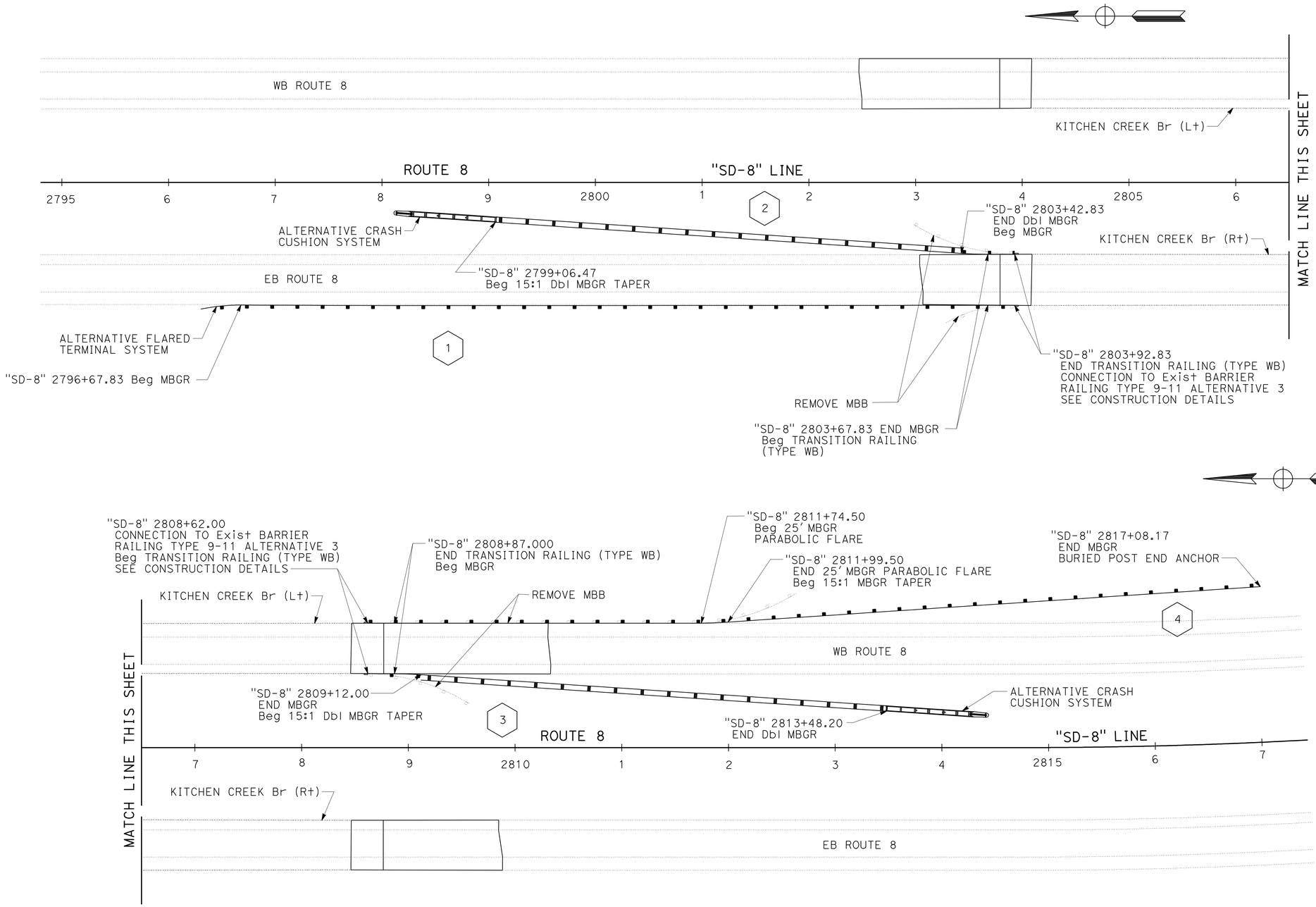

BRIDGE APPROACH GUARD RAIL AT KITCHEN CREEK BRIDGE

CONSTRUCTION DETAILS

NO SCALE

C-17

STATE OF CALIFORNIA - DEPARTMENT OF TRANSPORTATION
Caltrans
DESIGN

FUNCTIONAL SUPERVISOR: ED HAJJ
CALCULATED-DESIGNED BY: TOM GUERRINI
CHECKED BY: YUSUF RAHMAN
REVISED BY
DATE REVISED

LAST REVISION 01-12-11
DATE PLOTTED => 07-FEB-2011
TIME PLOTTED => 16:02

Dist	COUNTY	ROUTE	POST MILES TOTAL PROJECT	SHEET No.	TOTAL SHEETS
11	SD	8	R39.7/R61.5	22	71

Thomas M. Guerrini 01-07-11
REGISTERED CIVIL ENGINEER DATE

01-18-11
PLANS APPROVAL DATE

REGISTERED PROFESSIONAL ENGINEER THOMAS M. GUERRINI No. 65539 Exp. 09-30-11 CIVIL STATE OF CALIFORNIA

THE STATE OF CALIFORNIA OR ITS OFFICERS OR AGENTS SHALL NOT BE RESPONSIBLE FOR THE ACCURACY OR COMPLETENESS OF SCANNED COPIES OF THIS PLAN SHEET.

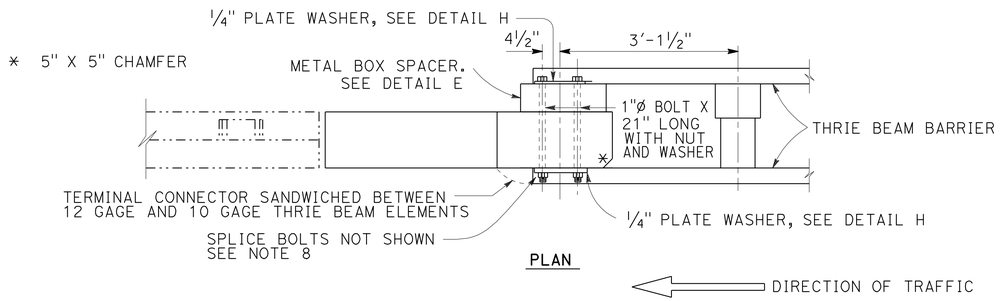

PLAN

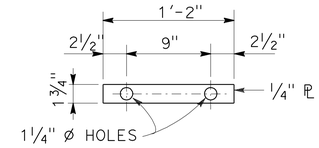

DETAIL H

NOTES:

1. FOR DETAILS NOT SHOWN, SEE STANDARD PLANS.
2. DEPENDENT DIMENSIONS WILL BE VERIFIED IN THE FIELD BEFORE FABRICATING ANY END CONNECTION TO CONFORM WITH EXISTING PAVED CONDITIONS.
3. WHEN END SECTION IS CALLED FOR, MODIFY TYPICAL TERMINAL SECTION TO FIT. SEE DETAIL E.
4. FOR THRIE BEAM CONNECTION, SEE STANDARD PLANS "THRIE BEAM BARRIER CONNECTIONS TO BRIDGE RAILING".
5. ALL PLATES AND BOLTS ARE GALVANIZED.
6. CUT AND REMOVE THAT PORTION OF TYPE 9, 9-11 AND BAGR AS REQUIRED.
7. IF RAIL IS NOT CONTINUOUS OVER 2 POSTS, USE SPLICE AT EXPANSION JOINT.
8. EXTERIOR SPLICE BOLT HOLES SHALL BE THE STANDARD 7/8" X 1 1/8" SLOT SIZE FOR RAIL SPLICES AT POST # T4 AND THE CONNECTION TO THE CONCRETE BARRIER OR RAILING. INTERIOR SPLICE BOLT HOLES MAY BE INCREASED UP TO 1 1/8" DIA. WASHERS SHALL BE USED WITH SPLICE BOLTS ON BACK SIDE OF RAIL ELEMENT AT POST # T4 AND CONNECTION TO THE CONCRETE BARRIER OR RAILING.
9. TAPER THE TOP OF THE END OF THE BRIDGE RAILING AT 4:1 TO MATCH THE TOP ELEVATION OF THE THRIE BEAM RAIL ELEMENT.

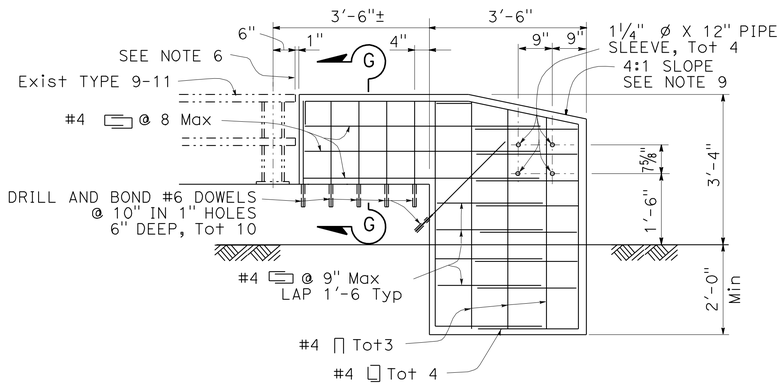

ELEVATION

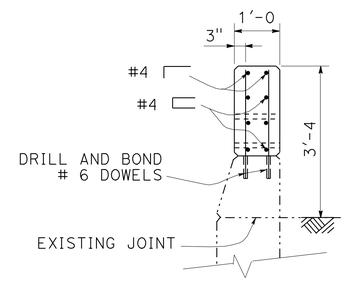

SECTION G-G

CONNECTION TO Exist BARRIER RAILING TYPE 9-11

ALTERNATIVE 3

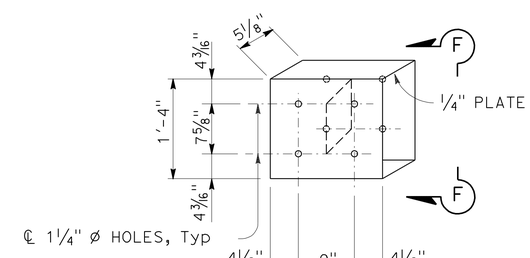

DETAIL E

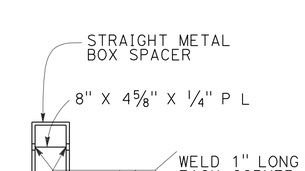

VIEW F-F

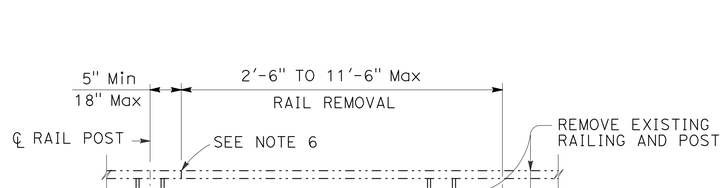

ELEVATION

RAIL REMOVAL

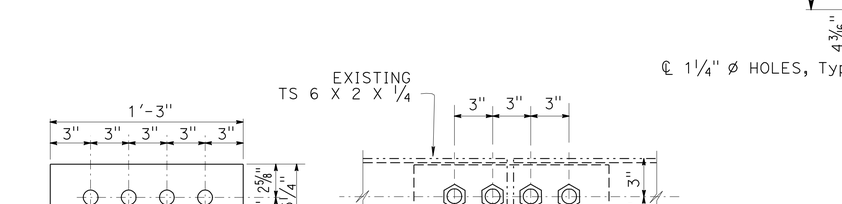

SPLICE PLATE

MODIFIED TUBE

RAIL SPLICE DETAIL

SEE NOTE 7

THRIE BEAM CONNECTION TO BARRIER RAILING TYPE 9-11

CONSTRUCTION DETAILS

NO SCALE

C-18

STATE OF CALIFORNIA - DEPARTMENT OF TRANSPORTATION
DESIGN
FUNCTIONAL SUPERVISOR: ED HAJJ
CALCULATED-DESIGNED BY: TOM GUERRINI
CHECKED BY: YUSUF RAHMAN
REVISED BY
DATE REVISED

LAST REVISION 01-12-11
DATE PLOTTED => 07-FEB-2011
TIME PLOTTED => 16:02

Dist	COUNTY	ROUTE	POST MILES TOTAL PROJECT	SHEET No.	TOTAL SHEETS
11	SD	8	R39.7/R61.5	23	71

REGISTERED CIVIL ENGINEER 01-06-11 DATE

01-18-11
PLANS APPROVAL DATE

REGISTERED PROFESSIONAL ENGINEER SHAHIN ADIBI No. 54839 Exp. 06-30-12 CIVIL STATE OF CALIFORNIA

THE STATE OF CALIFORNIA OR ITS OFFICERS OR AGENTS SHALL NOT BE RESPONSIBLE FOR THE ACCURACY OR COMPLETENESS OF SCANNED COPIES OF THIS PLAN SHEET.

NOTES:

1. EXACT LOCATION OF CONSTRUCTION AREA SIGNS SHALL BE DETERMINED BY THE ENGINEER.
2. FEDERAL MANUAL ON UNIFORM TRAFFIC CONTROL DEVICES (MUTCD) SIGN CODES ARE SHOWN UNLESS DESIGNATED BY (CA), INDICATING CALIFORNIA MUTCD.
3. EXISTING UTILITIES ARE NOT SHOWN ON THESE PLAN SHEETS. THE CONTRACTOR SHALL VERIFY LOCATIONS OF EXISTING UTILITIES AND ADJUST THE FIELD LOCATION OF SIGN POSTS IN CONSULTATION WITH THE ENGINEER TO AVOID IMPACTING THE UTILITY FACILITIES.

LEGEND:

XX = CONSTRUCTION AREA SIGN

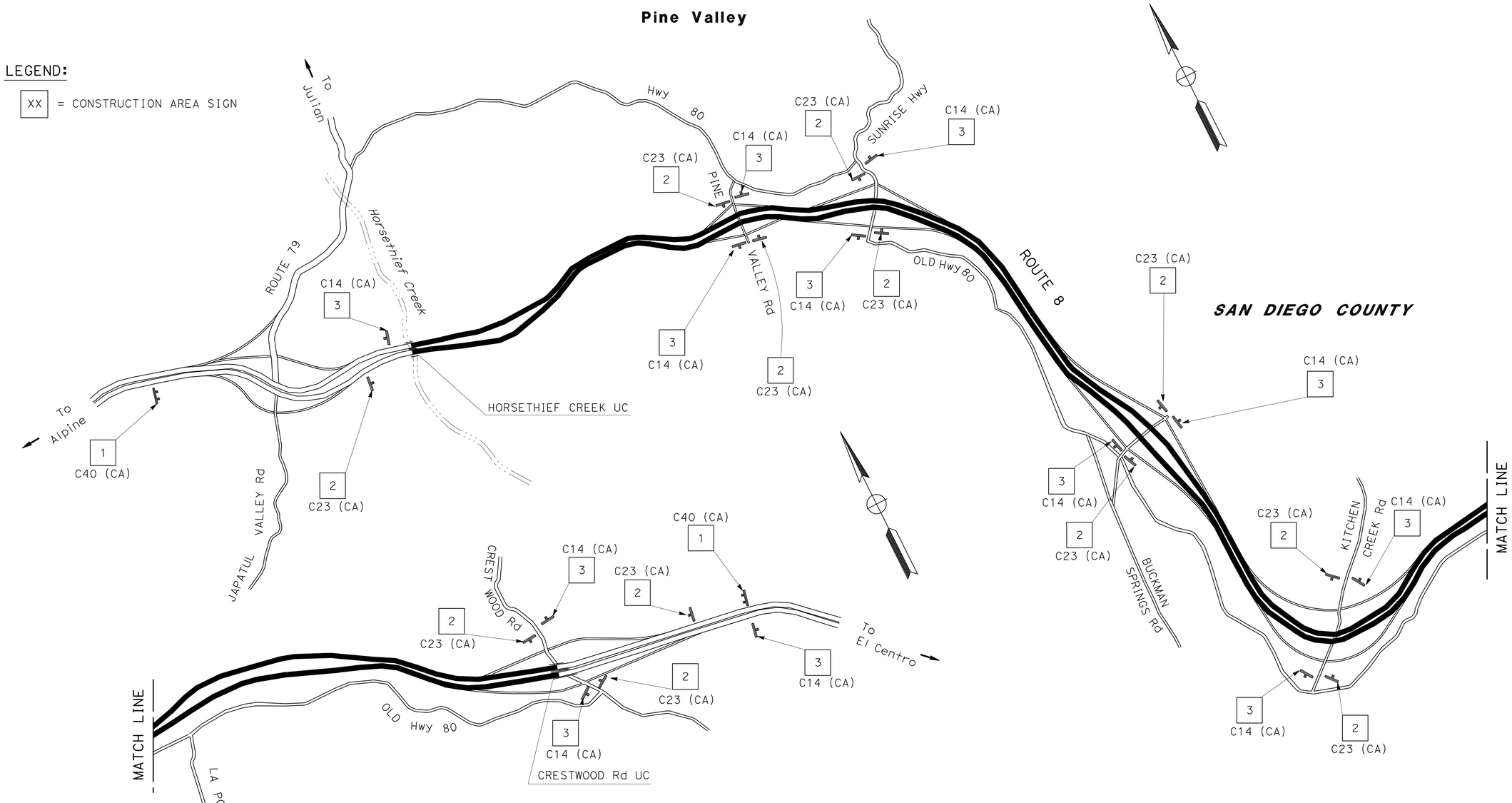

THIS PLAN ACCURATE FOR CONSTRUCTION AREA SIGN WORK ONLY

CONSTRUCTION AREA SIGNS

NO SCALE

CS-1

STATE OF CALIFORNIA - DEPARTMENT OF TRANSPORTATION
Caltrans® TRAFFIC DESIGN

FUNCTIONAL SUPERVISOR: CAMILLE ABOU-FADEL
CALCULATED-DESIGNED BY: ANH NGUYEN
CHECKED BY: THANH NGUYEN
REVISED BY
DATE REVISED

LAST REVISION 01-14-11
DATE PLOTTED => 07-FEB-2011
TIME PLOTTED => 16:03

Dist	COUNTY	ROUTE	POST MILES TOTAL PROJECT	SHEET No.	TOTAL SHEETS
11	SD	8	R39.7/R61.5	24	71

01-06-11
REGISTERED CIVIL ENGINEER DATE

01-18-11
PLANS APPROVAL DATE

REGISTERED PROFESSIONAL ENGINEER
SHAHIN ADIBI
No. 54839
Exp. 06-30-12
CIVIL
STATE OF CALIFORNIA

THE STATE OF CALIFORNIA OR ITS OFFICERS OR AGENTS SHALL NOT BE RESPONSIBLE FOR THE ACCURACY OR COMPLETENESS OF SCANNED COPIES OF THIS PLAN SHEET.

TYPICAL PLACEMENT OF TRAFFIC PLASTIC DRUM

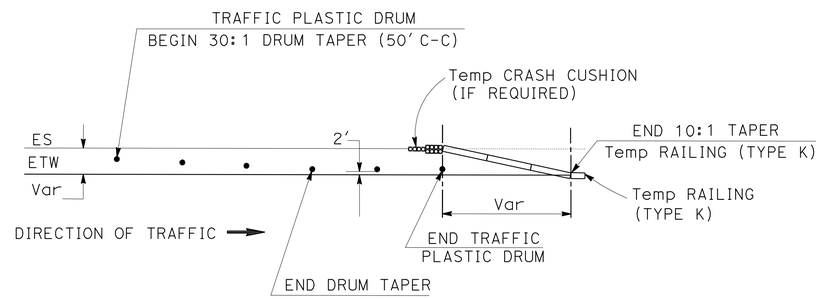

TYPICAL- PLACEMENT OF SC6-4 (CA)

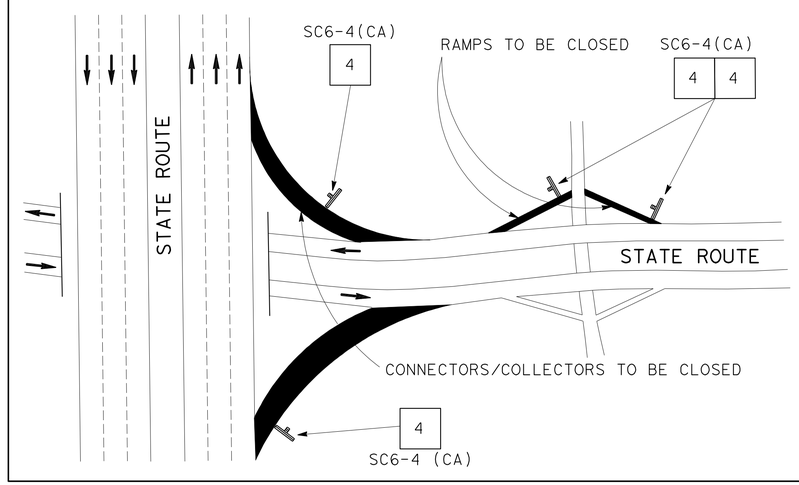

CONSTRUCTION AREA SIGNS

SIGN No.	CODE	PANEL SIZE (In)	No. OF POST AND SIZE (In)	No. OF SIGNS	REMARK
1	C40 (CA)	108 X 42	2-4 X 6 (S)	2	
2	C23 (CA)	48 X 48	1-4 X 6 (S)	12	
3	C14 (CA)	48 X 24	1-4 X 4 (S)	12	
4	SC6-4 (CA)	48 X 60	PORTABLE	20	
5	SPCL-1	72 X 72		5	TH-1 TO TH-2
6	SC9 (CA)	36 X 36		34	
7	M4-8a	24 X 18		2	
8	SPCL-2	72 X 72		4	
			TOTAL	91*	

(S) DENOTES STATIONARY MOUNTED SIGN
SEE "SCQ" SHEETS FOR ADDITIONAL QUANTITIES

CONSTRUCTION AREA SIGNS

NO SCALE

CS-2

STATE OF CALIFORNIA - DEPARTMENT OF TRANSPORTATION
Caltrans
TRAFFIC DESIGN

FUNCTIONAL SUPERVISOR: CAMILLE ABOU-FADEL
CALCULATED-DESIGNED BY: ANH NGUYEN
CHECKED BY: THANH NGUYEN
REVISED BY
DATE REVISED

LAST REVISION 01-14-11
DATE PLOTTED => 07-FEB-2011
TIME PLOTTED => 16:03

Dist	COUNTY	ROUTE	POST MILES TOTAL PROJECT	SHEET No.	TOTAL SHEETS
11	SD	8	R39.7/R61.5	25	71

Thomas M. Guerrini 01-07-11
REGISTERED CIVIL ENGINEER DATE

01-18-11
PLANS APPROVAL DATE

REGISTERED PROFESSIONAL ENGINEER THOMAS M. GUERRINI No. 65539 Exp. 09-30-11 CIVIL STATE OF CALIFORNIA

THE STATE OF CALIFORNIA OR ITS OFFICERS OR AGENTS SHALL NOT BE RESPONSIBLE FOR THE ACCURACY OR COMPLETENESS OF SCANNED COPIES OF THIS PLAN SHEET.

NOTES:

1. REMOVE CONFLICTING STRIPES.
2. FOR LANE CLOSURE DETAILS SEE STANDARD PLAN T10A.
3. FOR STAGE LOCATION DETAILS SEE STAGE CONSTRUCTION QUANTITIES SHEET (SCQ-1).
4. FEDERAL MANUAL ON UNIFORM TRAFFIC CONTROL (MUTCD) SIGN CODES ARE SHOWN UNLESS DESIGNATED BY (CA) INDICATING STANDARD CALIFORNIA SIGN SPECIFICATIONS ARE USED.

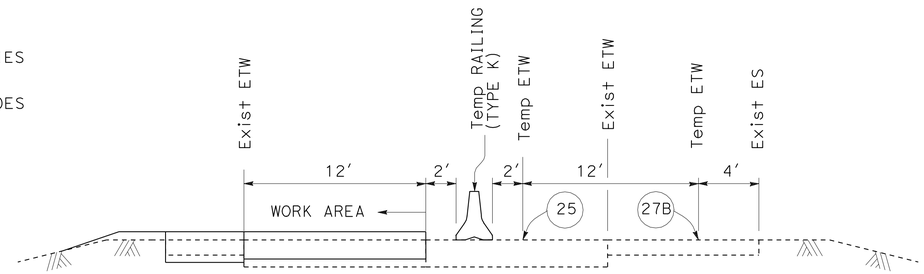

SECTION A-A
NO SCALE

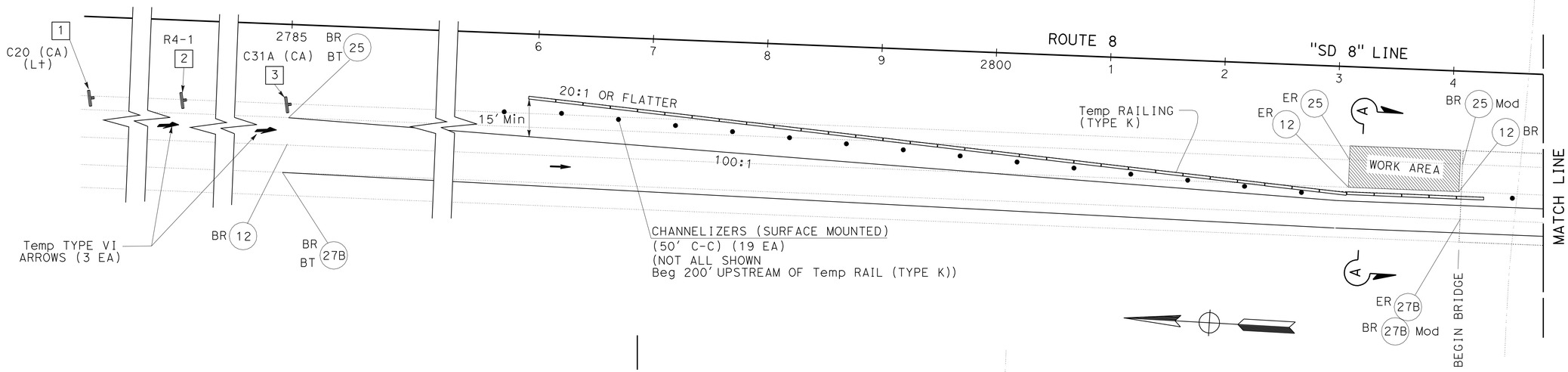

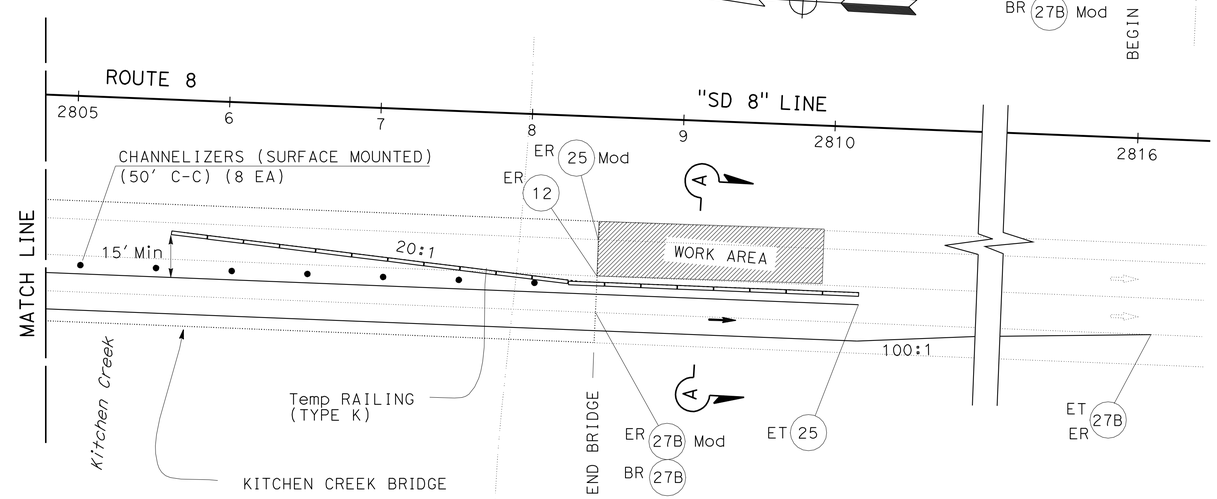

STAGE 1
EASTBOUND

LEGEND:

- BR = BEGIN REMOVE TRAFFIC STRIPE
- ER = END REMOVE TRAFFIC STRIPE
- BT = BEGIN TEMPORARY TRAFFIC STRIPE
- ET = END TEMPORARY TRAFFIC STRIPE
- (XX) = TRAFFIC STRIPE DETAIL No.
- [X] = CONSTRUCTION AREA SIGN
- → = DIRECTION OF TRAFFIC
- ▨ = WORK AREA

THIS PLAN ACCURATE FOR STAGE CONSTRUCTION WORK ONLY

STAGE CONSTRUCTION

SCALE: 1" = 50'

SC-1

REVISED BY | DATE REVISED
ANH NGUYEN | YUSUF RAHMAN
CALCULATED-DESIGNED BY | CHECKED BY
FUNCTIONAL SUPERVISOR: ED HAJJ

STATE OF CALIFORNIA - DEPARTMENT OF TRANSPORTATION
Caltrans
DESIGN

LAST REVISION 01-12-11 | DATE PLOTTED => 07-FEB-2011 | TIME PLOTTED => 16:03

Dist	COUNTY	ROUTE	POST MILES TOTAL PROJECT	SHEET No.	TOTAL SHEETS
11	SD	8	R39.7/R61.5	26	71

Thomas M. Guerrini 01-07-11
REGISTERED CIVIL ENGINEER DATE

01-18-11
PLANS APPROVAL DATE

REGISTERED PROFESSIONAL ENGINEER THOMAS M. GUERRINI No. 65539 Exp. 09-30-11 CIVIL STATE OF CALIFORNIA

THE STATE OF CALIFORNIA OR ITS OFFICERS OR AGENTS SHALL NOT BE RESPONSIBLE FOR THE ACCURACY OR COMPLETENESS OF SCANNED COPIES OF THIS PLAN SHEET.

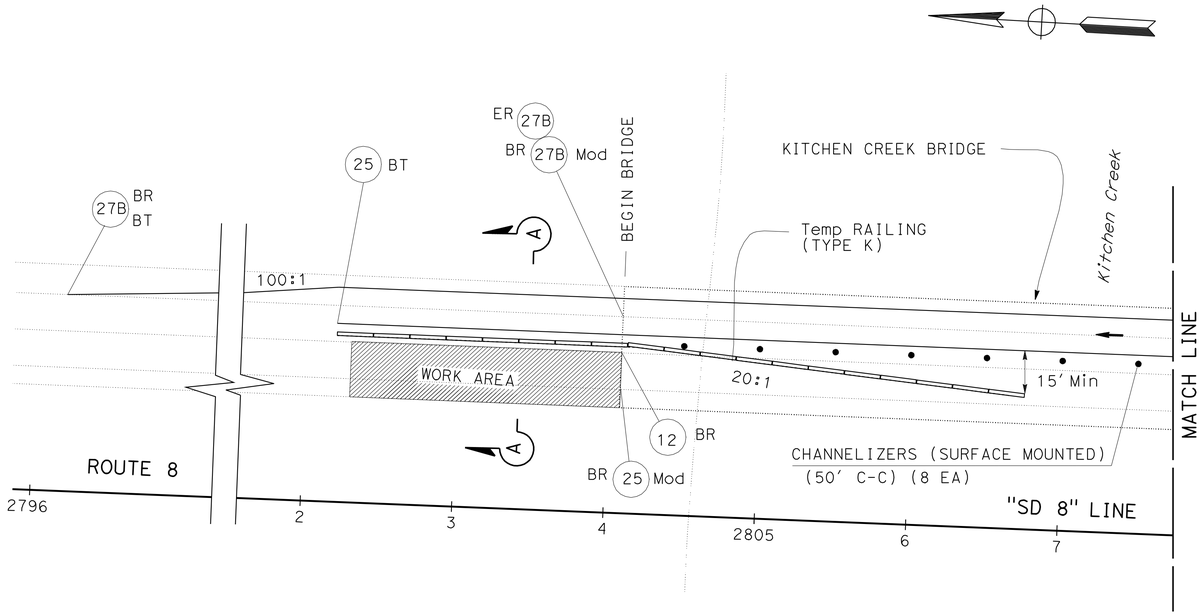

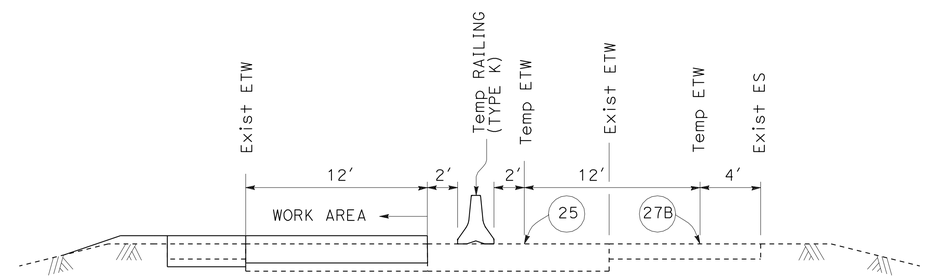

SECTION A-A
NO SCALE

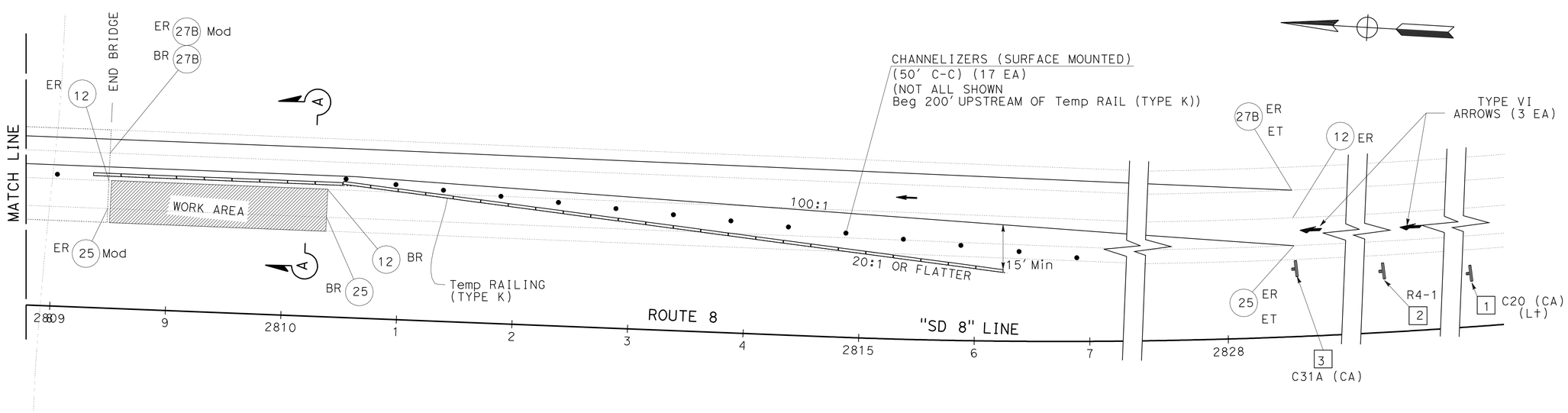

STAGE 1
WESTBOUND

THIS PLAN ACCURATE FOR STAGE CONSTRUCTION WORK ONLY

STAGE CONSTRUCTION

SCALE: 1" = 50'

SC-2

STATE OF CALIFORNIA - DEPARTMENT OF TRANSPORTATION
Caltrans
DESIGN
FUNCTIONAL SUPERVISOR: ED HAJJ
CALCULATED-DESIGNED BY: ANH NGUYEN
CHECKED BY: YUSUF RAHMAN
REVISED BY
DATE REVISED

LAST REVISION 01-13-11
DATE PLOTTED => 07-FEB-2011
TIME PLOTTED => 16:03

Dist	COUNTY	ROUTE	POST MILES TOTAL PROJECT	SHEET No.	TOTAL SHEETS
11	SD	8	R39.7/R61.5	27	71

Thomas M. Guerrini 01-07-11
REGISTERED CIVIL ENGINEER DATE

01-18-11
PLANS APPROVAL DATE

REGISTERED PROFESSIONAL ENGINEER THOMAS M. GUERRINI No. 65539 Exp. 09-30-11 CIVIL STATE OF CALIFORNIA

THE STATE OF CALIFORNIA OR ITS OFFICERS OR AGENTS SHALL NOT BE RESPONSIBLE FOR THE ACCURACY OR COMPLETENESS OF SCANNED COPIES OF THIS PLAN SHEET.

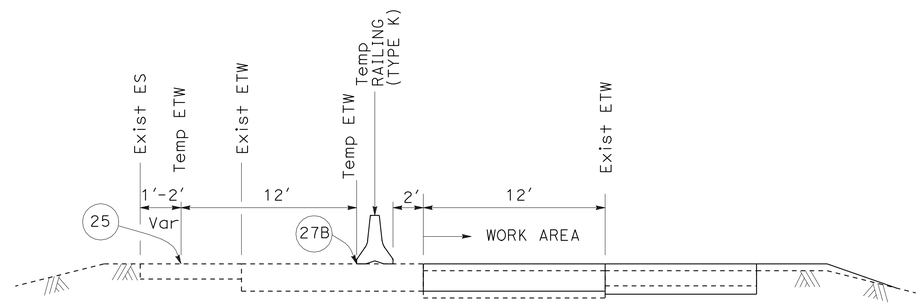

SECTION B-B
NO SCALE

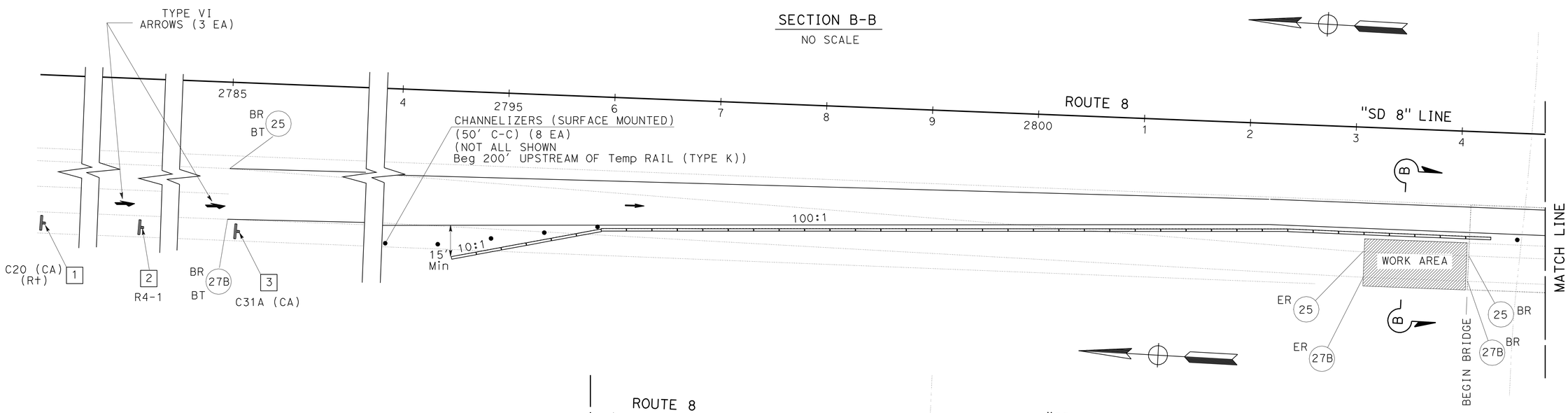

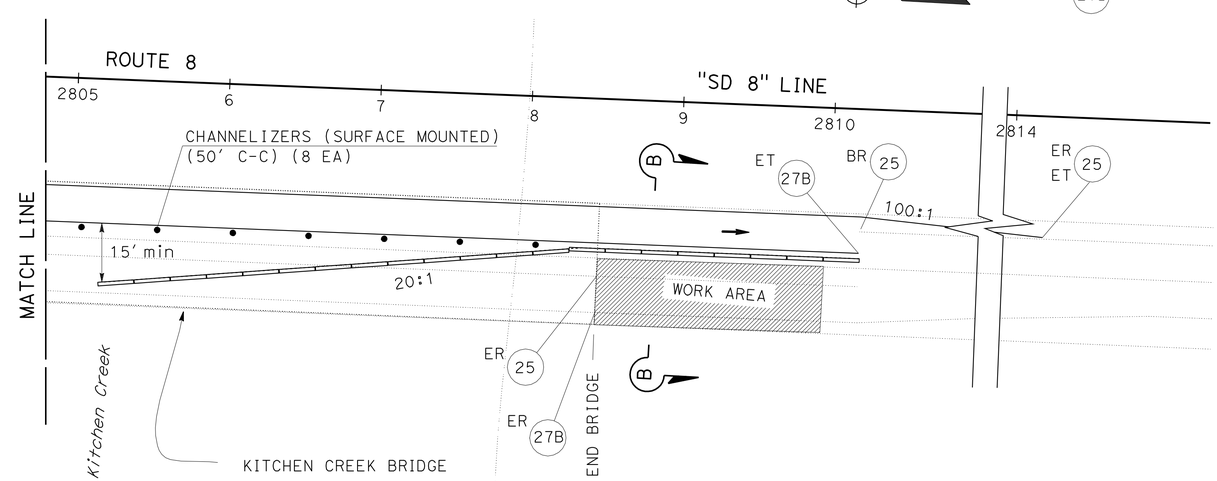

STAGE 2
EASTBOUND

THIS PLAN ACCURATE FOR STAGE CONSTRUCTION WORK ONLY

STAGE CONSTRUCTION

SCALE: 1" = 50'

SC-3

REVISED BY	DATE REVISED

CALCULATED-DESIGNED BY	CHECKED BY
ANH NGUYEN	TOM GUERRINI

FUNCTIONAL SUPERVISOR: ED HAJJ

STATE OF CALIFORNIA - DEPARTMENT OF TRANSPORTATION
Caltrans
DESIGN

LAST REVISION 01-13-11 | DATE PLOTTED => 07-FEB-2011 | TIME PLOTTED => 16:03

Dist	COUNTY	ROUTE	POST MILES TOTAL PROJECT	SHEET No.	TOTAL SHEETS
11	SD	8	R39.7/R61.5	28	71

Thomas M. Guerrini 01-07-11
REGISTERED CIVIL ENGINEER DATE

01-18-11
PLANS APPROVAL DATE

REGISTERED PROFESSIONAL ENGINEER THOMAS M. GUERRINI No. 65539 Exp. 09-30-11 CIVIL STATE OF CALIFORNIA

THE STATE OF CALIFORNIA OR ITS OFFICERS OR AGENTS SHALL NOT BE RESPONSIBLE FOR THE ACCURACY OR COMPLETENESS OF SCANNED COPIES OF THIS PLAN SHEET.

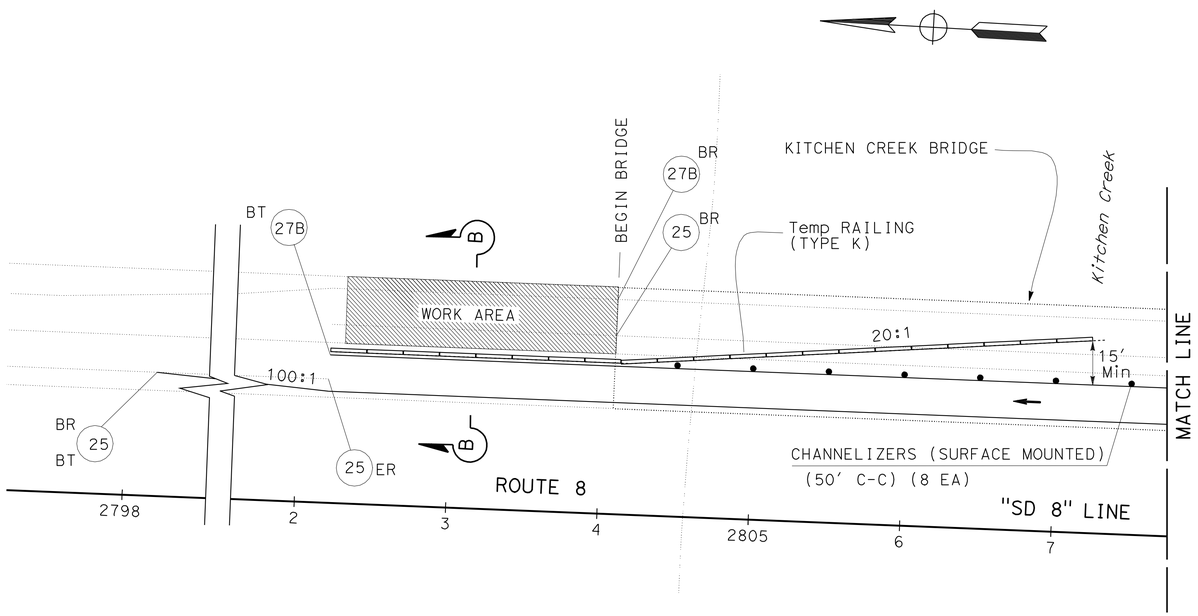

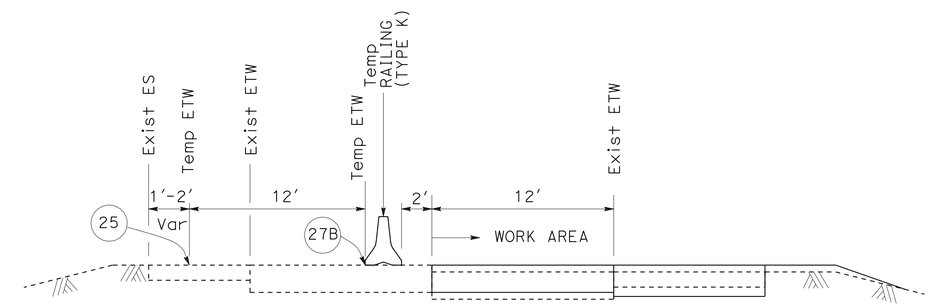

SECTION B-B
NO SCALE

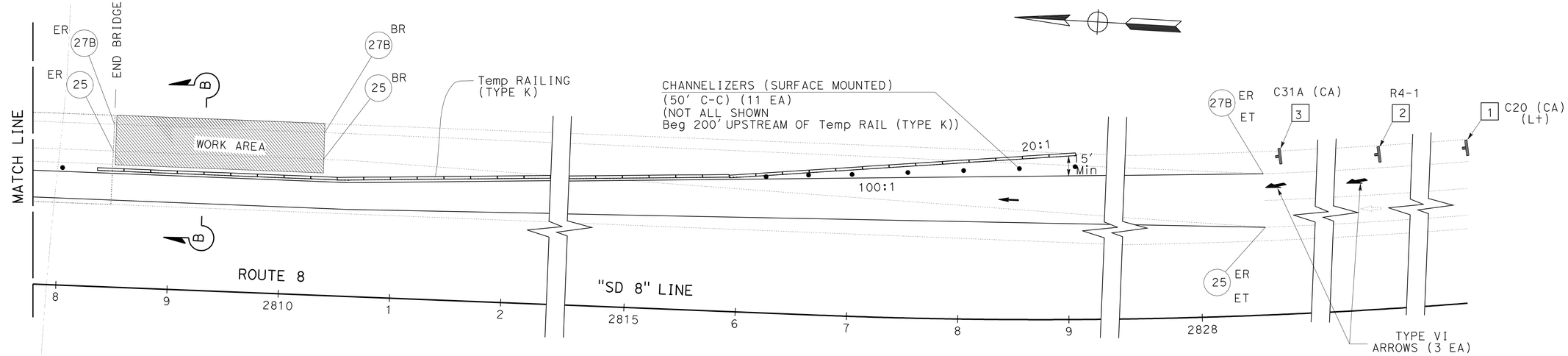

STAGE 2

WESTBOUND

THIS PLAN ACCURATE FOR STAGE CONSTRUCTION WORK ONLY

STAGE CONSTRUCTION

SCALE: 1" = 50′

SC-4

STATE OF CALIFORNIA - DEPARTMENT OF TRANSPORTATION
Caltrans
DESIGN

FUNCTIONAL SUPERVISOR: ED HAJJ
CALCULATED-DESIGNED BY: ANH NGUYEN
CHECKED BY: YUSUF RAHMAN
REVISED BY
DATE REVISED

LAST REVISION 01-13-11
DATE PLOTTED => 07-FEB-2011
TIME PLOTTED => 16:03

Dist	COUNTY	ROUTE	POST MILES TOTAL PROJECT	SHEET No.	TOTAL SHEETS
11	SD	8	R39.7/R61.5	29	71

Thomas M. Guerrini 01-07-11
REGISTERED CIVIL ENGINEER DATE

01-18-11
PLANS APPROVAL DATE

REGISTERED PROFESSIONAL ENGINEER THOMAS M. GUERRINI No. 65539 Exp. 09-30-11 CIVIL STATE OF CALIFORNIA

THE STATE OF CALIFORNIA OR ITS OFFICERS OR AGENTS SHALL NOT BE RESPONSIBLE FOR THE ACCURACY OR COMPLETENESS OF SCANNED COPIES OF THIS PLAN SHEET.

TRAFFIC HANDLING QUANTITIES

LOCATION				TEMPORARY RAILING (TYPE K)	CHANNELIZERS (SURFACE MOUNTED)	TEMPORARY PAVEMENT MARKING	REMOVE PAINTED PAVEMENT MARKING
STAGE	DIRECTION	STATION BEGIN	STATION END	(LF)	(EA)	(SQFT)	(SQFT)
1	EB	2796+00.00	2804+40.00	840	19	126 (TYPE VI ARROWS)	126
		2805+60.00	2810+20.00	460	8		
	WB	2802+20.00	2806+80.00	460	8	126 (TYPE VI ARROWS)	126
		2808+20.00	2816+20.00	800	17		
2	EB	2794+50.00	2804+40.00	990	8	126 (TYPE VI ARROWS)	126
		2805+20.00	2810+20.00	500	8		
	WB	2802+20.00	2807+40.00	520	8	126 (TYPE VI ARROWS)	126
		2808+20.00	2819+00.00	1,080	11		
TOTAL				5,650	87	504	504

CONSTRUCTION AREA SIGNS

SIGN No.	CODE	PANEL SIZE INCHES	No. OF POST AND SIZE	No. OF SIGNS
1	C20 (CA)	48 X 48	PORTABLE	4
2	R4-1	48 X 48	PORTABLE	4
3	C31A (CA)	48 X 48	PORTABLE	4
			TOTAL	12*

* SEE "CS" SHEETS FOR ADDITIONAL QUANTITIES.

LOCATION				DETAIL No.	TEMPORARY PAVEMENT MARKER TYPE C Red-Clear (EA)	TYPE G Clear (EA)	TYPE H Yellow (EA)	TEMPORARY TRAFFIC STRIPE (PAINT) (LF)	REMOVE PAINTED TRAFFIC STRIPE EXISTING (LF)	TEMPORARY (LF)	REMOVE YELLOW PAINTED TRAFFIC STRIPE (HAZARDOUS WASTE) (LF)	REMOVE PAVEMENT MARKER (N) (EA)
STAGE	DIRECTION	STATION BEGIN	STATION END									
1	EB	2785+00.00	2803+12.00	12					453			39
		2804+11.00	2808+47.00	12					108			10
		2785+00.00	2803+12.00	25							1,812	39
		2804+11.00	2808+47.00	25 Mod					436		436	10
		2785+00.00	2810+20.00	25			54	2,520				
		2785+00.00	2804+11.00	27B					1,911			
		2804+11.00	2808+47.00	27B Mod					872			
		2808+47.00	2816+20.00	27B					773			
		2785+00.00	2816+20.00	27B				3,120				
	WB	2804+08.00	2808+47.00	12					110			10
		2810+36.00	2828+60.00	12					456			39
		2804+08.00	2808+47.00	25 Mod					439		439	10
		2810+36.00	2828+60.00	25							1,824	39
		2802+20.00	2828+60.00	25			56	2,640				
		2796+20.00	2804+08.00	27B					788			
		2804+08.00	2808+47.00	27B Mod					878			
		2808+47.00	2828+60.00	27B					2,013			
		2796+20.00	2828+60.00	27B				3,240				
2	EB	2785+00.00	2803+12.00	25						1,812		39
		2804+11.00	2808+47.00	25						436		10
		2810+20.00	2814+20.00	25					400			9
		2785+00.00	2814+20.00	25			62	2,920		2,920 *		62
		2785+00.00	2803+12.00	27B						1,812		
		2804+11.00	2808+47.00	27B						436		
		2810+00.00	2816+20.00	27B						620 *		
		2785+00.00	2810+20.00	27B				2,520		2,520 *		
	WB	2798+20.00	2802+20.00	25					400			9
		2804+08.00	2808+47.00	25						439		10
		2810+36.00	2828+60.00	25						1,824		39
		2798+20.00	2828+60.00	25			64	3,040		3,040 *		64
		2804+08.00	2808+47.00	27B						439		
		2810+36.00	2828+60.00	27B						1,824		
		2802+20.00	2828+60.00	27B				2,640		2,640 *		
		2796+20.00	2802+40.00	27B						620 *		
SUB TOTAL							236	22,640	10,037	21,382	4,511	438
TOTAL					236			22,640	31,419		4,511	

(N) = NOT A SEPARATE PAY ITEM, FOR INFORMATION ONLY.
* REMOVE TEMPORARY PAINTED TRAFFIC STRIPE WHEN STAGE 2 COMPLETED

STAGE CONSTRUCTION QUANTITIES

SCQ-1

REVISED BY | DATE REVISED
ANH NGUYEN | THANH NGUYEN
CALCULATED-DESIGNED BY | CHECKED BY
FUNCTIONAL SUPERVISOR: ED HAJJ
STATE OF CALIFORNIA - DEPARTMENT OF TRANSPORTATION
Caltrans
DESIGN

LAST REVISION 01-13-11 | DATE PLOTTED => 07-FEB-2011 | TIME PLOTTED => 16:03

Dist	COUNTY	ROUTE	POST MILES TOTAL PROJECT	SHEET No.	TOTAL SHEETS
11	SD	8	R39.7/R61.5	30	71

REGISTERED CIVIL ENGINEER 01-06-11 DATE

01-18-11
PLANS APPROVAL DATE

REGISTERED PROFESSIONAL ENGINEER SHAHIN T ADIBI No. 54839 Exp. 06-30-12 CIVIL STATE OF CALIFORNIA

THE STATE OF CALIFORNIA OR ITS OFFICERS OR AGENTS SHALL NOT BE RESPONSIBLE FOR THE ACCURACY OR COMPLETENESS OF SCANNED COPIES OF THIS PLAN SHEET.

NOTES:

1. EXACT LOCATION OF CONSTRUCTION AREA SIGNS WILL BE DETERMINED BY THE ENGINEER.
2. FEDERAL MANUAL ON UNIFORM TRAFFIC CONTROL DEVICES (MUTCD) SIGN CODES ARE SHOWN UNLESS DESIGNATED BY (CA), INDICATING CALIFORNIA MUTCD.
3. ROTATE ARROW ON SC9 (CA) PANEL TO REFLECT DIRECTION OF DETOUR.
4. SEE CONSTRUCTION AREA SIGN PLAN FOR ADDITIONAL CONSTRUCTION AREA SIGNS.
5. EXISTING UTILITIES ARE NOT SHOWN ON THESE PLAN SHEETS. THE CONTRACTOR SHALL VERIFY LOCATIONS OF EXISTING UTILITIES AND ADJUST THE FIELD LOCATION OF THE SIGN POSTS IN CONSULTATION WITH THE ENGINEER.

LEGEND

XX = CONSTRUCTION AREA SIGNS

SPCL = SPECIAL CONSTRUCTION AREA SIGN

Caps = CAPITAL LETTERING

→ = DETOUR DIRECTION OF TRAVEL

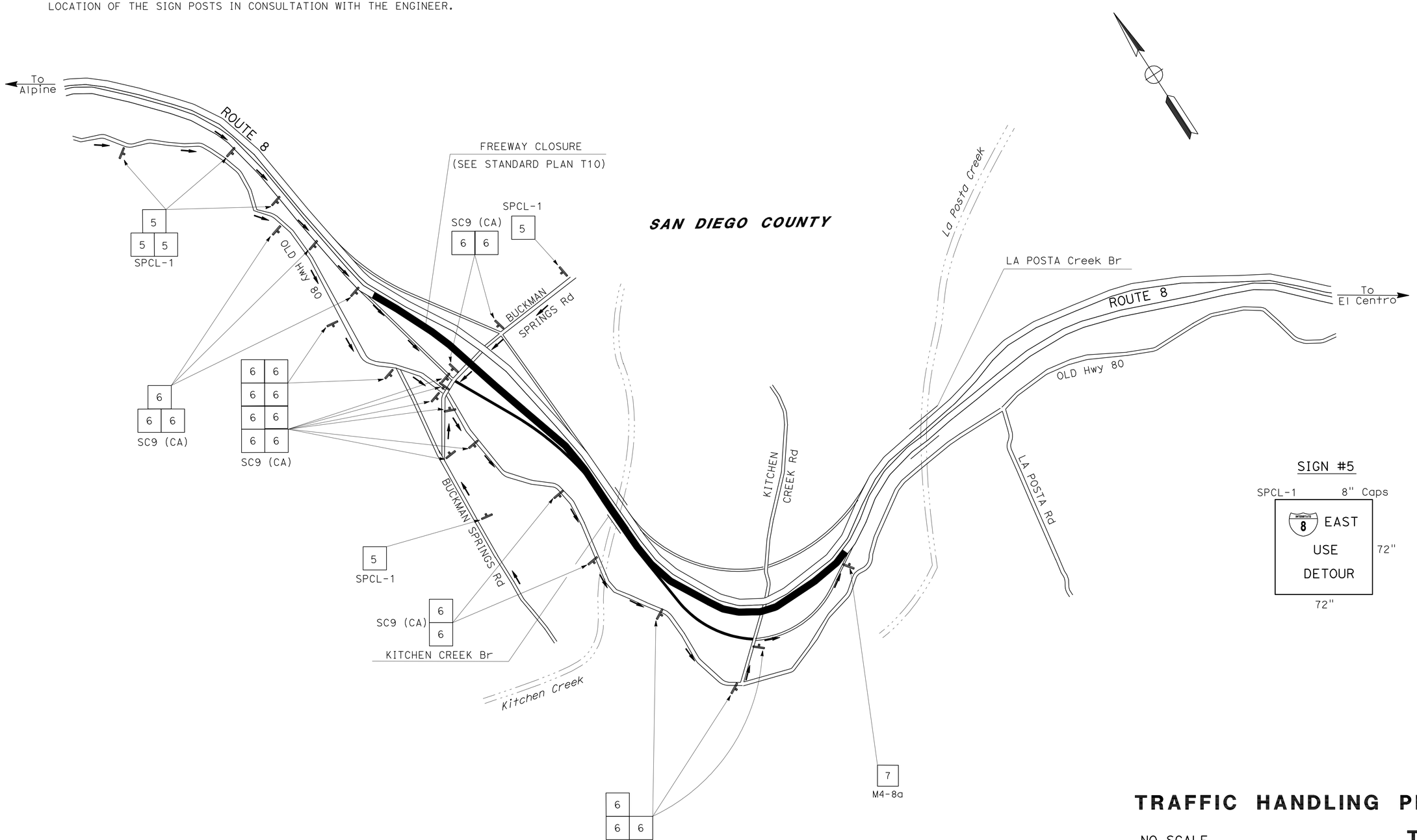

SIGN #5

SPCL-1 8" Caps

INTERSTATE 8 EAST USE DETOUR

72" 72"

THIS PLAN ACCURATE FOR TRAFFIC HANDLING WORK ONLY.

TRAFFIC HANDLING PLAN

NO SCALE

TH-1

STATE OF CALIFORNIA - DEPARTMENT OF TRANSPORTATION

Caltrans® TRAFFIC DESIGN

FUNCTIONAL SUPERVISOR: CAMILLE ABOUFADEL

CALCULATED-DESIGNED BY: THANH NGUYEN

CHECKED BY: SHAHIN T ADIBI

REVISED BY

DATE REVISED

LAST REVISION 01-14-11

DATE PLOTTED => 07-FEB-2011

TIME PLOTTED => 16:03

Dist	COUNTY	ROUTE	POST MILES TOTAL PROJECT	SHEET No.	TOTAL SHEETS
11	SD	8	R39.7/R61.5	31	71

01-06-11
REGISTERED CIVIL ENGINEER DATE

01-18-11
PLANS APPROVAL DATE

REGISTERED PROFESSIONAL ENGINEER
SHAHIN T ADIBI
No. 54839
Exp. 06-30-12
CIVIL
STATE OF CALIFORNIA

THE STATE OF CALIFORNIA OR ITS OFFICERS OR AGENTS SHALL NOT BE RESPONSIBLE FOR THE ACCURACY OR COMPLETENESS OF SCANNED COPIES OF THIS PLAN SHEET.

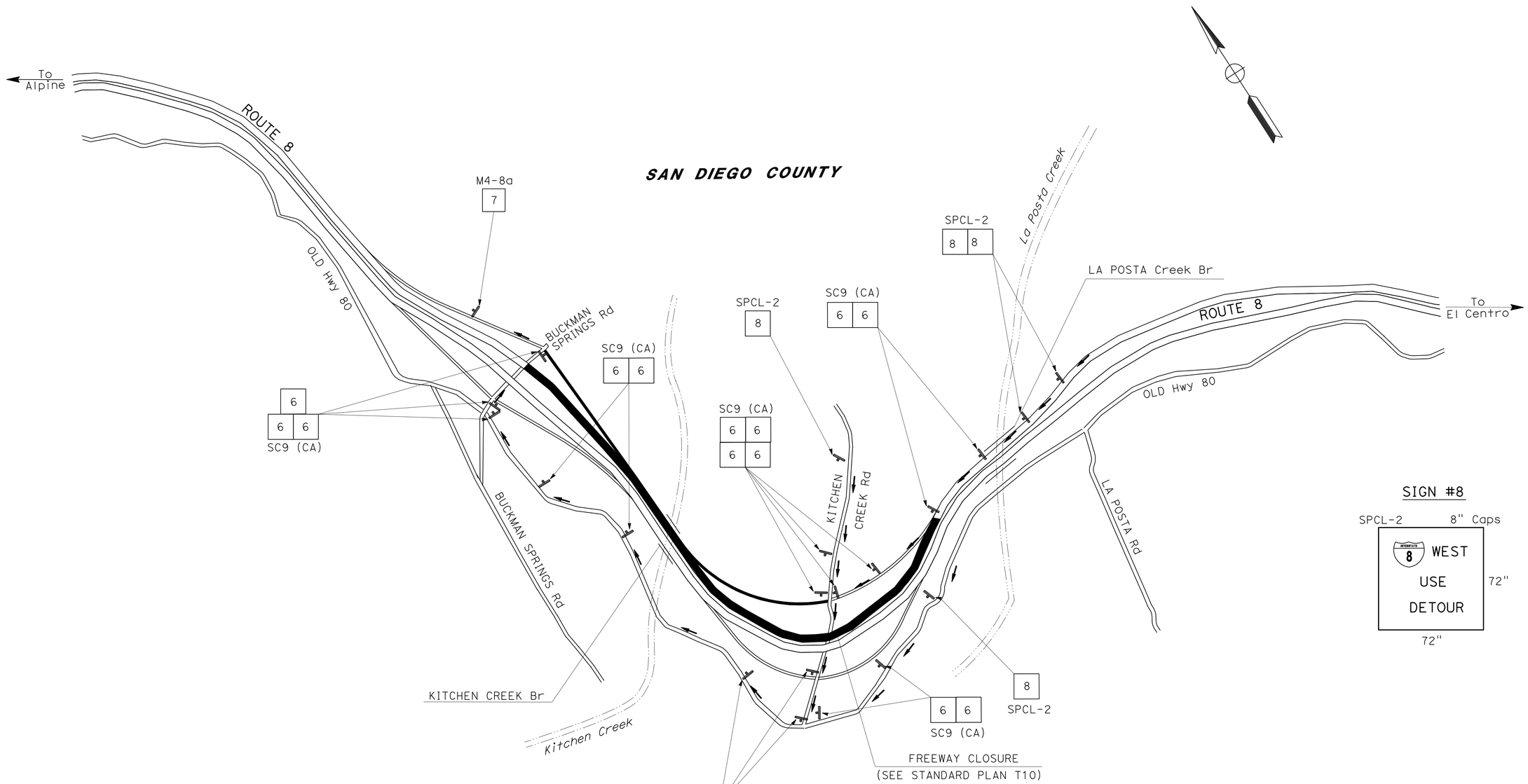

THIS PLAN ACCURATE FOR TRAFFIC HANDLING WORK ONLY.

TRAFFIC HANDLING PLAN

NO SCALE

TH-2

REVISED BY	DATE REVISED

THANH NGUYEN
SHAHIN T ADIBI
CALCULATED-DESIGNED BY
CHECKED BY
FUNCTIONAL SUPERVISOR
CAMILLE ABOUFADEL

STATE OF CALIFORNIA - DEPARTMENT OF TRANSPORTATION
Caltrans
TRAFFIC DESIGN

LAST REVISION 01-14-11
DATE PLOTTED => 07-FEB-2011
TIME PLOTTED => 16:03

Dist	COUNTY	ROUTE	POST MILES TOTAL PROJECT	SHEET No.	TOTAL SHEETS
11	SD	8	R39.7/R61.5	32	71

01-06-11
REGISTERED CIVIL ENGINEER DATE

01-18-11
PLANS APPROVAL DATE

REGISTERED PROFESSIONAL ENGINEER
SHAHIN T ADIBI
No. 54839
Exp. 06-30-12
CIVIL
STATE OF CALIFORNIA

THE STATE OF CALIFORNIA OR ITS OFFICERS OR AGENTS SHALL NOT BE RESPONSIBLE FOR THE ACCURACY OR COMPLETENESS OF SCANNED COPIES OF THIS PLAN SHEET.

NOTE: FOR ADDITIONAL INFORMATION, SEE STANDARD PLANS A20A AND A20B.

DETAIL 25(6")

TYPICAL

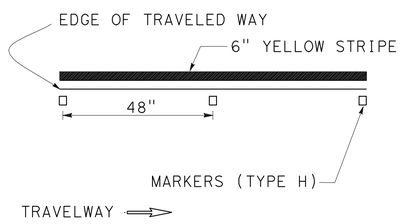

DETAIL 27B(6")

TYPICAL

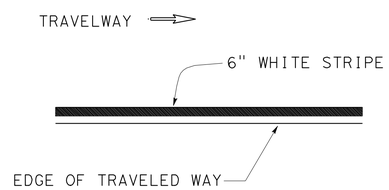

DETAIL 25(6") Mod

TYPICAL

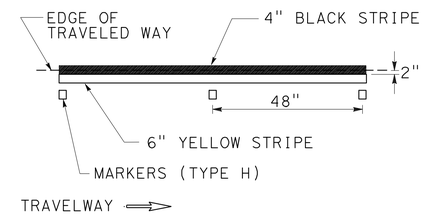

DETAIL 27B(6") Mod

TYPICAL

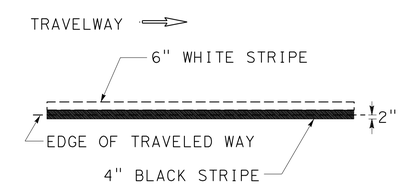

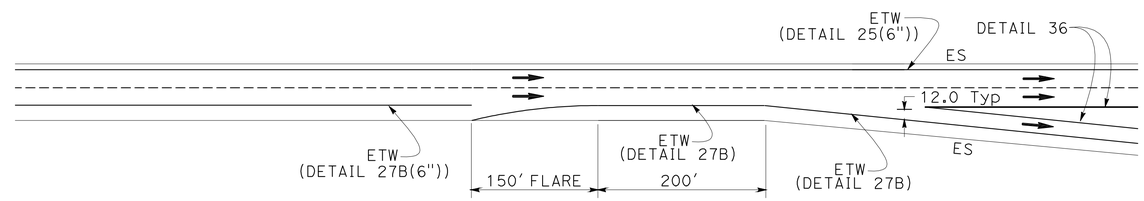

RIGHT EDGELINE FLARE DETAIL

(FOR USE ON ALL EXIT RAMPS EXCEPT WHERE LANE(S) TRAP OFF)

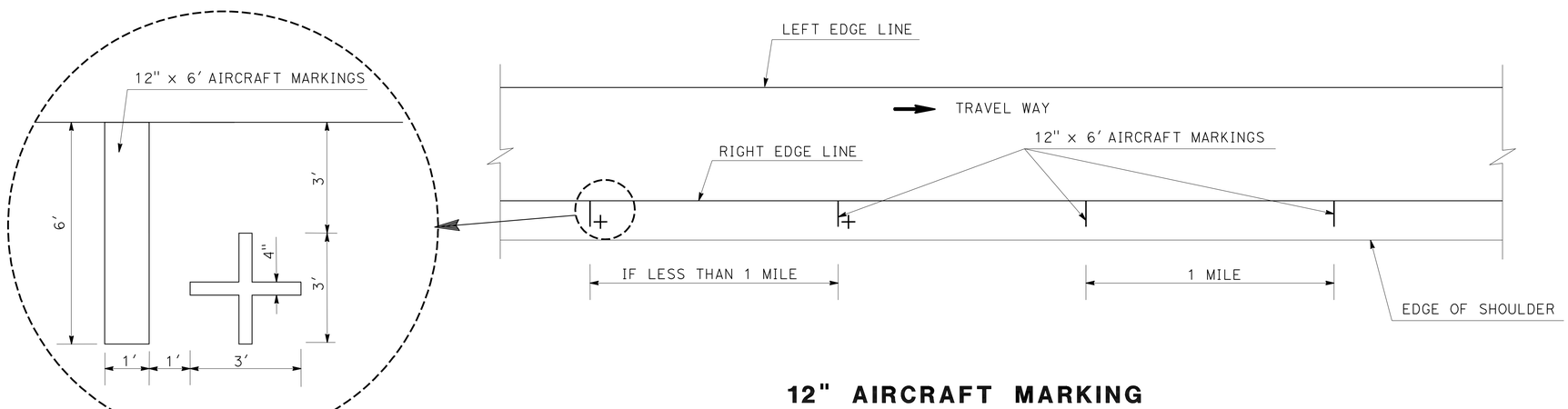

12" AIRCRAFT MARKING

PAVEMENT DELINEATION DETAILS

NO SCALE

PDD-1

REVISED BY	DATE REVISED
ANH NGUYEN	THANH NGUYEN
CALCULATED-DESIGNED BY	CHECKED BY
FUNCTIONAL SUPERVISOR	CAMILLE ABOU-FADEL

STATE OF CALIFORNIA - DEPARTMENT OF TRANSPORTATION
Caltrans® TRAFFIC DESIGN

LAST REVISION 01-14-11 | DATE PLOTTED => 07-FEB-2011 | TIME PLOTTED => 16:03

Dist	COUNTY	ROUTE	POST MILES TOTAL PROJECT	SHEET No.	TOTAL SHEETS
11	SD	8	R39.7/R61.5	33	71

REGISTERED CIVIL ENGINEER 01-06-11 DATE

01-18-11
PLANS APPROVAL DATE

REGISTERED PROFESSIONAL ENGINEER SHAHIN T ADIBI No. 54839 Exp. 06-30-12 CIVIL STATE OF CALIFORNIA

THE STATE OF CALIFORNIA OR ITS OFFICERS OR AGENTS SHALL NOT BE RESPONSIBLE FOR THE ACCURACY OR COMPLETENESS OF SCANNED COPIES OF THIS PLAN SHEET.

NOTES: 1. PAVEMENT DELINEATION SHALL BE REPLACED IN-KIND.
2. DETAILS 25 AND 27B SHALL BE REPLACED 6" WIDE ON MAIN LANES (SEE PAVEMENT DELINEATION DETAILS).

DIRECTION	LOCATION	DETAIL No.	PAVEMENT MARKER SUMMARY (RETROREFLECTIVE-RECESSED) (EA) TYPE C RED-CLEAR	TYPE G CLEAR	TYPE H YELLOW	TRAFFIC STRIPE SUMMARY PAINT (2-COAT) (LF) 4"	6"	THERMOPLASTIC LF 8"-WHITE	REMARKS
EB	MAIN LANES	11				1,211			REPLACE IN KIND
		12		2,291		109,935			REPLACE IN KIND
		25(6")			2,056		98,652		REPLACE 6" WIDE
		25(6") Mod			91		4,324		REPLACE 6" WIDE
		27B(6")					98,652		REPLACE 6" WIDE
		27B(6") Mod					4,324		REPLACE 6" WIDE
		36		61				1,438	REPLACE IN KIND
	PINE VALLEY OFF RAMP	25A			52	1,212			
		27B				1,232			
		36		13				282	
		38		4				70	
		38A						30	
	PINE VALLEY ON RAMP	25A			44	1,032			
		27B				1,425			
		36A		18				400	
	OLD Hwy 80 OFF RAMP	9		18		815			
		25A			62	1,457			
		27B				1,500			
		36		12				265	
		38		6				116	
		38A						34	
		38B		16				152	
	OLD Hwy 80 ON RAMP	25A			40	940			
		27B				1,265			
		36A		14				318	
	BUCKMAN SPRINGS Rd OFF RAMP	25A			48	1,125			
		27B				1,400			
		36		12				274	
		38		4				80	
		38A						18	
	BUCKMAN SPRINGS Rd ON RAMP	25A			49	1,140			
		27B				1,420			
		36A		13				282	
	KITCHEN CREEK Rd OFF RAMP	25A			77	1,822			
		27B				1,850			
		36		13				276	
		38		4				68	
		38A						31	
	KITCHEN CREEK Rd ON RAMP	25A			71	1,675			
		27B				1,740			
		36A		13				290	
	CRESTWOOD Rd OFF RAMP	25A			40	925			
		27B				960			
		36		15				340	
	CRESTWOOD Rd ON RAMP	25A			38	890			
		27B				1,280			
		36A		16				365	
SUBTOTAL			5,211			138,251	205,952	5,129	

PAVEMENT DELINEATION QUANTITIES

PDQ-1

STATE OF CALIFORNIA - DEPARTMENT OF TRANSPORTATION
Caltrans® TRAFFIC DESIGN

FUNCTIONAL SUPERVISOR: CAMILLE ABOUFADEL
CALCULATED-DESIGNED BY: ANH NGUYEN
CHECKED BY: THANH NGUYEN
REVISED BY
DATE REVISED

LAST REVISION 01-14-11
DATE PLOTTED => 07-FEB-2011
TIME PLOTTED => 16:03

Dist	COUNTY	ROUTE	POST MILES TOTAL PROJECT	SHEET No.	TOTAL SHEETS
11	SD	8	R39.7/R61.5	34	71

REGISTERED CIVIL ENGINEER 01-06-11 DATE

01-18-11
PLANS APPROVAL DATE

REGISTERED PROFESSIONAL ENGINEER
SHAHIN T ADIBI
No. 54839
Exp. 06-30-12
CIVIL
STATE OF CALIFORNIA

THE STATE OF CALIFORNIA OR ITS OFFICERS OR AGENTS SHALL NOT BE RESPONSIBLE FOR THE ACCURACY OR COMPLETENESS OF SCANNED COPIES OF THIS PLAN SHEET.

DIRECTION	LOCATION	DETAIL No.	PAVEMENT MARKER SUMMARY (RETROREFLECTIVE-RECESSED) (EA) TYPE C RED-CLEAR	TYPE G CLEAR	TYPE H YELLOW	TRAFFIC STRIPE SUMMARY PAINT (2-COAT) (LF) 4"	6"	THERMOPLASTIC (LF) 8"-WHITE	REMARKS
WB	MAIN LANES	11				1,139			REPLACE IN KIND
		12		2,279		109,354			REPLACE IN KIND
		25(6")			2,060		98,852		REPLACE 6" WIDE
		25(6") Mod			87		4,124		REPLACE 6" WIDE
		27B(6")					98,852		REPLACE 6" WIDE
		27B(6") Mod					4,124		REPLACE 6" WIDE
		36		58				1,367	REPLACE IN KIND
	PINE VALLEY ON RAMP	25A			59	1,403			
		27B				1,818			
		36A		15				342	
	PINE VALLEY OFF RAMP	25A			51	1,210			
		27B				1,225			
		36		13				285	
		38		3				48	
		38A						18	
	OLD Hwy 80 ON RAMP	25A			51	1,198			
		27B				1,642			
		36A		13				289	
	OLD Hwy 80 OFF RAMP	9		31		1,424			
		25A			83	1,972			
		27B				2,000			
		36		15				330	
		38		7				142	
		38A						38	
	BUCKMAN SPRINGS Rd ON RAMP	25A			59	1,380			
		27B				1,600			
		36A		10				220	
	BUCKMAN SPRINGS Rd OFF RAMP	25A			57	1,340			
		27B				1,360			
		36		11				240	
		38		6				115	
		38A						30	
	KITCHEN CREEK Rd ON RAMP	25A			52	1,225			
		27B				1,550			
		36A		13				290	
	KITCHEN CREEK Rd OFF RAMP	25A			36	840			
		27B				852			
		36		12				256	
		38		4				77	
		38A						33	
	CRESTWOOD Rd ON RAMP	25A			46	1,068			
		27B				750			
		36A		15				330	
	CRESTWOOD Rd OFF RAMP	25A			35	815			
		27B				890			
		36		13				295	
		38		4				72	
		38A						27	
SUBTOTAL			5,198			138,055	205,952	4,844	
TOTAL			10,409			688,210		9,973	

PAVEMENT DELINEATION QUANTITIES

PDQ-2

STATE OF CALIFORNIA - DEPARTMENT OF TRANSPORTATION
Caltrans® TRAFFIC DESIGN

FUNCTIONAL SUPERVISOR: CAMILLE ABOUFADEL
CALCULATED-DESIGNED BY: ANH NGUYEN
CHECKED BY: THANH NGUYEN
REVISED BY
DATE REVISED

LAST REVISION 01-14-11
DATE PLOTTED => 07-FEB-2011
TIME PLOTTED => 16:04

Dist	COUNTY	ROUTE	POST MILES TOTAL PROJECT	SHEET No.	TOTAL SHEETS
11	SD	8	R39.7/R61.5	35	71

REGISTERED CIVIL ENGINEER 01-06-11 DATE

01-18-11
PLANS APPROVAL DATE

REGISTERED PROFESSIONAL ENGINEER
SHAHIN T ADIBI
No. 54839
Exp. 06-30-12
CIVIL
STATE OF CALIFORNIA

THE STATE OF CALIFORNIA OR ITS OFFICERS OR AGENTS SHALL NOT BE RESPONSIBLE FOR THE ACCURACY OR COMPLETENESS OF SCANNED COPIES OF THIS PLAN SHEET.

MILEPOST MARKER

DIRECTION	POSTMILE	Qty (EA)
EB	R41.5	1
	R42.5	1
	R43.5	1
	R44.5	1
	R45.5	1
	R47.5	1
WB	R47.0	1
	R48.0	1
	R49.0	1
	R50.0	1
	R51.0	1
	TOTAL	11

THERMOPLASTIC PAVEMENT MARKING

DIRECTION	LOCATION	CROSSWALK AND LIMIT LINE (1') SQFT	STOP SQFT	AHEAD SQFT	TYPE I 24'-0" ARROW SQFT	TYPE III (L) ARROW SQFT	TYPE III (R) ARROW SQFT	TYPE V ARROW SQFT	TYPE VI ARROW SQFT	AIRCRAFT MARKING SQFT	REMARKS
EB	MAIN LANES								126	274	3 TYPE VI ARROWS @ PM R41.2
	PINE VALLEY OFF RAMP	38	66	31				132			PLACE 1 TYPE V ARROW @ PM R43.4
	PINE VALLEY ON RAMP				93						
	OLD Hwy 80 OFF RAMP	66	88	62		84	84	132			PLACE 2 TYPE V ARROWS @ PM R44.7
	OLD Hwy 80 ON RAMP				93						
	BUCKMAN SPRINGS Rd OFF RAMP	46	66	31		42	42	66			PLACE 1 TYPE V ARROW @ PM R48.7
	BUCKMAN SPRINGS Rd ON RAMP				31						
	KITCHEN CREEK Rd OFF RAMP	42	66	31				132			PLACE 1 TYPE V ARROW @ PM R51.8
	KITCHEN CREEK Rd ON RAMP				62						
	CRESTWOOD Rd OFF RAMP	45	66	31				99			PLACE 1 TYPE V ARROW @ PM R60.1
	CRESTWOOD Rd ON RAMP				31						
WB	MAIN LANES								126	308	3 TYPE VI ARROWS @ PM R40.0
	PINE VALLEY ON RAMP				93						
	PINE VALLEY OFF RAMP	52	66	31				132			PLACE 1 TYPE V ARROW @ PM R43.7
	OLD Hwy 80 ON RAMP				93						
	OLD Hwy 80 OFF RAMP	52	88	62		84	84	132			PLACE 2 TYPE V ARROWS @ PM R45.2
	BUCKMAN SPRINGS Rd ON RAMP				31						
	BUCKMAN SPRINGS Rd OFF RAMP	43	66	31		42	42	66			PLACE 1 TYPE V ARROW @ PM R49.0
	KITCHEN CREEK Rd ON RAMP				62						
	KITCHEN CREEK Rd OFF RAMP	49	66	31				132			PLACE 1 TYPE V ARROW @ PM R52.2
	CRESTWOOD Rd ON RAMP				93						
	CRESTWOOD Rd OFF RAMP	41	66	31				132			PLACE 1 TYPE V ARROW @ PM R61.3
	SUB-TOTAL	474	704	372	682	252	252	1155	252	582	
	TOTAL	4473									

PAVEMENT DELINEATION QUANTITIES

PDQ-3

REVISED BY | DATE REVISED
ANH NGUYEN | THANH NGUYEN
CALCULATED-DESIGNED BY | CHECKED BY
FUNCTIONAL SUPERVISOR: CAMILLE ABOUFADEL

STATE OF CALIFORNIA - DEPARTMENT OF TRANSPORTATION
Caltrans
TRAFFIC DESIGN

LAST REVISION 01-14-11 | DATE PLOTTED => 07-FEB-2011 | TIME PLOTTED => 16:04

Dist	COUNTY	ROUTE	POST MILES TOTAL PROJECT	SHEET No.	TOTAL SHEETS
11	SD	8	R39.7/R61.5	36	71

Thomas M. Guerrini 01-07-11
REGISTERED CIVIL ENGINEER DATE

01-18-11
PLANS APPROVAL DATE

REGISTERED PROFESSIONAL ENGINEER THOMAS M. GUERRINI No. 65539 Exp. 09-30-11 CIVIL STATE OF CALIFORNIA

THE STATE OF CALIFORNIA OR ITS OFFICERS OR AGENTS SHALL NOT BE RESPONSIBLE FOR THE ACCURACY OR COMPLETENESS OF SCANNED COPIES OF THIS PLAN SHEET.

ROADWAY QUANTITIES

LOCATION			LENGTH	TRAVELED WAY WIDTH	GRIND Exist Conc Pvmt	SHOULDER WIDTH		MAINLANE Shld AREA	RAMP AREA	GORE AREA	COLD PLANE AC Pvmt	HOT MIX ASPHALT (TYPE A)	TACK COAT	ASPHALTIC EMULSION (FOG SEAL COAT)	DESCRIPTION
						INSIDE	OUTSIDE								
DIRECTION	FROM PM	TO PM	LF (N)	LF (N)	SQYD	LF (N)		SQFT (N)	SQFT (N)	SQFT (N)	SQYD	TON	TON	TON	
EB	39.70	40.83	5,989.20	36.00	23,956.80	8.00	10.00	107,805.60			11,978.40	798.56	2.84	3.79	
	40.83	40.86	BRIDGE	BRIDGE	BRIDGE	BRIDGE	BRIDGE	BRIDGE			BRIDGE	BRIDGE	BRIDGE	BRIDGE	LAS BLANCAS Rd UC
	40.86	41.27	2,167.24	36.00	8,668.95	8.00	10.00	39,010.27			4,334.47	288.96	1.03	1.37	
	41.27	41.69	2,240.40	24.00	5,974.40	8.00	10.00	40,327.20			4,480.80	298.72	1.06	1.42	
	41.69	42.04	BRIDGE	BRIDGE	BRIDGE	BRIDGE	BRIDGE	BRIDGE			BRIDGE	BRIDGE	BRIDGE	BRIDGE	PINE VALLEY CREEK Br
	42.04	43.08	5,538.06	24.00	14,768.16	8.00	10.00	99,685.05			11,076.12	738.41	2.63	3.50	
	43.08	43.12	BRIDGE	BRIDGE	BRIDGE	BRIDGE	BRIDGE	BRIDGE			BRIDGE	BRIDGE	BRIDGE	BRIDGE	CORTE MADERA Rd UC
	43.12	43.53	2,167.05	24.00	5,778.80	8.00	10.00	39,006.90			4,334.10	288.94	1.03	1.37	
	43.53	43.57	BRIDGE	BRIDGE	BRIDGE	BRIDGE	BRIDGE	BRIDGE			BRIDGE	BRIDGE	BRIDGE	BRIDGE	PINE VALLEY Rd UC
	43.57	45.78	11,680.89	24.00	31,149.05	8.00	10.00	210,256.06			23,361.78	1,557.45	5.54	7.39	
	45.78	45.81	BRIDGE	BRIDGE	BRIDGE	BRIDGE	BRIDGE	BRIDGE			BRIDGE	BRIDGE	BRIDGE	BRIDGE	UN GALLO Rd UC
	45.81	48.83	15,962.96	24.00	42,567.90	8.00	10.00	287,333.34			31,925.93	2,128.40	7.57	10.10	
	48.83	48.87	BRIDGE	BRIDGE	BRIDGE	BRIDGE	BRIDGE	BRIDGE			BRIDGE	BRIDGE	BRIDGE	BRIDGE	BUCKMAN SPRINGS UC
	48.87	50.63	9,321.95	24.00	24,858.54	8.00	10.00	167,795.15			18,643.91	1,242.93	4.42	5.90	
	50.63	50.73	BRIDGE	BRIDGE	BRIDGE	BRIDGE	BRIDGE	BRIDGE			BRIDGE	BRIDGE	BRIDGE	BRIDGE	KITCHEN CREEK Br
	50.73	51.97	6,575.24	24.00	17,533.97	8.00	10.00	118,354.31			13,150.48	876.70	3.12	4.16	
	51.97	52.02	BRIDGE	BRIDGE	BRIDGE	BRIDGE	BRIDGE	BRIDGE			BRIDGE	BRIDGE	BRIDGE	BRIDGE	CAMERON STATION UC
	52.02	56.77	12,991.96	24.00	34,645.22	8.00	10.00	233,855.24			25,983.92	1,732.26	6.16	8.22	
	56.77	57.03	BRIDGE	BRIDGE	BRIDGE	BRIDGE	BRIDGE	BRIDGE			BRIDGE	BRIDGE	BRIDGE	BRIDGE	LA POSTA CREEK Br
	57.03	61.14	21,738.67	24.00	57,969.77	8.00	10.00	391,295.98			43,477.33	2,898.49	10.31	13.75	
	61.14	61.18	BRIDGE	BRIDGE	BRIDGE	BRIDGE	BRIDGE	BRIDGE			BRIDGE	BRIDGE	BRIDGE	BRIDGE	CRESTWOOD Rd UC
	61.18	61.30	617.97	24.00	1,647.92	8.00	10.00	11,123.48			1,235.94	82.40	0.29	0.39	
	61.30	61.50	1,056.00			8.00	10.00	19,008.00			2,112.00	140.80	0.50	0.67	HMA MAIN LANES
	41.20	41.50	1,584.00				5.00	7,920.00			880.00	58.67	0.21	0.28	ADDITIONAL WIDTH FOR 15 ft SHOULDER
	42.70	43.05	1,848.00				5.00	9,240.00			1,026.67	68.44	0.24	0.32	ADDITIONAL WIDTH FOR 15 ft SHOULDER
	47.60	48.10	2,640.00				5.00	13,200.00			1,466.67	97.78	0.35	0.46	ADDITIONAL WIDTH FOR 15 ft SHOULDER
	48.90	49.05	792.00				10.00	7,920.00			880.00	58.67	0.21	0.28	ADDITIONAL WIDTH FOR 20 ft SHOULDER
	50.80	51.30	2,640.00				5.00	13,200.00			1,466.67	97.78	0.35	0.46	ADDITIONAL WIDTH FOR 15 ft SHOULDER
	51.30	51.50	1,056.00				15.00	15,840.00			1,760.00	117.33	0.42	0.56	ADDITIONAL WIDTH FOR 25 ft SHOULDER
	59.70	59.95	1,320.00				5.00	6,600.00			733.33	48.89	0.17	0.23	ADDITIONAL WIDTH FOR 15 ft SHOULDER
	43.25	43.55		12.00		8.00	8.00		46,245.00	2,085.00	5,370.00	357.64	1.27	1.70	GORE & EB OFF RAMP TO PINE VALLEY Rd
	43.55	43.95		12.00		8.00	8.00		53,002.00	3,168.00	6,241.11	415.66	1.48	1.97	GORE & EB ON RAMP FROM PINE VALLEY Rd
	44.60	44.90		24.00		2.00	8.00		55,590.00	3,168.00	6,528.67	434.81	1.55	2.06	GORE & EB OFF RAMP TO SUNRISE Hwy
	44.90	45.30		12.00		2.00	8.00		40,415.00	2,915.00	4,814.44	320.64	1.14	1.52	GORE & EB ON RAMP FROM SUNRISE Hwy
	48.55	48.85		12.00		2.00	8.00		34,236.00	2,295.00	4,059.00	270.33	0.96	1.28	GORE & EB OFF RAMP TO BUCKMAN SPRINGS Rd
	48.85	49.25		12.00		2.00	8.00		53,440.00	2,242.00	6,186.89	412.05	1.47	1.96	GORE & EB ON RAMP FROM BUCKMAN SPRINGS Rd
	51.55	52.00		12.00		2.00	8.00		56,313.00	2,829.00	6,571.33	437.65	1.56	2.08	GORE & EB OFF RAMP TO KITCHEN CREEK Rd
	52.00	52.50		12.00		2.00	8.00		62,810.00	4,334.00	7,460.44	496.87	1.77	2.36	GORE & EB ON RAMP FROM KITCHEN CREEK Rd
	60.90	61.15		12.00		2.00	8.00		26,136.00	3,830.00	3,329.56	221.75	0.79	1.05	GORE & EB OFF RAMP TO CRESTWOOD Rd
	61.15	61.60		12.00		2.00	8.00		45,948.00	4,274.00	5,580.22	371.64	1.32	1.76	GORE & EB ON RAMP FROM CRESTWOOD Rd
ROADWAY SUBTOTAL 1					269,519.48						260,450.18	17,359.62	61.76	82.36	

(N) NOT A SEPARATE PAY ITEM, FOR INFORMATION ONLY.

SUMMARY OF QUANTITIES

Q-1

REVISED BY | DATE REVISED
YOUNGCHUN LEE | TOM GUERRINI
CALCULATED-DESIGNED BY | CHECKED BY
FUNCTIONAL SUPERVISOR: ED HAJJ
STATE OF CALIFORNIA - DEPARTMENT OF TRANSPORTATION
Caltrans DESIGN

LAST REVISION 01-13-11 | DATE PLOTTED => 07-FEB-2011 | TIME PLOTTED => 16:04

Dist	COUNTY	ROUTE	POST MILES TOTAL PROJECT	SHEET No.	TOTAL SHEETS
11	SD	8	R39.7/R61.5	37	71

Thomas M. Guerrini 01-07-11
REGISTERED CIVIL ENGINEER DATE

01-18-11
PLANS APPROVAL DATE

REGISTERED PROFESSIONAL ENGINEER THOMAS M. GUERRINI No. 65539 Exp. 09-30-11 CIVIL STATE OF CALIFORNIA

THE STATE OF CALIFORNIA OR ITS OFFICERS OR AGENTS SHALL NOT BE RESPONSIBLE FOR THE ACCURACY OR COMPLETENESS OF SCANNED COPIES OF THIS PLAN SHEET.

ROADWAY QUANTITIES

LOCATION			LENGTH	TRAVELED WAY WIDTH	GRIND Exist Conc Pvmt	SHOULDER WIDTH		MAINLANE Shld AREA	RAMP AREA	GORE AREA	COLD PLANE AC Pvmt	HOT MIX ASPHALT (TYPE A)	TACK COAT	ASPHALTIC EMULSION (FOG SEAL COAT)	DESCRIPTION
						INSIDE	OUTSIDE								
DIRECTION	FROM PM	TO PM	LF (N)	LF (N)	SQYD	LF (N)		SQFT (N)	SQFT (N)	SQFT (N)	SQYD	TON	TON	TON	
WB	39.70	39.83	686.40	24.00	1,830.40	8.00	10.00	12,355.20			1,372.80	91.52	0.33	0.43	
	39.83	40.83	5,302.80	36.00	21,211.20	8.00	10.00	95,450.40			10,605.60	707.04	2.52	3.35	
	40.83	40.86	BRIDGE	BRIDGE	BRIDGE	BRIDGE	BRIDGE	BRIDGE			BRIDGE	BRIDGE	BRIDGE	BRIDGE	LAS BLANCAS Rd UC
	40.86	41.69	4,396.81	36.00	17,587.24	8.00	10.00	79,142.59			8,793.62	586.24	2.09	2.78	
	41.69	42.03	BRIDGE	BRIDGE	BRIDGE	BRIDGE	BRIDGE	BRIDGE			BRIDGE	BRIDGE	BRIDGE	BRIDGE	PINE VALLEY CREEK Br
	42.03	43.10	5,693.86	24.00	15,183.61	8.00	10.00	102,489.39			11,387.71	759.18	2.70	3.60	
	43.10	43.15	BRIDGE	BRIDGE	BRIDGE	BRIDGE	BRIDGE	BRIDGE			BRIDGE	BRIDGE	BRIDGE	BRIDGE	CORTE MADERA Rd UC
	43.15	43.52	2,001.76	24.00	5,338.03	8.00	10.00	36,031.68			4,003.52	266.90	0.95	1.27	
	43.52	43.56	BRIDGE	BRIDGE	BRIDGE	BRIDGE	BRIDGE	BRIDGE			BRIDGE	BRIDGE	BRIDGE	BRIDGE	PINE VALLEY Rd UC
	43.56	45.79	11,817.66	24.00	31,513.76	8.00	10.00	212,717.89			23,635.32	1,575.69	5.61	7.47	
	45.79	45.82	BRIDGE	BRIDGE	BRIDGE	BRIDGE	BRIDGE	BRIDGE			BRIDGE	BRIDGE	BRIDGE	BRIDGE	UN GALLO Rd UC
	45.82	48.85	15,996.73	24.00	42,657.96	8.00	10.00	287,941.22			31,993.47	2,132.90	7.59	10.12	
	48.85	48.89	BRIDGE	BRIDGE	BRIDGE	BRIDGE	BRIDGE	BRIDGE			BRIDGE	BRIDGE	BRIDGE	BRIDGE	BUCKMAN SPRINGS UC
	48.89	50.63	9,213.40	24.00	24,569.07	8.00	10.00	165,841.20			18,426.80	1,228.45	4.37	5.83	
	50.63	50.73	BRIDGE	BRIDGE	BRIDGE	BRIDGE	BRIDGE	BRIDGE			BRIDGE	BRIDGE	BRIDGE	BRIDGE	KITCHEN CREEK Br
	50.73	51.99	6,680.84	24.00	17,815.57	8.00	10.00	120,255.11			13,361.68	890.78	3.17	4.23	
	51.99	52.03	BRIDGE	BRIDGE	BRIDGE	BRIDGE	BRIDGE	BRIDGE			BRIDGE	BRIDGE	BRIDGE	BRIDGE	CAMERON STATION UC
	52.03	56.82	13,161.51	24.00	35,097.37	8.00	10.00	236,907.23			26,323.03	1,754.87	6.24	8.32	
	56.82	57.04	BRIDGE	BRIDGE	BRIDGE	BRIDGE	BRIDGE	BRIDGE			BRIDGE	BRIDGE	BRIDGE	BRIDGE	LA POSTA CREEK Br
	57.04	61.17	21,847.96	24.00	58,261.23	8.00	10.00	393,263.29			43,695.92	2,913.06	10.36	13.82	
	61.17	61.22	BRIDGE	BRIDGE	BRIDGE	BRIDGE	BRIDGE	BRIDGE			BRIDGE	BRIDGE	BRIDGE	BRIDGE	CRESTWOOD Rd UC
	61.22	61.50	1,504.74	24.00	4,012.65	8.00	10.00	27,085.40			3,009.49	200.63	0.71	0.95	
	42.10	42.40	1,584.00				5.00	7,920.00			880.00	58.67	0.21	0.28	ADDITIONAL WIDTH FOR 15 ft SHOULDER
	45.60	45.80	1,056.00				5.00	5,280.00			586.67	39.11	0.14	0.19	ADDITIONAL WIDTH FOR 15 ft SHOULDER
	49.25	49.45	1,056.00				10.00	10,560.00			1,173.33	78.22	0.28	0.37	ADDITIONAL WIDTH FOR 20 ft SHOULDER
	51.80	52.00	1,056.00				10.00	10,560.00			1,173.33	78.22	0.28	0.37	ADDITIONAL WIDTH FOR 20 ft SHOULDER
	57.10	57.40	1,584.00				5.00	7,920.00			880.00	58.67	0.21	0.28	ADDITIONAL WIDTH FOR 15 ft SHOULDER
	58.20	58.70	2,640.00				5.00	13,200.00			1,466.67	97.78	0.35	0.46	ADDITIONAL WIDTH FOR 15 ft SHOULDER
	43.15	43.55		12.00		10.00	12.00		76,840.00	4,188.00	9,003.11	599.61	2.14	2.85	GORE & WB ON RAMP FROM PINE VALLEY Rd
	43.55	43.85		12.00		10.00	8.00		50,175.00	2,675.00	5,872.22	391.09	1.39	1.86	GORE & WB OFF RAMP TO PINE VALLEY Rd
	44.50	44.90		12.00		2.00	8.00		43,150.00	2,114.00	5,029.33	334.95	1.19	1.59	GORE & WB ON RAMP FROM SUNRISE Hwy
	44.90	45.40		24.00		2.00	8.00		77,607.00	2,948.00	8,950.56	596.11	2.12	2.83	GORE & WB OFF RAMP TO SUNRISE Hwy
	48.45	48.90		12.00		4.00	8.00		55,717.00	2,694.00	6,490.11	432.24	1.54	2.05	GORE & WB ON RAMP FROM BUCKMAN SPRINGS Rd
	48.90	49.20		12.00		2.00	8.00		42,585.00	1,914.00	4,944.33	329.29	1.17	1.56	GORE & WB OFF RAMP TO BUCKMAN SPRINGS Rd
	51.60	52.05		12.00		2.00	8.00		49,645.00	4,673.00	6,035.33	401.95	1.43	1.91	GORE & WB ON RAMP FROM KITCHEN CREEK Rd
	52.05	52.25		12.00		2.00	8.00		27,355.00	2,399.00	3,306.00	220.18	0.78	1.05	GORE & WB OFF RAMP TO KITCHEN CREEK Rd
	60.90	61.15		12.00		2.00	8.00		39,374.00	3,830.00	4,800.44	319.71	1.14	1.52	GORE & WB ON RAMP FROM CRESTWOOD Rd
	61.15	61.40		12.00		2.00	8.00		30,053.00	3,027.00	3,675.56	244.79	0.87	1.16	GORE & WB OFF RAMP TO CRESTWOOD Rd
ROADWAY SUBTOTAL 2					275,078.09						260,875.95	17,387.85	61.88	82.50	
ROADWAY SUBTOTAL 1					269,519.48						260,450.18	17,359.62	61.76	82.36	
KITCHEN CREEK Br PROFILE RESTORATION												566.33	0.19		
UNDER DIKE												2,853.86			
DIKE													10.15	13.54	
TOTAL					544,597.57						521,326.13	38,167.66	133.98	178.40	

(N) NOT A SEPARATE PAY ITEM, FOR INFORMATION ONLY.

SUMMARY OF QUANTITIES

Q-2

STATE OF CALIFORNIA - DEPARTMENT OF TRANSPORTATION
Caltrans DESIGN

FUNCTIONAL SUPERVISOR: ED HAJJ
CALCULATED-DESIGNED BY: YOUNGCHUN LEE
CHECKED BY: TOM GUERRINI
REVISED BY / DATE REVISED

LAST REVISION 01-13-11
DATE PLOTTED => 07-FEB-2011
TIME PLOTTED => 16:04

Dist	COUNTY	ROUTE	POST MILES TOTAL PROJECT	SHEET No.	TOTAL SHEETS
11	SD	8	R39.7/R61.5	38	71

Thomas M. Guerrini 01-07-11
REGISTERED CIVIL ENGINEER DATE

01-18-11
PLANS APPROVAL DATE

REGISTERED PROFESSIONAL ENGINEER THOMAS M. GUERRINI No. 65539 Exp. 09-30-11 CIVIL STATE OF CALIFORNIA

THE STATE OF CALIFORNIA OR ITS OFFICERS OR AGENTS SHALL NOT BE RESPONSIBLE FOR THE ACCURACY OR COMPLETENESS OF SCANNED COPIES OF THIS PLAN SHEET.

DIKE QUANTITIES

LOCATION			DIKE TYPE		DIKE WIDTH (N)	PLACE HMA DIKE	MINOR HMA	HOT MIX ASPHALT (TYPE A)	Exist DIKE TYPE	REMOVE AC DIKE	TACK COAT	Rdwy Emb (N)	Rdwy Exc	ASPHALTIC EMULSION (FOG SEAL COAT)	RECONSTRUCT EDC		COMMENTS
	FROM PM	TO PM	INSIDE	OUTSIDE	LF	LF	TON	TON		LF	TON	CY	CY	TON	EA		
EB Rte 8															INSIDE	OUTSIDE	
	R39.70	R40.82		E	1.33	5,995.00	155.87	59.06	E	5,995.00	0.2101			0.2801			
	R40.82	R40.84		C	0.67	75.00	0.57	0.37	E	75.00	0.0013	0.08		0.0018	6	14	
	R39.81	R40.81	E		1.33	5,385.00	140.01	53.05	E	5,385.00	0.1887			0.2516			
	R40.81	R40.83	C		0.67	75.00	0.57	0.37	E	75.00	0.0013	0.08		0.0018			
	BRIDGE	BRIDGE	BRIDGE	BRIDGE	BRIDGE	BRIDGE	BRIDGE	BRIDGE	BRIDGE	BRIDGE	BRIDGE	BRIDGE	BRIDGE	BRIDGE	BRIDGE	BRIDGE	LAS BANCAS Rd UC
	R40.87	R41.64		E	1.33	4,075.00	105.95	40.15	E	4,075.00	0.1428			0.1904	3	15	
	R41.64	R41.69		C	0.67	243.00	1.85	1.21	C	243.00	0.0043	3.60		0.0057			
	BRIDGE	BRIDGE	BRIDGE	BRIDGE	BRIDGE	BRIDGE	BRIDGE	BRIDGE	BRIDGE	BRIDGE	BRIDGE	BRIDGE	BRIDGE	BRIDGE	BRIDGE	BRIDGE	PINE VALLEY CREEK Br
	R42.00	R43.08		E	1.33	5,405.00	140.53	53.25	E	5,405.00	0.1894			0.2526			
	R43.08	R43.09		C	0.67	50.00	0.38	0.25	E	50.00	0.0009	0.06		0.0012	11	12	
	R42.36	R43.09	E		1.33	3,850.00	100.10	37.93	E	3,850.00	0.1349			0.1799			
	R43.09	R43.10	C		0.67	50.00	0.38	0.25	E	50.00	0.0009	0.06		0.0012			
	BRIDGE	BRIDGE	BRIDGE	BRIDGE	BRIDGE	BRIDGE	BRIDGE	BRIDGE	BRIDGE	BRIDGE	BRIDGE	BRIDGE	BRIDGE	BRIDGE	BRIDGE	BRIDGE	CORTE MADERA Rd UC
	R43.14	R43.30		E	1.33	860.00	22.36	8.47	E	860.00	0.0301			0.0402			
	R43.15	R43.54	E		1.33	2,143.00	55.72	21.11	E	2,143.00	0.0751			0.1001			
	R43.54	R43.55	C		0.67	50.00	0.38	0.25	E	50.00	0.0009	0.06		0.0012			
	R43.35	R43.54		E	1.33	1,052.00	27.35	10.36	E	1,052.00	0.0369			0.0492			
	R43.54	R43.55		C	0.67	75.00	0.57	0.37	E	75.00	0.0013	0.08		0.0018			
	R43.30	R43.58		E	1.33	1,450.00	37.70	14.29	E	1,450.00	0.0508			0.0678			PINE VALLEY ROAD EB OFF RAMP
	R43.35	R43.58	E		1.33	1,194.00	31.04	11.76	E	1,194.00	0.0418			0.0558			PINE VALLEY ROAD EB OFF RAMP
	BRIDGE	BRIDGE	BRIDGE	BRIDGE	BRIDGE	BRIDGE	BRIDGE	BRIDGE	BRIDGE	BRIDGE	BRIDGE	BRIDGE	BRIDGE	BRIDGE	BRIDGE	BRIDGE	PINE VALLEY Rd UC
	R43.62	R43.81		E	1.33	973.00	25.30	9.59	E	973.00	0.0341			0.0455			
	R43.62	R44.98	E		1.33	7,174.00	186.52	70.68	E	7,174.00	0.2514			0.3352			
	R43.93	R44.58		E	1.33	3,441.00	89.47	33.90	E	3,441.00	0.1206			0.1608	8	19	
	R44.69	R45.16		E	1.33	2,438.00	63.39	24.02	E	2,438.00	0.0854			0.1139			
	R45.27	R45.82		E	1.33	2,949.00	76.67	29.05	E	2,949.00	0.1034			0.1378			
	R45.82	R45.83		C	0.67	50.00	0.38	0.25	E	50.00	0.0009	0.06		0.0012			
	BRIDGE	BRIDGE	BRIDGE	BRIDGE	BRIDGE	BRIDGE	BRIDGE	BRIDGE	BRIDGE	BRIDGE	BRIDGE	BRIDGE	BRIDGE	BRIDGE	BRIDGE	BRIDGE	UN GALLO Rd UC
	R45.86	R46.34		F	0.67	2,560.00	33.79	12.71	E	2,560.00	0.0452		6.64	0.0603			
	R46.34	R47.19		E	1.33	4,647.00	120.82	45.78	E	4,647.00	0.1629			0.2171			
	R47.19	R47.21		C	0.67	100.00	0.76	0.50	E	100.00	0.0018	0.11		0.0024			
	R47.21	R47.54		F	0.67	1,850.00	24.42	9.18	E	1,850.00	0.0327		0.52	0.0435			
	R47.54	R48.54		E	1.33	5,066.00	131.72	49.91	E	5,066.00	0.1775			0.2367	8	42	
	R47.63	R48.11	E		1.33	2,540.00	66.04	25.02	E	2,540.00	0.0890			0.1187			
	R48.52	R48.85	E		1.33	1,750.00	45.50	17.24	E	1,750.00	0.0613			0.0818			
	R48.69	R48.86		E	1.33	975.00	25.35	9.61	E	975.00	0.0342			0.0456			
	R48.86	R48.88		C	0.67	75.00	0.57	0.37	E	75.00	0.0013		0.19	0.0018			
	BRIDGE	BRIDGE	BRIDGE	BRIDGE	BRIDGE	BRIDGE	BRIDGE	BRIDGE	BRIDGE	BRIDGE	BRIDGE	BRIDGE	BRIDGE	BRIDGE	BRIDGE	BRIDGE	BUCKMAN SPRINGS UC
	R48.91	R49.33	E		1.33	2,220.00	57.72	21.87	E	2,220.00	0.0778			0.1037			
	R48.91	R48.99		E	1.33	385.00	10.01	3.79	E	385.00	0.0135			0.0180			
	R49.21	R49.34		E	1.33	663.00	17.24	6.53	E	663.00	0.0232			0.0310			
	R49.75	R50.48		E	1.33	4,055.00	105.43	39.95	E	4,055.00	0.1421			0.1895		29	
	R50.48	R50.49		C	0.67	75.00	0.57	0.37	E	75.00	0.0013	0.08		0.0018			
	R50.49	R50.63		F	0.67	725.00	9.57	3.60	E	729.00	0.0128	6.98		0.0171			
	BRIDGE	BRIDGE	BRIDGE	BRIDGE	BRIDGE	BRIDGE	BRIDGE	BRIDGE	BRIDGE	BRIDGE	BRIDGE	BRIDGE	BRIDGE	BRIDGE	BRIDGE	BRIDGE	KITCHEN CREEK Br
				SUBTOTAL 1		76,738.00	1,912.57	726.42		76,742.00	2.5839		7.35	3.4458	167		

(N) NOT A SEPARATE PAY ITEM, FOR INFORMATION ONLY.

NOTE:

1. ALL DIKE REMOVED SHALL BE REPLACED.

SUMMARY OF QUANTITIES

Q-3

STATE OF CALIFORNIA - DEPARTMENT OF TRANSPORTATION
Caltrans
DESIGN
FUNCTIONAL SUPERVISOR: ED HAJJ
CALCULATED-DESIGNED BY: PHOUKHAO SASINOUAN
CHECKED BY: TOM GUERRINI
REVISED BY
DATE REVISED

LAST REVISION 01-13-11
DATE PLOTTED => 07-FEB-2011
TIME PLOTTED => 16:04

Dist	COUNTY	ROUTE	POST MILES TOTAL PROJECT	SHEET No.	TOTAL SHEETS
11	SD	8	R39.7/R61.5	39	71

Thomas M. Guerrini 01-07-11
REGISTERED CIVIL ENGINEER DATE

01-18-11
PLANS APPROVAL DATE

REGISTERED PROFESSIONAL ENGINEER THOMAS M. GUERRINI No. 65539 Exp. 09-30-11 CIVIL STATE OF CALIFORNIA

THE STATE OF CALIFORNIA OR ITS OFFICERS OR AGENTS SHALL NOT BE RESPONSIBLE FOR THE ACCURACY OR COMPLETENESS OF SCANNED COPIES OF THIS PLAN SHEET.

DIKE QUANTITIES

LOCATION			DIKE TYPE		DIKE WIDTH (N)	PLACE HMA DIKE	MINOR HMA	HOT MIX ASPHALT (TYPE A)	Exist DIKE TYPE	REMOVE AC DIKE	TACK COAT	Rdwy Emb (N)	Rdwy Exc	ASPHALTIC EMULSION (FOG SEAL COAT)	RECONSTRUCT EDC		COMMENTS
	FROM PM	TO PM	INSIDE	OUTSIDE	LF	LF	TON	TON		LF	TON	CY	CY	TON	EA		
EB Rte 8															INSIDE	OUTSIDE	
	R50.79	R51.26	E		1.33	2,570.00	66.82	25.32	E	2,570.00	0.0901			0.1201			
	R50.72	R51.60		E	1.33	4,672.00	121.47	46.03	E	4,672.00	0.1637			0.2183			
	R51.60	R51.97	E		1.33	1,821.00	47.35	17.94	E	1,821.00	0.0638			0.0851			
	R51.97	R51.98	C		0.67	75.00	0.57	0.37	E	75.00	0.0013		2.12	0.0018	20	7	
	R51.60	R51.79		E	1.33	1,008.00	26.21	9.93	E	1,008.00	0.0353			0.0471			KITCHEN Cr Rd EB OFF-RAMP
	R51.86	R52.00		E	1.33	736.00	19.14	7.25	E	736.00	0.0258			0.0344			KITCHEN Cr Rd EB OFF-RAMP
	R51.65	R51.76	E		1.33	569.00	14.79	5.61	E	569.00	0.0199			0.0266			KITCHEN Cr Rd EB OFF-RAMP
	BRIDGE	BRIDGE	BRIDGE	BRIDGE	BRIDGE	BRIDGE	BRIDGE	BRIDGE	BRIDGE	BRIDGE	BRIDGE	BRIDGE	BRIDGE	BRIDGE	BRIDGE	BRIDGE	CAMERON STATION UC
	R51.97	R52.06	E		1.33	490.00	12.74	4.83	E	490.00	0.0172			0.0229			KITCHEN Cr Rd EB ON-RAMP
	R52.06	R52.37		E	1.33	1,660.00	43.16	16.35	E	1,660.00	0.0582			0.0776			KITCHEN Cr Rd EB ON-RAMP
	R52.00	R52.20	E		1.33	1,100.00	28.60	10.84	E	1,100.00	0.0386			0.0514			
	R52.37	R52.39		E	1.33	100.00	2.60	0.99	E	100.00	0.0035			0.0047			
	R55.20	R55.43		E	1.33	1,210.00	31.46	11.92	E	1,210.00	0.0424			0.0565			
	R55.43	R55.79		D	2.17	1,885.00	110.46	30.30	A	1,885.00	0.1078	2.09		0.1437	16	33	
	R55.79	R55.80		C	0.67	25.00	0.19	0.12	A	25.00	0.0004			0.0006			
	R55.80	R55.80		C	0.67	25.00	0.19	0.12	E	25.00	0.0004			0.0006			
	R55.80	R55.81		C	0.67	37.00	0.28	0.18	F	37.00	0.0007			0.0009			
	R55.72	R56.75	E		1.33	5,337.00	138.76	52.58	E	5,337.00	0.1870			0.2494			
	BRIDGE	BRIDGE	BRIDGE	BRIDGE	BRIDGE	BRIDGE	BRIDGE	BRIDGE	BRIDGE	BRIDGE	BRIDGE	BRIDGE	BRIDGE	BRIDGE	BRIDGE	BRIDGE	LA POSTA CREEK Br
	R57.10	R60.83	E		1.33	19,700.00	512.20	194.08	E	19,700.00	0.6904			0.9205			
	R57.11	R57.13		F	0.67	98.00	1.29	0.49	E	98.00	0.0017	0.33		0.0023			
	R57.13	R57.72		E	1.33	3,102.00	80.65	30.56	E	3,102.00	0.1087			0.1450			
	R57.72	R57.78		D	2.17	350.00	20.51	5.63	A	350.00	0.0200	0.39		0.0267			
	R57.78	R58.00		E	1.33	1,000.00	26.00	9.85	E	1,000.00	0.0350			0.0467			
	R58.00	R58.05		D	2.17	400.00	23.44	6.43	A	400.00	0.0229	0.44		0.0305			
	R58.05	R59.08		E	1.33	5,413.00	140.74	53.33	E	5,413.00	0.1897			0.2529			
	R59.08	R59.10		D	2.17	100.00	5.86	1.61	A	100.00	0.0057	0.11		0.0076			
	R59.10	R59.11		C	0.67	62.00	0.47	0.31	C	62.00	0.0011			0.0015			
	R59.43	R59.45		F	0.67	100.00	1.32	0.50	E	100.00	0.0018		0.26	0.0024			
	R59.45	R59.95		E	1.33	2,613.00	67.94	25.74	E	2,613.00	0.0916			0.1221			
	R59.95	R59.97		C	0.67	62.00	0.47	0.31	C	62.00	0.0011			0.0015			
	R59.97	R59.99		F	0.67	125.00	1.65	0.62	E	125.00	0.0022	1.20		0.0029	18	49	
	R60.23	R60.37		E	1.33	646.00	16.80	6.36	E	646.00	0.0226			0.0302			
	R60.37	R60.38		C	0.67	62.00	0.47	0.31	C	62.00	0.0011			0.0015			
	R60.38	R60.44		F	0.67	325.00	4.29	1.61	E	325.00	0.0057	3.13		0.0077			
	R60.57	R60.64		D	2.17	372.00	21.80	5.98	A	372.00	0.0213	0.41		0.0284			
	R60.64	R60.76		E	1.33	613.00	15.94	6.04	E	613.00	0.0215			0.0286			
	R60.76	R60.77		C	0.67	62.00	0.47	0.31	C	62.00	0.0011			0.0015			
	R60.77	R60.79		F	0.67	125.00	1.65	0.62	E	125.00	0.0022		0.32	0.0029			
	R60.80	R60.89		D	2.17	447.00	26.19	7.19	A	447.00	0.0256	32.71		0.0341			
	R60.89	R60.90		C	0.67	25.00	0.19	0.12	A	25.00	0.0004			0.0006			
	R60.90	R60.90		C	0.67	25.00	0.19	0.12	E	25.00	0.0004			0.0006			
	R60.90	R60.91		C	0.67	37.00	0.28	0.18	F	37.00	0.0007			0.0009			
	R60.96	R61.11	E		1.33	792.00	20.59	7.80	E	792.00	0.0278			0.0370			
	R61.11	R61.14	C		0.67	164.00	1.25	0.81	C	164.00	0.0029			0.0039			
	R61.09	R61.19	E		1.33	500.00	13.00	4.93	E	500.00	0.0175			0.0234			CRESTWOOD Rd EB OFF-RAMP
	BRIDGE	BRIDGE	BRIDGE	BRIDGE	BRIDGE	BRIDGE	BRIDGE	BRIDGE	BRIDGE	BRIDGE	BRIDGE	BRIDGE	BRIDGE	BRIDGE	BRIDGE	BRIDGE	CRESTWOOD Rd UC
SUBTOTAL 2						60,640.00	1,670.44	612.52		60,640.00	2.1788		2.70	2.9056	143		

(N) NOT A SEPARATE PAY ITEM, FOR INFORMATION ONLY.

NOTE:

1. ALL DIKE REMOVED SHALL BE REPLACED.

SUMMARY OF QUANTITIES

Q-4

STATE OF CALIFORNIA - DEPARTMENT OF TRANSPORTATION
Caltrans
DESIGN

FUNCTIONAL SUPERVISOR: ED HAJJ
CALCULATED-DESIGNED BY: PHOUKHAO SASINOUAN
CHECKED BY: TOM GUERRINI
REVISED BY
DATE REVISED

LAST REVISION 01-13-11
DATE PLOTTED => 07-FEB-2011
TIME PLOTTED => 16:04

Dist	COUNTY	ROUTE	POST MILES TOTAL PROJECT	SHEET No.	TOTAL SHEETS
11	SD	8	R39.7/R61.5	40	71

Thomas M. Guerrini 01-07-11
REGISTERED CIVIL ENGINEER DATE

01-18-11
PLANS APPROVAL DATE

REGISTERED PROFESSIONAL ENGINEER THOMAS M. GUERRINI No. 65539 Exp. 09-30-11 CIVIL STATE OF CALIFORNIA

THE STATE OF CALIFORNIA OR ITS OFFICERS OR AGENTS SHALL NOT BE RESPONSIBLE FOR THE ACCURACY OR COMPLETENESS OF SCANNED COPIES OF THIS PLAN SHEET.

DIKE QUANTITIES

LOCATION			DIKE TYPE		DIKE WIDTH (N)	PLACE HMA DIKE	MINOR HOT MIX ASPHALT	HOT MIX ASPHALT (TYPE A)	Exist DIKE TYPE	REMOVE AC DIKE	TACK COAT	Rdwy Emb (N)	Rdwy Exc	ASPHALTIC EMULSION (FOG SEAL COAT)	RECONSTRUCT EDC		COMMENTS
	FROM PM	TO PM	INSIDE	OUTSIDE	LF	LF	TON	TON		LF	TON	CY	CY	TON	EA		
WB Rte 8															INSIDE	OUTSIDE	
	R39.70	R39.72		C	0.67	75.00	0.57	0.37	E	75.00	0.0013	0.08		0.0018			
	R39.72	R40.83		E	1.33	5,860.00	152.36	57.73	E	5,860.00	0.2054			0.2738		21	
	R39.70	R39.72	C		0.67	75.00	0.57	0.37	E	75.00	0.0013	0.08		0.0018			
	R39.72	R40.83	E		1.33	5,810.00	151.06	57.24	E	5,810.00	0.2036			0.2715			
	BRIDGE	BRIDGE	BRIDGE	BRIDGE	BRIDGE	BRIDGE	BRIDGE	BRIDGE	BRIDGE	BRIDGE	BRIDGE	BRIDGE	BRIDGE	BRIDGE	BRIDGE	BRIDGE	LAS BANCAS Rd UC
	R40.85	R40.87		C	0.67	75.00	0.57	0.37	E	75.00	0.0013	0.08		0.0018			
	R40.87	R41.67		E	1.33	4,224.00	109.82	41.61	E	4,224.00	0.1480			0.1974	5	8	
	R40.85	R40.87	C		0.67	75.00	0.57	0.37	E	75.00	0.0013	0.08		0.0018			
	R40.87	R41.66	E		1.33	4,269.00	110.99	42.06	E	4,269.00	0.1496			0.1995			
	BRIDGE	BRIDGE	BRIDGE	BRIDGE	BRIDGE	BRIDGE	BRIDGE	BRIDGE	BRIDGE	BRIDGE	BRIDGE	BRIDGE	BRIDGE	BRIDGE	BRIDGE	BRIDGE	PINE VALLEY CREEK Br
	R42.05	R42.08		C	0.67	110.00	0.84	0.55	C	110.00	0.0019			0.0026			
	R42.08	R42.66		E	1.33	3,053.00	79.38	30.08	E	3,053.00	0.1070			0.1427			
	R42.67	R43.12		E	1.33	2,355.00	61.23	23.20	E	2,355.00	0.0825			0.1100	8	14	
	R42.05	R42.06	C		0.67	60.00	0.46	0.30	C	60.00	0.0011			0.0014			
	R42.06	R43.11	E		1.33	5,492.00	142.79	54.11	E	5,492.00	0.1925			0.2566			
	BRIDGE	BRIDGE	BRIDGE	BRIDGE	BRIDGE	BRIDGE	BRIDGE	BRIDGE	E	BRIDGE	BRIDGE	BRIDGE	BRIDGE	BRIDGE	BRIDGE	BRIDGE	CORTE MADERA Rd UC
	R43.15	R43.16	C		0.67	50.00	0.38	0.25	C	50.00	0.0009			0.0012			
	R43.16	R43.53	E		1.33	1,960.00	50.96	19.31	E	1,960.00	0.0687			0.0916	9		
	R43.28	R43.53		E	1.33	1,345.00	34.97	13.25	E	1,345.00	0.0471			0.0628			
	BRIDGE	BRIDGE	BRIDGE	BRIDGE	BRIDGE	BRIDGE	BRIDGE	BRIDGE	BRIDGE	BRIDGE	BRIDGE	BRIDGE	BRIDGE	BRIDGE	BRIDGE	BRIDGE	PINE VALLEY Rd UC
	R43.57	R43.58		C	0.67	50.00	0.38	0.25	E	50.00	0.0009	0.06		0.0012			
	R43.58	R43.78		E	1.33	1,000.00	26.00	9.85	E	1,000.00	0.0350			0.0467			
	R43.57	R43.58	C		0.67	50.00	0.38	0.25	E	50.00	0.0009	0.06		0.0012			
	R43.58	R44.33	E		1.33	3,785.00	98.41	37.29	E	3,785.00	0.1326			0.1769	21	19	
	R43.85	R44.65		E	1.33	4,225.00	109.85	41.62	E	4,225.00	0.1481			0.1974			
	R44.76	R45.33		E	1.33	3,017.00	78.44	29.72	E	3,017.00	0.1057			0.1410			
	R44.74	R45.82	E		1.33	5,706.00	148.36	56.21	E	5,706.00	0.2000			0.2666			
	R45.38	R45.82		E	1.33	2,357.00	61.28	23.22	E	2,357.00	0.0826			0.1101			
	BRIDGE	BRIDGE	BRIDGE	BRIDGE	BRIDGE	BRIDGE	BRIDGE	BRIDGE	BRIDGE	BRIDGE	BRIDGE	BRIDGE	BRIDGE	BRIDGE	BRIDGE	BRIDGE	UN GALLO Rd UC
	R45.85	R45.87	C		0.67	75.00	0.57	0.37	E	75.00	0.0013	0.08		0.0018			
	R45.87	R48.89	E		1.33	15,974.00	415.32	157.37	E	15,974.00	0.5598			0.7464	23	41	
	R46.34	R48.48		E	1.33	11,276.00	293.18	111.09	E	11,276.00	0.3952			0.5269			
	BRIDGE	BRIDGE	BRIDGE	BRIDGE	BRIDGE	BRIDGE	BRIDGE	BRIDGE	BRIDGE	BRIDGE	BRIDGE	BRIDGE	BRIDGE	BRIDGE	BRIDGE	BRIDGE	BUCKMAN SPRINGS
	R48.91	R48.93	C		0.67	50.00	0.38	0.25	E	50.00	0.0009	0.06		0.0012			
	R49.21	R50.37	E		1.33	7,603.00	197.68	74.90	E	7,603.00	0.2665			0.3553	18	21	
	R50.42	R50.67		E	1.33	1,274.00	33.12	12.55	E	1,274.00	0.0446			0.0595			
	BRIDGE	BRIDGE	BRIDGE	BRIDGE	BRIDGE	BRIDGE	BRIDGE	BRIDGE	BRIDGE	BRIDGE	BRIDGE	BRIDGE	BRIDGE	BRIDGE	BRIDGE	BRIDGE	KITCHEN CREEK Br
	R50.72	R50.78		F	0.67	313.00	4.13	1.55	E	317.00	0.0055		0.32	0.0074			
	R50.78	R50.80		C	0.67	100.00	0.76	0.50	E	100.00	0.0018	0.11		0.0024			
	R50.80	R51.65		E	1.33	4,523.00	117.60	44.56	E	4,523.00	0.1585			0.2114		26	
	R51.65	R52.00		E	1.33	1,826.00	47.48	17.99	E	1,826.00	0.0640			0.0853			KITCHEN CREEK Rd WB ON-RAMP
	R51.80	R52.00		E	1.33	1,085.00	28.21	10.69	E	1,085.00	0.0380			0.0507			
	BRIDGE	BRIDGE	BRIDGE	BRIDGE	BRIDGE	BRIDGE	BRIDGE	BRIDGE	BRIDGE	BRIDGE	BRIDGE	BRIDGE	BRIDGE	BRIDGE	BRIDGE	BRIDGE	CAMERON STATION UC
SUBTOTAL 3						99,177.00	2,559.05	971.40		99,181.00	3.4554		0.32	4.6077	234		

(N) NOT A SEPARATE PAY ITEM, FOR INFORMATION ONLY.

NOTE:

1. ALL DIKE REMOVED SHALL BE REPLACED.

SUMMARY OF QUANTITIES

Q-5

STATE OF CALIFORNIA - DEPARTMENT OF TRANSPORTATION
Caltrans
DESIGN

FUNCTIONAL SUPERVISOR: ED HAJJ
CALCULATED-DESIGNED BY: PHOUKHAO SASINOUAN
CHECKED BY: TOM GUERRINI
REVISED BY
DATE REVISED

LAST REVISION 01-13-11
DATE PLOTTED => 07-FEB-2011
TIME PLOTTED => 16:04

Dist	COUNTY	ROUTE	POST MILES TOTAL PROJECT	SHEET No.	TOTAL SHEETS
11	SD	8	R39.7/R61.5	41	71

Thomas M. Guerrini 01-07-11
REGISTERED CIVIL ENGINEER DATE

01-18-11
PLANS APPROVAL DATE

REGISTERED PROFESSIONAL ENGINEER THOMAS M. GUERRINI No. 65539 Exp. 09-30-11 CIVIL STATE OF CALIFORNIA

THE STATE OF CALIFORNIA OR ITS OFFICERS OR AGENTS SHALL NOT BE RESPONSIBLE FOR THE ACCURACY OR COMPLETENESS OF SCANNED COPIES OF THIS PLAN SHEET.

DIKE QUANTITIES

LOCATION			DIKE TYPE		DIKE WIDTH (N)	PLACE HMA DIKE	MINOR HMA	HOT MIX ASPHALT (TYPE A)	Exist DIKE TYPE	REMOVE AC DIKE	TACK COAT	Rdwy Emb (N)	Rdwy Exc	ASPHALTIC EMULSION (FOG SEAL COAT)	RECONSTRUCT EDC		COMMENTS
	FROM PM	TO PM	INSIDE	OUTSIDE	LF	LF	TON	TON		LF	TON	CY	CY	TON	EA		
WB Rte 8	R51.99	R52.02		C	0.67	75.00	0.57	0.37	E	75.00	0.0013		0.19	0.0018	INSIDE	OUTSIDE	
	R52.02	R52.06		E	1.33	270.00	7.02	2.66	E	270.00	0.0095			0.0126			
	R52.00	R52.25		E	1.33	1,100.00	28.60	10.84	E	1,100.00	0.0386			0.0514			KITCHEN Cr Rd WB OFF-RAMP
	R52.25	R52.61		E	1.33	1,883.00	48.96	18.55	E	1,883.00	0.0660			0.0880			
	R54.91	R55.09		D	2.17	956.00	56.02	15.37	A	956.00	0.0547	1.06		0.0729			
	R55.09	R55.50		E	1.33	2,144.00	55.74	21.12	E	2,144.00	0.0751			0.1002	6	38	
	R54.91	R56.82	E		1.33	10,088.00	262.29	99.39	E	10,088.00	0.3535			0.4714			
	R56.04	R56.05		F	0.67	38.00	0.50	0.19	E	38.00	0.0007		0.10	0.0009			
	R56.05	R56.06		C	0.67	62.00	0.47	0.31	C	62.00	0.0011			0.0015			
	R56.06	R56.69		E	1.33	3,300.00	85.80	32.51	E	3,300.00	0.1157			0.1542			
	BRIDGE	BRIDGE	BRIDGE	BRIDGE	BRIDGE	BRIDGE	BRIDGE	BRIDGE	BRIDGE	BRIDGE	BRIDGE	BRIDGE	BRIDGE	BRIDGE	BRIDGE	BRIDGE	LA POSTA CREEK Br
	R57.04	R57.10	C		0.67	320.00	2.43	1.59	C	320.00	0.0056			0.0075			
	R57.10	R60.93	E		1.33	20,250.00	526.50	199.50	E	20,250.00	0.7097			0.9462			
	R57.11	R57.12		C	0.67	75.00	0.57	0.37	E	75.00	0.0013		0.19	0.0018			
	R57.12	R57.47		E	1.33	1,825.00	47.45	17.98	E	1,825.00	0.0640			0.0853			
	R57.47	R57.49		F	0.67	100.00	1.32	0.50	E	100.00	0.0018	0.11		0.0024			
	R57.87	R57.95		F	0.67	400.00	5.28	1.99	E	400.00	0.0071	2.02		0.0094			
	R58.20	R58.23		C	0.67	164.00	1.25	0.81	C	164.00	0.0029			0.0039			
	R58.23	R58.43		E	1.33	999.00	25.97	9.84	E	999.00	0.0350			0.0467			
	R58.50	R58.86		E	1.33	1,882.00	48.93	18.54	E	1,882.00	0.0660			0.0879			
	R58.86	R58.93		D	2.17	350.00	20.51	5.63	A	350.00	0.0200	0.39		0.0267			
	R59.34	R59.35		F	0.67	78.00	1.03	0.39	E	78.00	0.0014		0.20	0.0018			
	R59.35	R59.36		C	0.67	62.00	0.47	0.31	C	62.00	0.0011			0.0015			
	R59.36	R59.41		E	1.33	260.00	6.76	2.56	E	260.00	0.0091			0.0121	30	59	
	R59.45	R59.46		D	2.17	20.00	1.17	0.32	A	20.00	0.0011	0.02		0.0015			
	R59.58	R59.59		C	0.67	37.00	0.28	0.18	F	37.00	0.0007			0.0009			
	R59.59	R59.59		C	0.67	25.00	0.19	0.12	E	25.00	0.0004			0.0006			
	R59.59	R59.60		C	0.67	25.00	0.19	0.12	A	25.00	0.0004			0.0006			
	R59.60	R59.61		D	2.17	77.00	4.51	1.24	A	77.00	0.0044	12.49		0.0059			
	R59.61	R60.40		E	1.33	4,200.00	109.20	41.38	E	4,200.00	0.1472			0.1963			
	R60.40	R60.42		D	2.17	100.00	5.86	1.61	E	100.00	0.0057		0.26	0.0076			
	R60.42	R60.44		D	2.17	69.00	4.04	1.11	A	69.00	0.0039	0.08		0.0053			
	R60.60	R60.61		C	0.67	37.00	0.28	0.18	F	37.00	0.0007			0.0009			
	R60.61	R60.61		C	0.67	25.00	0.19	0.12	E	25.00	0.0004			0.0006			
	R60.61	R60.61		C	0.67	25.00	0.19	0.12	A	25.00	0.0004			0.0006			
	R60.61	R60.65		D	2.17	200.00	11.72	3.21	A	200.00	0.0114	12.00		0.0152			
	R60.65	R60.91		E	1.33	1,350.00	35.10	13.30	E	1,350.00	0.0473			0.0631			
	R60.91	R60.92		F	0.67	25.00	0.33	0.12	E	25.00	0.0004		0.06	0.0006			
	R60.92	R60.93		F	0.67	25.00	0.33	0.12	E	25.00	0.0004		0.06	0.0006			CRESTWOOD Rd WB ON-RAMP
	R61.02	R61.17		D	2.17	768.00	45.00	12.34	A	768.00	0.0439	0.85		0.0586			
	BRIDGE	BRIDGE	BRIDGE	BRIDGE	BRIDGE	BRIDGE	BRIDGE	BRIDGE	BRIDGE	BRIDGE	BRIDGE	BRIDGE	BRIDGE	BRIDGE	BRIDGE	BRIDGE	CRESTWOOD Rd UC
	R61.17	R61.23	E		1.33	300.00	7.80	2.96	E	300.00	0.0105			0.0140			CRESTWOOD Rd WB OFF-RAMP
	R61.23	R61.30		E	1.33	370.00	9.62	3.65	E	370.00	0.0130			0.0173			CRESTWOOD Rd WB OFF-RAMP
SUBTOTAL 4						54,359.00	1,470.44	543.52		54,359.00	1.9334		1.06	2.5783	133		
SUBTOTAL 1						76,738.00	1,912.57	726.42		76,742.00	2.5839		7.35	3.4458	167		
SUBTOTAL 2						60,640.00	1,670.44	612.52		60,640.00	2.1788		2.70	2.9056	143		
SUBTOTAL 3						99,177.00	2,559.05	971.40		99,181.00	3.4554		0.32	4.6077	234		
PLACE HMA (Misc AREAS)							23.60										
TOTAL						290,914.00	7,636.10	2,853.86*		290,922.00	10.1515*		11.43**	13.5374*	677		

(N) NOT A SEPARATE PAY ITEM, FOR INFORMATION ONLY.
* FOR ADDITIONAL QUANTITIES, SEE ROADWAY QUANTITIES TABLE.
** FOR ADDITIONAL QUANTITIES, SEE ROADWAY EXCAVATION TABLE.

NOTE:

1. ALL DIKE REMOVED SHALL BE REPLACED.

SUMMARY OF QUANTITIES

Q-6

STATE OF CALIFORNIA - DEPARTMENT OF TRANSPORTATION
Caltrans®
DESIGN
FUNCTIONAL SUPERVISOR: ED HAJJ
CALCULATED-DESIGNED BY: PHOUKHAO SASINOUAN
CHECKED BY: TOM GUERRINI
REVISED BY
DATE REVISED

LAST REVISION 01-13-11
DATE PLOTTED => 07-FEB-2011
TIME PLOTTED => 16:04

Dist	COUNTY	ROUTE	POST MILES TOTAL PROJECT	SHEET No.	TOTAL SHEETS
11	SD	8	R39.7/R61.5	42	71

Thomas M. Guerrini 01-07-11
REGISTERED CIVIL ENGINEER DATE

01-18-11
PLANS APPROVAL DATE

REGISTERED PROFESSIONAL ENGINEER THOMAS M. GUERRINI No. 65539 Exp. 09-30-11 CIVIL STATE OF CALIFORNIA

THE STATE OF CALIFORNIA OR ITS OFFICERS OR AGENTS SHALL NOT BE RESPONSIBLE FOR THE ACCURACY OR COMPLETENESS OF SCANNED COPIES OF THIS PLAN SHEET.

SEAL JOINT (EXISTING CONCRETE PAVEMENT)

DIRECTION	LOCATION FROM PM	LOCATION TO PM	LANE LINE	TYPE	LENGTH (LF)	REMARKS
EB	39.700	40.839	1/2, 2/3	R	12,027.8	SEAL LONGITUDINAL JOINT ONLY
	40.853	41.267	1/2, 2/3		4,371.8	
	41.267	41.703	1/2		2,302.1	
	42.033	43.087	1/2		5,565.1	
	43.115	43.544	1/2		2,265.1	
	43.570	45.793	1/2		11,737.4	
	45.809	48.842	1/2		16,014.2	
	48.865	50.639	1/2		9,366.7	
	50.722	51.980	1/2		6,642.2	
	52.010	52.612	1/2		3,178.6	
	54.909	56.766	1/2		9,857.8	
	57.017	61.147	1/2		21,806.4	
	61.175	61.500	1/2		1,716.0	
WB	39.700	39.829	1/2		681.1	
	39.829	40.766	1/2, 2/3		9,894.7	
	40.782	41.703	1/2, 2/3		9,725.8	
	42.033	43.108	1/2		5,676.0	
	43.138	43.532	1/2		2,080.3	
	43.552	45.797	1/2		11,853.6	
	45.815	48.859	1/2		16,072.3	
	48.883	50.639	1/2		9,271.7	
	50.722	51.995	1/2		6,721.4	
	52.025	52.612	1/2		3,099.4	
	54.909	56.825	1/2		10,116.5	
	57.026	61.183	1/2		21,949.0	
	61.212	61.500	1/2		1,520.6	
TOTAL					215,513.6	

Shld RUMBLE STRIP (HMA, GROUND-IN INDENTATIONS)

DIRECTION	LOCATION FROM PM	LOCATION TO PM	INSIDE/OUTSIDE SHOULDER LENGTH (LF) (N)	STATION
EB/WB	R39.7	R61.5	395,008	3,950.08
			TOTAL	3,950.08

(N) NOT A SEPARATE PAY ITEM, FOR INFORMATION ONLY.

PLACE HOT MIX ASPHALT (MISCELLANEOUS AREAS)

DIRECTION	LOCATION (PM)	DESCRIPTION	AREA (SQYD)	MINOR HMA (TON)
EB	R55.8	MISCELLANEOUS PAVING AT MBGR FLARE	38.84	5.9
EB	R60.9		38.84	5.9
WB	R59.6		38.84	5.9
WB	R60.6		38.84	5.9
		TOTAL	155.36	23.6*

* FOR ADDITIONAL QUANTITIES, SEE DIKE QUANTITY TABLES

SEAL PAVEMENT JOINT

DIRECTION	LOCATION FROM STA	LOCATION TO STA	LENGTH (LF)	REMARKS
EB	2803+03.31	2803+78.00	168	TRANSVERSE JOINT
			75	LONGITUDINAL JOINT
	2808+78.00	2809+88.39	216	TRANSVERSE JOINT
			110	LONGITUDINAL JOINT
WB	2802+46.86	2803+77.00	264	TRANSVERSE JOINT
			130	LONGITUDINAL JOINT
	2808+77.00	2810+33.72	312	TRANSVERSE JOINT
			156	LONGITUDINAL JOINT
TOTAL			1,431	

STRUCTURAL SECTION QUANTITIES FOR PROFILE RESTORATION WORK NEAR KITCHEN CREEK BRIDGE

LOCATION LINE	SIDE	FROM STATION	TO STATION	DESCRIPTION	CONCRETE PAVEMENT (CY)	HOT MIX ASPHALT (TYPE A) (TON)	CLASS 2 AGGREGATE BASE (CY)	TACK COAT (TON)
"SD8"	EB	2803+03.31	2803+78.00	TRAVEL LANES	46.47	59.75		
	EB	2803+03.31	2803+78.00	SHOULDERS		29.88	49.79	0.030
	EB	2808+78.00	2809+88.39	TRAVEL LANES	68.69	88.31		
	EB	2808+78.00	2809+88.39	SHOULDERS		44.16	73.59	0.044
	WB	2802+46.86	2803+77.00	TRAVEL LANES	80.98	104.11		
	WB	2802+46.86	2803+77.00	SHOULDERS		52.06	86.76	0.051
	WB	2808+77.00	2810+33.72	TRAVEL LANES	97.51	125.38		
	WB	2808+77.00	2810+33.72	SHOULDERS		62.69	104.48	0.062
				TOTAL	293.65	566.34*	314.62	0.187*

* FOR ADDITIONAL QUANTITIES, SEE ROADWAY QUANTITIES TABLE
NOTE: ASPHALTIC EMULSION (FOG SEAL COAT) INCLUDED IN ROADWAY QUANTITIES

SUMMARY OF QUANTITIES

Q-7

REVISED BY | DATE REVISED
ANH NGUYET | TOM GUERRINI
CALCULATED-DESIGNED BY | CHECKED BY
FUNCTIONAL SUPERVISOR: ED HAJJ

STATE OF CALIFORNIA - DEPARTMENT OF TRANSPORTATION
DESIGN
Caltrans

LAST REVISION 01-13-11 | DATE PLOTTED => 07-FEB-2011 | TIME PLOTTED => 16:04

Dist	COUNTY	ROUTE	POST MILES TOTAL PROJECT	SHEET No.	TOTAL SHEETS
11	SD	8	R39.7/R61.5	43	71

Thomas M. Guerrini 01-07-11
REGISTERED CIVIL ENGINEER DATE

01-18-11
PLANS APPROVAL DATE

REGISTERED PROFESSIONAL ENGINEER THOMAS M. GUERRINI No. 65539 Exp. 09-30-11 CIVIL STATE OF CALIFORNIA

THE STATE OF CALIFORNIA OR ITS OFFICERS OR AGENTS SHALL NOT BE RESPONSIBLE FOR THE ACCURACY OR COMPLETENESS OF SCANNED COPIES OF THIS PLAN SHEET.

REPLACE CONCRETE PAVEMENT (RAPID STRENGTH CONCRETE)

POST MILE	ROUTE	DIRECTION	LANE	No. of SLABS (N)	Avg LENGTH (FEET) (N)	WIDTH (FEET) (N)	DEPTH PCC (FEET) (N)	DEPTH CTB (FEET) (N)	REMOVAL VOLUME PCC (CY) (N)	REMOVAL VOLUME CTB (CY) (N)	REPLACE CONCRETE PAVEMENT (RAPID STRENGTH CONCRETE) (CY)	DOWEL BARS (DRILL AND BOND) (EA)	COMMENTS
R 39.710	8	EB	3	1	15.5	12	0.70	0.45	4.8	3.1	7.9	20	
R 39.723			3	1					4.8	3.1	7.9	20	
R 39.729			3	1					4.8	3.1	7.9	20	
R 39.755			3	1					4.8	3.1	7.9	20	
R 39.823			3	15					72.3	46.5	118.8	300	
R 39.848			3	1					4.8	3.1	7.9	20	
R 39.851			3	1					4.8	3.1	7.9	20	
R 39.861			3	1					4.8	3.1	7.9	20	
R 39.932			3	1					4.8	3.1	7.9	20	
R 39.959			3	1					4.8	3.1	7.9	20	
R 39.965			3	1					4.8	3.1	7.9	20	
R 40.058			3	1					4.8	3.1	7.9	20	
R 40.060			3	1					4.8	3.1	7.9	20	
R 40.073			3	1					4.8	3.1	7.9	20	
R 40.091			3	1					4.8	3.1	7.9	20	
R 40.140			3	1					4.8	3.1	7.9	20	
R 40.185			3	1					4.8	3.1	7.9	20	
R 40.218			3	1					4.8	3.1	7.9	20	
R 40.837			3	1					4.8	3.1	7.9	20	
R 40.863			3	1					4.8	3.1	7.9	20	
R 40.889			3	9					43.4	27.9	71.3	180	
R 41.479			3	1					4.8	3.1	7.9	20	
R 41.483			3	1					4.8	3.1	7.9	20	
R 41.486			2	1					4.8	3.1	7.9	20	
R 41.489			2	1					4.8	3.1	7.9	20	
R 41.498			2	1					4.8	3.1	7.9	20	
R 41.500			2	1					4.8	3.1	7.9	20	
R 41.538			2	1					4.8	3.1	7.9	20	
R 41.541			2	1					4.8	3.1	7.9	20	
R 41.561			2	1					4.8	3.1	7.9	20	
R 41.564			2	1					4.8	3.1	7.9	20	
R 41.571			2	1					4.8	3.1	7.9	20	
R 41.573			2	1					4.8	3.1	7.9	20	
R 41.649			2	1					4.8	3.1	7.9	20	
R 41.670			2	1					4.8	3.1	7.9	20	
R 41.673			2	1					4.8	3.1	7.9	20	
R 41.678			2	1					4.8	3.1	7.9	20	
R 41.681			2	1					4.8	3.1	7.9	20	
R 41.683			2	1					4.8	3.1	7.9	20	
R 41.685			2	1					4.8	3.1	7.9	20	
R 43.543			1 & 2	2					9.6	6.2	15.8	40	
R 43.575			1 & 2	2					9.6	6.2	15.8	40	
R 45.389			1 & 2	2					9.6	6.2	15.8	40	
R 45.393			1 & 2	2					9.6	6.2	15.8	40	
R 47.114			2	1					4.8	3.1	7.9	20	
R 47.291			2	1					4.8	3.1	7.9	20	
R 47.293			2	1					4.8	3.1	7.9	20	
R 47.296			2	1					4.8	3.1	7.9	20	
R 47.301			2	1					4.8	3.1	7.9	20	
R 47.303			2	1					4.8	3.1	7.9	20	
R 48.838			2	1					4.8	3.1	7.9	20	
R 48.872			2	1					4.8	3.1	7.9	20	
R 55.155			2	1					4.8	3.1	7.9	20	
R 55.177			2	1					4.8	3.1	7.9	20	
R 55.179			2	1					4.8	3.1	7.9	20	
R 55.182			2	1					4.8	3.1	7.9	20	
R 55.289			2	1					4.8	3.1	7.9	20	
R 55.292			2	1					4.8	3.1	7.9	20	
R 55.838			2	1					4.8	3.1	7.9	20	
R 55.841			2	1					4.8	3.1	7.9	20	
R 55.845			2	1					4.8	3.1	7.9	20	
R 56.525			2	1					4.8	3.1	7.9	20	
R 56.529			2	1					4.8	3.1	7.9	20	
R 56.536			2	1					4.8	3.1	7.9	20	
R 56.538			2	1					4.8	3.1	7.9	20	
R 59.285			2	1					4.8	3.1	7.9	20	
R 59.330			2	1					4.8	3.1	7.9	20	
R 59.333			2	1					4.8	3.1	7.9	20	
R 59.337			2	1					4.8	3.1	7.9	20	
R 59.339			2	1					4.8	3.1	7.9	20	
										SUBTOTAL 1	758.9	1920	

(N) - NOT A SEPARATE PAY ITEM, FOR INFORMATION ONLY.

SUMMARY OF QUANTITIES

Q-8

STATE OF CALIFORNIA - DEPARTMENT OF TRANSPORTATION
Caltrans® DESIGN

FUNCTIONAL SUPERVISOR: ED HAJJ
CALCULATED-DESIGNED BY: TOM GUERRINI
CHECKED BY: YUSUF RAHMAN
REVISED BY
DATE REVISED

LAST REVISION 01-13-11
DATE PLOTTED => 07-FEB-2011
TIME PLOTTED => 16:04

Dist	COUNTY	ROUTE	POST MILES TOTAL PROJECT	SHEET No.	TOTAL SHEETS
11	SD	8	R39.7/R61.5	44	71

Thomas M. Guerrini 01-07-11
REGISTERED CIVIL ENGINEER DATE

01-18-11
PLANS APPROVAL DATE

REGISTERED PROFESSIONAL ENGINEER THOMAS M. GUERRINI No. 65539 Exp. 09-30-11 CIVIL STATE OF CALIFORNIA

THE STATE OF CALIFORNIA OR ITS OFFICERS OR AGENTS SHALL NOT BE RESPONSIBLE FOR THE ACCURACY OR COMPLETENESS OF SCANNED COPIES OF THIS PLAN SHEET.

REPLACE CONCRETE PAVEMENT (RAPID STRENGTH CONCRETE)

POST MILE	ROUTE	DIRECTION	LANE	No. of SLABS (N)	Avg LENGTH (FEET) (N)	WIDTH (FEET) (N)	DEPTH PCC (FEET) (N)	DEPTH CTB (FEET) (N)	REMOVAL VOLUME PCC (CY) (N)	REMOVAL VOLUME CTB (CY) (N)	REPLACE CONCRETE PAVEMENT (RAPID STRENGTH CONCRETE) (CY)	DOWEL BARS (DRILL AND BOND) (EA)	COMMENTS
R 59.342	8	EB	2	1	15.5	12	0.70	0.45	4.8	3.1	7.9	20	
R 59.345			2	1					4.8	3.1	7.9	20	
R 59.349			2	1					4.8	3.1	7.9	20	
R 59.351			2	1					4.8	3.1	7.9	20	
R 59.354			2	1					4.8	3.1	7.9	20	
R 59.356			2	1					4.8	3.1	7.9	20	
R 59.360			2	1					4.8	3.1	7.9	20	
R 59.363			2	1					4.8	3.1	7.9	20	
R 59.365			2	1					4.8	3.1	7.9	20	
R 59.367			2	1					4.8	3.1	7.9	20	
R 59.386			2	1					4.8	3.1	7.9	20	
R 59.389			2	1					4.8	3.1	7.9	20	
R 59.392			2	1					4.8	3.1	7.9	20	
R 59.446			2	1					4.8	3.1	7.9	20	
R 59.449			2	1					4.8	3.1	7.9	20	
R 59.452			2	1					4.8	3.1	7.9	20	
R 59.456			2	1					4.8	3.1	7.9	20	
R 59.458			2	1					4.8	3.1	7.9	20	
R 59.484			2	1					4.8	3.1	7.9	20	
R 59.491			2	1					4.8	3.1	7.9	20	
R 59.493			2	1					4.8	3.1	7.9	20	
R 59.496			2	1					4.8	3.1	7.9	20	
R 59.498			2	1					4.8	3.1	7.9	20	
R 59.504			2	1					4.8	3.1	7.9	20	
R 59.506			2	1					4.8	3.1	7.9	20	
R 59.527			2	1					4.8	3.1	7.9	20	
R 59.530			2	1					4.8	3.1	7.9	20	
R 59.539			2	1					4.8	3.1	7.9	20	
R 59.542			2	1					4.8	3.1	7.9	20	
R 59.551			2	1					4.8	3.1	7.9	20	
R 59.553			2	1					4.8	3.1	7.9	20	
R 59.691			2	1					4.8	3.1	7.9	20	
R 59.697			2	1					4.8	3.1	7.9	20	
R 59.700			2	1					4.8	3.1	7.9	20	
R 40.752		WB	3	1					4.8	3.1	7.9	20	
R 40.755			3	1					4.8	3.1	7.9	20	
R 40.758			3	1					4.8	3.1	7.9	20	
R 40.761			3	1					4.8	3.1	7.9	20	
R 40.766			2 & 3	2					9.6	6.2	15.8	40	
R 40.768			1 & 2	2					9.6	6.2	15.8	40	
R 45.431			2	1					4.8	3.1	7.9	20	
R 45.823			1 & 2	2					9.6	6.2	15.8	40	
R 56.077			2	1					4.8	3.1	7.9	20	
R 56.203			2	1					4.8	3.1	7.9	20	
R 56.207			2	1					4.8	3.1	7.9	20	
R 58.781			2	1					4.8	3.1	7.9	20	
R 58.804			2	1					4.8	3.1	7.9	20	
R 58.925			2	1					4.8	3.1	7.9	20	
R 59.563			2	1					4.8	3.1	7.9	20	
R 59.571			2	1					4.8	3.1	7.9	20	
										SUBTOTAL 1	758.9	1920	
										TOTAL	1177.6	2980	

(N) - NOT A SEPARATE PAY ITEM, FOR INFORMATION ONLY.

SUMMARY OF QUANTITIES

Q-9

STATE OF CALIFORNIA - DEPARTMENT OF TRANSPORTATION
Caltrans®
DESIGN

FUNCTIONAL SUPERVISOR: ED HAJJ
CALCULATED-DESIGNED BY: TOM GUERRINI
CHECKED BY: YUSUF RAHMAN
REVISED BY
DATE REVISED

LAST REVISION 01-13-11
DATE PLOTTED => 07-FEB-2011
TIME PLOTTED => 16:05

Dist	COUNTY	ROUTE	POST MILES TOTAL PROJECT	SHEET No.	TOTAL SHEETS
11	SD	8	R39.7/R61.5	45	71

Thomas M. Guerrini 01-07-11
REGISTERED CIVIL ENGINEER DATE

01-18-11
PLANS APPROVAL DATE

REGISTERED PROFESSIONAL ENGINEER THOMAS M. GUERRINI No. 65539 Exp. 09-30-11 CIVIL STATE OF CALIFORNIA

THE STATE OF CALIFORNIA OR ITS OFFICERS OR AGENTS SHALL NOT BE RESPONSIBLE FOR THE ACCURACY OR COMPLETENESS OF SCANNED COPIES OF THIS PLAN SHEET.

ROADWAY EXCAVATION

	LOCATION SIDE	FROM	TO	MATERIAL TO BE EXCAVATED	ROADWAY EXCAVATION
		"SD8" Sta	"SD8" Sta		(CY)
ROUTE 8	EB	2803+03.31	2803+78.00	LANE STRUCTURAL SECTION	76.3
	EB	2803+03.31	2803+78.00	SHOULDERS STRUCTURAL SECTION	29.0
	EB	2808+78.00	2809+88.39	LANE STRUCTURAL SECTION	112.8
	EB	2808+78.00	2809+88.39	SHOULDERS STRUCTURAL SECTION	42.9
	WB	2802+46.86	2803+77.00	LANE STRUCTURAL SECTION	133.0
	WB	2802+46.86	2803+77.00	SHOULDERS STRUCTURAL SECTION	50.6
	WB	2808+77.00	2810+33.72	LANE STRUCTURAL SECTION	160.2
	WB	2808+77.00	2810+33.72	SHOULDERS STRUCTURAL SECTION	60.9
				SUBTOTAL STRUCTURAL SECTION	665.7
	EB	2803+03.31	2803+78.00	SHOULDERS SUBGRADE	24.9
	EB	2808+78.00	2809+88.39	SHOULDERS SUBGRADE	36.8
	WB	2802+46.86	2803+77.00	SHOULDERS SUBGRADE	43.4
	WB	2808+77.00	2810+33.72	SHOULDERS SUBGRADE	52.2
				SUBTOTAL SUBGRADE	157.3
		PM	PM		
	EB & WB	39.7	61.5	HINGE BEHIND DIKE**	11.4
				TOTAL	834.4

**SEE DIKE QUANTITY SHEETS FOR SPECIFIC LOCATIONS.

EMBANKMENT (N)

	LOCATION SIDE	FROM	TO	DESCRIPTION	LENGTH	WIDTH	Avg DEPTH	VOLUME
		PM	PM		YARD (N)	YARD (N)	YARD (N)	CY (N)
ROUTE 8	WB	45.9	46.2	ERODED AREA NEAR INSIDE Shld	528.00	1.00	0.3300	137.3*
	WB	46.4	46.6	ERODED AREA NEAR OUTSIDE Shld	333.00	1.00	0.3300	86.6*
	WB	46.7	46.8	ERODED AREA NEAR OUTSIDE Shld	133.00	0.33	0.3300	12.0*
	EB & WB	39.7	61.5	HINGE BEHIND DIKE**				81.8
		"SD8" Sta	"SD8" Sta					
	EB	2803+03.36	2804+08.24	OUTSIDE HINGE NEAR KITCHEN CREEK Br	104.88	3.33	0.0106	3.7
	EB	2803+03.36	2804+08.24	INSIDE HINGE NEAR KITCHEN CREEK Br	104.88	3.33	0.0144	5.0
	EB	2808+46.70	2809+88.39	OUTSIDE HINGE NEAR KITCHEN CREEK Br	141.69	3.33	0.0132	6.2
	EB	2808+46.70	2809+88.39	INSIDE HINGE NEAR KITCHEN CREEK Br	141.69	3.33	0.0144	6.8
	WB	2802+46.86	2804+08.31	OUTSIDE HINGE NEAR KITCHEN CREEK Br	161.45	3.33	0.0151	8.1
	WB	2802+46.86	2804+08.31	INSIDE HINGE NEAR KITCHEN CREEK Br	161.45	3.33	0.0367	19.7
	WB	2808+46.57	2810+33.72	OUTSIDE HINGE NEAR KITCHEN CREEK Br	187.15	1.00	0.0193	3.6
	WB	2808+46.57	2810+33.72	INSIDE HINGE NEAR KITCHEN CREEK Br	187.15	3.33	0.0336	21.0
	EB	2803+03.36	2804+08.24	Pvmt AREA NEAR KITCHEN CREEK Br	104.88	13.33	0.0250	35.0
	EB	2808+46.70	2809+88.39	Pvmt AREA NEAR KITCHEN CREEK Br	141.69	13.33	0.0276	52.1
	WB	2802+46.86	2804+08.31	Pvmt AREA NEAR KITCHEN CREEK Br	161.45	13.33	0.0518	111.5
	WB	2808+46.57	2810+33.72	Pvmt AREA NEAR KITCHEN CREEK Br	187.15	13.33	0.0529	132.0
							TOTAL	722.4

(N) NOT A SEPARATE PAY ITEM, FOR INFORMATION ONLY.
* VOLUME CALCULATION BASED ON SEMI ELLIPTICAL AREA.
** SEE DIKE QUANTITY SHEETS FOR SPECIFIC LOCATIONS.

SUMMARY OF QUANTITIES

Q-10

STATE OF CALIFORNIA - DEPARTMENT OF TRANSPORTATION
Caltrans DESIGN
FUNCTIONAL SUPERVISOR: ED HAJJ
CALCULATED-DESIGNED BY: TOM GUERRINI
CHECKED BY: YUSUF RAHMAN
REVISED BY / DATE REVISED

LAST REVISION 01-13-11 | DATE PLOTTED => 07-FEB-2011 | TIME PLOTTED => 16:05

Dist	COUNTY	ROUTE	POST MILES TOTAL PROJECT	SHEET No.	TOTAL SHEETS
11	SD	8	R39.7/R61.5	46	71

Thomas M. Guerrini 01-07-11
REGISTERED CIVIL ENGINEER DATE

01-18-11
PLANS APPROVAL DATE

REGISTERED PROFESSIONAL ENGINEER THOMAS M. GUERRINI No. 65539 Exp. 09-30-11 CIVIL STATE OF CALIFORNIA

THE STATE OF CALIFORNIA OR ITS OFFICERS OR AGENTS SHALL NOT BE RESPONSIBLE FOR THE ACCURACY OR COMPLETENESS OF SCANNED COPIES OF THIS PLAN SHEET.

DRAINAGE QUANTITIES

PLAN SHEET No.	DRAINAGE SYSTEM No. ⬡	DRAINAGE UNIT No. ○	18" SCSP (0.064" THICK)	PIPE JOINT CLASSIFICATION (N)	18" x 12" CSP TEE (N)	18" 22°30' CSP ELBOW (N)	MODIFY INLET	18" END CAP (N)	MISCELLANEOUS IRON AND STEEL	DESCRIPTION	LOCATION
			LF		EA	EA	EA	EA	LB		
C-8	1	a	32	W	1			2		32' x 18" SCSP	108.83' R+ 2809+51.64 "SD8"
C-9	2	a					1		44	MODIFY G2 INLET	108.79' L+ 2809+21.64 "SD8"
C-9	2	b	22	W		1				22' x 18" SCSP	108.79' L+ 2809+43.62 "SD8"
TOTAL			54				1		44		

NOTES: 1. (N) NOT A SEPARATE PAY ITEM, FOR INFORMATION ONLY.
2. PIPE JOINT CLASSIFICATION: W=WATERTIGHT

EDGE DRAIN QUANTITIES

LOCATION				3" PLASTIC PIPE (EDGE DRAIN)	3" PLASTIC PIPE (EDGE DRAIN OUTLET)						
					TYPE B OUTLET	TYPE 1 MODIFIED OUTLET	TYPE 1 MODIFIED CLEANOUT	TYPE 1 MODIFIED VENT	ELBOW FITTING (N)	"Y" FITTING (N)	3" STEEL PIPE STUB (N)
LINE	SIDE	Beg Sta	END Sta	LF	LF	LF	LF	LF	EA	EA	LF
"SD8"	R+	2803+07.02	2803+73.96	66.9				12.0	1		
"SD8"	R+	2809+49.34	2809+88.39	39.1		2.0	12.8			1	0.3
"SD8"	L+	2802+46.86	2803+72.09	125.2			12.8	12.0	1	1	
"SD8"	L+	2808+81.26	2810+30.43	149.2	12.0				1		
			SUBTOTAL		12.0	2.0	25.6	24.0			
			TOTAL	380.4	63.6						

(N) NOT A SEPARATE PAY ITEM, FOR INFORMATION ONLY

METAL BEAM GUARD RAILING AND CRASH CUSHIONS

MBGR No. ⬡	LAYOUT TYPE (N)	MBGR	DbI MBGR	ALTERNATIVE FLARED TERMINAL SYSTEM	ALTERNATIVE CRASH CUSHION SYSTEM	RAIL TENSIONING ASSEMBLY	TRANSITION RAILING (TYPE WB)	BURIED POST END ANCHOR (N)	END CAP (TYPE TC) (N)	REMOVE MBB	CONNECTION TO Exist BARRIER RAILING TYPE 9-11 ALTERNATIVE 3 (N)	GUARD RAILING DELINEATOR	
											MINOR Conc (MINOR Str)	TYPE F	TYPE G
		LF	LF	EA	EA	EA	EA	EA	EA	LF	CY	EA	EA
1	12B	700.0		1			1		1	71.5	0.93	4	
2	12E	25.0	437.5		1	1	1		1	103.7	0.93		3
3	12E	25.0	437.5		1	1	1		1	103.7	0.93		3
4	12C	812.5					1	1	1	410.4	0.93	4	
TOTAL		1562.5	875.0	1	2	2	4	1	4	689.3	3.72	14	

(N) NOT A SEPARATE PAY ITEM, FOR INFORMATION ONLY

SUMMARY OF QUANTITIES
Q-11

STATE OF CALIFORNIA - DEPARTMENT OF TRANSPORTATION
Caltrans® DESIGN
FUNCTIONAL SUPERVISOR: ED HAJJ
CALCULATED-DESIGNED BY: TOM GUERRINI
CHECKED BY: YUSUF RAHMAN
REVISED BY
DATE REVISED

LAST REVISION 01-13-11 DATE PLOTTED => 07-FEB-2011 TIME PLOTTED => 16:05

DIST	COUNTY	ROUTE	POST MILES TOTAL PROJECT	SHEET NO.	TOTAL SHEETS
11	SD	8	R39.7/R61.5	47	71

Randell D. Hiatt
REGISTERED CIVIL ENGINEER

June 6, 2008
PLANS APPROVAL DATE

REGISTERED PROFESSIONAL ENGINEER
Randell D. Hiatt
No. C50200
Exp. 6-30-09
CIVIL
STATE OF CALIFORNIA

The State of California or its officers or agents shall not be responsible for the accuracy or completeness of electronic copies of this plan sheet.

To accompany plans dated 01-18-11

NOTES:

1. When necessary to place dike in front of face of guard railing, only Type C dike may be used. For dike details, see Standard Plan A87B.
2. For standard railing post embedment, see Standard Plans A77C3.
3. Guard railing delineation to be used where shown on the Project Plans.
4. When dike or curb is placed under guard railing, the maximum height of the dike or curb shall be 4". Mountable dike should not be used. For dike and curb details, see Revised Standard Plans RSP A87A and Standard Plan A87B.
5. For details of typical distance between the face of rail and hinge point, see Standard Plan A77C3.

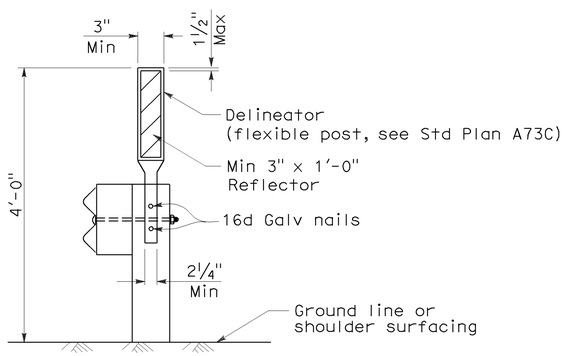

GUARD RAILING DELINEATION

See Note 3

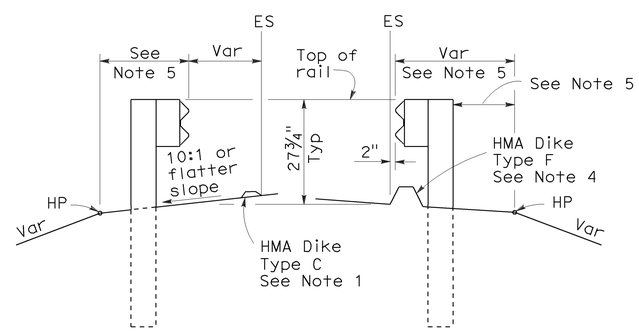

DIKE POSITIONING

See Note 1

STATE OF CALIFORNIA
DEPARTMENT OF TRANSPORTATION

METAL BEAM GUARD RAILING TYPICAL RAILING DELINEATION AND DIKE POSITIONING DETAILS

NO SCALE

RSP A77C4 DATED JUNE 6, 2008 SUPERSEDES STANDARD PLAN A77C4
DATED MAY 1, 2006 - PAGE 47 OF THE STANDARD PLANS BOOK DATED MAY 2006.

REVISED STANDARD PLAN RSP A77C4

2006 REVISED STANDARD PLAN RSP A77C4

12-10-07

DIST	COUNTY	ROUTE	POST MILES TOTAL PROJECT	SHEET NO.	TOTAL SHEETS
11	SD	8	R39.7/R61.5	48	71

Randell D. Hiatt
REGISTERED CIVIL ENGINEER

June 6, 2008
PLANS APPROVAL DATE

REGISTERED PROFESSIONAL ENGINEER Randell D. Hiatt No. C50200 Exp. 6-30-09 CIVIL STATE OF CALIFORNIA

The State of California or its officers or agents shall not be responsible for the accuracy or completeness of electronic copies of this plan sheet.

To accompany plans dated 01-18-11

2006 REVISED STANDARD PLAN RSP A77E1

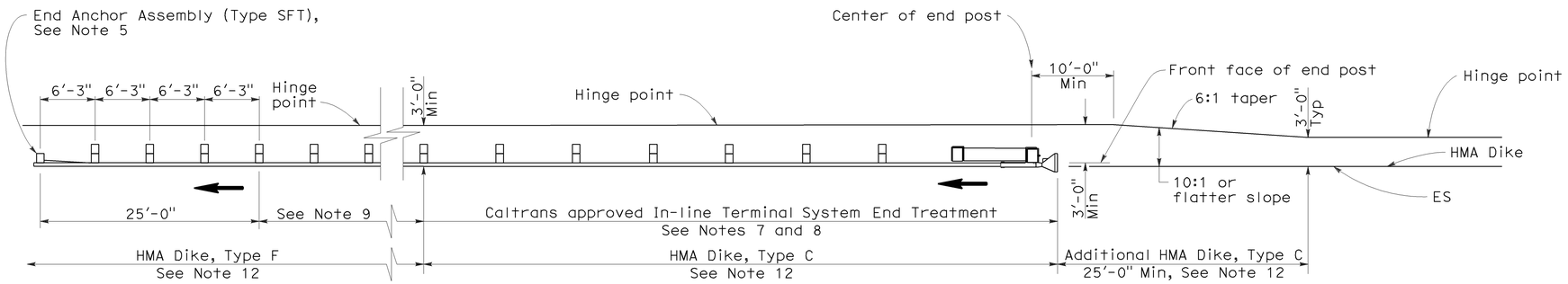

TYPE 11A LAYOUT

(EMBANKMENT GUARD INSTALLATION WITH IN-LINE END TREATMENT AT TRAFFIC APPROACH END OF RAILING)
See Note 6

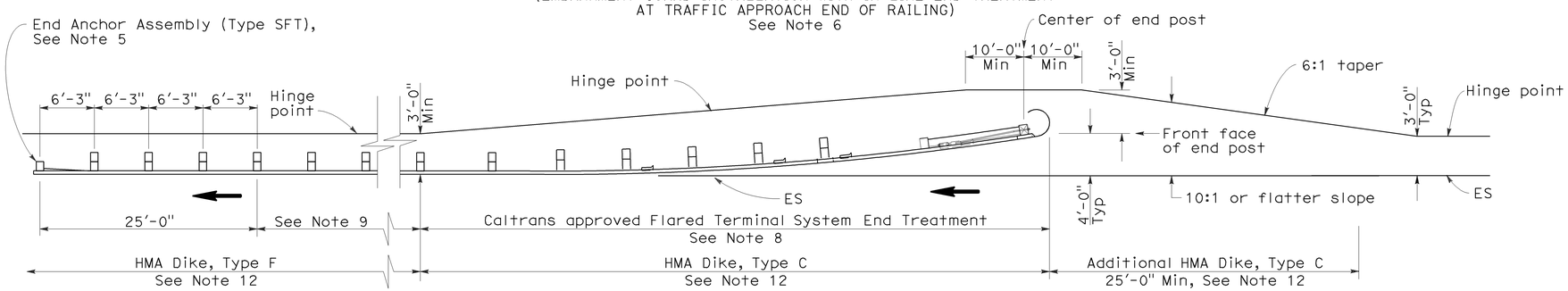

TYPE 11B LAYOUT

(EMBANKMENT GUARD RAILING INSTALLATION WITH FLARED END TREATMENT AT TRAFFIC APPROACH END OF RAILING)
See Note 6

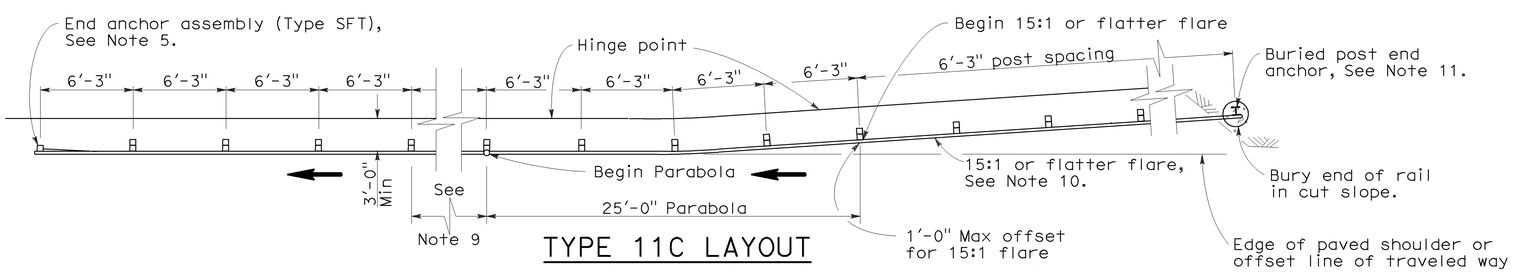

TYPE 11C LAYOUT

(EMBANKMENT GUARD RAILING INSTALLATION WITH BURIED END ANCHOR TREATMENT AT TRAFFIC APPROACH END OF RAILING)
See Notes 6 and 12

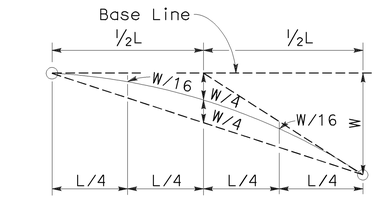

TYPICAL PARABOLIC LAYOUT

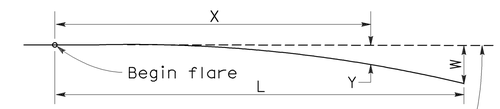

Base Line (Edge of paved shoulder or offset line of edge of traveled way)

$$Y = \frac{WX^2}{L^2}$$

Y = Offset from base line
W = Maximum offset
X = Distance along base line
L = Length of flare

PARABOLIC FLARE OFFSETS

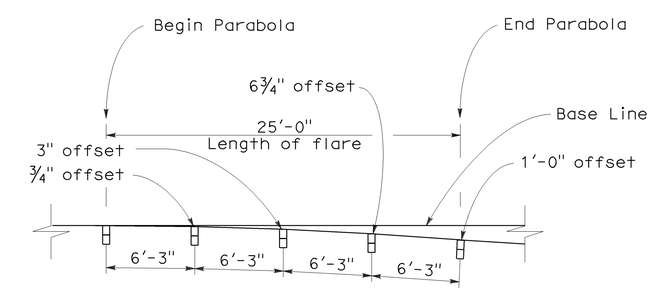

TYPICAL FLARE OFFSETS FOR 1 FOOT MAX END OFFSET

NOTES:

1. Line post, blocks and hardware to be used are shown on Standard Plans A77A1, A77A2, A77B1, A77C1, and A77C2.
2. Guard rail post spacing to be 6'-3" center to center, except as otherwise noted.
3. Except as noted, line posts are 6" x 8" x 6'-0" wood with 6" x 8" x 1'-2" wood blocks. W6 x 9 steel posts, 6'-0" in length, with 6" x 8" x 1'-2" notched wood blocks or recycled plastic blocks may be used for 6" x 8" x 6'-0" wood post with 6" x 8" x 1'-2" wood blocks where applicable and when specified.
4. Direction of adjacent traffic indicated by ⟶.
5. For End Anchor Assembly (Type SFT) details, see Standard Plan A77H1.
6. Layout Types 11A, 11B or 11C are typically used where guard railing is recommended to shield embankment slopes and a crashworthy end treatment is required for only one direction of traffic.
7. In-line Terminal System End Treatments are used where site conditions will not accommodate a flared end treatment.
8. The type of terminal system end treatment to be used will be shown on the Project Plans.
9. Dependent on site conditions (embankment height and side slope), construction of additional guard railing (length equal to multiples of 12'-6" with 6'-3" post spacing) may be advisable.
10. The 15:1 or flatter flare used with buried end anchors is based on the edge of the paved shoulder or offset line of edge of the traveled way. The length of guard railing within the 15:1 or flatter flare is based on site conditions and should be a length equal to multiples of 12'-6".
11. For details of the buried post end anchor used with Type 11C Layout, see Standard Plan A77I2.
12. Where placement of dike is required with guard railing installations, see Revised Standard Plan RSP A77C4 for dike positioning details.

STATE OF CALIFORNIA
DEPARTMENT OF TRANSPORTATION

METAL BEAM GUARD RAILING TYPICAL LAYOUTS FOR EMBANKMENTS

NO SCALE

RSP A77E1 DATED JUNE 6, 2008 SUPERSEDES STANDARD PLAN A77E1 DATED MAY 1, 2006 - PAGE 48 OF THE STANDARD PLANS BOOK DATED MAY 2006.

REVISED STANDARD PLAN RSP A77E1

12-10-07

DIST	COUNTY	ROUTE	POST MILES TOTAL PROJECT	SHEET NO.	TOTAL SHEETS
11	SD	8	R39.7/R61.5	49	71

Randell D. Hiatt
REGISTERED CIVIL ENGINEER

June 6, 2008
PLANS APPROVAL DATE

REGISTERED PROFESSIONAL ENGINEER
Randell D. Hiatt
No. C50200
Exp. 6-30-09
CIVIL
STATE OF CALIFORNIA

The State of California or its officers or agents shall not be responsible for the accuracy or completeness of electronic copies of this plan sheet.

To accompany plans dated 01-18-11

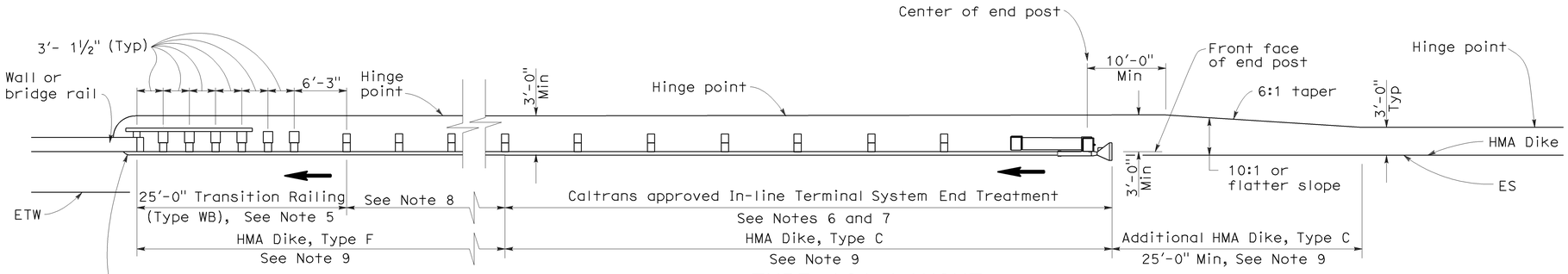

TYPE 12A LAYOUT

(GUARD RAILING INSTALLATION AT STRUCTURE APPROACH WITH AN IN-LINE END TREATMENT AT TRAFFIC APPROACH END OF RAILING)
See Notes 10

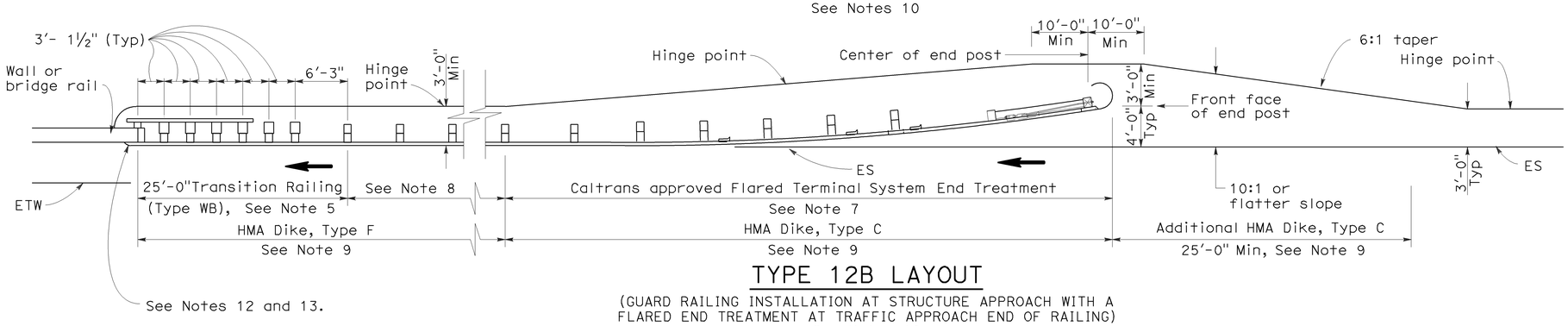

TYPE 12B LAYOUT

(GUARD RAILING INSTALLATION AT STRUCTURE APPROACH WITH A FLARED END TREATMENT AT TRAFFIC APPROACH END OF RAILING)
See Notes 10

NOTES:

1. Line post, blocks and hardware to be used are shown on Standard Plans A77A1, A77A2, A77B1, A77C1 and A77C2.
2. Guard rail post spacing to be 6'-3" center to center, except as otherwise noted.
3. Except as noted, line posts are 6" x 8" x 6'-0" wood with 6" x 8" x 1'-2" wood blocks. W6 x 9 steel posts, 6'-0" in length, with 6" x 8" x 1'-2" notched wood blocks or plastic blocks may be used for 6" x 8" x 6'-0" wood posts with 6" x 8" x 1'-2" wood blocks where applicable and when specified.
4. Direction of adjacent traffic indicated by ➡.
5. For Transition Railing (Type WB) details for Types 12A and 12B Layouts, see Standard Plan A77J4.
6. In-line Terminal System End Treatments are used where site conditions will not accommodate a flared end treatment.
7. The type of terminal system end treatment to be used will be shown on the Project Plans.
8. Dependent on site conditions (embankment height, side slopes, or other fixed objects), it may be advisable to construct additional guard railing (a length equal to multiples of 12'-6" with 6'-3" post spacing) between the transition railing and end treatment.
9. Where placement of dike is required with guard railing installations, see Revised Standard Plan RSP A77C4 for dike positioning details.
10. Type 12A or Type 12B Layouts are typically used:
    a. To the right of approaching traffic, at the end of a structure, on two-lane conventional highway where the roadbed width across the structure is less than 40 feet.
    b. To the left of approaching traffic, at the end of a structure, on two-lane conventional highway where the roadbed width across the structure is less than 40 feet.
    c. To the right of approaching traffic at the end of each structure on multilane freeways or expressways with separate adjacent or parallel bridges.
    d. To the right of approaching traffic at the end of the structure on multilane freeways or expressways with decked median on the bridge.
11. See Revised Standard Plan RSP A77F3 for typical layout used left of approaching traffic at the ends of each structure on multilane freeways or expressways with separate adjacent or parallel bridges.
12. For additional details of typical connections to bridge rail, see Connection Detail AA on Revised Standard Plans RSP A77J1 and RSP A77J2 and Connection Detail FF on Standard Plans A77K1 and A77K2.
13. For additional details of a typical connection to walls or abutments, see Standard Plan A77J3.

STATE OF CALIFORNIA
DEPARTMENT OF TRANSPORTATION

METAL BEAM GUARD RAILING TYPICAL LAYOUTS FOR STRUCTURE APPROACH

NO SCALE

RSP A77F1 DATED JUNE 6, 2008 SUPERSEDES STANDARD PLAN A77F1
DATED MAY 1, 2006 - PAGE 54 OF THE STANDARD PLANS BOOK DATED MAY 2006.

REVISED STANDARD PLAN RSP A77F1

2006 REVISED STANDARD PLAN RSP A77F1

DIST	COUNTY	ROUTE	POST MILES TOTAL PROJECT	SHEET NO.	TOTAL SHEETS
11	SD	8	R39.7/R61.5	50	71

Randell D. Hiatt
REGISTERED CIVIL ENGINEER

June 6, 2008
PLANS APPROVAL DATE

REGISTERED PROFESSIONAL ENGINEER
Randell D. Hiatt
No. C50200
Exp. 6-30-09
CIVIL
STATE OF CALIFORNIA

The State of California or its officers or agents shall not be responsible for the accuracy or completeness of electronic copies of this plan sheet.

To accompany plans dated 01-18-11

2006 REVISED STANDARD PLAN RSP A77F3

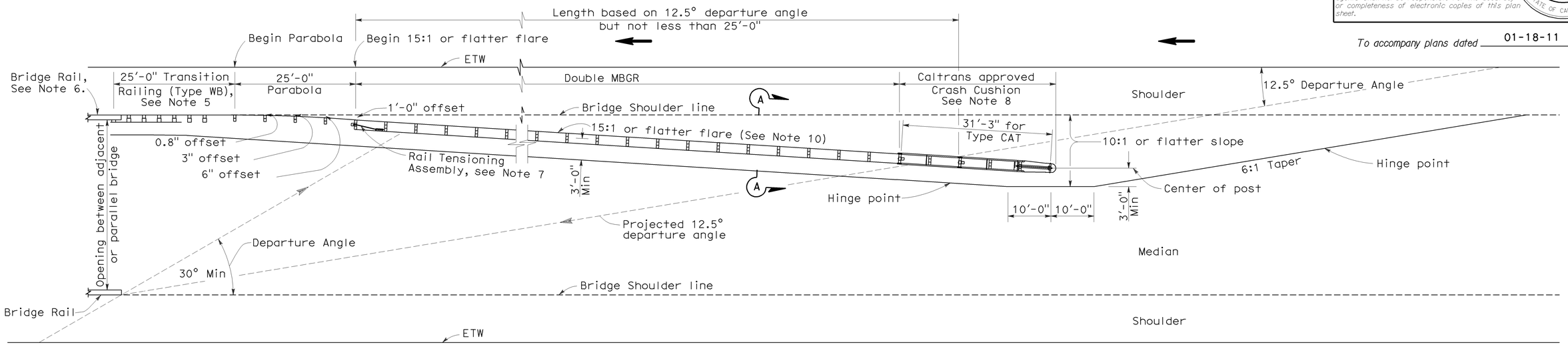

TYPE 12E LAYOUT

See Note 10

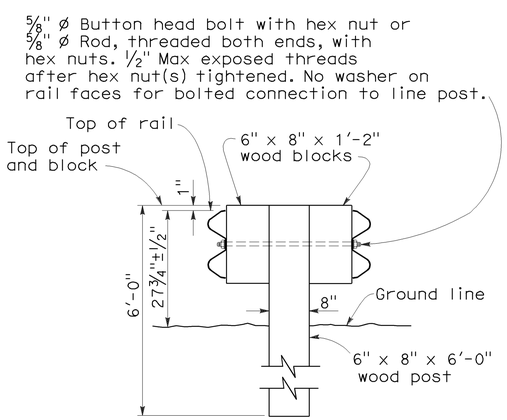

SECTION A-A

TYPICAL DOUBLE METAL BEAM GUARD RAILING

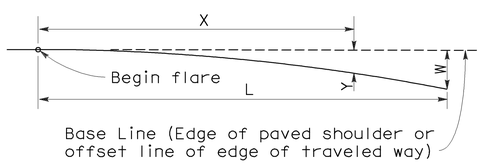

$$Y = \frac{WX^2}{L^2}$$

Y = Offset from base line
W = Maximum offset
X = Distance along base line
L = Length of flare

PARABOLIC FLARE OFFSETS

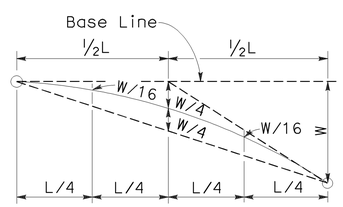

TYPICAL PARABOLIC LAYOUT

NOTES:

1. Line post, blocks and hardware to be used are shown on Standard Plans A77A1, A77A2, A77B1, A77C1 and A77C2.
2. Guard railing post spacing to be 6'-3" center to center, except as otherwise noted.
3. Except as noted, line posts are 6" x 8" x 6'-0" wood with 6" x 8" x 1'-2" wood blocks. W6 x 9 steel posts, 6'-0" in length, with 6" x 8" x 1'-2" notched wood blocks or notched recycled plastic blocks may be used for 6" x 8" x 6'-0" wood line posts with 6" x 8" x 1'-2" wood blocks where applicable and when specified.
4. Direction of adjacent traffic indicated by ⟶.
5. For Transition Railing (Type WB) details, see Standard Plan A77J4.
6. For additional details of a typical connection to bridge rail, see Connection Detail AA on Revised Standard Plan RSP A77J1.
7. For Rail Tensioning Assembly details, see Standard Plan A77H2.
8. The type of Crash Cushion to be used will be shown on the Project Plans.
9. Type 12E Layout is typically used left of approaching traffic at the end of each structure on multilane freeways or expressways where a median type barrier is not constructed between separated roadbeds.
10. The 15:1 or flatter flare is measured off of the edge of traveled way.

STATE OF CALIFORNIA
DEPARTMENT OF TRANSPORTATION

METAL BEAM GUARD RAILING TYPICAL LAYOUTS FOR STRUCTURE APPROACH

NO SCALE

RSP A77F3 DATED JUNE 6, 2008 SUPERSEDES STANDARD PLAN A77F3
DATED MAY 1, 2006 - PAGE 56 OF THE STANDARD PLANS BOOK DATED MAY 2006.

REVISED STANDARD PLAN RSP A77F3

12-10-07

DIST	COUNTY	ROUTE	POST MILES TOTAL PROJECT	SHEET NO.	TOTAL SHEETS
11	SD	8	R39.7/R61.5	51	71

Randell D. Hiatt
REGISTERED CIVIL ENGINEER

June 6, 2008
PLANS APPROVAL DATE

REGISTERED PROFESSIONAL ENGINEER
Randell D. Hiatt
No. C50200
Exp. 6-30-09
CIVIL
STATE OF CALIFORNIA

The State of California or its officers or agents shall not be responsible for the accuracy or completeness of electronic copies of this plan sheet.

To accompany plans dated 01-18-11

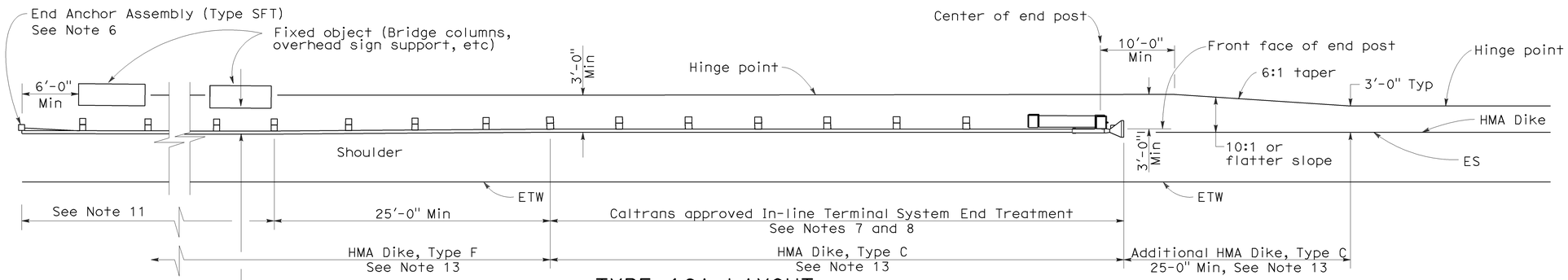

TYPE 16A LAYOUT

(GUARD RAILING INSTALLATION AT ROADSIDE FIXED OBJECT OR OBJECTS WITH AN IN-LINE END TREATMENT AT TRAFFIC APPROACH END OF RAILING)
See Notes 12 and 13

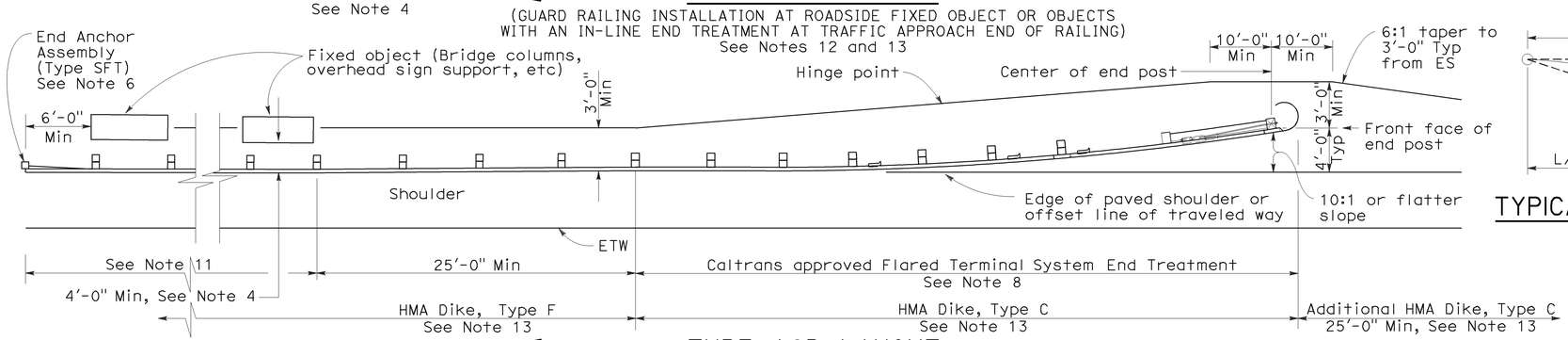

TYPE 16B LAYOUT

(GUARD RAILING INSTALLATION AT ROADSIDE FIXED OBJECT OR OBJECTS WITH A FLARED END TREATMENT AT TRAFFIC APPROACH END OF RAILING)
See Notes 12 and 13

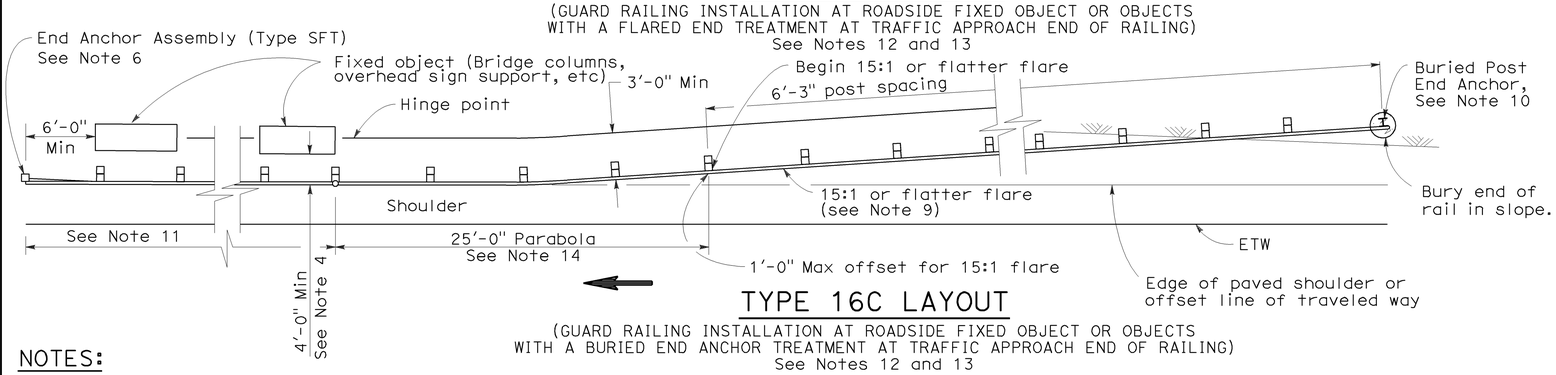

TYPE 16C LAYOUT

(GUARD RAILING INSTALLATION AT ROADSIDE FIXED OBJECT OR OBJECTS WITH A BURIED END ANCHOR TREATMENT AT TRAFFIC APPROACH END OF RAILING)
See Notes 12 and 13

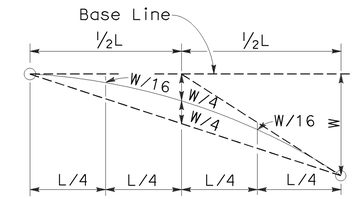

TYPICAL PARABOLIC LAYOUT

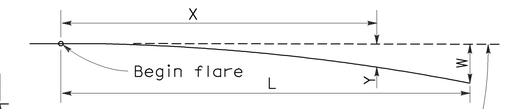

Base Line (Edge of paved shoulder or offset line of edge of traveled way)

$$Y = \frac{WX^2}{L^2}$$

Y = Offset from base line
W = Maximum offset
X = Distance along base line
L = Length of flare

PARABOLIC FLARE OFFSETS

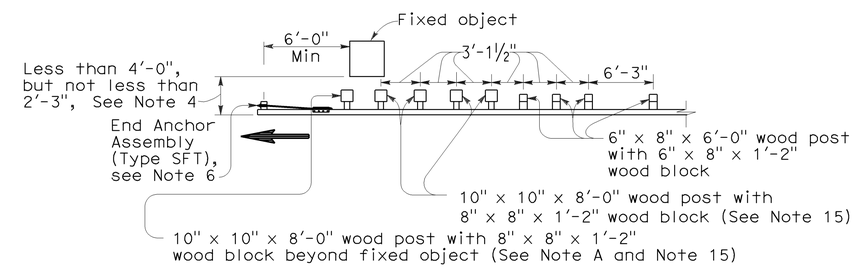

NOTE A: For a series of fixed objects (bridge columns, overhead sign supports, etc.) additional 10" x 10" x 8'-0" wood post with 8" x 8" x 1'-2" wood blocks at 3'-1½" center to center spacing are to be used between fixed objects.

STRENGTHENED RAILING SECTIONS FOR FIXED OBJECT

Use strengthened railing sections with Types 16A, 16B or 16C Layouts where minimum clearance between the face of the guard railing and fixed object(s) is less than 4'-0", but not less than 2'-3". See Note 4

NOTES:

1. Line post, blocks and hardware to be used are shown on Revised Standard Plans A77A1, A77A2, A77B1, A77C1 and A77C2.
2. Guard railing post spacing to be 6'-3" center to center, except as otherwise noted.
3. Except as noted, line posts are 6" x 8" x 6'-0" wood with 6" x 8" x 1'-2" wood blocks. W6 x 9 steel posts, 6'-0" in length, with 6" x 8" x 1'-2" notched wood blocks or notched recycled plastic blocks may be used for 6" x 8" x 6'-0" wood line posts with 6" x 8" x 1'-2" wood blocks where applicable and when specified.
4. A 4'-0" minimum clearance is required between the face of the railing and the face of a fixed object located directly behind standard guard railing sections with post spacing of 6'-3". Construct guard railing as shown in the detail "Strengthened Railing Sections for Fixed Objects" on this plan, where the clearance between the face of the railing and the face of a fixed object is less than 4'-0", but not less than 2'-3". Where the clearance is less than 2'-3", a concrete wall or barrier should be constructed to shield the fixed object(s).
5. Direction of adjacent traffic indicated by ⟶.
6. For End Anchor Assembly (Type SFT) details, see Standard Plan A77H1.
7. In-line Terminal System End Treatments are used where site conditions will not accommodate a flared end treatment.
8. The type of terminal system to be used will be shown on the Project Plans.
9. The 15:1 or flatter flare used with Type 16C Layout is based on the edge of the paved shoulder or offset line of edge of the traveled way. The length of guard railing within the 15:1 or flatter flare is based on site conditions and should be a length equal to multiples of 12'-6".
10. For details of the Buried Post End Anchor used with Type 16C Layout, see Standard Plan A77I2.
11. As site conditions dictate, construct additional guard railing to shield fixed object(s). Additional guard railing length equal to multiples of 12'-6". Post spacing at 6'-3" except as specified in Note 4.
12. Layout Types 16A, 16B or 16C are typically used where guard railing is recommended to shield roadside fixed object(s) and a crashworthy end treatment is required for only one direction of traffic.
13. Where placement of dike is required with guard railing, see Revised Standard Plan RSP A77C4 for dike positioning details.
14. For typical flare offsets for 25'-0" length parabola with maximum offset of 1'-0", see Revised Standard Plan RSP A77E1.
15. W6 x 15 steel post, 8'-0" in length, with 8" x 8" x 1'-2" notched wood block or notched recycled plastic blocks may be used in place of the 10" x 10" x 8'-0" wood post with 8" x 8" x 1'-2" wood block shown in the "Strengthened Railing Sections Detail".

STATE OF CALIFORNIA
DEPARTMENT OF TRANSPORTATION

METAL BEAM GUARD RAILING TYPICAL LAYOUTS FOR ROADSIDE FIXED OBJECTS

NO SCALE

RSP A77G3 DATED JUNE 6, 2008 SUPERSEDES STANDARD PLAN A77G3 DATED MAY 1, 2006 - PAGE 61 OF THE STANDARD PLANS BOOK DATED MAY 2006.

REVISED STANDARD PLAN RSP A77G3

2006 REVISED STANDARD PLAN RSP A77G3

12-10-07

DIST	COUNTY	ROUTE	POST MILES TOTAL PROJECT	SHEET NO.	TOTAL SHEETS
11	SD	8	R39.7/R61.5	52	71

Randell D. Hiatt
REGISTERED CIVIL ENGINEER

June 5, 2009
PLANS APPROVAL DATE

REGISTERED PROFESSIONAL ENGINEER
Randell D. Hiatt
No. C50200
Exp. 6-30-09
CIVIL
STATE OF CALIFORNIA

The State of California or its officers or agents shall not be responsible for the accuracy or completeness of electronic copies of this plan sheet.

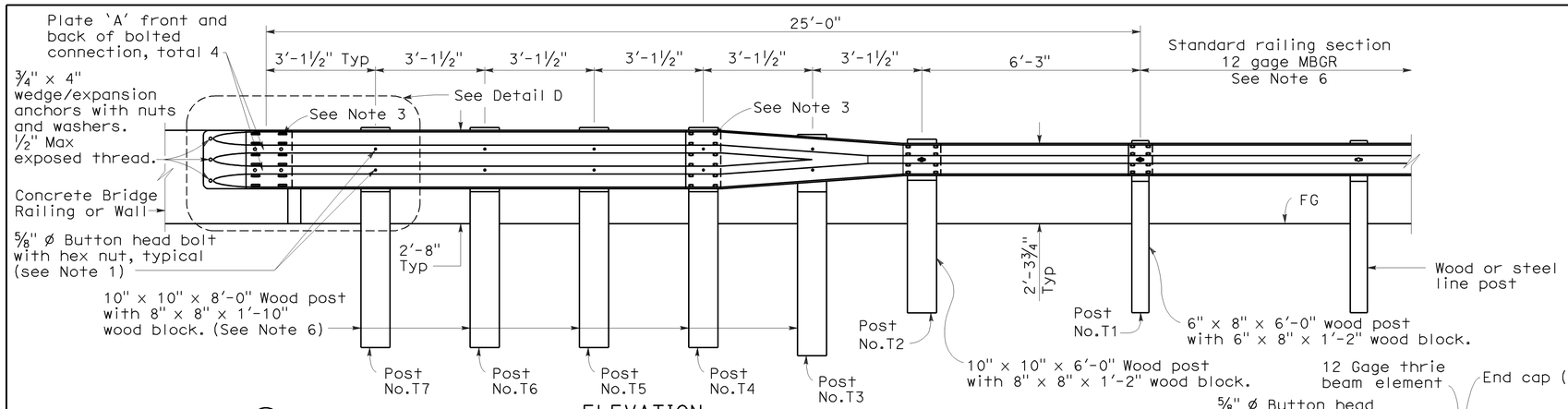

ELEVATION

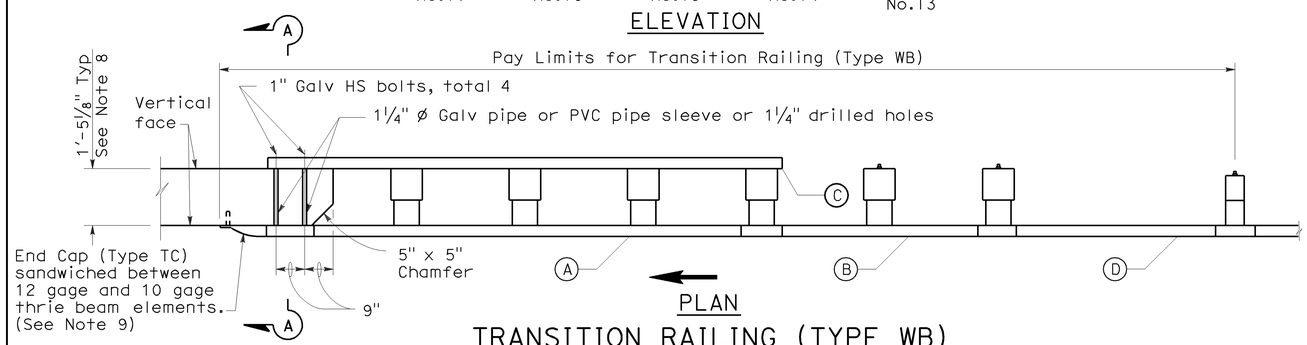

PLAN

TRANSITION RAILING (TYPE WB)

(No Blockout Attachment)

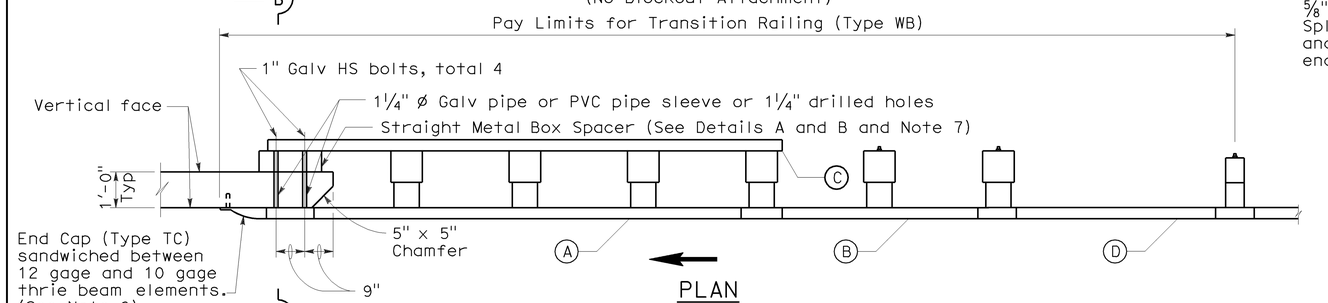

PLAN

TRANSITION RAILING (TYPE WB)

(Blockout Attachment)

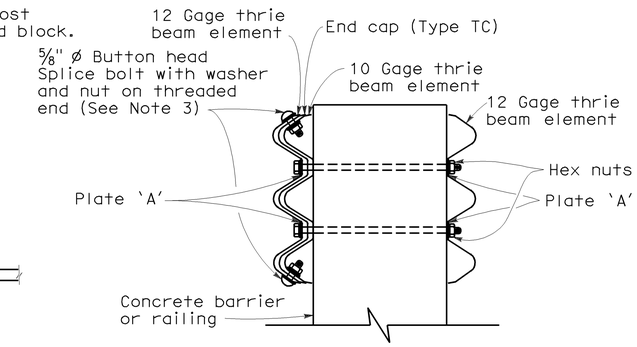

SECTION A-A

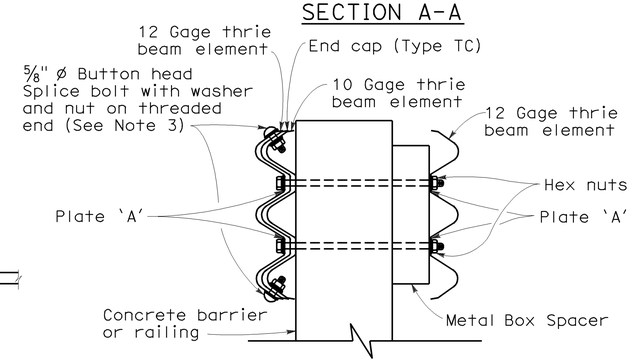

SECTION B-B

LEGEND

(A) Nested thrie beam elements (one 12 gage element nested over one 10 gage element).

(B) One 10 gage "W" beam to thrie beam element.

(C) One 12 gage thrie beam element.

(D) One 10 gage "W" beam rail element (7'-3½" length)

10 gage = 0.135" thick

12 gage = 0.108" thick

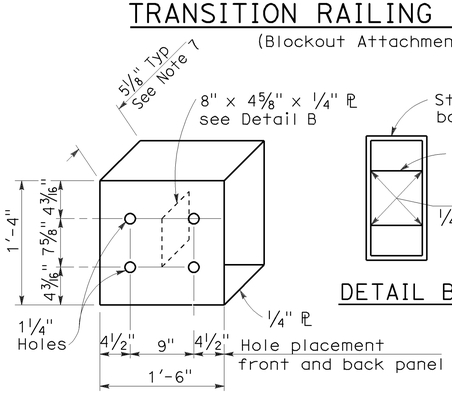

DETAIL A

STRAIGHT METAL BOX SPACER

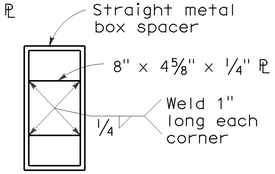

DETAIL B

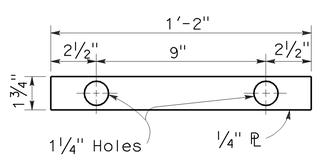

DETAIL C

PLATE 'A'

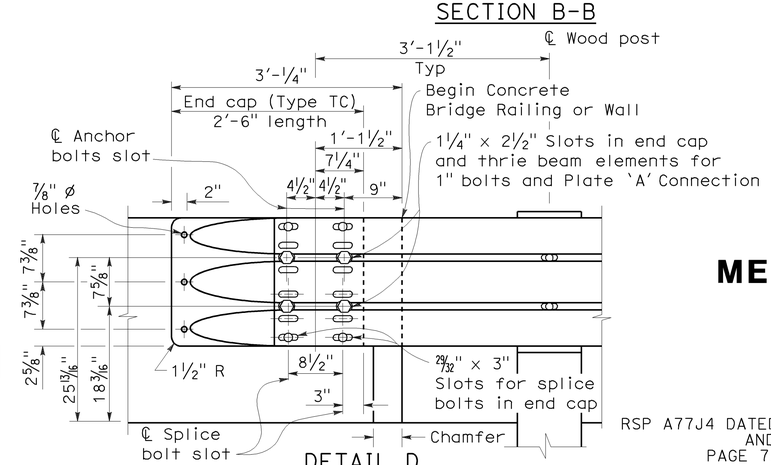

DETAIL D

NOTES:

To accompany plans dated 01-18-11

1. Use 5/8 " ø Button head bolts and hex nuts for connections to posts. No washer on rail face for bolted connections to post.
2. The nested rail elements, end cap, and 'W' beam to thrie beam element may be spliced together prior to bolting the elements to the wood post and concrete barrier or railing.
3. Exterior splice bolt holes for rail element splices at Post No.T4 and the connection to the concrete barrier or railing shall be the standard 29/32 " x 1 1/8 " slot size. Interior splice bolt holes at these locations may be increased up to 1 1/4 " ø. Only the top 2 and the bottom 2 splice bolts with washers and nuts are required for rail splices at Post No.T4 and the connection to the concrete barrier or railing.
4. Direction of adjacent traffic indicated by ⟶.
5. The top elevation of Post Nos.T2 through T7 shall not project more than 1" above the top elevation of the rail element.
6. Typically, the railing connected to Transition Railing (Type WB) will be either standard railing section of metal beam guard railing or an approved Caltrans end treatment attached to Post No.T1.
7. The depth of the metal box spacer varies from the 5 1/8 " to 1 1/2 " and is dependent on the width of the concrete railing or wall. The combined dimension for the depth of the metal box spacer plus the width of railing or wall is typically 17 1/8 ". Where the space between the backside of the concrete railing or wall and the rear thrie beam element is less than 1 1/2 ", metal plates similar to Plate 'A' are to be used as spacers.
8. Where the width of the concrete railing or wall is greater than 17 1/8 ", wood blocks are to be used to fill the space created between the backside of Posts No.4 through No.7 and the rear thrie beam element. These wood blocks shall be 8" in width and 1'-2" in length. The dimension between the front thrie beam element and the rear thrie beam element is to match the width of the concrete railing or wall.
9. End cap may be installed over 12 gage and 10 gage thrie beam elements where transition railing is installed on the departure end of bridge railing.

STATE OF CALIFORNIA
DEPARTMENT OF TRANSPORTATION

METAL BEAM GUARD RAILING TRANSITION RAILING (TYPE WB)

NO SCALE

RSP A77J4 DATED JUNE 5, 2009 SUPERSEDES RSP A77J4 DATED JUNE 6, 2008 AND STANDARD PLAN A77J4 DATED MAY 1, 2006 - PAGE 75 OF THE STANDARD PLANS BOOK DATED MAY 2006.

REVISED STANDARD PLAN RSP A77J4

2006 REVISED STANDARD PLAN RSP A77J4

5-14-09

DIST	COUNTY	ROUTE	POST MILES TOTAL PROJECT	SHEET No.	TOTAL SHEETS
11	SD	8	R39.7/R61.5	53	71

Randell D. Hiatt
REGISTERED CIVIL ENGINEER

June 6, 2008
PLANS APPROVAL DATE

REGISTERED PROFESSIONAL ENGINEER
Randell D. Hiatt
No. C50200
Exp. 6-30-09
CIVIL
STATE OF CALIFORNIA

The State of California or its officers or agents shall not be responsible for the accuracy or completeness of electronic copies of this plan sheet.

To accompany plans dated 01-18-11

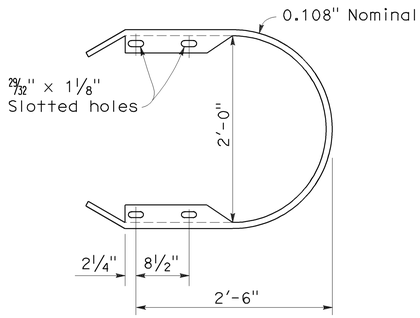

RETURN CAP
(TYPE TA)

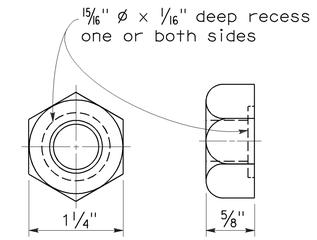

5/8" ø RECESS NUT

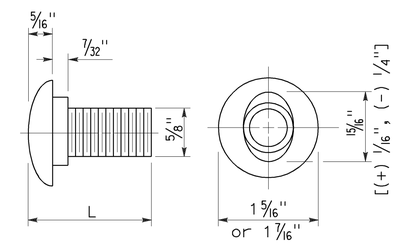

5/8" ø BUTTON HEAD BOLT

L	THREAD LENGTH
1 1/4"	full thread length
2"	full thread length
9 1/2"	4" Min thread length
18"	4" Min thread length

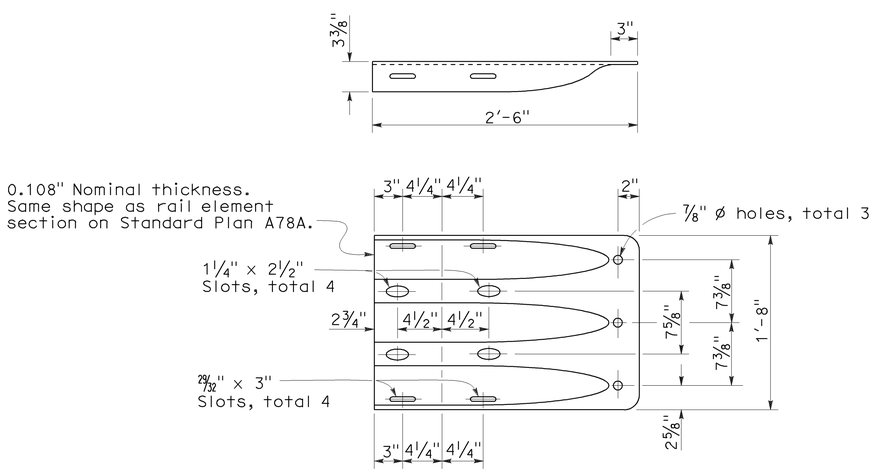

END CAP
(TYPE TC)

STATE OF CALIFORNIA
DEPARTMENT OF TRANSPORTATION

THRIE BEAM BARRIER STANDARD HARDWARE DETAILS

NO SCALE

RSP A78C1 DATED JUNE 6, 2008 SUPERSEDES STANDARD PLAN A78C1
DATED MAY 1, 2006 - PAGE 85 OF THE STANDARD PLANS BOOK DATED MAY 2006.

REVISED STANDARD PLAN RSP A78C1

2006 REVISED STANDARD PLAN RSP A78C1

4-21-08

DIST	COUNTY	ROUTE	POST MILES TOTAL PROJECT	SHEET NO.	TOTAL SHEETS
11	SD	8	R39.7/R61.5	54	71

REGISTERED CIVIL ENGINEER

October 5, 2007
PLANS APPROVAL DATE

REGISTERED PROFESSIONAL ENGINEER Efthymios Delis No. C51434 Exp. 6-30-08 CIVIL STATE OF CALIFORNIA

The State of California or its officers or agents shall not be responsible for the accuracy or completeness of electronic copies of this plan sheet.

To accompany plans dated 01-18-11

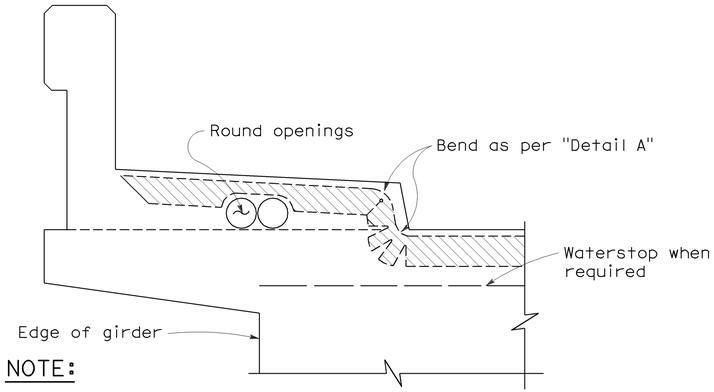

NOTE:

Type "B" seal shown. Type "A" seals to comform to the general path of seal shown, cuts for bending not required. Bend Type "A" seals 3" up into curb or barrier rail on only the low end of the seal.

CONCRETE BARRIER AND SIDEWALK

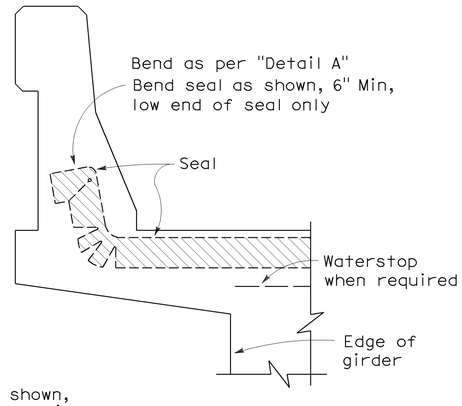

CONCRETE BARRIER

JOINT SEALS DETAILS

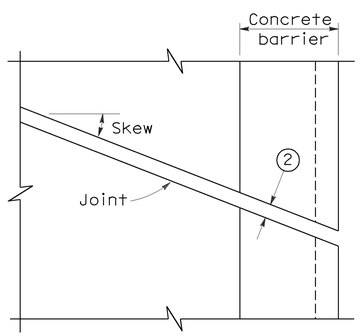

PLAN OF JOINT (SKEW ≤ 20°)

Min ℄ radius to be 4 times uncompressed width of seal or as recommended by the manufacturer, whichever is greater

In lieu of saw cutting, this area may be blocked out and reconstructed to match saw cutting on both sides.

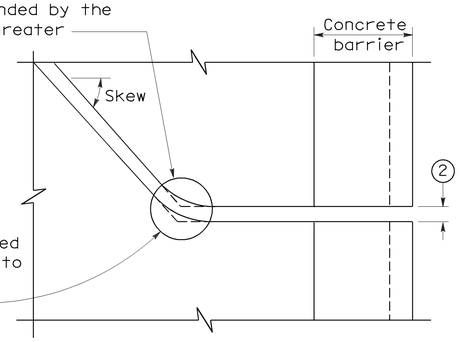

PLAN OF JOINT (SKEW > 20°)

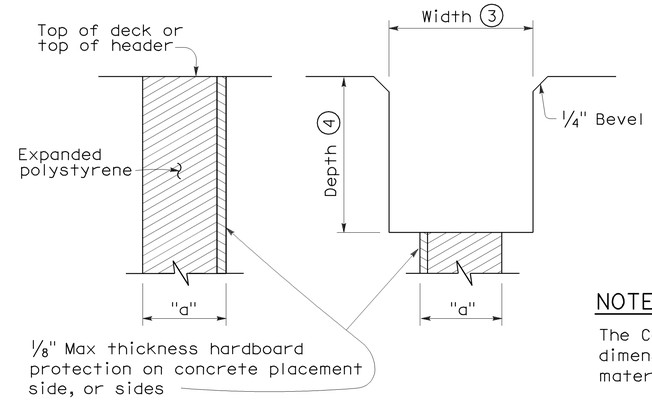

FORMING DETAIL SAWCUT DETAIL

NOTE:

The Contractor shall verify all controlling field dimensions before ordering or fabricatiing any material.

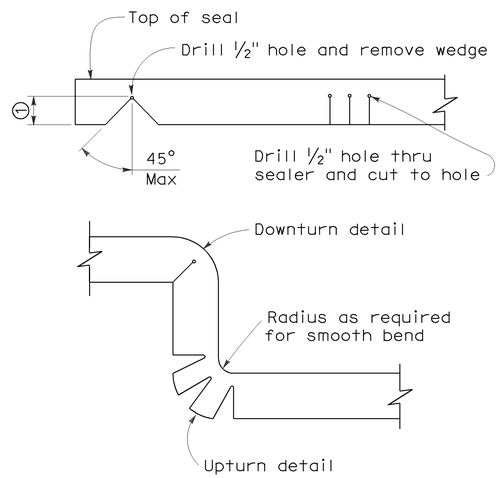

DETAIL A

NOTES:

1. Make smooth cuts from the bottom of seal to 1½" clear of top leaving at least one complete cell between the top of the cut and top of the seal. When necessary cut back of seal to clear conduit and round openings.
2. Opening in barrier to match width of sawn deck joint.
3. Sawcut groove widths shall be as ordered by the Engineer.
4. Depth of sawcut: Type A - Depth to be 2" minimum.
   Type B - Depth to be equal to or greater than the depth of seal measured along the contact surface, when compressed to minimum width position (W_2) plus dimensions shown.
5. MR (movement rating) as shown on other plan sheets.
6. Other depths must be approved by the Engineer.

DIMENSIONS "a" OF JOINT REQUIRED

Movement Rating (MR) 5	Bridge Type	"a" Dimension Deck Concrete Placed		
		Winter	Fall-Spring	Summer
2"	All except CIP/PS	1½"	1¼"	¾"
	CIP/PS	1¼"	1"	½"
1½"	All except CIP/PS	1¼"	1"	½"
	CIP/PS	1"	¾"	½"
1"	All except CIP/PS	1"	¾"	½"
	CIP/PS	¾"	½"	½"
½"	All except CIP/PS	¾"	¾"	½"
	CIP/PS	½"	½"	½"

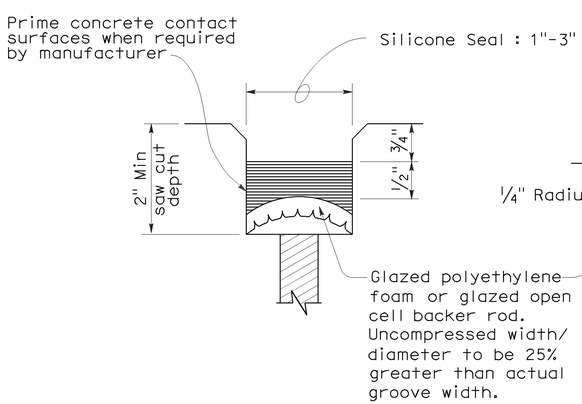

TYPE A SEAL

Movement rating : Silicone = 1" Max

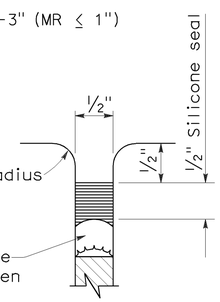

TYPE AL SEAL

Longitudinal joints only

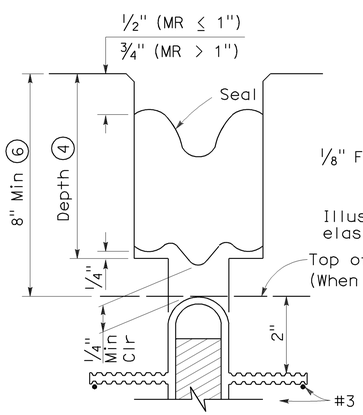

TYPE B JOINT SEAL
IN MINIMUM WIDTH POSITION (W_2)

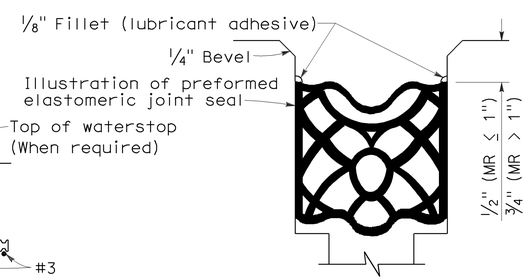

TYPE B SEAL

Movement Rating ≤ 2"

STATE OF CALIFORNIA
DEPARTMENT OF TRANSPORTATION

JOINT SEALS (MAXIMUM MOVEMENT RATING = 2")

NO SCALE

RSP B6-21 DATED OCTOBER 5, 2007 SUPERSEDES STANDARD PLAN B6-21 DATED MAY 1, 2006 - PAGE 258 OF THE STANDARD PLANS BOOK DATED MAY 2006.

REVISED STANDARD PLAN RSP B6-21

2006 REVISED STANDARD PLAN RSP B6-21

5-8-07

DIST	COUNTY	ROUTE	POST MILES TOTAL PROJECT	SHEET NO.	TOTAL SHEETS
11	SD	8	R39.7/R61.5	55	71

Raymond Don Tsztoo
REGISTERED CIVIL ENGINEER

January 18, 2008
PLANS APPROVAL DATE

REGISTERED PROFESSIONAL ENGINEER
Raymond Don Tsztoo
No. C37332
Exp. 6-30-08
CIVIL
STATE OF CALIFORNIA

The State of California or its officers or agents shall not be responsible for the accuracy or completeness of electronic copies of this plan sheet.

To accompany plans dated 01-18-11

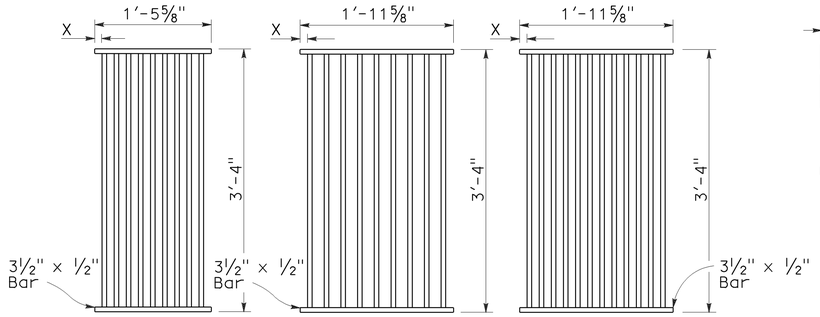

TYPE 18-9

1⅜" Clear spacing. Use within the roadbed on highways where bicycles and pedestrians are excluded.

TYPE 24-9

2" Clear spacing. Use in locations off the roadbed on all types of highways.

TYPE 24-12

1⅜" Clear spacing. Use within the roadbed on highways where bicycles and pedestrians are excluded.

RECTANGULAR GRATE DETAILS

(See table below)

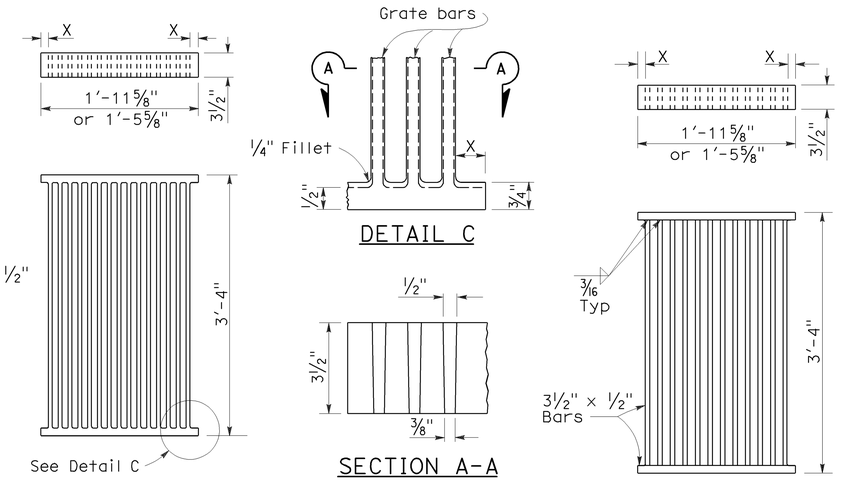

ALTERNATIVE CAST NODULAR IRON GRATE OR CAST STEEL GRATE

ALTERNATIVE WELDED GRATE

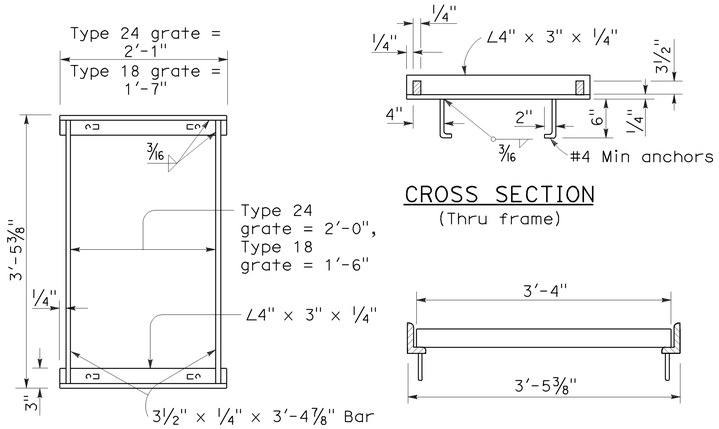

TYPICAL FRAME

CROSS SECTION
(Thru frame)

LONGITUDINAL SECTION
(Thru frame and grate)

RECTANGULAR FRAME DETAILS

(For all rectangular grates)

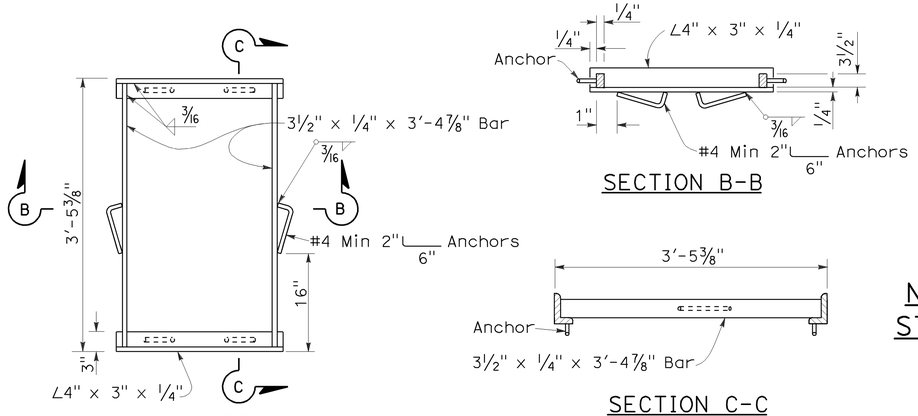

TYPICAL FRAME

SECTION B-B

SECTION C-C

ALTERNATIVE ANCHOR FOR RECTANGULAR FRAME

(For details not shown, See Rectangular Frame Details)

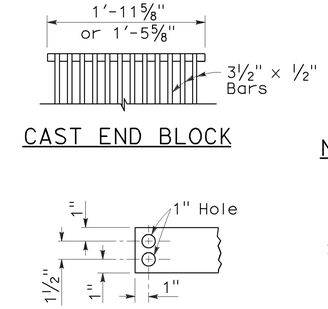

CAST END BLOCK

END OF BAR

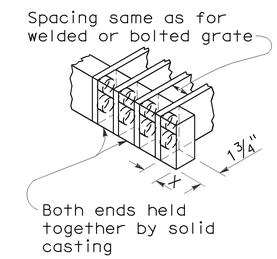

ALTERNATIVE CAST NODULAR IRON OR CAST STEEL END BLOCK GRATE

NOTES:

1. Grate type numbers refer to approximate width of grate in inches and number of bars, respectively.
2. Contractor has the option of using cast nodular iron, cast steel, welded, bolted, or cast end block grate.
3. See Special Provisions for requirements pertaining to galvanizing or asphalt dipping of grates and frames.
4. Rounded top of bars optional on all grates.
5. Pipe inlets with a grate shall be placed so that bars parallel direction of principle surface flow.
6. Full penetration butt welds may be substituted for the fillet welds on all anchors.
7. Standard square, hexagon, round or equivalent headed anchors may be substituted for the right angle hooks on the anchors shown on this plan.
8. Grate and frame weights are based on welded grates (weights of face angles, steps, protection bars, etc. are not included).

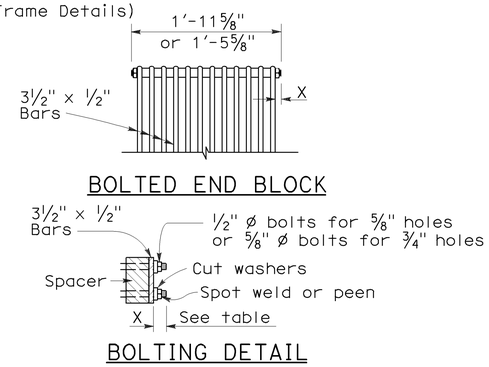

BOLTED END BLOCK

BOLTING DETAIL

ALTERNATIVE BOLTED GRATE

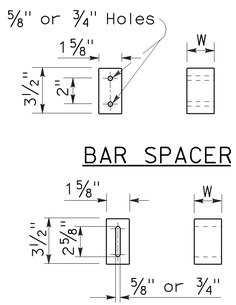

BAR SPACER

ALTERNATIVE SPACER
W = 1⅜" or 2"

GRATE BAR SPACING TABLE

TYPE	No. OF BARS	CLEAR BAR SPACING	X
18-9	9	1⅜"	1 1/16"
24-9	9	2"	1 9/16"
24-12	12	1⅜"	1¼"

INLET TYPE	COVER TYPE	WEIGHT LB
OS	PLATE	174
OL-7	PLATE	170
OL-10	PLATE	170
OL-14	PLATE	170
OL-21	PLATE	170
OCP	PLATE	112
OCPI	PLATE	112
OCPI	REDWOOD	42
OMP	PLATE	177
OMPI	PLATE	177

INLET TYPE	GRATE TYPE	No. OF GRATES	WEIGHT LB
GDO	24-12	2	634
GOL-7	24-12	1	326
GOL-10	24-12	1	326
GO,G1,G2,G3,G4 (TYPE 24)	24-9	1	263
	24-12	1	326
G4 (TYPE 18),G5,G6	18-9	1	249
GT1	18-9	2	498
GT2	18-9	2	498
GT3	24-12	2	652
GT4	24-12	2	652
TRASH RACK			22

BASIS FOR MISC IRON & STEEL FINAL PAY WEIGHTS FOR DRAINAGE INLETS

(See General Notes, No 8)

STATE OF CALIFORNIA
DEPARTMENT OF TRANSPORTATION

GRATE DETAILS

NO SCALE

RSP D77A DATED JANUARY 18, 2008 SUPERSEDES STANDARD PLAN D77A DATED MAY 1, 2006 - PAGE 155 OF THE STANDARD PLANS BOOK DATED MAY 2006.

REVISED STANDARD PLAN RSP D77A

2006 REVISED STANDARD PLAN RSP D77A

12-14-07

DIST	COUNTY	ROUTE	POST MILES TOTAL PROJECT	SHEET NO.	TOTAL SHEETS
11	SD	8	R39.7/R61.5	56	71

Raymond Don Tsztoo
REGISTERED CIVIL ENGINEER

June 6, 2008
PLANS APPROVAL DATE

REGISTERED PROFESSIONAL ENGINEER
Raymond Don Tsztoo
No. C37332
Exp. 6-30-08
CIVIL
STATE OF CALIFORNIA

The State of California or its officers or agents shall not be responsible for the accuracy or completeness of electronic copies of this plan sheet.

To accompany plans dated 01-18-11

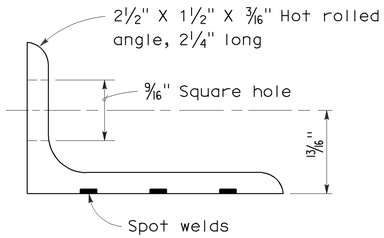

ANGLE

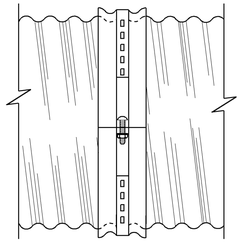

SIDE VIEW
ANGLE

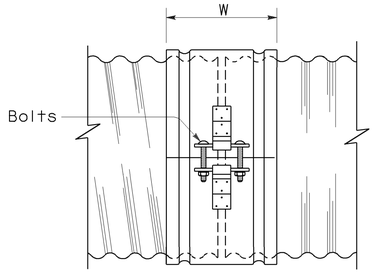

SIDE VIEW
SINGLE BAR AND STRAP

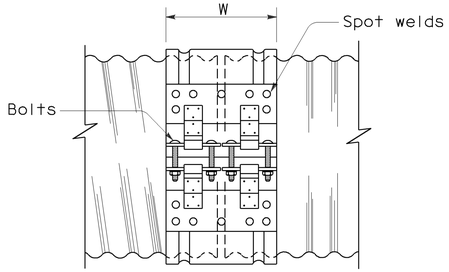

SIDE VIEW
DOUBLE BAR AND STRAP

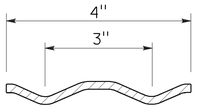

SECTION

H-4 HUGGER BAND

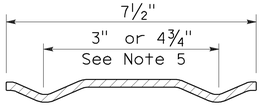

SECTION

H-7 HUGGER BAND

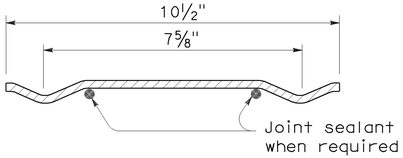

SECTION

H-10 HUGGER BAND

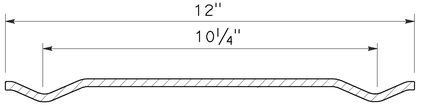

SECTION

H-12 HUGGER BAND

HUGGER COUPLING BANDS

NOTES:

1. All ferrous metal coupling band connection hardware shall be galvanized or electroplated in accordance with the Standard Specifications.
2. Dimensions and thicknesses shown are minimum.
3. Spot welds shall develop minimum required strength of strap.
4. Fillet welds of equivalent strength may be substituted for spot welds or rivets.
5. Dimension depends upon whether end condition is lips up or lips down.

STATE OF CALIFORNIA
DEPARTMENT OF TRANSPORTATION

CORRUGATED METAL PIPE COUPLING DETAILS No. 4 HUGGER COUPLING BANDS

NO SCALE

RSP D97D DATED JUNE 6, 2008 SUPERSEDES STANDARD PLAN D97D
DATED MAY 1, 2006 - PAGE 186 OF THE STANDARD PLANS BOOK DATED MAY 2006.

REVISED STANDARD PLAN RSP D97D

2006 REVISED STANDARD PLAN RSP D97D

3-24-08

DIST	COUNTY	ROUTE	POST MILES TOTAL PROJECT	SHEET NO.	TOTAL SHEETS
11	SD	8	R39.7/R61.5	57	71

Raymond Don Tsztoo
REGISTERED CIVIL ENGINEER

June 6, 2008
PLANS APPROVAL DATE

REGISTERED PROFESSIONAL ENGINEER Raymond Don Tsztoo No. C37332 Exp. 6-30-08 CIVIL STATE OF CALIFORNIA

The State of California or its officers or agents shall not be responsible for the accuracy or completeness of electronic copies of this plan sheet.

ANNULAR AND HELICAL PROFILE

COUPLING TYPE	PIPE CORRUGATION	PIPE SIZE	W OR A	PIPE WALL THICKNESS CSP	PIPE WALL THICKNESS CAP	BAND THICKNESS CSP	BAND THICKNESS CAP	BAR AND STRAP (CSP ONLY) STRAP THICKNESS	BOLTS Dia	BAR Dia	BAR YIELD STRENGTH	ANGLE DIMENSIONS CSP	ANGLE DIMENSIONS CAP	BOLTS (No.- Dia) CSP	BOLTS (No.- Dia) CAP	RIVETS ANGLE TO BAND CSP	RIVETS ANGLE TO BAND CAP	SPOT WELDS ANGLE TO BAND CSP
TWO PIECE INTEGRAL FLANGE	1½′ × ¼"	6"-10"	7"	0.052"-0.079"	0.048"-0.060"	0.052"	0.060"							2-⅜"	2-⅜"			
		12"-18"	7"	0.052"-0.079"		0.064"								2-½"				
	2⅔" × ½"	12"-24"	7"	0.052"-0.079"	0.060"-0.105"	0.064"	0.060"							2-½"	2-½"			
UNIVERSAL	2⅔" × ½"	THROUGH 36"	12"	0.052"-0.138"	0.060"-0.135"	0.052"	0.060"					2" × 2" × 3/16"	2" × 2" × 3/16"	3-½"	3-½"	3-⅜"	3-⅜"	3-½"
		42"-60"	12"	0.052"-0.168"	0.075"-0.164"	0.052"	0.060"					2" × 2" × 3/16"	2" × 2" × 3/16"	3-½"	3-½"	3-⅜"	3-⅜"	5-½"
		THROUGH 72"	12"	0.052"-0.168"	0.164"	0.052"	0.105"	0.079"	½"	⅞"	32 ksi	2" × 2" × 3/16"	2" × 2" × 3/16"	3-½"	3-½"	3-⅜"	3-⅜"	5-½"
		78"-84"	16¼"	0.168"		0.079"		DOUBLE 0.079"	½"	⅞"	32 ksi							
ANNULAR	2⅔" × ½"	THROUGH 36"	7"	0.064"-0.138"	0.060"-0.135"	0.052"	0.060"	0.079"	½"	⅞"	32 ksi	2" × 2" × 3/16"	2" × 2" × 3/16"	2-½"	2-½"	3-⅜"	3-⅜"	3-½"
		42"-72"	12"	0.064"-0.168"	0.075"-0.164"	0.052"	0.105"	0.079"	½"	⅞"	32 ksi	2" × 2" × 3/16"	2" × 2" × 3/16"	3-½"	3-½"	3-⅜"	3-⅜"	5-½"
		78"-84"	12"	0.168"		0.079"		0.109"	½"	⅞"	45 ksi	2" × 2" × 3/16"		3-½"		3-⅜"		5-½"
	3" × 1"	48"-90"	14"	0.064"-0.109"		0.052"		0.079"	½"	⅞"	32 ksi	2" × 2" × 3/16"		3-½"		3-⅜"		5-½"
		96"-120"	14"	0.079"-0.109"		0.052"		0.109"	½"	⅞"	45 ksi	2" × 2" × 3/16"		3-½"		4-⅜"		
		42"-108"	14"		0.060"-0.135"		0.060"						2" × 2" × 3/16"		3-½"		3-⅜"	
HELICAL	2⅔" × ½"	THROUGH 36"	12"	0.052"-0.138"	0.060"-0.135"	0.052"	0.060"	0.079"	½"	⅞"	32 ksi	2" × 2" × 3/16"	2" × 2" × 3/16"	3-½"	3-½"	3-⅜"	3-⅜"	3-½"
		42"-72"	12"	0.052"-0.168"	0.075"-0.164"	0.052"	0.060"	0.079"	½"	⅞"	32 ksi	2" × 2" × 3/16"	2" × 2" × 3/16"	3-½"	3-½"	3-⅜"	3-⅜"	5-½"
		78"-84"	12"	0.168"		0.079"		0.109"	½"	⅞"	45 ksi	2" × 2" × 3/16"		3-½"		3-⅜"		5-½"
	3" × 1"	48"-90"	14"	0.064"-0.109"		0.052"		0.079"	½"	⅞"	32 ksi	2" × 2" × 3/16"		3-½"		3-⅜"		5-½"
		96"-120"	14"	0.079"-0.109"		0.052"		0.109"	½"	⅞"	45 ksi	2" × 2" × 3/16"		3-½"		4-⅜"		
		42"-108"	14"		0.060"-0.135"		0.060"						2" × 2" × 3/16"		3-½"		3-⅜"	
HUGGER	2⅔" × ½" REROLLED END	12"-54"	4"	0.052"-0.109"		0.052"						2½" × 1½" × 3/16"	2½" × 1½" × 3/16"	1-½"				3-½"
		60"-66"	4"	0.109"		0.064"						2½" × 1½" × 3/16"	2½" × 1½" × 3/16"	1-½"				3-½"
		36"-48"	4"	0.138"		0.064"						2½" × 1½" × 3/16"	2½" × 1½" × 3/16"	1-½"				3-½"
		THROUGH 72"	10½"	0.052"-0.168"		0.052"		0.079"	½"	⅞"	32 ksi							
		78"-84"	10½"	0.168"		0.079"		0.109"	½"	⅞"	45 ksi							
	3" × 1" REROLLED END	48"-90"	10½"	0.064"-0.109"		0.052"		0.079"	½"	⅞"	32 ksi							
		96"-120"	10½"	0.079"-0.109"		0.052"		0.109"	½"	⅞"	45 ksi							
	5" × 1" REROLLED END	48"-66"	7½"	0.064"-0.109"		0.064"		0.079"	½"	⅞"	32 ksi	2½" × 1½" × 3/16"	2½" × 1½" × 3/16"	1-½"				3-½"
		72"-90"	7½"	0.064"-0.079"		0.064"		0.079"	½"	⅞"	32 ksi	2½" × 1½" × 3/16"	2½" × 1½" × 3/16"	1-½"				3-½"
		48"-90"	7½"	0.064"-0.138"		0.064"		0.079"	½"	⅞"	32 ksi							
		48"-120"	12" SEE	0.064"-0.109"		0.064"		0.079"	½"	⅞"	32 ksi							
		48"-84"	12" NOTE	0.138"		0.064"		0.079"	½"	⅞"	32 ksi							
		90"-120"	12" 11	0.138"		0.064"		DOUBLE 0.079"	½"	⅞"	32 ksi							

SPIRAL RIB PROFILE

COUPLING TYPE	PIPE CORRUGATION	PIPE SIZE	W	PIPE WALL THICKNESS SSRP	PIPE WALL THICKNESS ASRP	BAND THICKNESS SSRP	BAND THICKNESS ASRP	BAR AND STRAP (SSRP ONLY) STRAP THICKNESS	BOLTS Dia	BAR Dia	BAR YIELD STRENGTH	ANGLE DIMENSIONS SSRP	ANGLE DIMENSIONS ASRP	BOLTS (No.- Dia) SSRP	BOLTS (No.- Dia) ASRP	RIVETS ANGLE TO BAND SSRP	RIVETS ANGLE TO BAND ASRP	SPOT WELDS ANGLE TO BAND SSRP
ANNULAR	2⅔" × ½" * REROLLED END	24"-36"	12"	0.064"-0.109"	0.060"-0.105"	0.052"	0.060"	0.079"	½"	⅞"	32 ksi	2" × 2" × 3/16"	2" × 2" × 3/16"	3-½"	3-½"	3-⅜"	3-⅜"	5-½"
		42"-60"	12"	0.064"-0.109"	0.075"-0.105"	0.052"	0.105"	0.079"	½"	⅞"	32 ksi	2" × 2" × 3/16"	2" × 2" × 3/16"	3-½"	3-½"	3-⅜"	3-⅜"	5-½"
		66"-72"	12"	0.064"-0.109"		0.052"		0.079"	½"	⅞"	32 ksi	2" × 2" × 3/16"	2" × 2" × 3/16"	3-½"	3-½"	3-⅜"	3-⅜"	5-½"
		78"-114"	12"	0.079"-0.109"		0.079"		0.109"	½"	⅞"	45 ksi	2" × 2" × 3/16"	2" × 2" × 3/16"	3-½"	3-½"	3-⅜"	3-⅜"	5-½"
HUGGER	2⅔" × ½" * REROLLED END	24"-72"	10½"	0.064"-0.109"		0.052"		0.079"	½"	⅞"	32 ksi							
		78"-84"	10½"	0.109"		0.079"		0.109"	½"	⅞"	45 ksi							

* See Note 14.

14. All profiles of Spiral Rib Pipe (¾" × ¾" ribs at 7½" pitch and ¾" × 1" ribs at 11½" pitch in both steel and aluminum and ¾" × 1" ribs at 8½" pitch in steel only) shall be manufactured with rerolled ends. Corrugation profile of the rerolled ends shall be 2⅔" × ½" annual corrugations with a minimum of two full corrugations at each end.

NOTES:

To accompany plans dated 01-18-11

1. All ferrous metal coupling band connection hardware shall be galvanized or electro-plated in accordance with the Standard Specifications.
2. For helically corrugated coupling bands, the connection angles may be oriented parallel to the pipe axis, provided connecting holes are slotted lengthwise sufficiently to allow adjustment for the helix angle.
3. Tension strap may be connected to band with either spot welds or fillet welds that develop minimum required strength of strap.
4. Use 1¼" gage line dimension on attached angle leg for rivets and spot welds.
5. Band thickness shall not be less than:
   a. 3 standard thicknesses lighter than the thickness of the pipe for Corrugated Steel Pipe.
   b. 2 standard thicknesses lighter than the thickness of the pipe and in no case lighter than 0.060" for Corrugated Aluminum Pipe.
6. Dimensions, thicknesses and strengths shown are minimum.
7. For pipe arches use same width band as for round pipe of equal periphery.
8. Fillet welds of equivalent strenght may be substituted for spot welds or rivets.
9. Spot welds shall develop minimum required strength of strap.
10. Pipe with rerolled ends having at least two 2⅔" × ½" annular corrugations at each end with or without an upturned flange may be connected with any of the annular coupling bands shown for pipe of the same diameter and wall thickness and having 2⅔" × ½" corrugations.
11. In the case of H-12 huggerbands, two piece bands are required for diameters through 96" and three piece bands are required for diameters 102" through 120".
12. Two piece bands are required for pipes greater than 42" diameter.
13. The 2¼" × 2" × 0.109" thick galvanized die-formed angle connector may be used in lieu of the 2" × 2" × 3/16" angle connector for standard joints only on pipes through 72" diameter.

STATE OF CALIFORNIA
DEPARTMENT OF TRANSPORTATION

CORRUGATED METAL PIPE COUPLING DETAILS No. 5 STANDARD JOINT

NO SCALE

RSP D97E DATED JUNE 6, 2008 SUPERSEDES STANDARD PLAN D97E
DATED MAY 1, 2006 - PAGE 187 OF THE STANDARD PLANS BOOK DATED MAY 2006.

REVISED STANDARD PLAN RSP D97E

2006 REVISED STANDARD PLAN RSP D97E

4-2-08

DIST	COUNTY	ROUTE	POST MILES TOTAL PROJECT	SHEET NO.	TOTAL SHEETS
11	SD	8	R39.7/R61.5	58	71

Raymond Don Tsztoo
REGISTERED CIVIL ENGINEER

June 6, 2008
PLANS APPROVAL DATE

REGISTERED PROFESSIONAL ENGINEER
Raymond Don Tsztoo
No. C37332
Exp. 6-30-08
CIVIL
STATE OF CALIFORNIA

The State of California or its officers or agents shall not be responsible for the accuracy or completeness of electronic copies of this plan sheet.

To accompany plans dated 01-18-11

ANNULAR AND HELICAL PROFILE

COUPLING TYPE	PIPE CORRUGATION	PIPE SIZE	W OR A	PIPE WALL THICKNESS		BAND THICKNESS		BAR AND STRAP (CSP ONLY)			ANGLE						
											DIMENSIONS		BOLTS (No.- Dia)		RIVETS ANGLE TO BAND		SPOT WELDS ANGLE TO BAND
				CSP	CAP	CSP	CAP	STRAP THICKNESS	BOLTS Dia	BAR Dia	CSP	CAP	CSP	CAP	CSP	CAP	CSP
TWO PIECE INTEGRAL FLANGE	1½′ × ¼"	6"	7"	0.064"-0.168"		0.052"							3-⅜"				
	1½′ × ¼"	8"-10"	7"	0.064"-0.168"	0.060"-0.164"	0.064"	0.060"						3-⅜"	3-⅜"			
ANNULAR	2⅔" × ½"	THROUGH 24"	12"	0.064"-0.168"	0.060"-0.164"	0.064"	0.060"				2" × 2" × 3/16"	2" × 2" × 3/16"	3-½"	3-½"	3-⅜"	3-⅜"	3-½"
HUGGER	2⅔" × ½" REROLLED END	THROUGH 24"	10½"	0.064"-0.168"		0.064"		0.079"	½"	⅞"							

SPIRAL RIB PROFILE

COUPLING TYPE	PIPE CORRUGATION	PIPE SIZE	W	PIPE WALL THICKNESS		BAND THICKNESS		BAR AND STRAP (SSRP ONLY)			ANGLE						
											DIMENSIONS		BOLTS (No.- Dia)		RIVETS ANGLE TO BAND		SPOT WELDS ANGLE TO BAND
				SSRP	ASRP	SSRP	ASRP	STRAP THICKNESS	BOLTS Dia	BAR Dia	SSRP	ASRP	SSRP	ASRP	SSRP	ASRP	SSRP
ANNULAR	2⅔" × ½" * REROLLED END	24"	12"	0.064"-0.168"	0.060"-0.164"	0.064"	0.060"				2" × 2" × 3/16"	2" × 2" × 3/16"	3-½"	3-½"	3-⅜"	3-⅜"	3-½"
HUGGER	2⅔" × ½" * REROLLED END	24"	10½"	0.064"-0.168"		0.064"		0.079"	½"	⅞"							

* See Note 12.

12. All profiles of Spiral Rib Pipe (¾" × ¾" ribs at 7½" pitch and ¾" × 1" ribs at 11½" pitch in both steel and aluminum and ¾" × 1" ribs at 8½" pitch in steel only) shall be manufactured with rerolled ends. Corrugation profile of the rerolled ends shall be 2⅔" × ½" annual corrugations with a minimum of two full corrugations at each end.

NOTES:

1. All ferrous metal coupling band connection hardware shall be galvanized or electro-plated in accordance with the Standard Specifications.
2. For helically corrugated coupling bands, the connection angles may be oriented parallel to the pipe axis, provided connecting holes are slotted lengthwise sufficiently to allow adjustment for the helix angle.
3. Tension strap may be connected to band with either spot welds or fillet welds that develop minimum required strength of strap.
4. Use 1¼" gage line dimension on attached angle leg for rivets and spot welds.
5. Band thickness shall not be less than:
   a. 3 standard thicknesses lighter than the thickness of the pipe for Corrugated Steel Pipe.
   b. 2 standard thicknesses lighter than the thickness of the pipe and in no case lighter than 0.060" for Corrugated Aluminum Pipe.
6. Dimensions, thicknesses and strengths shown are minimum.
7. For pipe arches use same width band as for round pipe of equal periphery.
8. Fillet welds of equivalent strenght may be substituted for spot welds or rivets.
9. Spot welds shall develop minimum required strength of strap.
10. Pipe with rerolled ends having at least two 2⅔" × ½" annular corrugations at each end with or without an upturned flange may be connected with any of the annular coupling bands shown for pipe of the same diameter and wall thickness and having 2⅔" × ½" corrugations.
11. For downdrain applications, two piece integral flange couplers shall have factory applied sleeve type rubber gaskets with a minimum length of 7" measured along the length of the pipe.

STATE OF CALIFORNIA
DEPARTMENT OF TRANSPORTATION

CORRUGATED METAL PIPE COUPLING DETAILS No. 7 DOWNDRAIN

NO SCALE

RSP D97G DATED JUNE 6, 2008 SUPERSEDES STANDARD PLAN D97G
DATED MAY 1, 2006 - PAGE 189 OF THE STANDARD PLANS BOOK DATED MAY 2006.

REVISED STANDARD PLAN RSP D97G

2006 REVISED STANDARD PLAN RSP D97G

4-4-08

DIST	COUNTY	ROUTE	POST MILES TOTAL PROJECT	SHEET NO.	TOTAL SHEETS
11	SD	8	R39.7/R61.5	59	71

William K. Farnbach
REGISTERED CIVIL ENGINEER

May 15, 2009
PLANS APPROVAL DATE

REGISTERED PROFESSIONAL ENGINEER William K. Farnbach No. C49042 Exp. 9-30-10 CIVIL STATE OF CALIFORNIA

The State of California or its officers or agents shall not be responsible for the accuracy or completeness of electronic copies of this plan sheet.

To accompany plans dated 01-18-11

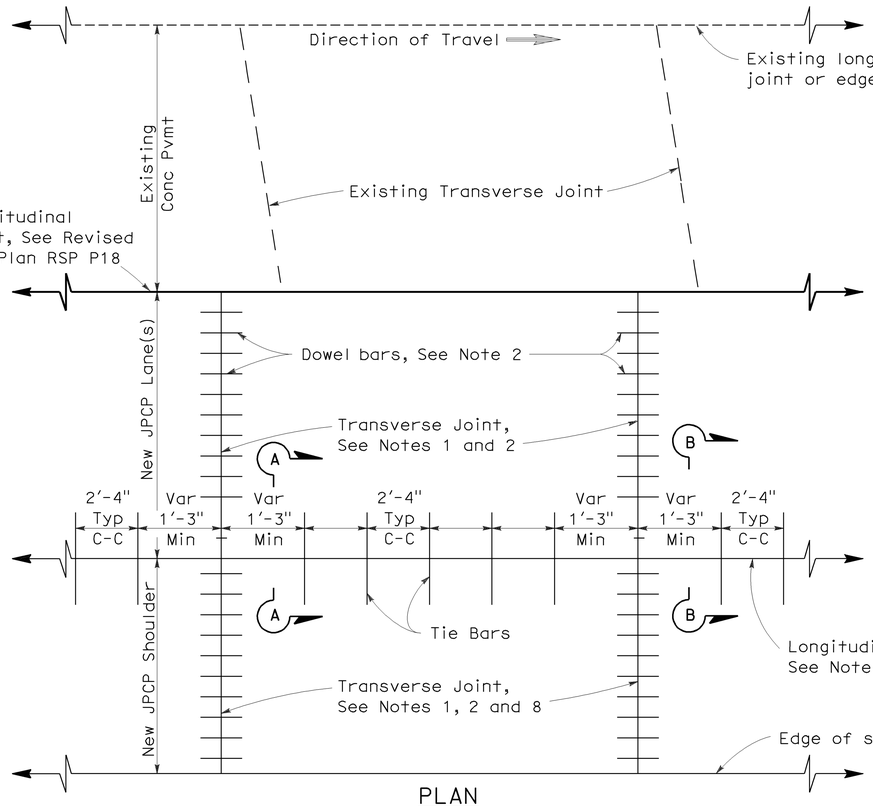

PLAN
LANE/SHOULDER ADDITION OR RECONSTRUCTION
See Notes 6 and 7

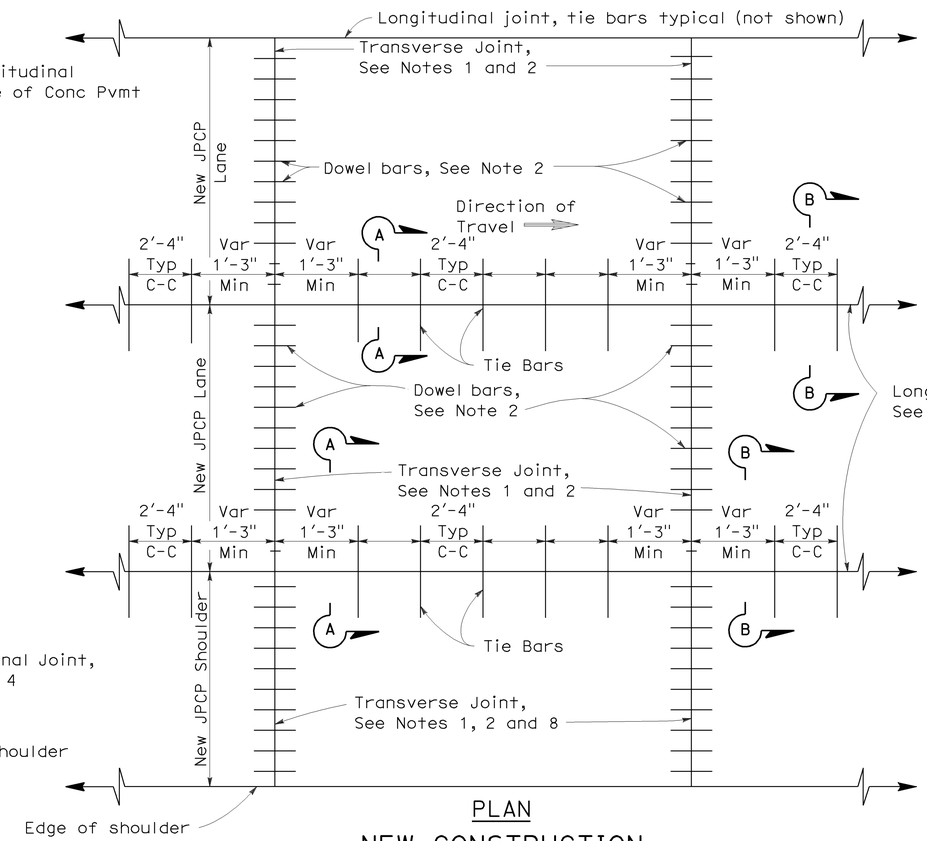

PLAN
NEW CONSTRUCTION
See Notes 6 and 7

NOTES:

1. Transverse joints shall be constructed at right angles to the longitudinal pavement joints in new jointed plain concrete pavement and spaced at successive repeated intervals of 12', 15', 13' and 14'.
2. For transverse joint and dowel bar details not shown, See Revised Standard Plan RSP P10.
3. Construct longitudinal contraction joints as shown in Section A-A when more than one lane or shoulder widths are placed at one time. If constructing one lane at a time, use longitudinal construction joint, as shown in Section B-B.
4. For additional longitudinal joint details, see Revised Standard Plan RSP P18.
5. If fresh concrete is placed adjacent to existing concrete, the top corner of the new hardened concrete does not need to be rounded to the 1/4" radius as shown.
6. Joint spacing patterns do not apply to intersections.
7. Details can also apply to inside widening.
8. Dowel bars may be omitted from shoulders when the shoulder cross slope is not the same as the adjacent traffic lane.

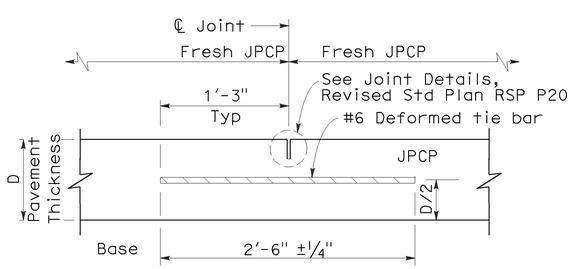

SECTION A-A
LONGITUDINAL CONTRACTION JOINT

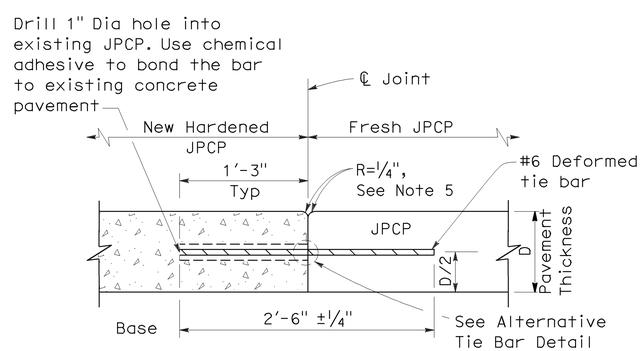

SECTION B-B
LONGITUDINAL CONSTRUCTION JOINT

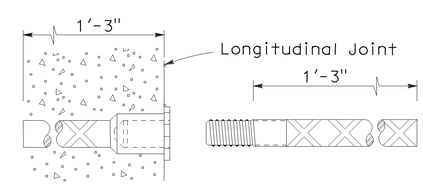

ALTERNATIVE TIE BAR SPLICE DETAIL
(Splice Coupler)

TIE BAR DETAILS

STATE OF CALIFORNIA
DEPARTMENT OF TRANSPORTATION

JOINTED PLAIN CONCRETE PAVEMENT

NO SCALE

RSP P1 DATED MAY 15, 2009 SUPERSEDES STANDARD PLAN P1
DATED MAY 1, 2006 - PAGE 119 OF THE STANDARD PLANS BOOK DATED MAY 2006.

REVISED STANDARD PLAN RSP P1

2006 REVISED STANDARD PLAN RSP P1

5-8-09

DIST	COUNTY	ROUTE	POST MILES TOTAL PROJECT	SHEET NO.	TOTAL SHEETS
11	SD	8	R39.7/R61.5	60	71

William K. Farnbach
REGISTERED CIVIL ENGINEER

May 15, 2009
PLANS APPROVAL DATE

REGISTERED PROFESSIONAL ENGINEER William K. Farnbach No. C49042 Exp. 9-30-10 CIVIL STATE OF CALIFORNIA

The State of California or its officers or agents shall not be responsible for the accuracy or completeness of electronic copies of this plan sheet.

To accompany plans dated 01-18-11

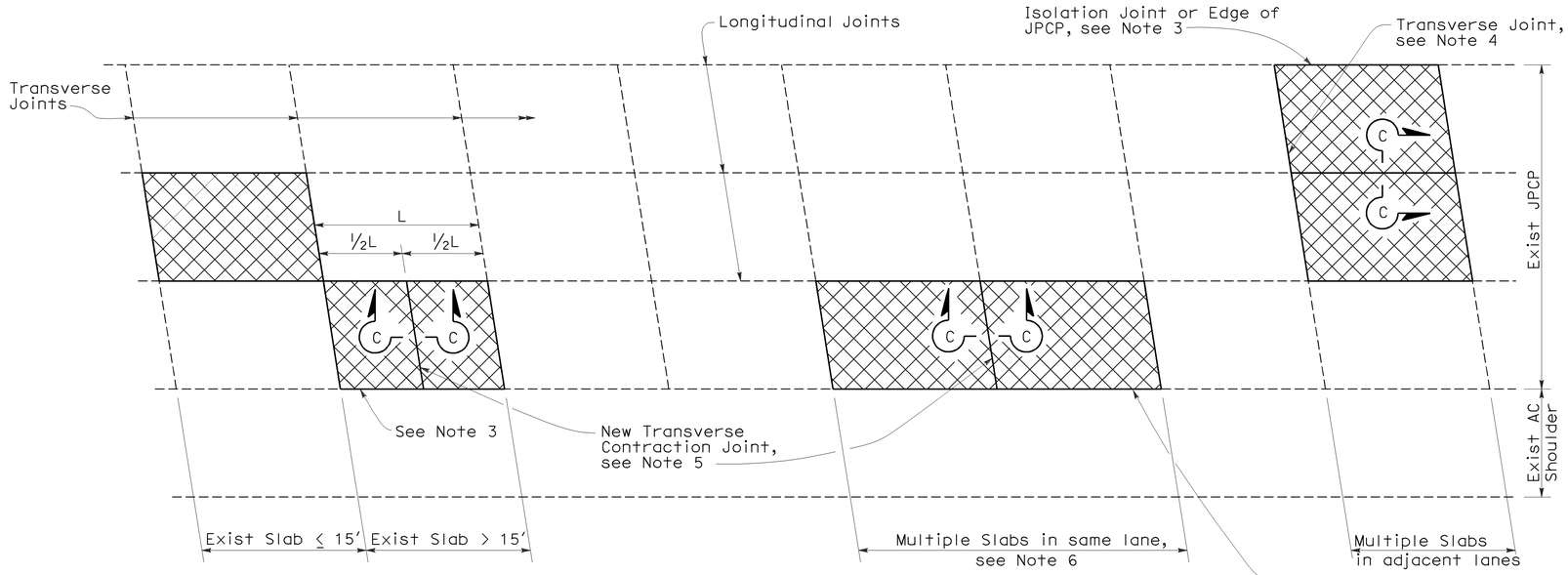

PLAN

NOTES:

1. For details not shown, see Revised Standard Plan RSP P10.
2. Where the existing outer shoulder pavement is asphalt concrete pavement, the "a" dimension shall be 1′-0" and the "b" dimension shall be 2′-0".
3. Side forms shall be used where edge of pavement is adjacent to asphalt concrete.
4. For detail, see Transverse Construction Joint for existing concrete pavement detail on Revised Standard Plan RSP P10.
5. Transverse joint to match skew of existing joint. Omit dowel bars.
6. This Standard Plan only applicable when replacing multiple slabs in the same lane is less than 100′.

LEGEND

Replace Concrete Pavement (See Slab Layout Detail)

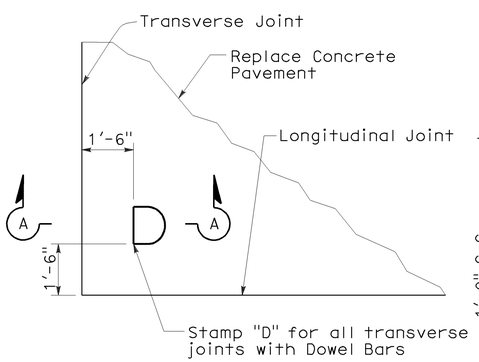

DOWEL STAMP DETAIL

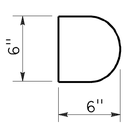

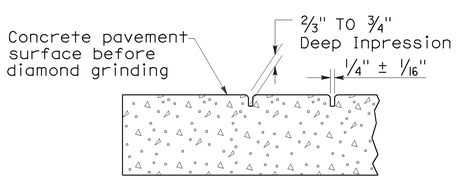

SECTION A-A

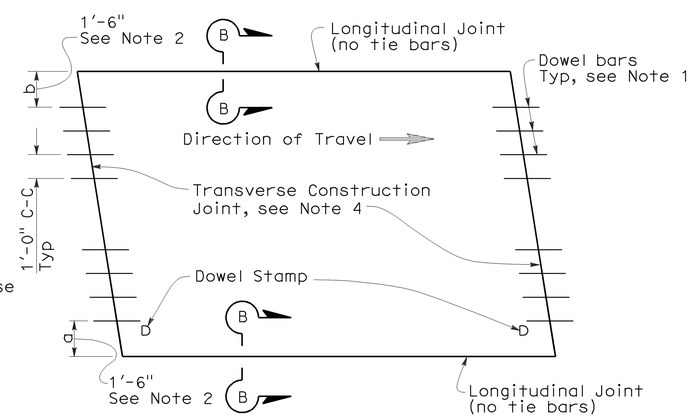

TYPE I
(traffic lane lines match longitudinal joints)

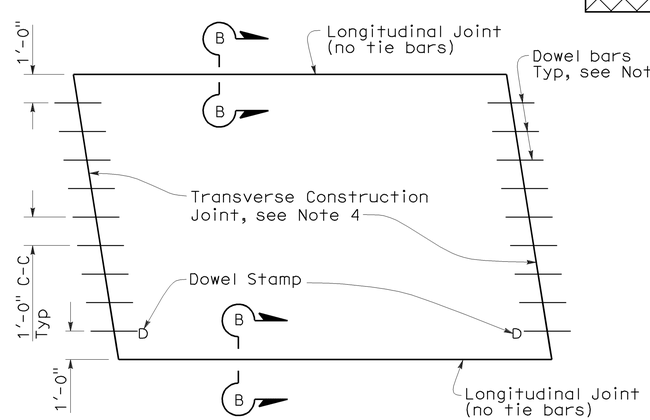

TYPE II
(traffic lane lines do not match longitudinal joints)

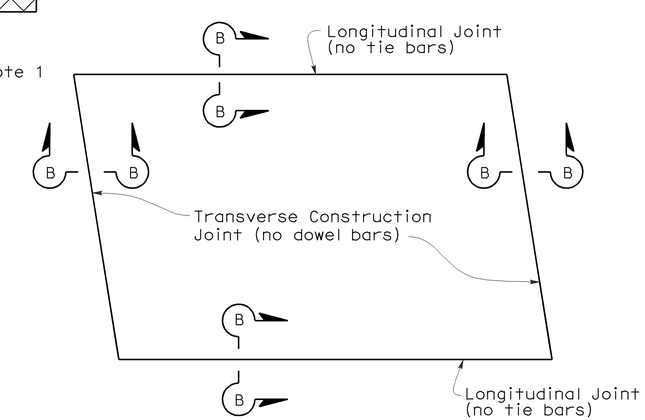

TYPE III
(for short term repairs < 5 yrs design life or for slab replacements with a cracking and seating operation)

SLAB LAYOUT

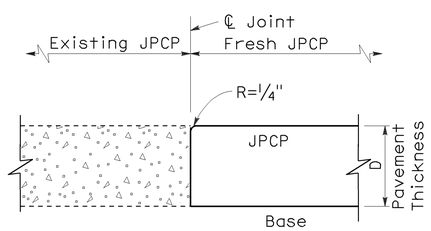

SECTION B-B

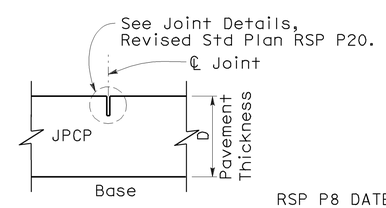

SECTION C-C

STATE OF CALIFORNIA
DEPARTMENT OF TRANSPORTATION

JOINTED PLAIN CONCRETE PAVEMENT-INDIVIDUAL SLAB REPLACEMENT

NO SCALE

RSP P8 DATED MAY 15, 2009 SUPERSEDES RSP P8 DATED SEPTEMBER 1, 2006 AND STANDARD PLAN P8 DATED MAY 1, 2006 - PAGE 123 OF THE STANDARD PLANS BOOK DATED MAY 2006.

REVISED STANDARD PLAN RSP P8

2006 REVISED STANDARD PLAN RSP P8

5-8-09

DIST	COUNTY	ROUTE	POST MILES TOTAL PROJECT	SHEET NO.	TOTAL SHEETS
11	SD	8	R39.7/R61.5	61	71

William K. Farnbach
REGISTERED CIVIL ENGINEER

May 15, 2009
PLANS APPROVAL DATE

REGISTERED PROFESSIONAL ENGINEER William K. Farnbach No. C49042 Exp. 9-30-10 CIVIL STATE OF CALIFORNIA

The State of California or its officers or agents shall not be responsible for the accuracy or completeness of electronic copies of this plan sheet.

To accompany plans dated 01-18-11

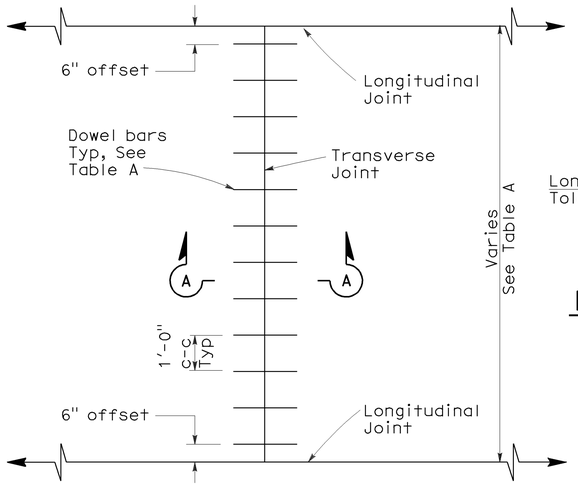

TRANSVERSE JOINT DOWEL BAR LAYOUT

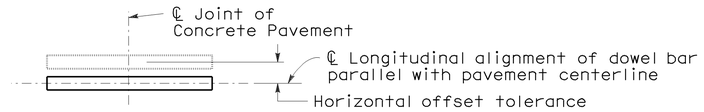

PLAN

HORIZONTAL OFFSET TOLERANCE

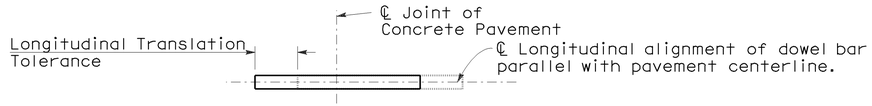

PLAN

LONGITUDINAL TRANSLATION TOLERANCE

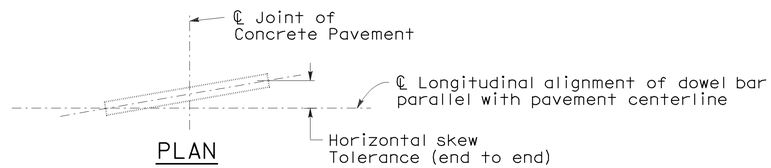

PLAN

HORIZONTAL SKEW TOLERANCE

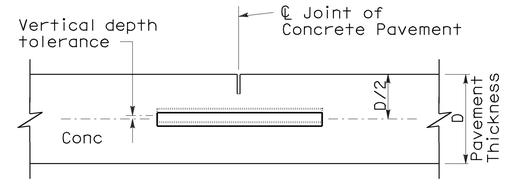

ELEVATION

VERTICAL DEPTH TOLERANCE

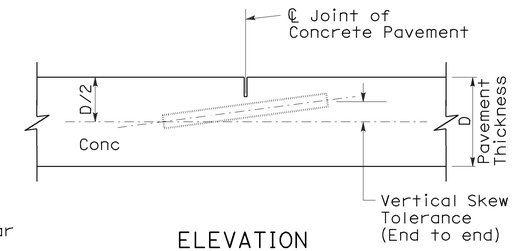

ELEVATION

VERTICAL SKEW TOLERANCE

NOTES:

1. See Revised Standard Plan RSP P1 for typical dowel bar placement and locations.
2. 1½" Dia smooth dowel bars are to be used with a pavement thickness, D, equal to or greater than 0.70 feet. For pavement thickness, D, less than 0.70 feet, use 1¼" Dia smooth dowel bars.
3. For widths not shown, see Project Plans.
4. If fresh concrete pavement is placed adjacent to existing concrete pavement, the top corner of the existing concrete pavement does not need to be rounded to the ¼" radius, as shown.

TABLE A (See Note 3)

Dowel Bar Transverse Spacing Table	
Width between Longitudinal Joints	Number of Dowels between Longitudinal Joints
14'-0"	14
13'-0"	13
12'-0"	12
11'-0"	11
10'-0"	10
8'-0"	8
5'-0"	5
4'-0"	4

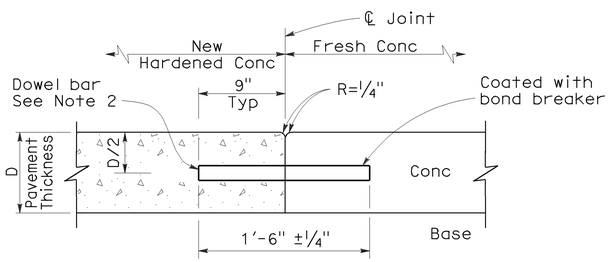

SECTION A-A

TRANSVERSE CONSTRUCTION JOINT DETAIL

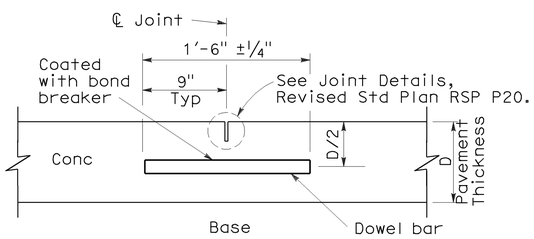

TRANSVERSE CONTRACTION JOINT

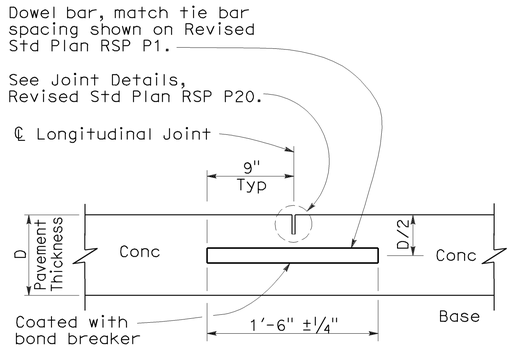

LONGITUDINAL CONTRACTION JOINT WITH DOWEL BARS

(See Revised Std Plan RSP P18)

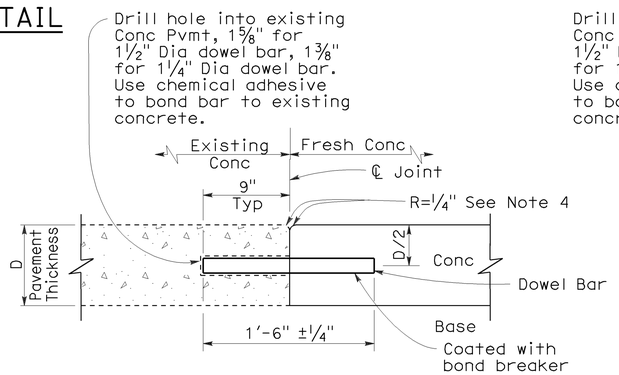

TRANSVERSE CONSTRUCTION JOINT FOR EXISTING CONCRETE PAVEMENT

(Drill and bond locations)

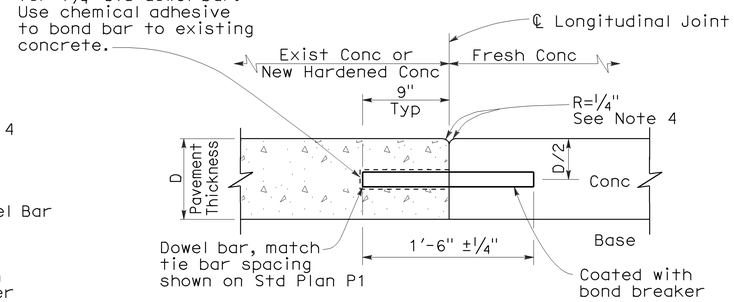

LONGITUDINAL CONSTRUCTION JOINT WITH DOWEL BARS

(See Revised Std Plan RSP P18)

STATE OF CALIFORNIA
DEPARTMENT OF TRANSPORTATION

CONCRETE PAVEMENT-DOWEL BAR DETAILS

NO SCALE

RSP P10 DATED MAY 15, 2009 SUPERSEDES STANDARD PLAN P10 DATED MAY 1, 2006 - PAGE 124 OF THE STANDARD PLANS BOOK DATED MAY 2006.

REVISED STANDARD PLAN RSP P10

2006 REVISED STANDARD PLAN RSP P10

5-8-09

DIST	COUNTY	ROUTE	POST MILES TOTAL PROJECT	SHEET NO.	TOTAL SHEETS
11	SD	8	R39.7/R61.5	62	71

William K. Farnbach
REGISTERED CIVIL ENGINEER

May 15, 2009
PLANS APPROVAL DATE

REGISTERED PROFESSIONAL ENGINEER
William K. Farnbach
No. C49042
Exp. 9-30-10
CIVIL
STATE OF CALIFORNIA

The State of California or its officers or agents shall not be responsible for the accuracy or completeness of electronic copies of this plan sheet.

To accompany plans dated 01-18-11

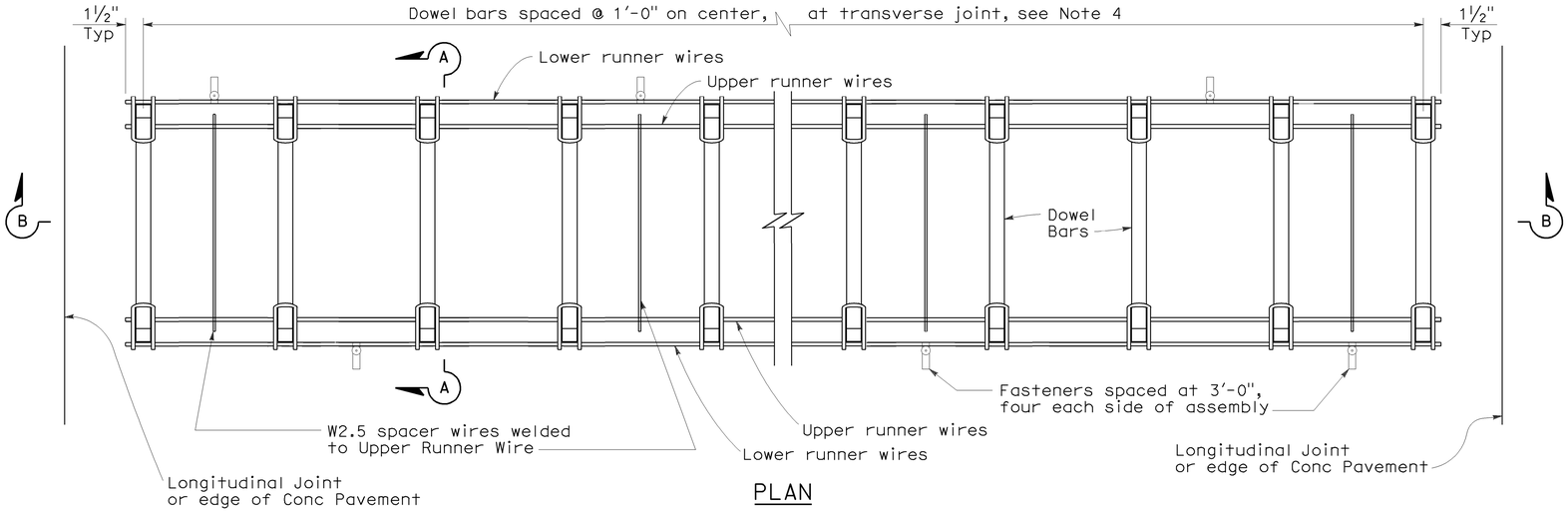

PLAN
DOWEL BAR BASKET (TRANSVERSE JOINT)
See Note 1

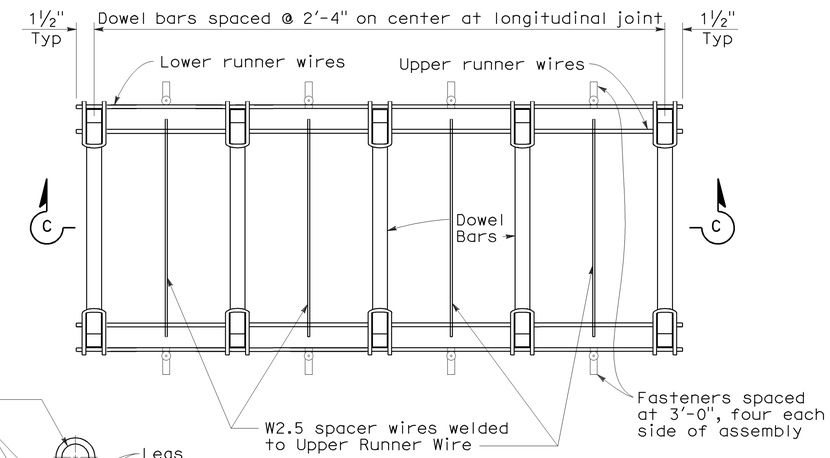

PLAN
DOWEL BAR BASKET (LONGITUDINAL JOINT)
See Note 1

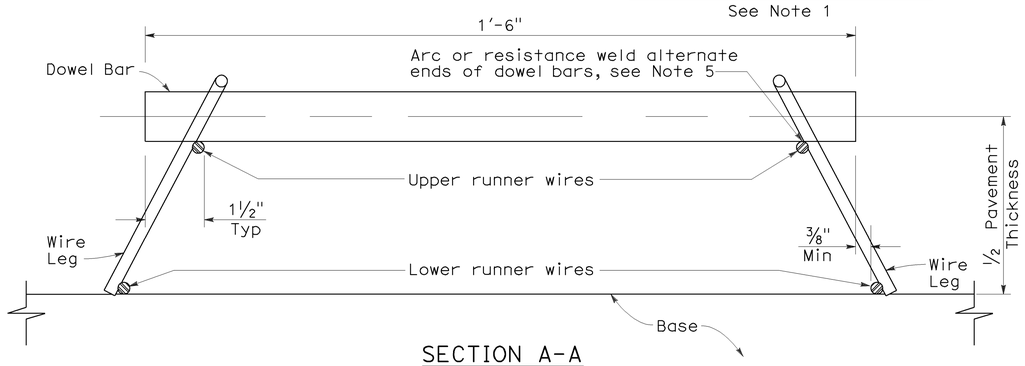

SECTION A-A

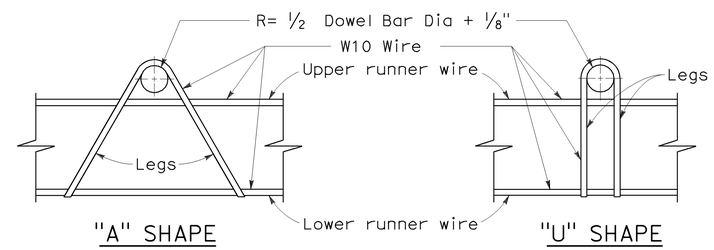

"A" SHAPE "U" SHAPE

ASSEMBLY FRAME DETAILS

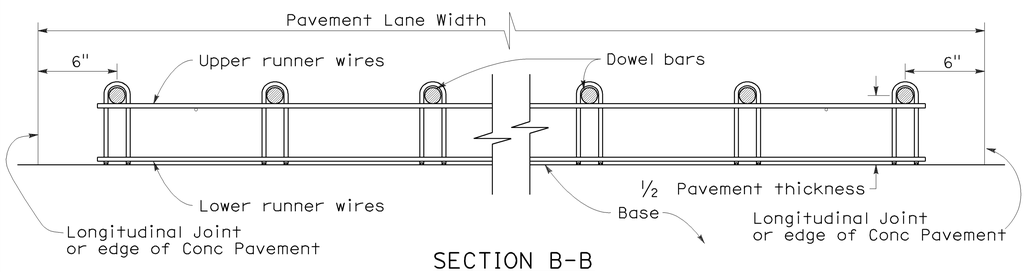

SECTION B-B
See Note 1

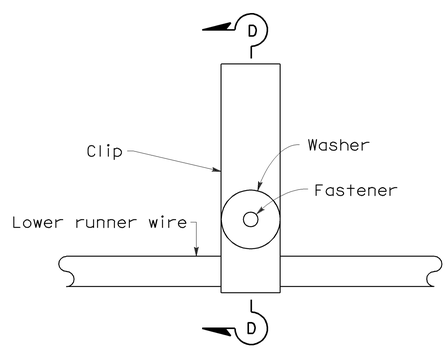

PLAN

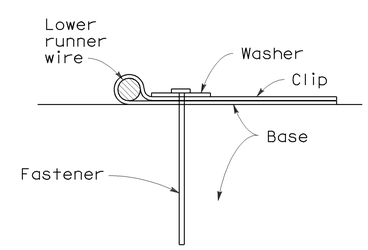

SECTION D-D

FASTENER DETAIL

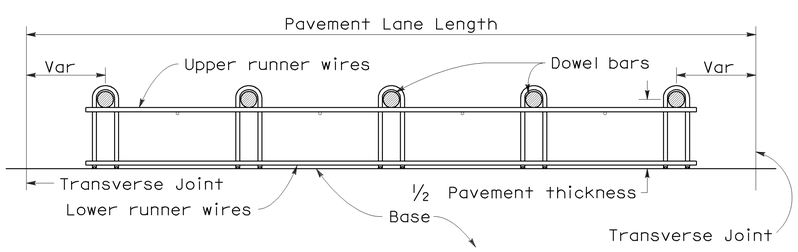

SECTION C-C
See Notes 1 and 4

NOTES:

1. "U" frame shape assembly shown. "U" frame shape or "A" frame shape are acceptable.
2. Wire sizes shown are minimum required.
3. All wire intersections are to be resistance welded.
4. Use tie bar spacing for longitudinal dowel bar locations. See Revised Std Plans RSPs P1, P2, and P3 for tie bar requirements.
5. Weld may be at top or bottom of dowel bar.

STATE OF CALIFORNIA
DEPARTMENT OF TRANSPORTATION

CONCRETE PAVEMENT-DOWEL BAR BASKET DETAILS

NO SCALE

RSP P12 DATED MAY 15, 2009 SUPERSEDES RSP P12 DATED NOVEMBER 17, 2006 AND STANDARD PLAN P12 DATED MAY 1, 2006 - PAGE 125 OF THE STANDARD PLANS BOOK DATED MAY 2006.

REVISED STANDARD PLAN RSP P12

2006 REVISED STANDARD PLAN RSP P12

5-8-09

DIST	COUNTY	ROUTE	POST MILES TOTAL PROJECT	SHEET NO.	TOTAL SHEETS
11	SD	8	R39.7/R61.5	63	71

William K. Farnbach
REGISTERED CIVIL ENGINEER

May 15, 2009
PLANS APPROVAL DATE

REGISTERED PROFESSIONAL ENGINEER
William K. Farnbach
No. C49042
Exp. 9-30-10
CIVIL
STATE OF CALIFORNIA

The State of California or its officers or agents shall not be responsible for the accuracy or completeness of electronic copies of this plan sheet.

To accompany plans dated 01-18-11

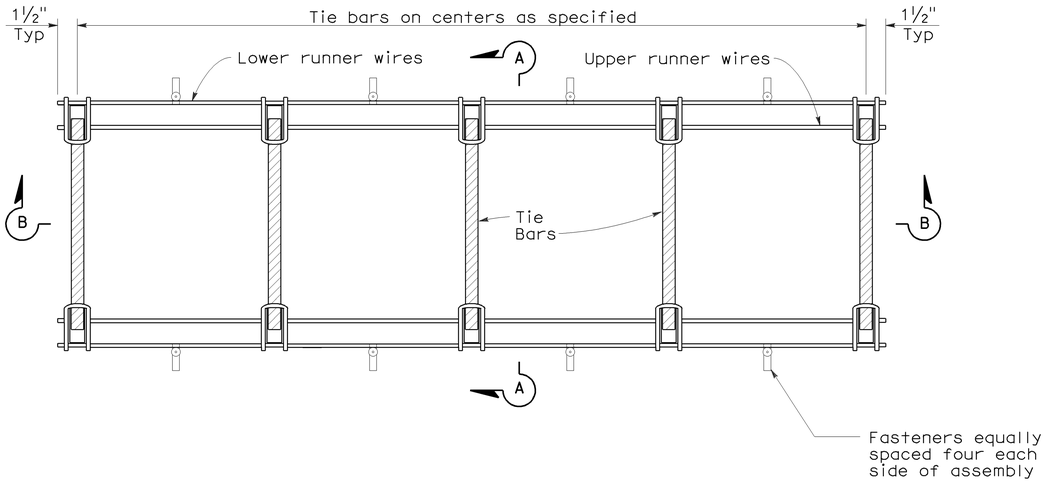

PLAN

TIE BAR BASKET

(TIE BARS AT LONGITUDINAL JOINT)
See Note 1

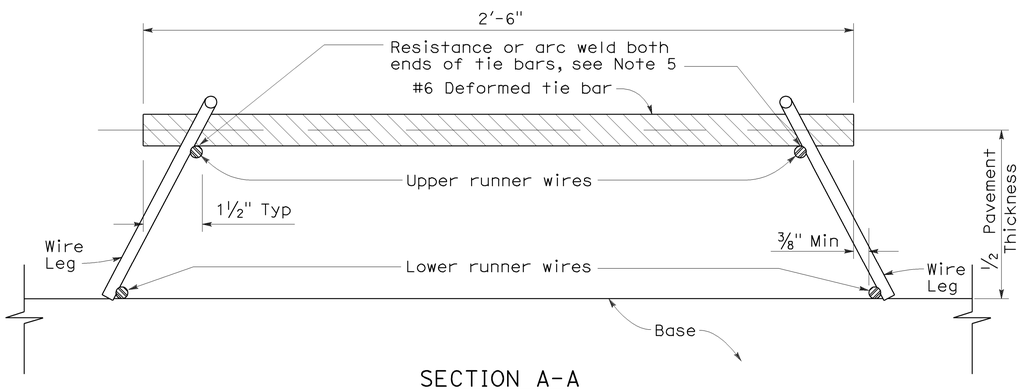

SECTION A-A

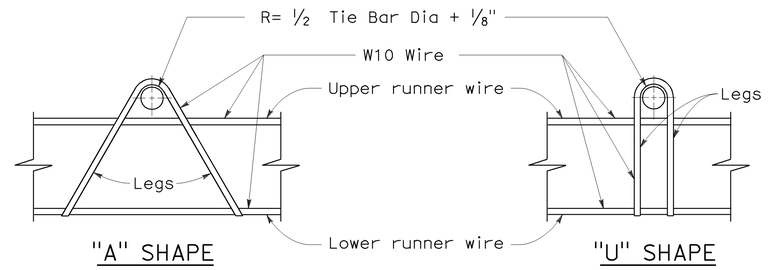

"A" SHAPE "U" SHAPE

ASSEMBLY FRAME DETAILS

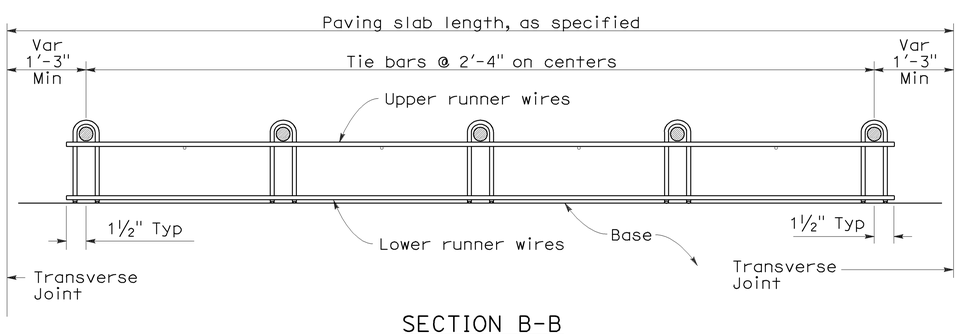

SECTION B-B
See Note 1

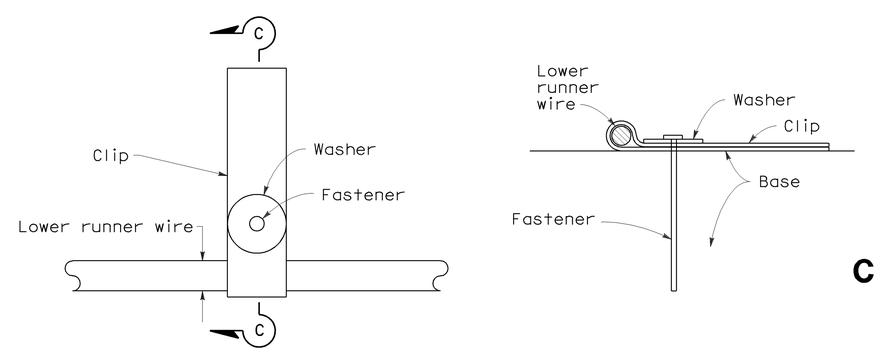

PLAN SECTION C-C

FASTENER DETAIL

NOTES:

1. "U" frame shape assembly shown. "U" frame shape or "A" frame shape are acceptable.
2. Wire sizes shown are minimum required.
3. All wire intersections are to be resistance welded.
4. Not for use on nondoweled skewed jointed plain concrete pavement.
5. Weld may be at top or bottom of tie bar.

STATE OF CALIFORNIA
DEPARTMENT OF TRANSPORTATION

CONCRETE PAVEMENT-TIE BAR BASKET DETAILS

NO SCALE

RSP P17 DATED MAY 15, 2009 SUPERSEDES RSP P17 DATED NOVEMBER 17, 2006 AND STANDARD PLAN P17 DATED MAY 1, 2006 - PAGE 126 OF THE STANDARD PLANS BOOK DATED MAY 2006.

REVISED STANDARD PLAN RSP P17

2006 REVISED STANDARD PLAN RSP P17

5-8-09

NOTE:

1. Tie bars, dowel bars, and reinforcement are not shown in joint seal details, see Revised Standard Plans RSP P1, RSP P3, RSP P10, RSP P35, RSP P45, or RSP P46 as applicable.

DIST	COUNTY	ROUTE	POST MILES TOTAL PROJECT	SHEET NO.	TOTAL SHEETS
11	SD	8	R39.7/R61.5	64	71

William K. Farnbach
REGISTERED CIVIL ENGINEER

May 15, 2009
PLANS APPROVAL DATE

REGISTERED PROFESSIONAL ENGINEER William K. Farnbach No. C49042 Exp. 9-30-10 CIVIL STATE OF CALIFORNIA

The State of California or its officers or agents shall not be responsible for the accuracy or completeness of electronic copies of this plan sheet.

To accompany plans dated 01-18-11

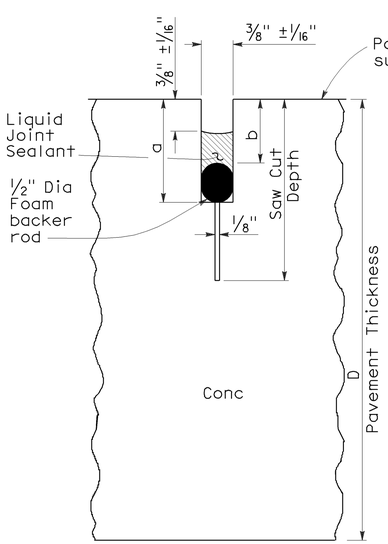

LIQUID SEALANT

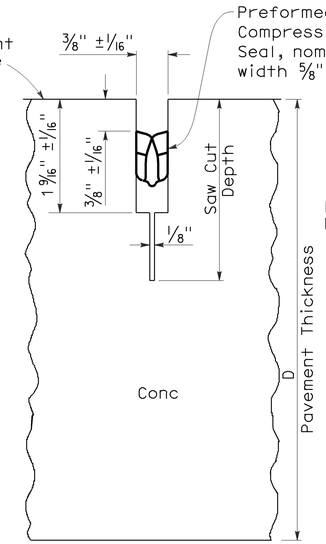

COMPRESSION SEAL

TYPE A1

Transverse Contraction Joints

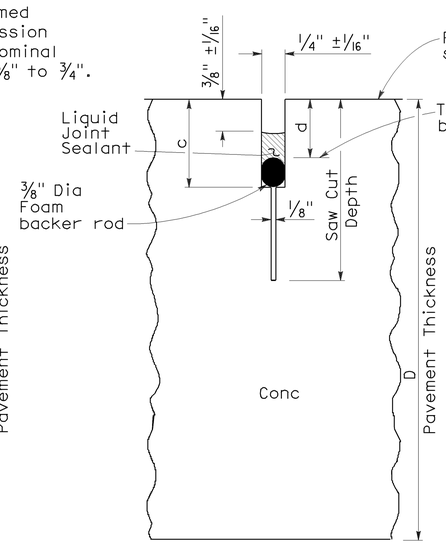

LIQUID SEALANT

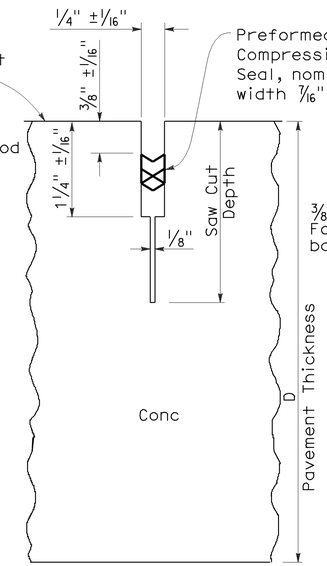

COMPRESSION SEAL

TYPE A2

Longitudinal Contraction Joints

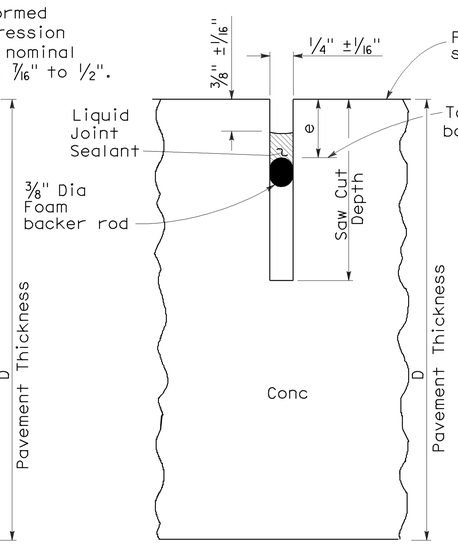

LIQUID SEALANT

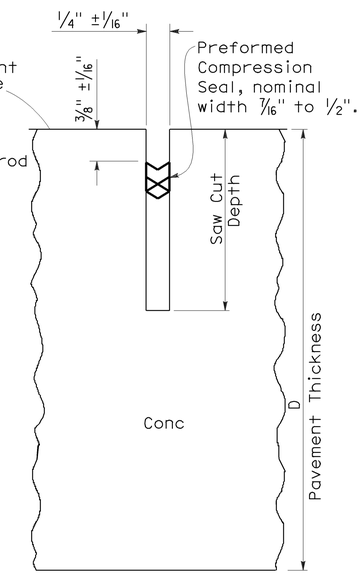

COMPRESSION SEAL

TYPE B

Longitudinal or Transverse Contraction Joint

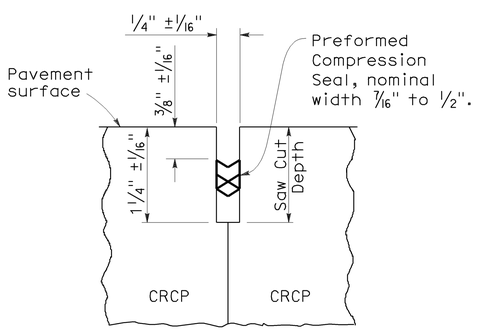

COMPRESSION SEAL

TYPE C

Transverse and Longitudinal Construction Joints (For CRCP)

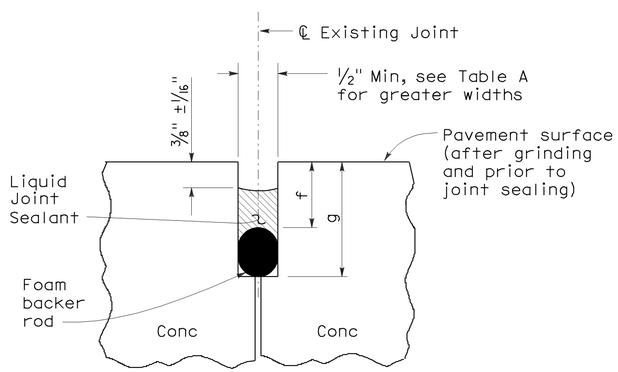

LIQUID SEALANT

TYPE R

Retrofit Transverse and Longitudinal Joints

LIQUID SEALANT RESERVOIR DEPTH

LIQUID SEALANT MATERIAL	3/8" Joint Width Type A1		1/4" Joint Width Type A2		1/4" Joint Width Type B
	DIMENSION		DIMENSION		DIMENSION
	a	b	c	d	e
SILCONE	1" ±1/16"	5/8" ±1/16"	15/16" ±1/16"	9/16" ±1/16"	9/16" ±1/16"
ASPHALT RUBBER	1 3/16" ±1/16"	3/4" ±1/16"	1 1/16" ±1/16"	11/16" ±1/16"	11/16" ±1/16"

TABLE A (TYPE R JOINT)

Sawn Joint Width	Backer Rod Diameter ± 1/16"	DIMENSION "f"	DIMENSION "g"
1"	1 5/16"	7/8"	2 1/4"
7/8"	1 3/16"	13/16"	2"
3/4"	1"	3/4"	1 3/4"
5/8"	7/8"	11/16"	1 1/2"
1/2"	11/16"	5/8"	1 1/4"

STATE OF CALIFORNIA
DEPARTMENT OF TRANSPORTATION

CONCRETE PAVEMENT-JOINT DETAILS

NO SCALE

RSP P20 DATED MAY 15, 2009 SUPERSEDES STANDARD PLAN P20
DATED MAY 1, 2006 - PAGE 128 OF THE STANDARD PLANS BOOK DATED MAY 2006.

REVISED STANDARD PLAN RSP P20

2006 REVISED STANDARD PLAN RSP P20

5-8-09

DIST	COUNTY	ROUTE	POST MILES TOTAL PROJECT	SHEET NO.	TOTAL SHEETS
11	SD	8	R39.7/R61.5	65	71

William K. Farnbach
REGISTERED CIVIL ENGINEER

May 15, 2009
PLANS APPROVAL DATE

REGISTERED PROFESSIONAL ENGINEER
William K. Farnbach
No. C49042
Exp. 9-30-10
CIVIL
STATE OF CALIFORNIA

The State of California or its officers or agents shall not be responsible for the accuracy or completeness of electronic copies of this plan sheet.

To accompany plans dated 01-18-11

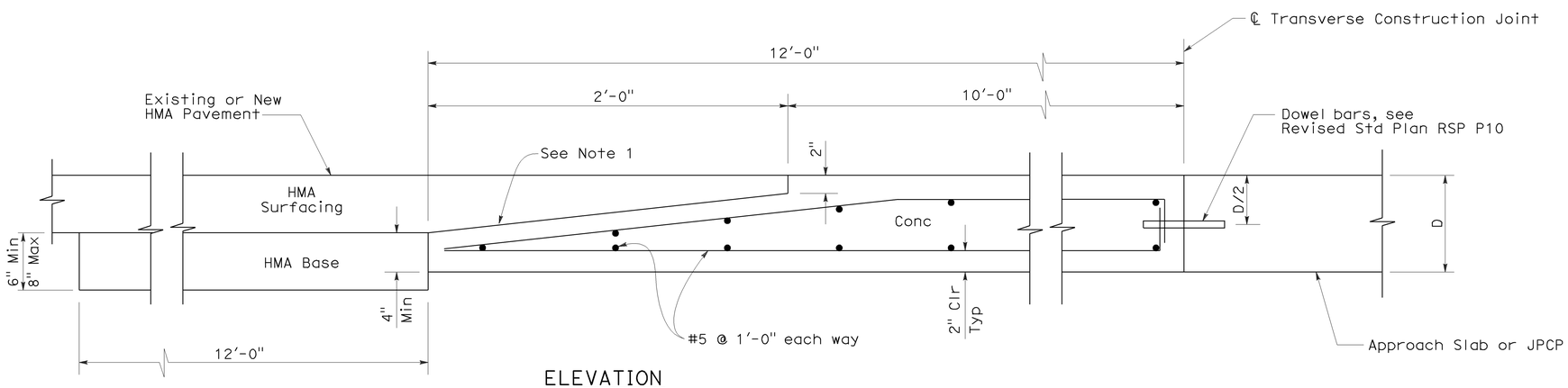

ELEVATION

CONCRETE PAVEMENT TO HOT MIXED ASPHALT PAVEMENT TRANSITION PANEL

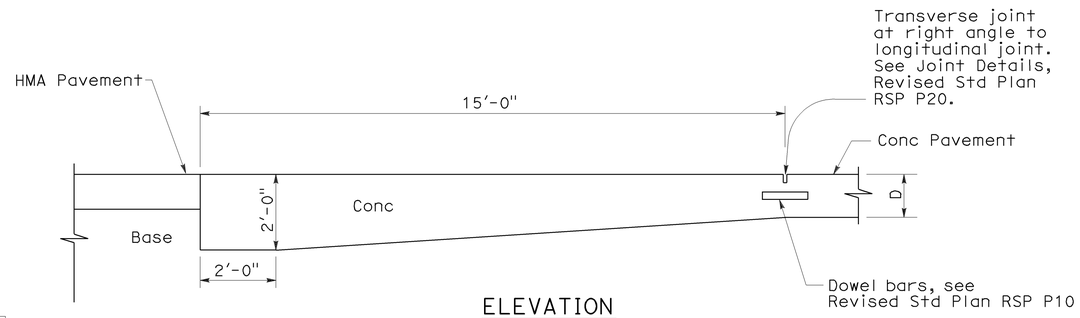

ELEVATION

PAVEMENT END ANCHOR

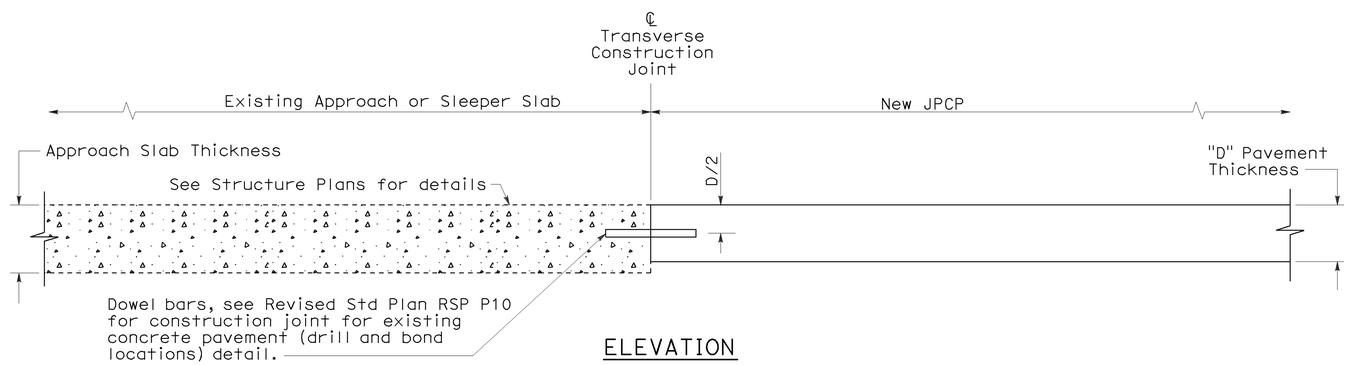

ELEVATION

NOTE:

1. Heavy broom finish.

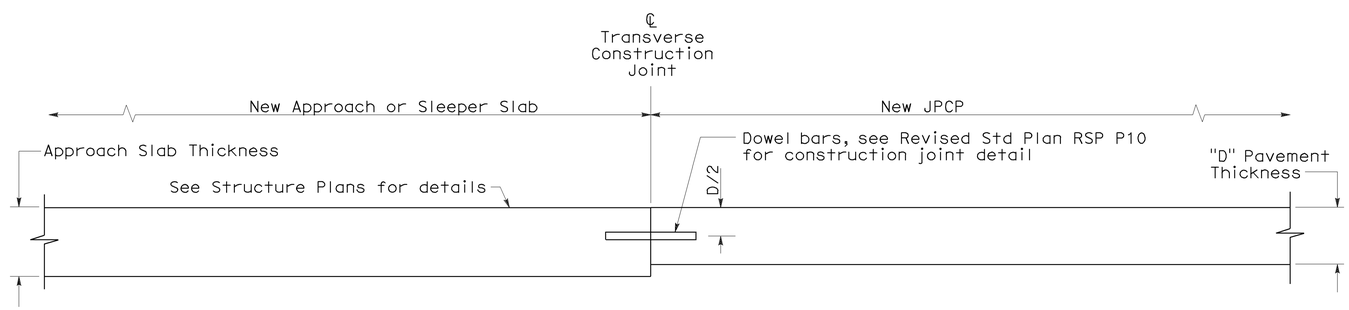

ELEVATION

CONCRETE PAVEMENT TRANSITION TO APPROACH OR SLEEPER SLAB

STATE OF CALIFORNIA
DEPARTMENT OF TRANSPORTATION

JOINTED PLAIN CONCRETE PAVEMENT-END PANEL PAVEMENT TRANSITIONS

NO SCALE

RSP P30 DATED MAY 15, 2009 SUPERSEDES STANDARD PLAN P30
DATED MAY 1, 2006 - PAGE 129 OF THE STANDARD PLANS BOOK DATED MAY 2006.

REVISED STANDARD PLAN RSP P30

2006 REVISED STANDARD PLAN RSP P30

5-8-09

DIST	COUNTY	ROUTE	POST MILES TOTAL PROJECT	SHEET NO.	TOTAL SHEETS
11	SD	8	R39.7/R61.5	66	71

Randell D. Hiatt
REGISTERED CIVIL ENGINEER

June 6, 2008
PLANS APPROVAL DATE

REGISTERED PROFESSIONAL ENGINEER
Randell D. Hiatt
No. C50200
Exp. 6-30-09
CIVIL
STATE OF CALIFORNIA

The State of California or its officers or agents shall not be responsible for the accuracy or completeness of electronic copies of this plan sheet.

To accompany plans dated 01-18-11

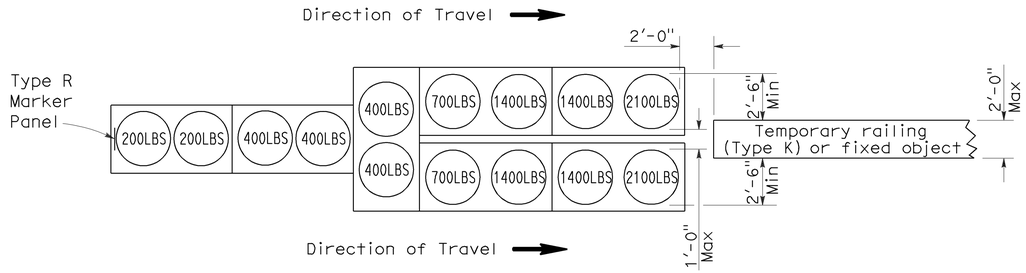

ARRAY 'TU14'

Approach speed 45 mph or more

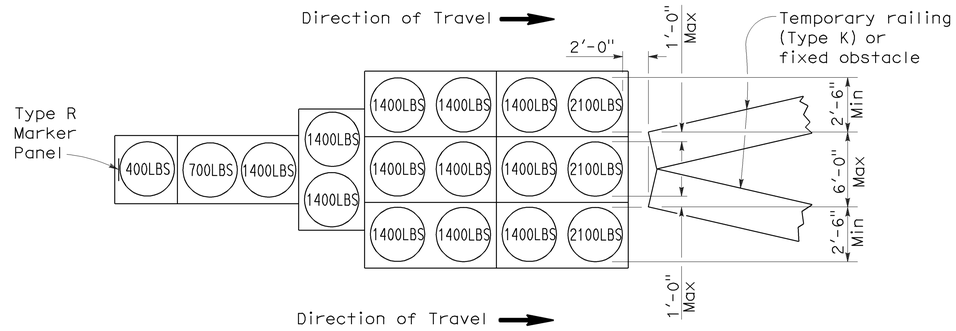

ARRAY 'TU17'

Approach speed less than 45 mph

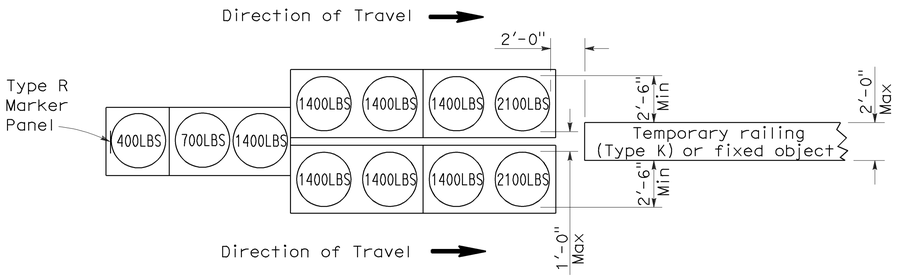

ARRAY 'TU11'

Approach speed less than 45 mph

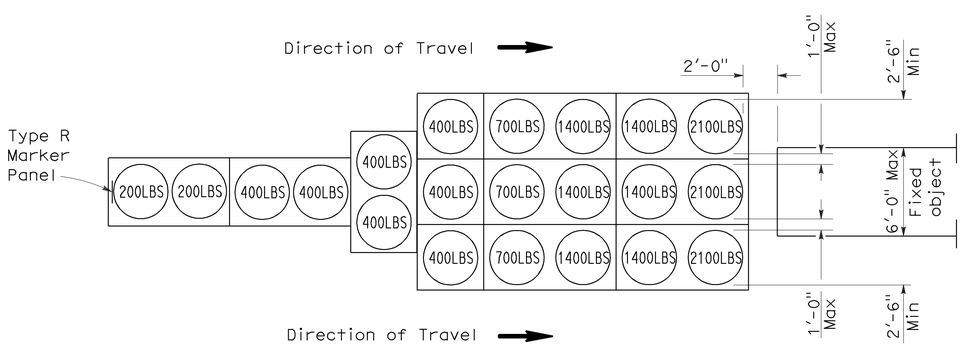

ARRAY 'TU21'

Approach speed 45 mph or more

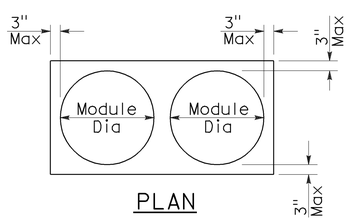

PLAN

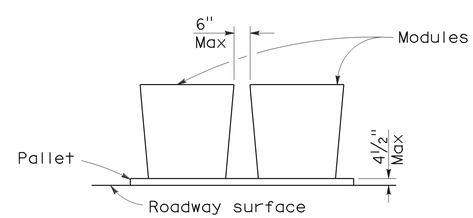

ELEVATION

CRASH CUSHION PALLET DETAIL

See Note 7

NOTES:

1. (XXX) Indicates sand filled module location and weight of sand in pounds for each module. Module spacing is based on the greater diameter of the module.
2. All sand weights are nominal.
3. Temporary crash cushion arrays shall not encroach on the traveled way.
4. Place the top of Type R marker panel 1" below the module lid.
5. Refer to Standard Plan A73B for marker details.
6. Approach speeds indicated conform to NCHRP 350 Report criteria.
7. Use of pallets is optional.

STATE OF CALIFORNIA
DEPARTMENT OF TRANSPORTATION

TEMPORARY CRASH CUSHION, SAND FILLED (UNIDIRECTIONAL)

NO SCALE

RSP T1A DATED JUNE 6, 2008 SUPERSEDES STANDARD PLAN T1A
DATED MAY 1, 2006 - PAGE 211 OF THE STANDARD PLANS BOOK DATED MAY 2006.

REVISED STANDARD PLAN RSP T1A

2006 REVISED STANDARD PLAN RSP T1A

DIST	COUNTY	ROUTE	POST MILES TOTAL PROJECT	SHEET NO.	TOTAL SHEETS
11	SD	8	R39.7/R61.5	67	71

Randell D. Hiatt
REGISTERED CIVIL ENGINEER

June 6, 2008
PLANS APPROVAL DATE

REGISTERED PROFESSIONAL ENGINEER
Randell D. Hiatt
No. C50200
Exp. 6-30-09
CIVIL
STATE OF CALIFORNIA

The State of California or its officers or agents shall not be responsible for the accuracy or completeness of electronic copies of this plan sheet.

To accompany plans dated 01-18-11

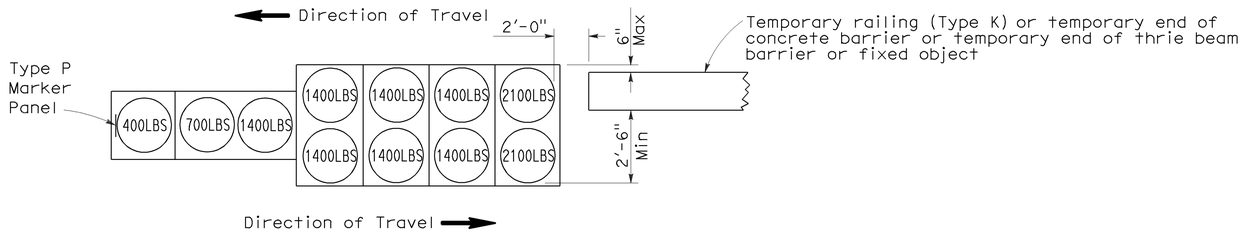

ARRAY 'TB11'

Approach speed less than 45 mph

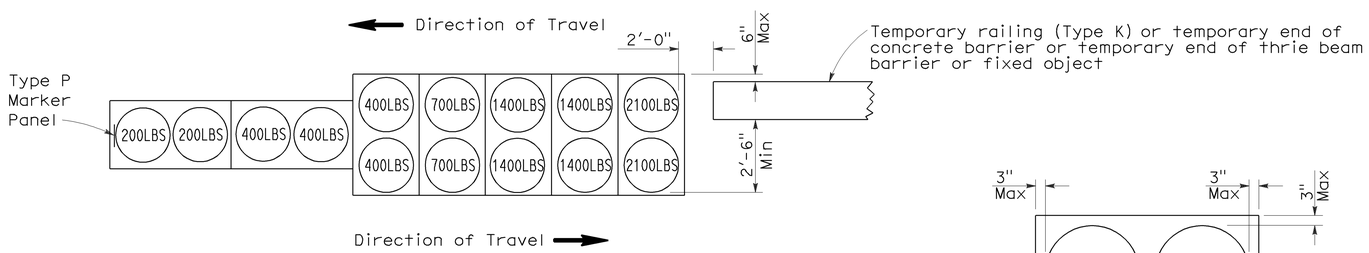

ARRAY 'TB14'

Approach speed 45 mph or more

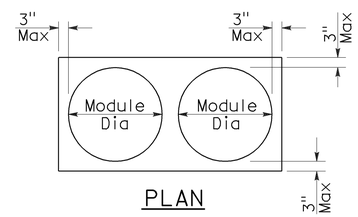

PLAN

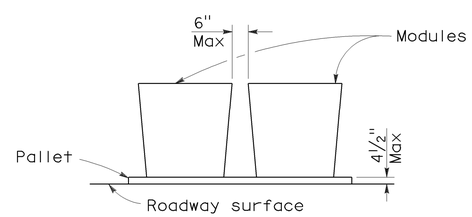

ELEVATION

CRASH CUSHION PALLET DETAIL

See Note 7

NOTES:

1. (XXX) Indicates sand filled module location and weight of sand in pounds for each module. Module spacing is based on the greater diameter of the module.
2. All sand weights are nominal.
3. Temporary crash cushion arrays shall not encroach on the traveled way.
4. Place the Type P marker panel so that the bottom of the panel rests upon the pallet.
5. Refer to Standard Plan A73B for marker details.
6. Approach speeds indicated conform to NCHRP 350 Report criteria.
7. Use of pallets is optional.

STATE OF CALIFORNIA
DEPARTMENT OF TRANSPORTATION

TEMPORARY CRASH CUSHION, SAND FILLED (BIDIRECTIONAL)

NO SCALE

RSP T1B DATED JUNE 6, 2008 SUPERSEDES STANDARD PLAN T1B
DATED MAY 1, 2006 - PAGE 212 OF THE STANDARD PLANS BOOK DATED MAY 2006.

REVISED STANDARD PLAN RSP T1B

2006 REVISED STANDARD PLAN RSP T1B

5-15-08

DIST	COUNTY	ROUTE	POST MILES TOTAL PROJECT	SHEET NO.	TOTAL SHEETS
11	SD	8	R39.7/R61.5	68	71

Randell D. Hiatt
REGISTERED CIVIL ENGINEER

June 6, 2008
PLANS APPROVAL DATE

REGISTERED PROFESSIONAL ENGINEER
Randell D. Hiatt
No. C50200
Exp. 6-30-09
CIVIL
STATE OF CALIFORNIA

The State of California or its officers or agents shall not be responsible for the accuracy or completeness of electronic copies of this plan sheet.

To accompany plans dated 01-18-11

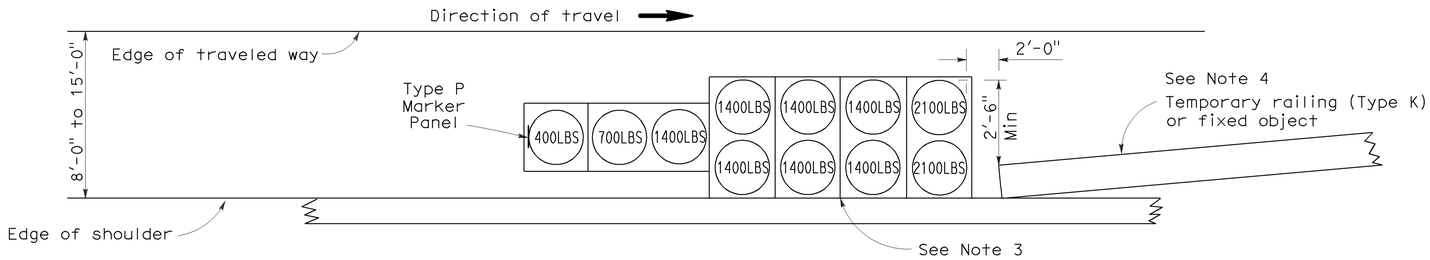

ARRAY 'TS11'

Approach speed less than 45 mph
See Note 9

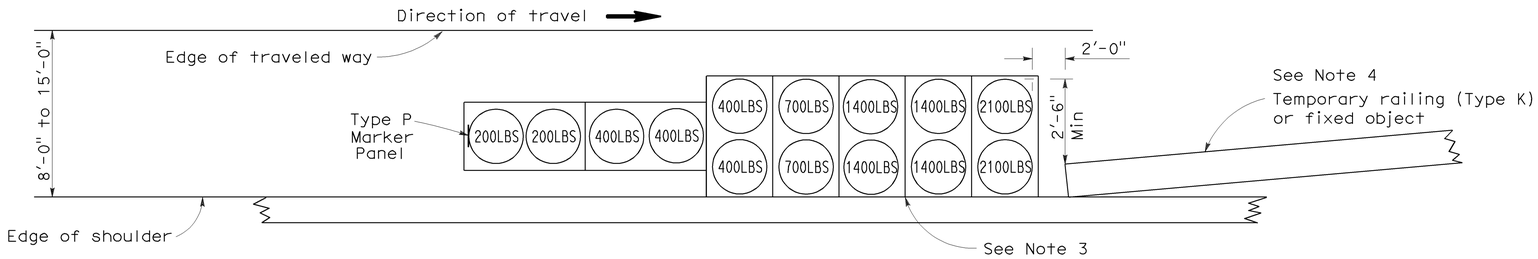

ARRAY 'TS14'

Approach speed 45 mph or more
See Note 9

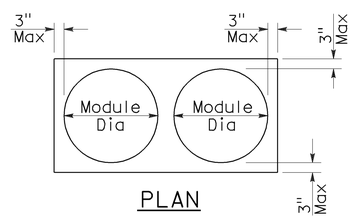

PLAN

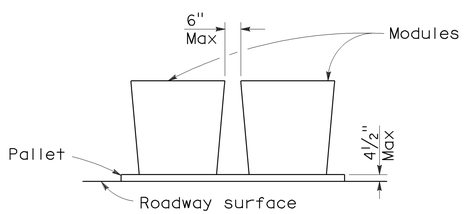

ELEVATION

CRASH CUSHION PALLET DETAIL

See Note 11

NOTES:

1. (XXX) Indicates sand filled module location and weight of sand in pounds for each module. Module spacing is based on the greater diameter of the module.
2. All sand weights are nominal.
3. The temporary crash cushion arrays shown on this plan shall be used only in locations where there will be traffic on one side of the temporary crash cushion array.
4. If the fixed object or approach end of the temporary railing is less than 15'-0" from the edge of traveled way, a temporary crash cushion is required in a construction or work zone.
5. Temporary crash cushion arrays shall not encroach on the traveled way.
6. Arrays for median shoulders shall conform to details shown on this plan for outside shoulders.
7. Place the Type P marker panel so that the bottom of the panel rests upon the pallet and faces traffic.
8. Refer to Standard Plan A73B for marker details.
9. For shoulder widths less than 8'-0", appropriate approved crash cushion protection, other than sand filled modules, shall be provided at fixed objects and at approach ends of temporary railing. The specific type of crash cushion shall be as shown on the project plans or as specified in the Special Provisions, or if not shown on the project plans or specified in the Special Provisions, shall be as approved by the Engineer.
10. Approach speeds indicated conform to NCHRP 350 Report criteria.
11. Use of pallets is optional.

STATE OF CALIFORNIA
DEPARTMENT OF TRANSPORTATION

TEMPORARY CRASH CUSHION, SAND FILLED (SHOULDER INSTALLATIONS)

NO SCALE

RSP T2 DATED JUNE 6, 2008 SUPERSEDES STANDARD PLAN T2
DATED MAY 1, 2006 - PAGE 213 OF THE STANDARD PLANS BOOK DATED MAY 2006.

REVISED STANDARD PLAN RSP T2

2006 REVISED STANDARD PLAN RSP T2

5-15-08

DIST	COUNTY	ROUTE	POST MILES TOTAL PROJECT	SHEET NO.	TOTAL SHEETS
11	SD	8	R39.7/R61.5	69	71

REGISTERED CIVIL ENGINEER

November 17, 2006
PLANS APPROVAL DATE

REGISTERED PROFESSIONAL ENGINEER — Greg W. Edwards — No. C36386 — Exp. 6-30-08 — CIVIL — STATE OF CALIFORNIA

The State of California or its officers or agents shall not be responsible for the accuracy or completeness of electronic copies of this plan sheet.

To accompany plans dated 01-18-11

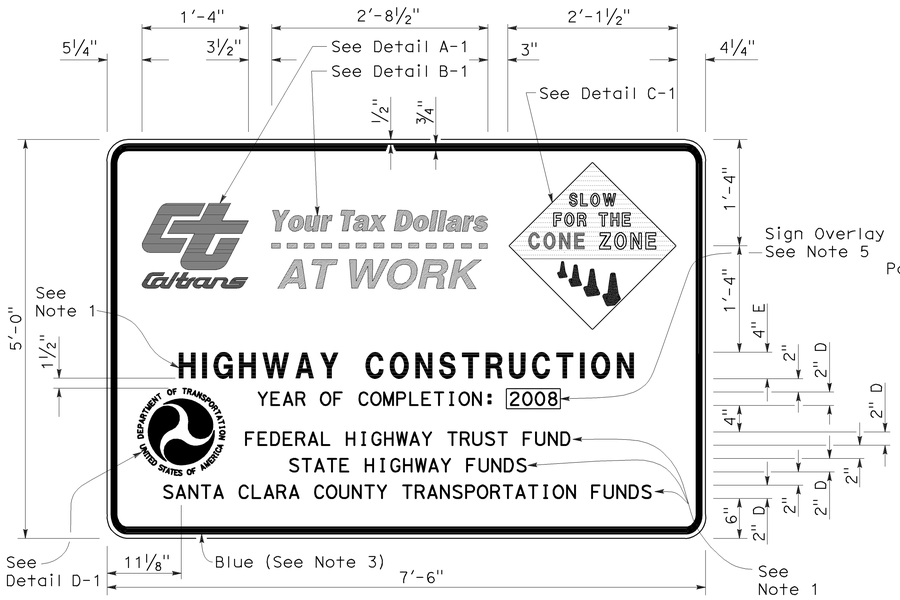

TYPE 1

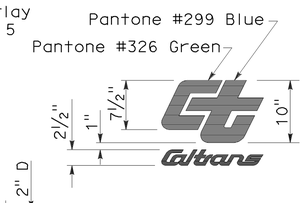

DETAIL A-1

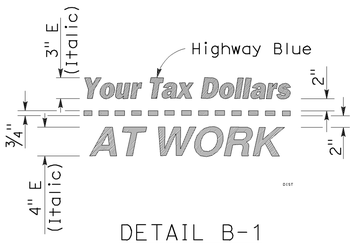

DETAIL B-1
(See Note 3)

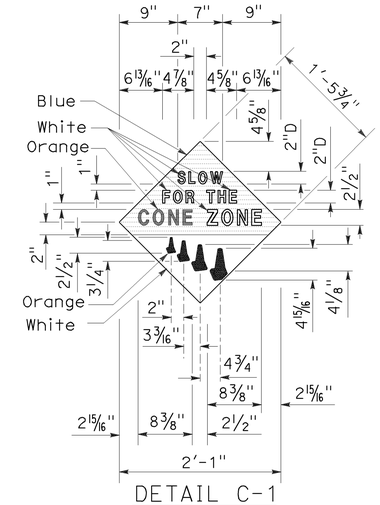

DETAIL C-1
(See Note 4)

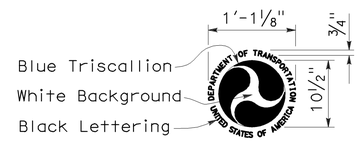

DETAIL D-1
(See Note 6)

NOTES:

1. The sign messages shown for type of project and fund types are examples only. See the Special Provisions for the applicable type of project and fund type messages to be used.
2. Except as otherwise shown, the legend of sign shall be black on a white background (non-reflective).
3. The border of the signs and details "B-1" and "B-2" shall be blue (non-reflective).
4. The diamond in details "C-1" and "C-2" shall be blue for the background of message, " SLOW FOR THE CONE ZONE", and white background for the orange cones. The color and type of font for the "SLOW FOR THE CONE ZONE" message shall be: "SLOW" white D; "FOR THE" white D; "CONE" orange Arial font; "ZONE" white Arial font.
5. Year of completion of project construction shown on the overlay is an example only. See the Special Provisions.
6. Use when the Project involves Federal Highway Trust Fund.

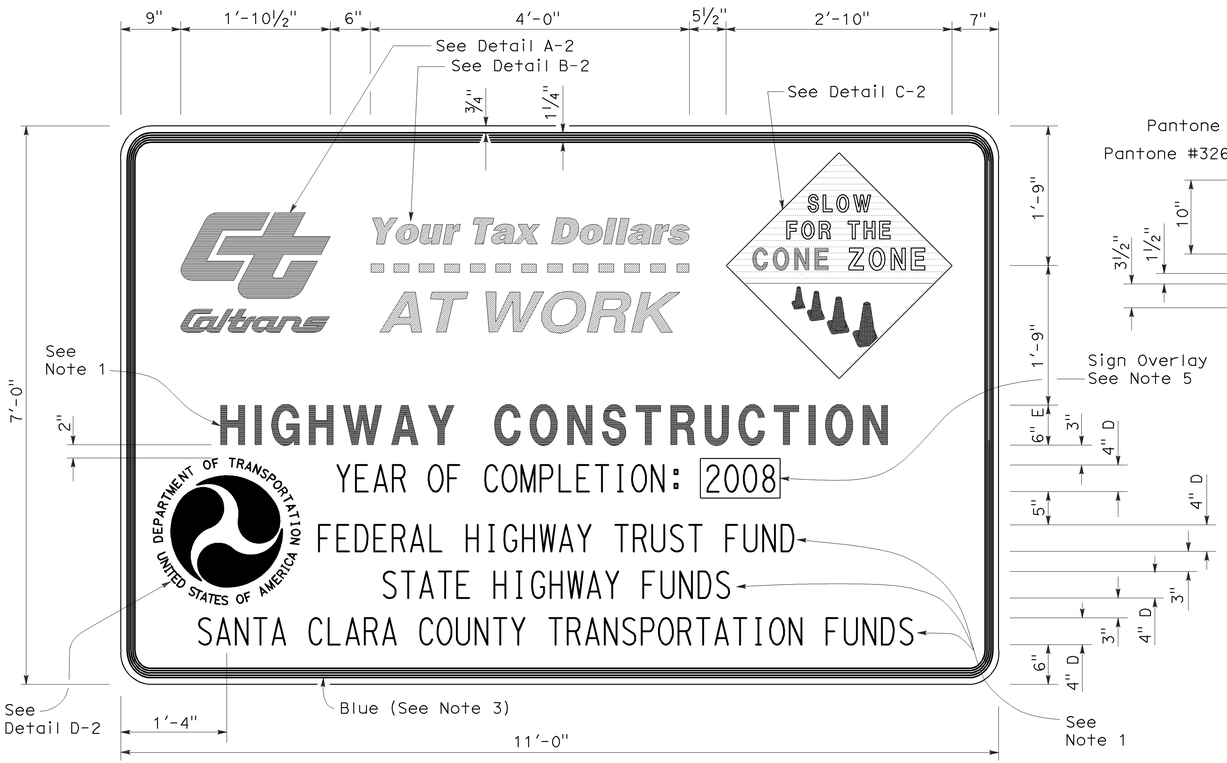

TYPE 2

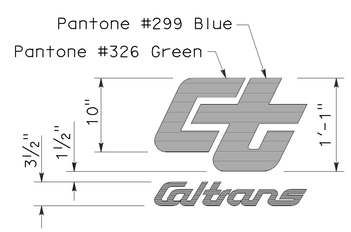

DETAIL A-2

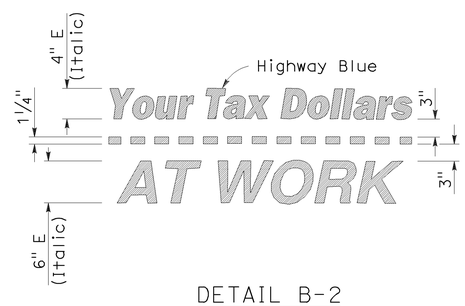

DETAIL B-2
(See Note 3)

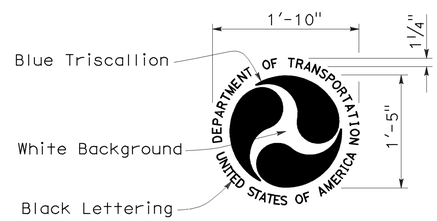

DETAIL D-2
(See Note 6)

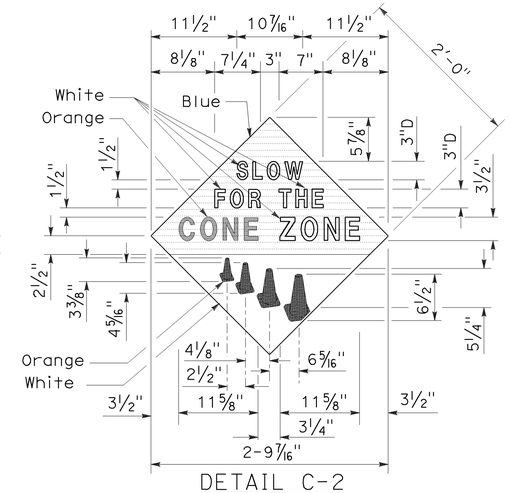

DETAIL C-2
(See Note 4)

STATE OF CALIFORNIA
DEPARTMENT OF TRANSPORTATION

CONSTRUCTION PROJECT FUNDING IDENTIFICATION SIGNS

NO SCALE

RSP T7 DATED NOVEMBER 17, 2006 SUPERSEDES STANDARD PLAN T7
DATED MAY 1, 2006 - PAGE 217 OF THE STANDARD PLANS BOOK DATED MAY 2006.

REVISED STANDARD PLAN RSP T7

2006 REVISED STANDARD PLAN RSP T7

9-7-06

DIST	COUNTY	ROUTE	POST MILES TOTAL PROJECT	SHEET No	TOTAL SHEETS
11	SD	8	R39.7/R61.5	70	71

Traci Menard 11/18/2010
REGISTERED CIVIL ENGINEER DATE

01-18-11
PLANS APPROVAL DATE

REGISTERED PROFESSIONAL ENGINEER Traci A. Menard No. 54207 Exp. 12/31/2011 CIVIL STATE OF CALIFORNIA

The State of California or its officers or agents shall not be responsible for the accuracy or completeness of electronic copies of this plan sheet.

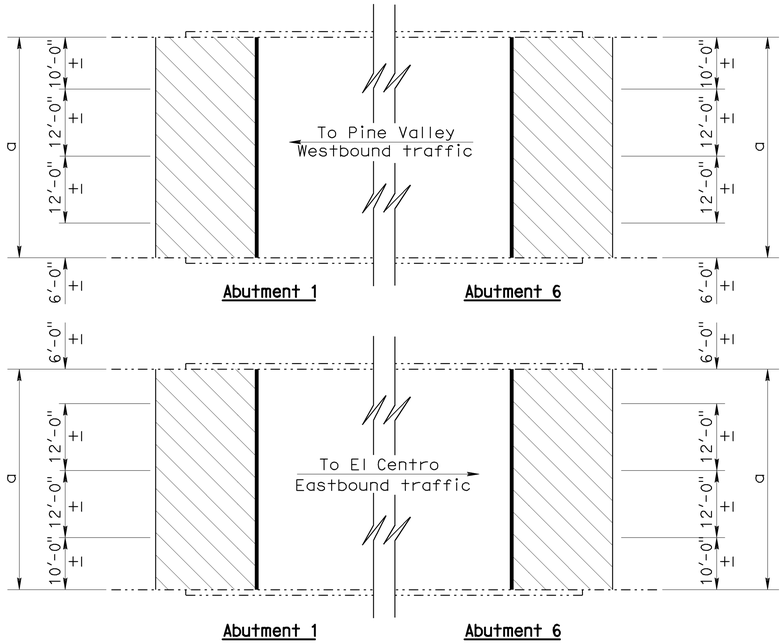

PLAN
No Scale

NOTES:
Approach defined as structure carrying traffic from roadway onto bridge.
Departure defined as structure carrying traffic from bridge onto roadway.

1. Transverse contact joint to be constructed parallel to paving notch for skews ≤ 10°0′ and perpendicular to direction of traffic for skews > 10°0′.
2. For approach/departure profile grade information, see Road Plans.

LEGEND:

Indicates location of joint seal removal and placement of new joint seal, see "JOINT SEAL DETAILS" sheet for details.

Indicates location and limits of structure approach/departure slab replacement.

Indicates existing structure

INDEX TO PLANS

Sheet No.	Title
1	GENERAL PLAN
2	STRUCTURE APPROACH TYPE R(30S)

STANDARD PLANS DATED May 2006

A10A	ACRONYMS AND ABBREVIATIONS (SHEET 1 OF 2)
A10B	ACRONYMS AND ABBREVIATIONS (SHEET 2 OF 2)
RSP B6-21	JOINT SEALS (MAXIMUM MOVEMENT RATING = 2")

STANDARD PLAN SHEET NO.
DETAIL NO.

KITCHEN CREEK BRIDGE STRUCTURE APPROACH AND DEPARTURE REPLACEMENT INFORMATION

EASTBOUND APPROACH			EASTBOUND DEPARTURE			WESTBOUND APPROACH			WESTBOUND DEPARTURE			QUANTITIES		
Skew	Type	a (ft)	Skew	Type	a (ft)	Skew	Type	a (ft)	Skew	Type	a (ft)	AGGREGATE BASE (APPROACH SLAB) (CY)	STRUCTURAL CONCRETE, APPROACH SLAB (TYPE R) (CY)	JOINT SEAL (MR 1½) (LF)
0°0′±	R(30S)	40.0±	0°0′±	R(30S)	40.0±	0°0′±	R(30S)	40.0±	0°0′±	R(30S)	40.0±	18	180	160

a = Width of new structure approach

JOINT SEAL TABLE

BRIDGE NAME	LOCATION		MINIMUM "MR" (in)	Approximate Length (LF)	Existing Waterstop (Y/N)	Approx. Depth to Clean Exp. Joint (in)
Kitchen Creek Bridge	Eastbound	Abut 1	1.5	40.0±	Y	8
		Abut 6	1.5	40.0±	Y	8
	Westbound	Abut 1	1.5	40.0±	Y	8
		Abut 6	1.5	40.0±	Y	8

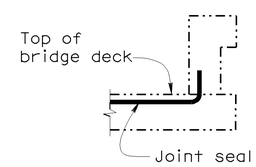

BARRIER RAIL

JOINT SEAL AT LOW SIDE OF DECK

Details shown for illustration purposes only.
For use only where deck joint matches the sidewalk, curb or barrier rail joint.

The following notes apply to JOINT SEAL TYPE B:

1) Seal must satisfy both minimum Movement Rating (MR) and minimum W1 requirements.
2) Minimum W1 is the calculated maximum width of the joint based on field measurements. After the joints have been cleaned, minimum W1 is to be recalculated by the Engineer.
3) W1 shall be the smaller of the values determined as follows:
   A) 0.85 times the manufacturer's designed minimum uncompressed width of the seal.
   B) The width of the seal on the third successive test cycle of the pressure deflection test, when compressed to an average pressure of 3 psi.
4) Bend Type B joint seal 6 in. up into curb or rail on the low side of the deck where deck joint matches curb or rail joint.
5) For details not shown see, RSP B6-21

NOTE:
THE CONTRACTOR SHALL VERIFY ALL CONTROLLING FIELD DIMENSIONS BEFORE ORDERING OR FABRICATING ANY MATERIAL.

NO SCALE

T. Menard
DESIGN ENGINEER

	BY	CHECKED
DESIGN	T. Menard	C. Chan
DETAILS	T.Trefz	C. Chan
QUANTITIES	T. Menard	C. Chan

LOAD & RESISTANCE FACTOR DESIGN — LIVE LOADING: HL93 W/"LOW-BOY"; PERMIT DESIGN VEHICLE
LAYOUT: T. Menard — CHECKED: C. Chan
SPECIFICATIONS: E. Rufino — PLANS AND SPECS COMPARED: T. Menard

ORIGINAL SCALE IN INCHES FOR REDUCED PLANS 0 1 2 3

STATE OF CALIFORNIA
DEPARTMENT OF TRANSPORTATION

DIVISION OF ENGINEERING SERVICES
STRUCTURE DESIGN
DESIGN BRANCH 15

CU 11
EA 2M1601

BRIDGE NO. 57-0698R/L
POST MILE R50.64

KITCHEN CREEK BRIDGE APPROACH AND DEPARTURE SLAB REPLACEMENT
GENERAL PLAN

DISREGARD PRINTS BEARING EARLIER REVISION DATES
REVISION DATES: 04-14-10 04-28-10 05-18-10

SHEET 1 OF 2

STRUCTURES DESIGN GENERAL PLAN SHEET (ENGLISH) (REV.07-24-06)

FILE => 11-2m1601-a-gp.dgn

USERNAME => s136545 DATE PLOTTED => 18-NOV-2010 TIME PLOTTED => 07:14

DIST.	COUNTY	ROUTE	MILE POST TOTAL PROJECT	SHEET NO.	TOTAL SHEETS
11	SD	8	R39.7/R61.5	71	71

REGISTERED ENGINEER - CIVIL

01-18-11

PLANS APPROVAL DATE

REGISTERED PROFESSIONAL ENGINEER Traci A. Menard No. 54207 Exp. 12/31/2009 CIVIL STATE OF CALIFORNIA

The State of California or its officers or agents shall not be responsible for the accuracy or completeness of electronic copies of this plan sheet.

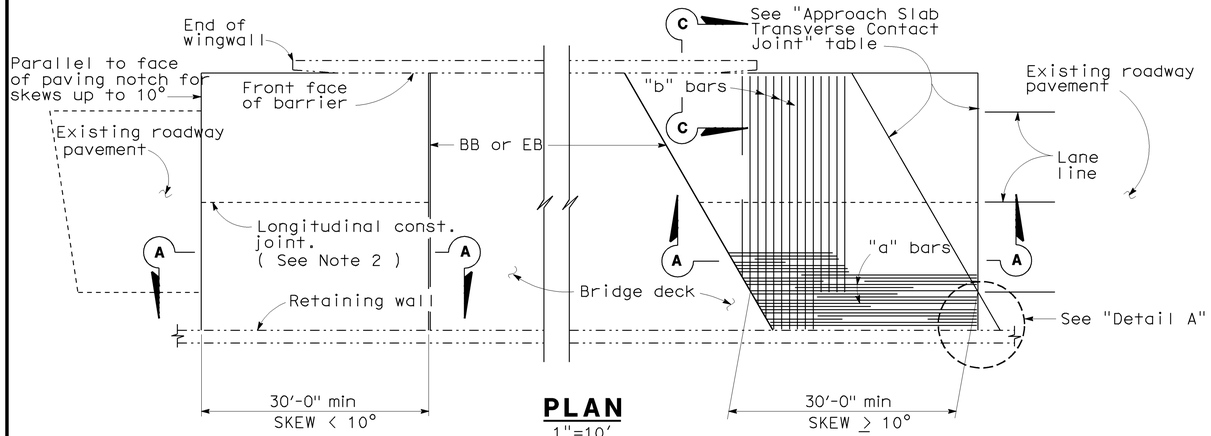

PLAN

1"=10'

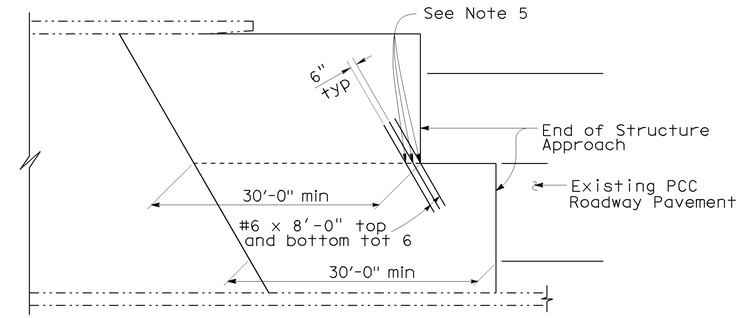

STRUCTURE APPROACH - END STAGGER DETAIL

No Scale

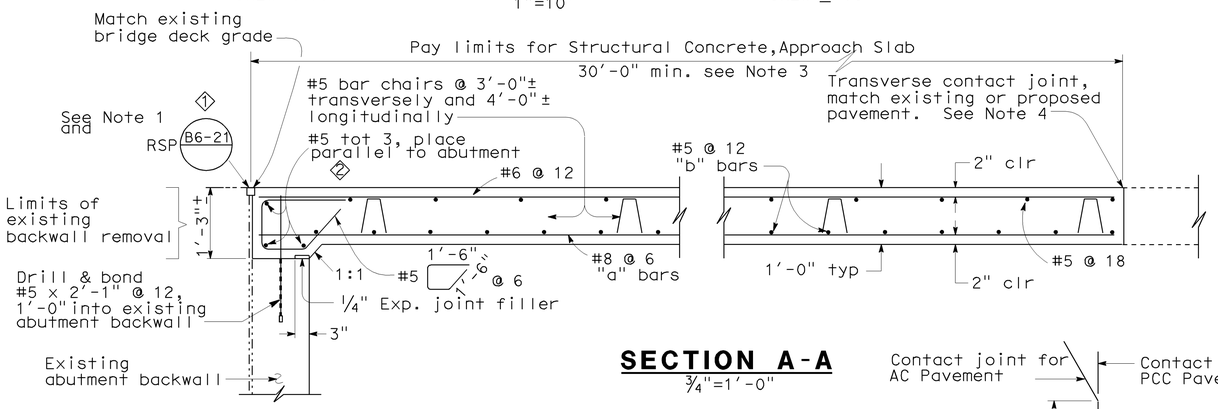

SECTION A-A

3/4"=1'-0"

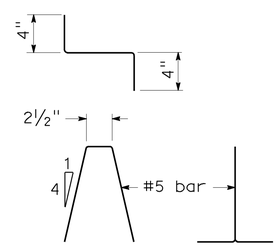

BAR CHAIR DETAIL

1 1/2"=1'-0"

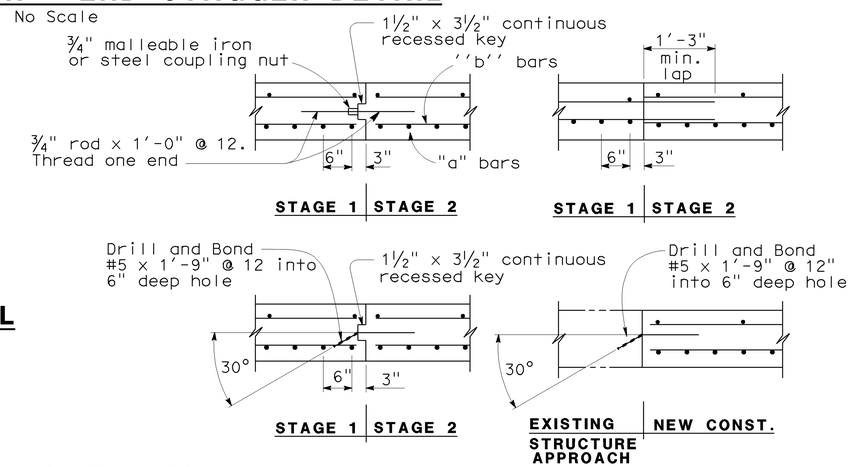

LONGITUDINAL CONSTRUCTION JOINT ALTERNATIVES

3/4"=1'-0"

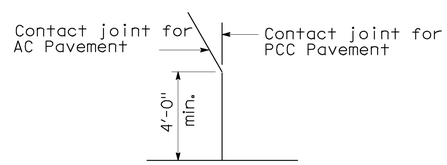

DETAIL A

No Scale

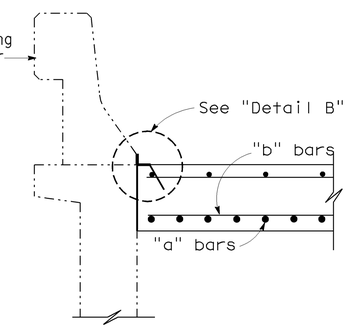

SECTION C-C

3/4"=1'-0"

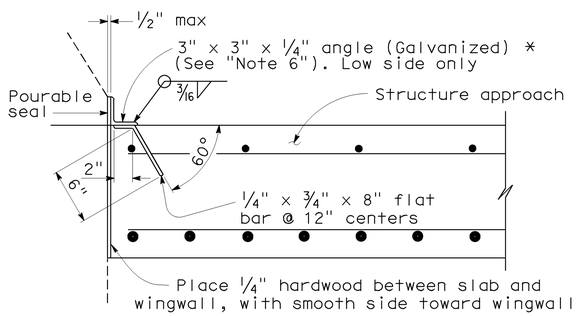

*(TO BE USED WITH TYPE 25 OR TYPE 27 CONCRETE BARRIER)

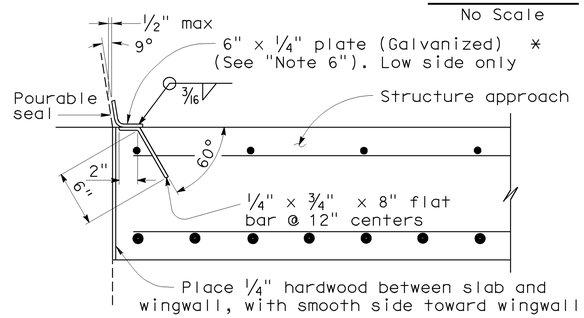

*(TO BE USED WITH TYPE 732 OR TYPE 736 CONCRETE BARRIER)

DETAIL B

1 1/2"=1'-0"

NOTE:

THE CONTRACTOR SHALL VERIFY ALL CONTROLLING FIELD DIMENSIONS BEFORE ORDERING OR FABRICATING ANY MATERIAL.

APPROACH SLAB TRANSVERSE CONTACT JOINT

APPROACH SKEW	WITH AC ROADWAY PAVEMENT	WITH PCC ROADWAY PAVEMENT
< 10°	Parallel to face of paving notch	Parallel to face of paving notch
10°- 45°	Parallel to face of P N use (Detail A)	Stagger lines 24' to 36' apart
> 45°	Parallel to face of P N use (Detail A)	Stagger at each lane line

NOTES:

1. Sealed joint, for M.R. see Structure Plans. Adjust bar reinforcement to clear a sawcut for sealed joint, when required.
2. Longitudinal construction joints, when permitted by Engineer, shall be located on lane lines.
3. Transverse contact joint shall be a minimum of 5'-0" from an existing or constructed weakened plane joint.
4. For transverse contact joint with new PCC paving, refer to Standard Plan P10.
5. Couplers are required for stage construction.
6. End angle or plate at beginning of barrier transition, end of wingwall or end of structure approach as applicable.

STANDARD DRAWING

RELEASE DATE 3/14/05	DESIGN	BY M.TRAFFALIS	CHECKED E.THORKILDSEN	RELEASED BY
	DETAILS	BY R.YEE	CHECKED E.THORKILDSEN	
FILE NO. xs3-130e	SUBMITTED	BY M.HA	DRAWING DATE 8/92	OFFICE CHIEF

1 "RSP" added to detail call-out B6-21
2 Modified note

STATE OF CALIFORNIA
DEPARTMENT OF TRANSPORTATION

DIVISION OF ENGINEERING SERVICES

BRIDGE NO. 57-0698R/L
MILE POST R50.64

KITCHEN CREEK BRIDGE APPROACH AND DEPARTURE SLAB REPLACEMENT

STRUCTURE APPROACH TYPE R(30S)

DS OSD 2147A (ENGLISH) (REV. X/XX/XX)

ORIGINAL SCALE IN INCHES FOR REDUCED PLANS 0 1 2 3

CU 11
EA 2M1601

DISREGARD PRINTS BEARING EARLIER REVISION DATES

REVISION DATES (PRELIMINARY STAGE ONLY) 04-14-10 04-28-10 05-18-10

SHEET 2 OF 2

FILE => 11-2m1601-s-sa.dgn

USERNAME => s136545 DATE PLOTTED => 18-NOV-2010 TIME PLOTTED => 07:14