Dist	COUNTY	ROUTE	POST MILES TOTAL PROJECT	SHEET No.	TOTAL SHEETS
11	SD	94,188	30.0/39.0, 0.2/1.9	1	20

INDEX OF PLANS

SHEET NO.	DESCRIPTION
1	TITLE AND LOCATION MAP
2-3	TYPICAL CROSS SECTIONS
4-7	CONSTRUCTION DETAILS
8	CONSTRUCTION AREA SIGNS
9-10	PAVEMENT DELINEATION QUANTITIES
11-12	SUMMARY OF QUANTITIES
13-16	TRAFFIC CONTROL SYSTEM
17-20	REVISED STANDARD PLANS

THE STANDARD PLANS LIST APPLICABLE TO THIS CONTRACT IS INCLUDED IN THE NOTICE TO BIDDERS AND SPECIAL PROVISIONS BOOK.

STATE OF CALIFORNIA

DEPARTMENT OF TRANSPORTATION

PROJECT PLANS FOR CONSTRUCTION ON

STATE HIGHWAY

IN SAN DIEGO COUNTY NEAR DULZURA ON ROUTE 94 FROM 0.9 MILE EAST OF GRANDE CREEK BRIDGE TO ROUTE 188 AND ON ROUTE 188 FROM 0.2 MILE NORTH OF MEXICO BORDER TO ROUTE 94

TO BE SUPPLEMENTED BY STANDARD PLANS DATED 2010

LOCATION MAP

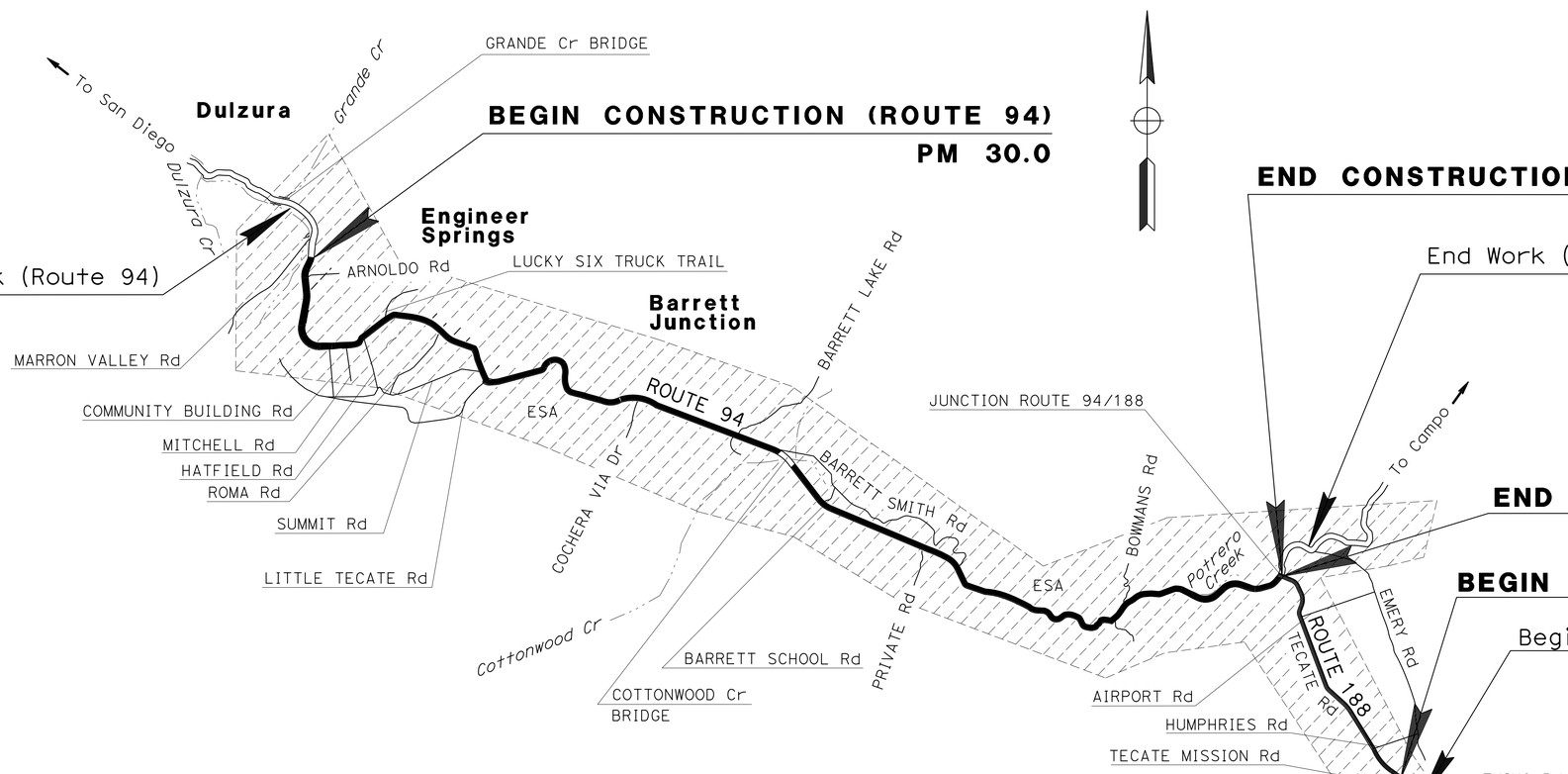

Hamed S. Baha 01-28-13
PROJECT ENGINEER DATE
REGISTERED CIVIL ENGINEER

February 25, 2013
PLANS APPROVAL DATE

REGISTERED PROFESSIONAL ENGINEER HAMED S. BAHA No. 74499 Exp. 12-31-13 CIVIL STATE OF CALIFORNIA

THE STATE OF CALIFORNIA OR ITS OFFICERS OR AGENTS SHALL NOT BE RESPONSIBLE FOR THE ACCURACY OR COMPLETENESS OF SCANNED COPIES OF THIS PLAN SHEET.

PROJECT MANAGER ALBERTO GAYON

DESIGN ENGINEER HAMED BAHA

THE CONTRACTOR SHALL POSSESS THE CLASS (OR CLASSES) OF LICENSE AS SPECIFIED IN THE "NOTICE TO BIDDERS."

NO SCALE

CONTRACT No.	11-2M4104
PROJECT ID	1100020405

LAST REVISION 02-04-13

DATE PLOTTED => 26-FEB-2013
TIME PLOTTED => 10:52

Dist	COUNTY	ROUTE	POST MILES TOTAL PROJECT	SHEET No.	TOTAL SHEETS
11	SD	94,188	30.0/39.0, 0.2/1.9	2	20

Hamed S. Baha 01-28-13
REGISTERED CIVIL ENGINEER DATE

02-25-13
PLANS APPROVAL DATE

REGISTERED PROFESSIONAL ENGINEER HAMED S. BAHA No. 74499 Exp. 12-31-13 CIVIL STATE OF CALIFORNIA

THE STATE OF CALIFORNIA OR ITS OFFICERS OR AGENTS SHALL NOT BE RESPONSIBLE FOR THE ACCURACY OR COMPLETENESS OF SCANNED COPIES OF THIS PLAN SHEET.

DESIGN DESIGNATION (Rte 094)

ADT (2008) = 7,200 D = 51.7 % (WB)
ADT (2020) = 10,500 T = 8.3%
DHV (2020) = 880 V = 35 - 50 MPH

DESIGN DESIGNATION (Rte 188)

ADT (2008) = 6,362 D = 50.63% (NB)
ADT (2020) = 9,439 T = 10.3%
DHV (2020) = 800 V = 35 - 50 MPH

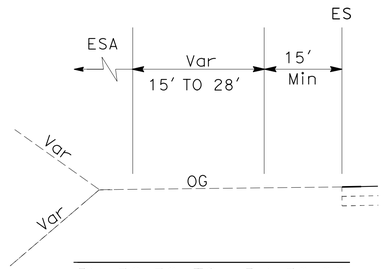

PM 38.36 TO PM 38.68

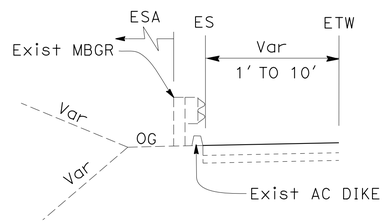

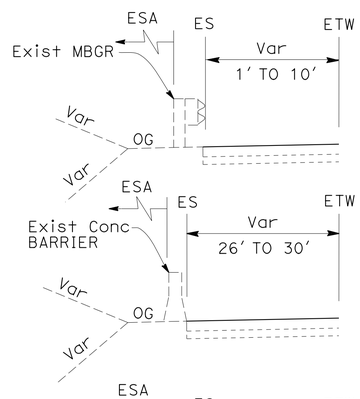

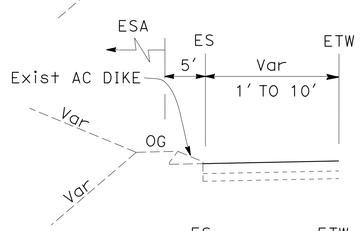

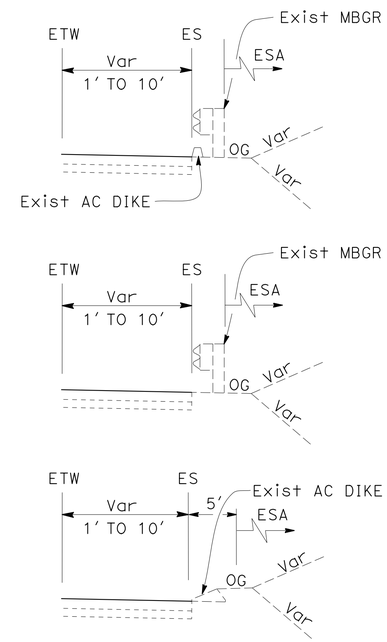

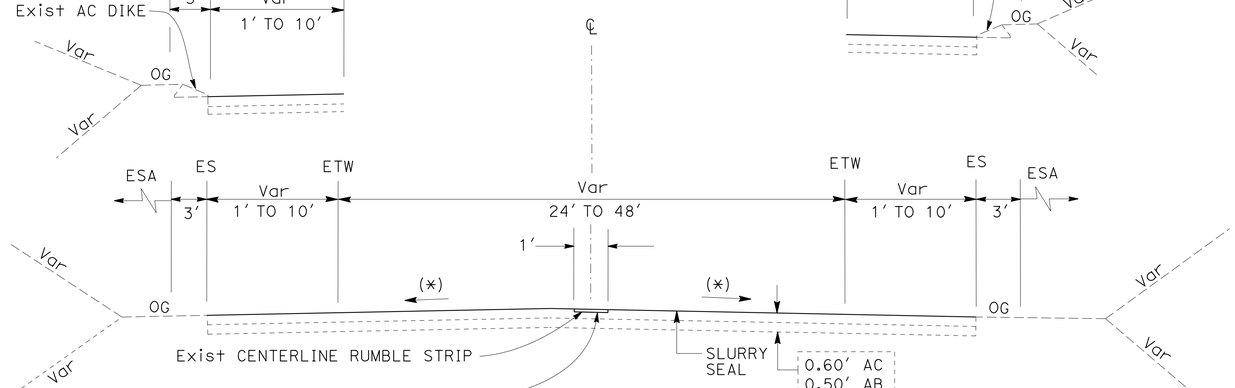

ROUTE 94

PM 30.0 TO PM 39.0

NOTES:

1. DIMENSIONS OF THE PAVEMENT STRUCTURES (STRUCTURAL SECTIONS) ARE SUBJECT TO THE TOLERANCES SPECIFIED IN THE STANDARD SPECIFICATIONS.
2. EXISTING UTILITY AND ELECTRICAL FACILITIES HAVE NOT BEEN PLOTTED ON THESE PLANS.
3. STAGING AREAS FOR THE STORAGE OF EQUIPMENT HAVE NOT BEEN SHOWN ON PLANS. STORED EQUIPMENT MUST BE PLACED FAR ENOUGH AS NOT TO DISTURB ANY EXISTING VEGETATION.
4. APPLY FOG SEAL AT Exist AC DIKE, HMA DIKE, RUMBLE STRIP AND Misc AREAS.
5. FOR TYPE AND LOCATIONS OF HMA DIKE, SEE SUMMARY OF QUANTITIES SHEETS.
6. (*) = MATCH EXISTING.

TYPICAL CROSS SECTIONS

NO SCALE

X-1

STATE OF CALIFORNIA - DEPARTMENT OF TRANSPORTATION
Caltrans®
MAINTENANCE

FUNCTIONAL SUPERVISOR: ALBRTO GAYON
CALCULATED-DESIGNED BY: HAMED BAHA
CHECKED BY: REBECCA IGNACIO
REVISED BY
DATE REVISED

LAST REVISION 02-04-13
DATE PLOTTED => 26-FEB-2013
TIME PLOTTED => 10:52

Dist	COUNTY	ROUTE	POST MILES TOTAL PROJECT	SHEET No.	TOTAL SHEETS
11	SD	94,188	30.0/39.0, 0.2/1.9	3	20

Hamed S. Baha 01-28-13
REGISTERED CIVIL ENGINEER DATE

02-25-13
PLANS APPROVAL DATE

REGISTERED PROFESSIONAL ENGINEER
HAMED S. BAHA
No. 74499
Exp. 12-31-13
CIVIL
STATE OF CALIFORNIA

THE STATE OF CALIFORNIA OR ITS OFFICERS OR AGENTS SHALL NOT BE RESPONSIBLE FOR THE ACCURACY OR COMPLETENESS OF SCANNED COPIES OF THIS PLAN SHEET.

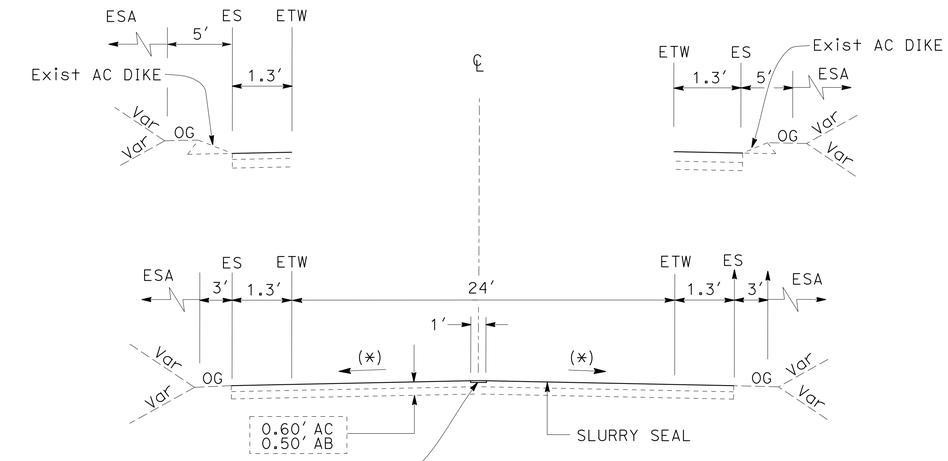

CENTERLINE RUMBLE STRIP
(HMA, GROUND-IN INDENTATIONS)

ROUTE 188

PM 0.6 TO PM 1.85

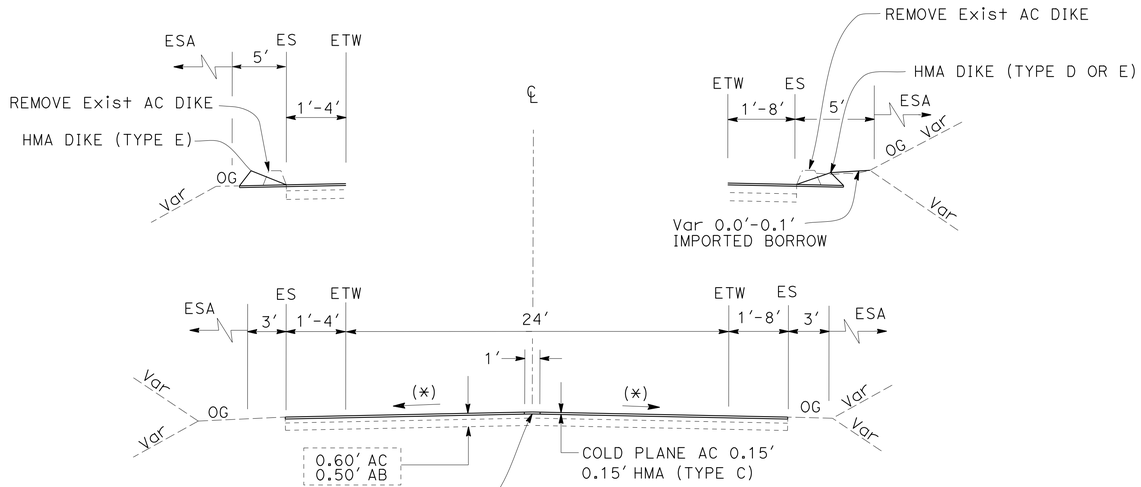

CENTERLINE RUMBLE STRIP
(HMA, GROUND-IN INDENTATIONS)

ROUTE 188

PM 0.23 TO PM 0.6

TYPICAL CROSS SECTIONS

NO SCALE

X-2

STATE OF CALIFORNIA - DEPARTMENT OF TRANSPORTATION
Caltrans®
MAINTENANCE

FUNCTIONAL SUPERVISOR: ALBRTO GAYON
CALCULATED-DESIGNED BY: HAMED BAHA
CHECKED BY: REBECCA IGNACIO
REVISED BY
DATE REVISED

LAST REVISION 02-04-13
DATE PLOTTED => 26-FEB-2013
TIME PLOTTED => 10:52

Dist	COUNTY	ROUTE	POST MILES TOTAL PROJECT	SHEET No.	TOTAL SHEETS
11	SD	94,188	30.0/39.0, 0.2/1.9	4	20

Hamed S. Baha 01-28-13
REGISTERED CIVIL ENGINEER DATE

02-25-13
PLANS APPROVAL DATE

REGISTERED PROFESSIONAL ENGINEER
HAMED S. BAHA
No. 74499
Exp. 12-31-13
CIVIL
STATE OF CALIFORNIA

THE STATE OF CALIFORNIA OR ITS OFFICERS OR AGENTS SHALL NOT BE RESPONSIBLE FOR THE ACCURACY OR COMPLETENESS OF SCANNED COPIES OF THIS PLAN SHEET.

NOTES:

1. 4" THERMOPLASTIC TRAFFIC STRIPE SHALL BE PLACED OVER CENTERLINE RUMBLE STRIP.
2. ALL PAVEMENT DELINEATION SHALL BE REPLACED IN KIND UNLESS INDICATED OTHERWISE.
3. REPLACE EXISTING GROUND-IN RUMBLE STRIPS IN-KIND PER Std PLAN A40B.
4. GROUND-IN RUMBLE STRIP INDENTATIONS SHALL NOT BE PLACED AT INTERSECTIONS, TURN LOCATIONS AND BRIDGES.

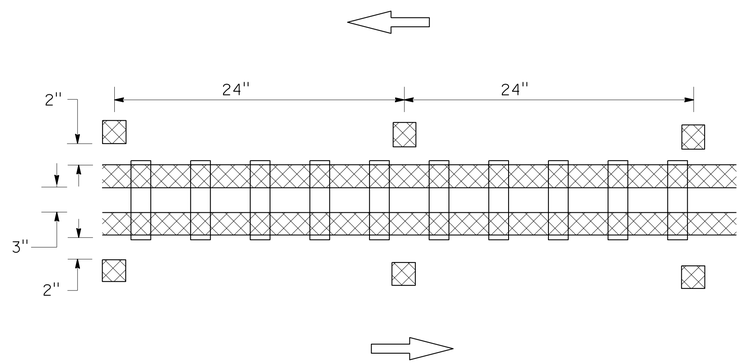

DETAIL 22

(WITH RUMBLE STRIP)

Rte 94: PM 30.0 TO PM 34.0
PM 34.6 TO PM 35.0
PM 35.4 TO PM 35.5
PM 36.1 TO PM 39.0

Rte 188: PM 0.2 TO PM 1.9

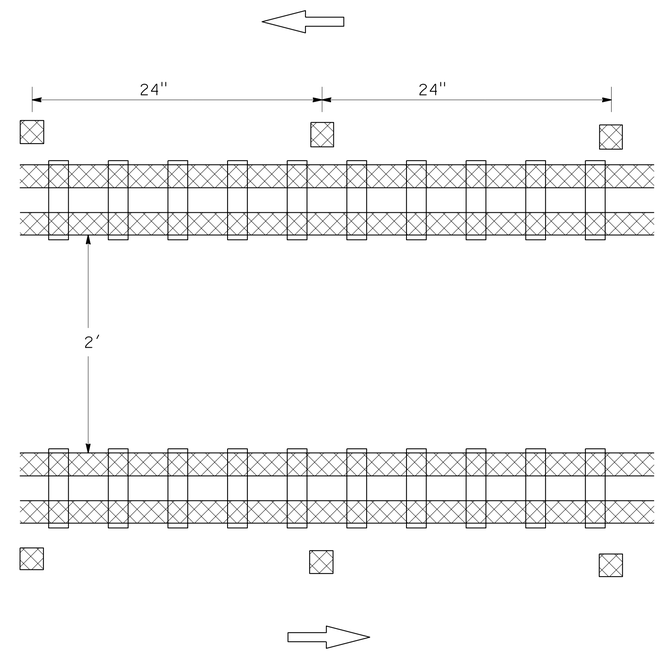

DETAIL 29

(WITH RUMBLE STRIP)

Rte 94: PM 34.3 TO PM 34.6

LEGEND:

= CENTERLINE RUMBLE STRIP (HMA, GROUND-IN INDENTATIONS)

CONSTRUCTION DETAILS

NO SCALE

C-1

REVISED BY | DATE REVISED
HAMED BAHA | REBECCA IGNACIO
CALCULATED-DESIGNED BY | CHECKED BY
FUNCTIONAL SUPERVISOR
ALBRTO GAYON

STATE OF CALIFORNIA - DEPARTMENT OF TRANSPORTATION
Caltrans
MAINTENANCE

LAST REVISION 02-04-13 | DATE PLOTTED => 26-FEB-2013 | TIME PLOTTED => 10:52

Dist	COUNTY	ROUTE	POST MILES TOTAL PROJECT	SHEET No.	TOTAL SHEETS
11	SD	94,188	30.0/39.0, 0.2/1.9	5	20

Hamed S. Baha 01-28-13
REGISTERED CIVIL ENGINEER DATE

02-25-13
PLANS APPROVAL DATE

REGISTERED PROFESSIONAL ENGINEER
HAMED S. BAHA
No. 74499
Exp. 12-31-13
CIVIL
STATE OF CALIFORNIA

THE STATE OF CALIFORNIA OR ITS OFFICERS OR AGENTS SHALL NOT BE RESPONSIBLE FOR THE ACCURACY OR COMPLETENESS OF SCANNED COPIES OF THIS PLAN SHEET.

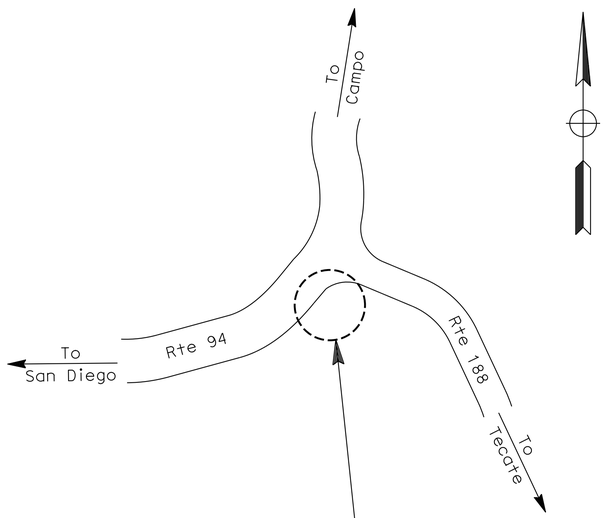

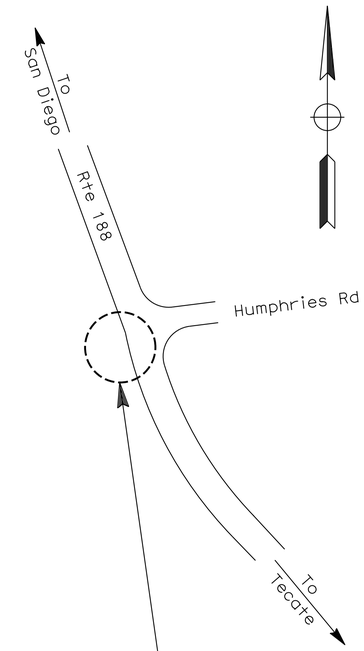

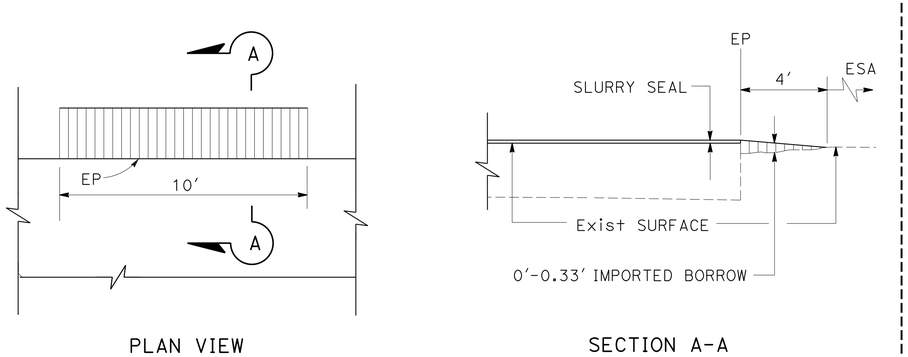

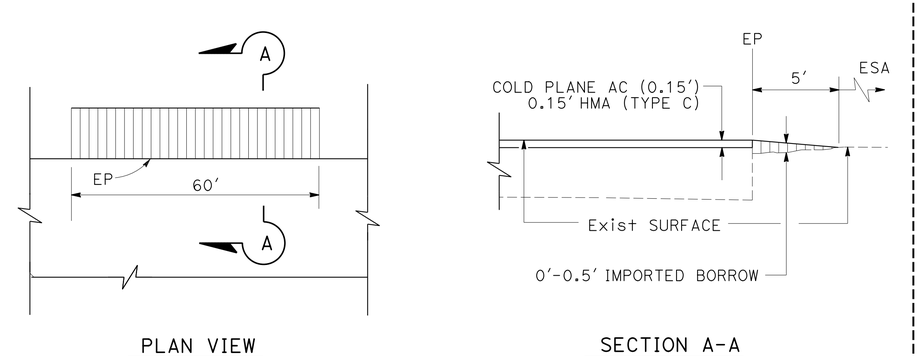

IMPORTED BORROW DETAIL

EB ROUTE 94 = PM 38.9

IMPORTED BORROW DETAIL

SB ROUTE 188 = PM 0.6

CONSTRUCTION DETAILS

NO SCALE

C-2

STATE OF CALIFORNIA - DEPARTMENT OF TRANSPORTATION
Caltrans
MAINTENANCE

FUNCTIONAL SUPERVISOR: ALBRTO GAYON
CALCULATED-DESIGNED BY: HAMED BAHA
CHECKED BY: REBECCA IGNACIO
REVISED BY
DATE REVISED

LAST REVISION 02-04-13
DATE PLOTTED => 26-FEB-2013
TIME PLOTTED => 10:52

Dist	COUNTY	ROUTE	POST MILES TOTAL PROJECT	SHEET No.	TOTAL SHEETS
11	SD	94,188	30.0/39.0, 0.2/1.9	6	20

Hamed S. Baha 01-28-13
REGISTERED CIVIL ENGINEER DATE

02-25-13
PLANS APPROVAL DATE

REGISTERED PROFESSIONAL ENGINEER
HAMED S. BAHA
No. 74499
Exp. 12-31-13
CIVIL
STATE OF CALIFORNIA

THE STATE OF CALIFORNIA OR ITS OFFICERS OR AGENTS SHALL NOT BE RESPONSIBLE FOR THE ACCURACY OR COMPLETENESS OF SCANNED COPIES OF THIS PLAN SHEET.

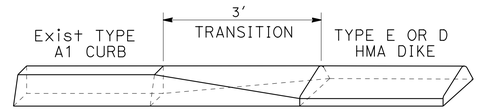

A1 CURB TO HMA DIKE (TYPE E OR D) DETAIL

NB Rte 188 (PM): 0.23; 0.26; 0.53

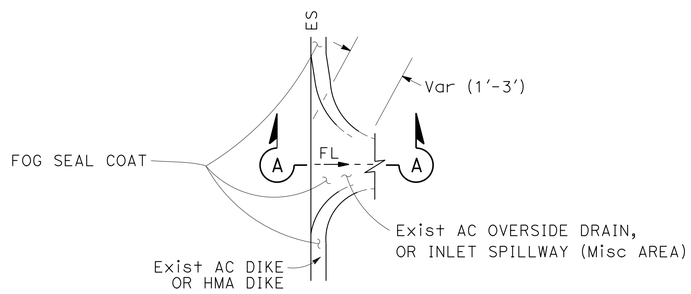

PLAN VIEW

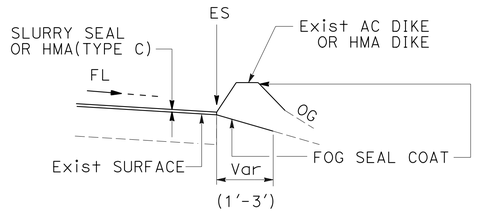

SECTION A-A

FOG SEAL COAT AT OVERSIDE DRAIN/INLET SPILLWAY AND HMA DIKE (Misc AREA) DETAIL

EB Rte 94 (PM): 31.11-31.18; 31.22-31.46; 31.56; 33.01; 34.42; 34.67; 35.93; 36.20; 36.27

WB Rte 94 (PM): 32.74; 33.45; 35.35-35.51; 35.57-36.00; 36.06; 36.14; 36.30; 36.41-36.49; 37.66-38.02; 38.77; 38.89-38.92

NB Rte 188 (PM): 0.75-0.86

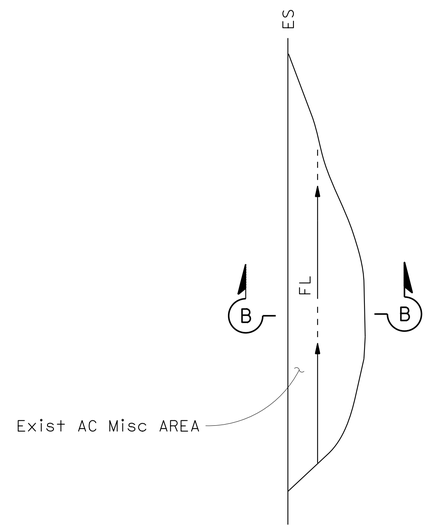

PLAN VIEW

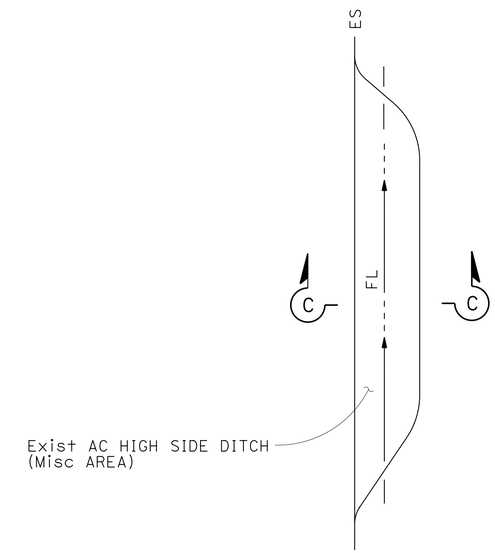

PLAN VIEW

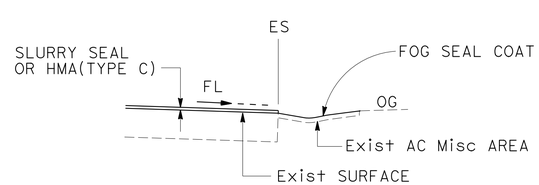

SECTION B-B

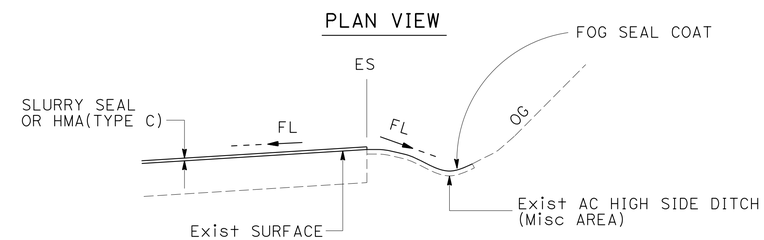

SECTION C-C

FOG SEAL COAT AT Misc AREA AND HIGH SIDE DITCH (Misc AREA) DETAIL

EB Rte 94 (PM): 35.14-35.27; 35.43-35.66; 35.94-36.04; 36.27-36.37; 35.14-35.27; 35.43-35.66; 35.94-36.04; 36.27-36.37; 36.00-38.02; 38.06-38.09; 38.14-38.15; 38.21-38.24; 38.85-38.86

WB Rte 94 (PM): 33.37-33.40; 33.75-33.86

NB Rte 188 (PM): 0.75-0.90

CONSTRUCTION DETAILS

NO SCALE

C-3

REVISED BY | DATE REVISED
HAMED BAHA | REBECCA IGNACIO
CALCULATED-DESIGNED BY | CHECKED BY
FUNCTIONAL SUPERVISOR | ALBRTO GAYON
STATE OF CALIFORNIA - DEPARTMENT OF TRANSPORTATION
Caltrans
MAINTENANCE

LAST REVISION 02-04-13 | DATE PLOTTED => 26-FEB-2013 | TIME PLOTTED => 10:52

Dist	COUNTY	ROUTE	POST MILES TOTAL PROJECT	SHEET No.	TOTAL SHEETS
11	SD	94,188	30.0/39.0, 0.2/1.9	7	20

Hamed J. Baha 01-28-13
REGISTERED CIVIL ENGINEER DATE

02-25-13
PLANS APPROVAL DATE

REGISTERED PROFESSIONAL ENGINEER HAMED S. BAHA No. 74499 Exp. 12-31-13 CIVIL STATE OF CALIFORNIA

THE STATE OF CALIFORNIA OR ITS OFFICERS OR AGENTS SHALL NOT BE RESPONSIBLE FOR THE ACCURACY OR COMPLETENESS OF SCANNED COPIES OF THIS PLAN SHEET.

LEGEND:

= COLD PLANE AC (0.15') 0.15' HMA (TYPE C)

= SLURRY SEAL

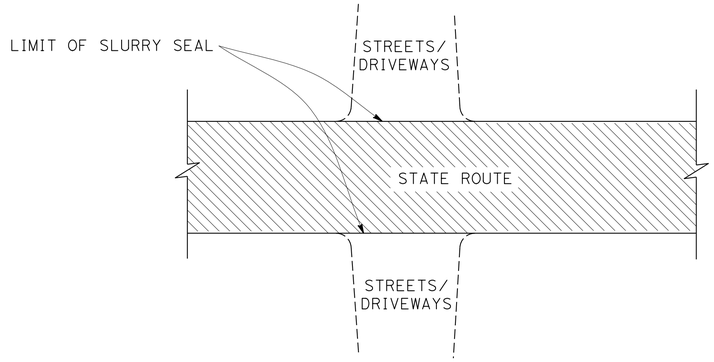

TYPICAL SLURRY SEAL LIMIT ON STREETS AND DRIVEWAYS

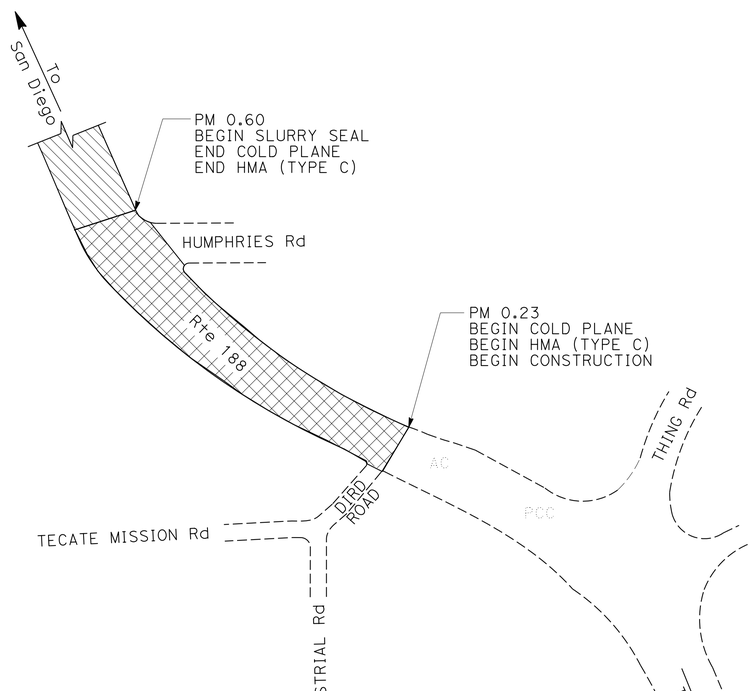

COLD PLANE LIMIT DETAIL

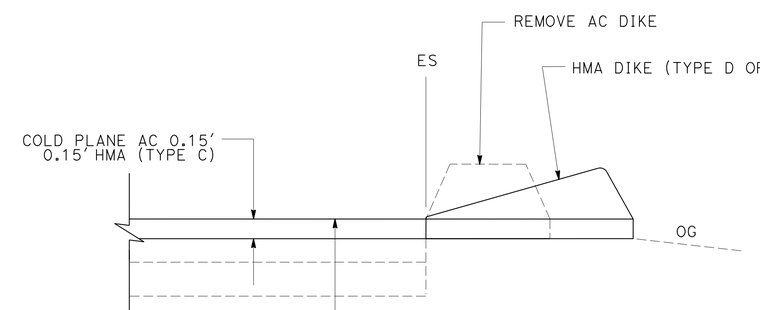

SHOULDER PAD UNDER HMA DIKE DETAIL

(SEE SUMMARY OF QUANTITY FOR LOCATIONS)

CONSTRUCTION DETAILS

NO SCALE

C-4

STATE OF CALIFORNIA - DEPARTMENT OF TRANSPORTATION
Caltrans
MAINTENANCE

FUNCTIONAL SUPERVISOR: ALBRTO GAYON
CALCULATED-DESIGNED BY: HAMED BAHA
CHECKED BY: REBECCA IGNACIO
REVISED BY
DATE REVISED

LAST REVISION 02-04-13 | DATE PLOTTED => 26-FEB-2013 | TIME PLOTTED => 10:52

Dist	COUNTY	ROUTE	POST MILES TOTAL PROJECT	SHEET No.	TOTAL SHEETS
11	SD	94,188	30.0/39.0 0.2/1.9	8	20

REGISTERED CIVIL ENGINEER 01-25-13 DATE

02-25-13
PLANS APPROVAL DATE

REGISTERED PROFESSIONAL ENGINEER
SHAHIN ADIBI
No. 54839
Exp. 06-30-14
CIVIL
STATE OF CALIFORNIA

THE STATE OF CALIFORNIA OR ITS OFFICERS OR AGENTS SHALL NOT BE RESPONSIBLE FOR THE ACCURACY OR COMPLETENESS OF SCANNED COPIES OF THIS PLAN SHEET.

NOTES:

1. EXACT LOCATION OF CONSTRUCTION AREA SIGNS SHALL BE DETERMINED BY THE ENGINEER.
2. FEDERAL MANUAL ON UNIFORM TRAFFIC CONTROL DEVICES (MUTCD) SIGN CODES ARE SHOWN UNLESS DESIGNATED BY (CA), INDICATING CALIFORNIA MUTCD.
3. EXISTING UTILITIES ARE NOT SHOWN ON THESE PLAN SHEETS. THE CONTRACTOR SHALL VERIFY LOCATIONS OF EXISTING UTILITIES AND ADJUST THE FIELD LOCATION OF SIGN POSTS IN CONSULTATION WITH THE ENGINEER.

LEGEND

[X] = CONSTRUCTION AREA SIGNS

CONSTRUCTION AREA SIGNS

SIGN No.	TYPE	PANEL SIZE (In)x(In)	No. OF POST AND SIZE (In)x(In)	No. OF SIGNS
1	C40 (CA)	108 X 42	2-4 X 6 (s)	3
2	C14 (CA)	48 X 24	1-4 X 4 (s)	3
3	C23 (CA)	48 X 48	1-4 X 6 (s)	19
			TOTAL	25

(s) DENOTES STATIONARY MOUNTED SIGN

TYPICAL PLACEMENT OF TRAFFIC PLASTIC DRUM

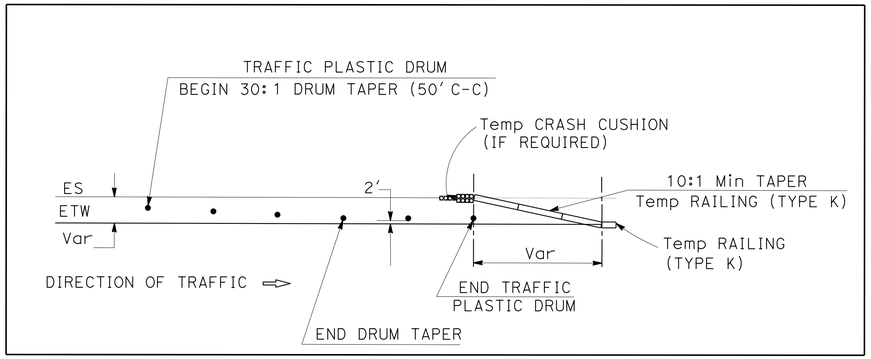

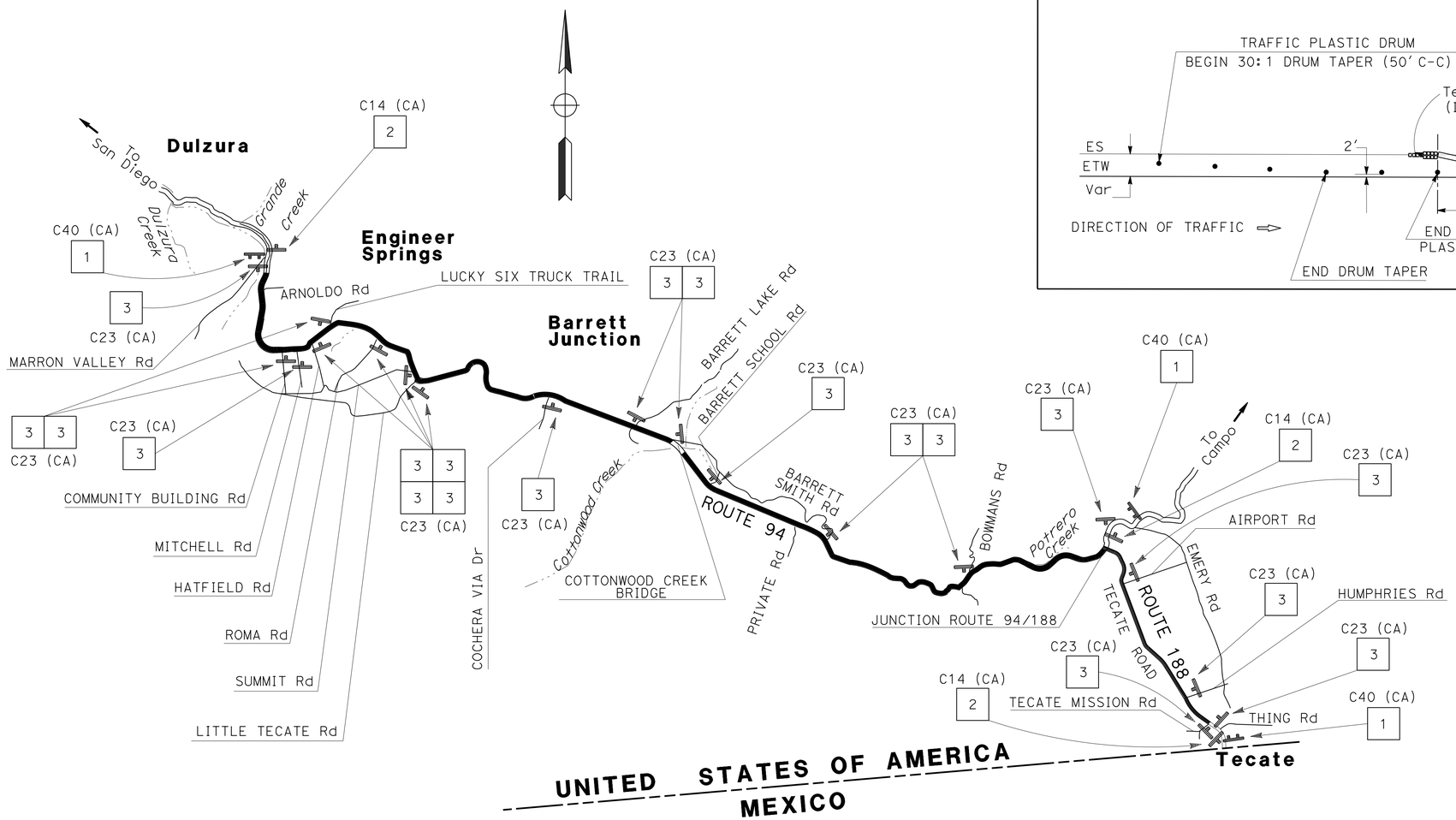

CONSTRUCTION AREA SIGNS

NO SCALE

CS-1

APPROVED FOR CONSTRUCTION AREA SIGN WORK ONLY

STATE OF CALIFORNIA - DEPARTMENT OF TRANSPORTATION
Caltrans
TRAFFIC DESIGN

FUNCTIONAL SUPERVISOR: CAMILLE ABOU-FADEL
CALCULATED-DESIGNED BY: SHAHIN ADIBI
CHECKED BY: RYAN CHAO
REVISED BY
DATE REVISED

LAST REVISION 02-04-13
DATE PLOTTED => 26-FEB-2013
TIME PLOTTED => 10:52

Dist	COUNTY	ROUTE	POST MILES TOTAL PROJECT	SHEET No.	TOTAL SHEETS
11	SD	94,188	30.0/39.0 0.2/1.9	9	20

REGISTERED CIVIL ENGINEER 01-25-13 DATE

02-25-13
PLANS APPROVAL DATE

REGISTERED PROFESSIONAL ENGINEER
SHAHIN ADIBI
No. 54839
Exp. 06-30-14
CIVIL
STATE OF CALIFORNIA

THE STATE OF CALIFORNIA OR ITS OFFICERS OR AGENTS SHALL NOT BE RESPONSIBLE FOR THE ACCURACY OR COMPLETENESS OF SCANNED COPIES OF THIS PLAN SHEET.

NOTES:
1. ALL PAVEMENT DELINEATION SHALL BE REPLACED IN KIND UNLESS INDICATED OTHERWISE.
2. NO SEPARATE ITEM FOR THE REMOVAL OF THE TRAFFIC STRIPE AND MARKINGS AT RTE 188 FROM PM 0.23 TO PM 0.6.

PAVEMENT MARKER SUMMARY / TRAFFIC STRIPE SUMMARY

ROUTE	DESCRIPTION	POSTMILE	DETAIL	NON-REFLECTIVE (EA)	RETROREFLECTIVE (EA)			PAINT (LF)	THERMOPLASTIC (LF) (ENHANCED WET NIGHT VISIBILITY)					REMARKS
									4"	6"	8"	4"	4"	
				TYPE A	TYPE D	TYPE G	TYPE H	(1-COAT)	BROKEN	SOLID	SOLID	SOLID	BROKEN	
				WHITE	YELLOW	CLEAR	YELLOW		36-12				17-7	
94	EB	30.0/39.0	6		66				3114					
			9			55							2586	
			19		68		135		3222					
			22		3278			39,337*				78,674		L = 39,337′
			27B(Mod)(6")							46,988				
			29		24			524*				1048		L = 262′
			32		53			240*	952					L = 476′
			38			67					1585			
	WB	39.0/30.0	12			37			1742					
			27B(Mod)(6")							46,988				
			38			21					476			
			HATCHING	187										
188	NB	0.23/1.90	6		13				565					
			19		53				2480					
			22		526			6,287*				12,574		L = 6,287′
			27B									8767		
			38A								50			
	SB	1.90/0.23	27B									8767		
			TOTAL	187	4396			46,388*	12,075	93,976	2111	109,830	2586	

* = BLACK PAINTED TRAFFIC STRIPE

REMOVE PAVEMENT MARKERS (N)

ROUTE	DESCRIPTION	POSTMILE	NON-REFLECTIVE (EA)	RETROREFLECTIVE (EA)
			TYPE A	TYPE D, G, H
94	EB/WB	30.0/39.0	187	3804
188	NB/SB	0.23/1.90	0	592
		TOTAL	187	4396

(N) - NOT A SEPARATE PAY ITEM, FOR INFORMATION ONLY.

PAVEMENT DELINEATION QUANTITIES

PDQ-1

REVISED BY | DATE REVISED
RYAN CHAO | SHAHIN ADIBI
CALCULATED-DESIGNED BY | CHECKED BY
FUNCTIONAL SUPERVISOR | CAMILLE ABOU-FADEL
STATE OF CALIFORNIA - DEPARTMENT OF TRANSPORTATION
Caltrans® TRAFFIC DESIGN

LAST REVISION 02-04-13 | DATE PLOTTED => 26-FEB-2013 | TIME PLOTTED => 10:52

Dist	COUNTY	ROUTE	POST MILES TOTAL PROJECT	SHEET No.	TOTAL SHEETS
11	SD	94,188	30.0/39.0 0.2/1.9	10	20

REGISTERED CIVIL ENGINEER 01-25-13 DATE

02-25-13
PLANS APPROVAL DATE

REGISTERED PROFESSIONAL ENGINEER
SHAHIN ADIBI
No. 54839
Exp. 06-30-14
CIVIL
STATE OF CALIFORNIA

THE STATE OF CALIFORNIA OR ITS OFFICERS OR AGENTS SHALL NOT BE RESPONSIBLE FOR THE ACCURACY OR COMPLETENESS OF SCANNED COPIES OF THIS PLAN SHEET.

NOTES:
1. ALL PAVEMENT DELINEATION SHALL BE REPLACED IN KIND UNLESS INDICATED OTHERWISE.
2. NO SEPARATE ITEM FOR THE REMOVAL OF THE TRAFFIC STRIPE AND MARKINGS AT RTE 188 FROM PM 0.23 TO PM 0.6.

THERMOPLASTIC PAVEMENT MARKING (ENHANCED WET NIGHT VISIBILITY)

Rte	DIRECTION	POSTMILE	TYPE III (L) SQFT	TYPE VI SQFT	AHEAD SQFT	STOP SQFT	12" LIMIT LINE SQFT
94	EB	30.0/39.0	252	126			
94	WB	30.0/39.0	84	126			
188	NB	0.23/1.90			62	88	54
		SUB-TOTAL	336	252	62	88	54
		TOTAL	792				

REMOVE PAINTED TRAFFIC STRIPE

ROUTE	POSTMILE BEGIN	POSTMILE END	DETAIL/TYPE	LF
94	30.0	39.0	6, 9, 19, 22, 27B, 29, 32, 12	180,647
188	0.60*	1.90	6, 19, 22, 27B	25,668
			TOTAL	206,315

* PM 0.23 TO 0.60 WILL BE COLDPLANED

REMOVE THERMOPLASTIC TRAFFIC STRIPE

ROUTE	POSTMILE BEGIN	POSTMILE END	DETAIL/TYPE	LF
94	30.0	39.0	38	4122
188	0.23	1.90	38A	100
			TOTAL	4222

REMOVE THERMOPLASTIC PAVEMENT MARKING

ROUTE	POSTMILE BEGIN	POSTMILE END	DETAIL/TYPE	SQFT
94	30.0	39.0	ARROW (TYPE III(L)); ARROW (TYPE VI)	588
188	0.23	1.90	AHEAD; STOP; 12" LIMIT LINE	204
			TOTAL	792

DETAIL 27B (6") Mod

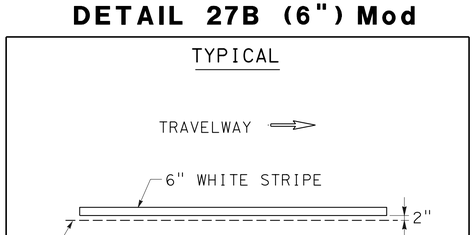

PAVEMENT DELINEATION QUANTITIES

PDQ-2

REVISED BY	DATE REVISED
RYAN CHAO	SHAHIN ADIBI
CALCULATED-DESIGNED BY	CHECKED BY
FUNCTIONAL SUPERVISOR	CAMILLE ABOU-FADEL

STATE OF CALIFORNIA - DEPARTMENT OF TRANSPORTATION
Caltrans TRAFFIC DESIGN

LAST REVISION 02-04-13 | DATE PLOTTED => 26-FEB-2013 | TIME PLOTTED => 10:52

Dist	COUNTY	ROUTE	POST MILES TOTAL PROJECT	SHEET No.	TOTAL SHEETS
11	SD	94,188	30.0/39.0 0.2/1.9	11	20

Hamed S. Baha 01-28-13
REGISTERED CIVIL ENGINEER DATE

02-25-13
PLANS APPROVAL DATE

REGISTERED PROFESSIONAL ENGINEER
HAMED S. BAHA
No. 74499
Exp. 12-31-13
CIVIL
STATE OF CALIFORNIA

THE STATE OF CALIFORNIA OR ITS OFFICERS OR AGENTS SHALL NOT BE RESPONSIBLE FOR THE ACCURACY OR COMPLETENESS OF SCANNED COPIES OF THIS PLAN SHEET.

ROADWAY QUANTITIES

LOCATION			LENGTH	TRAVELED WAY WIDTH	Shld	PAVED AREA		COLD PLANE	TACK COAT	HMA (TYPE C)	SLURRY SEAL (TYPE III)	DESCRIPTION
Rte	BEGIN PM	END PM	LF [N]	LF [N]	LF [N]	SQFT[N]	SQYD[N]	SQYD	TON	TON	TON	
Rte 94	30.00	30.10	502	48	20	34,136	3,793				55	
	30.10	30.18	459	26	10	16,524	1,836				26	
	30.18	30.24	328	24	10	11,152	1,239				18	
	30.24	31.36	5,873	24	2	152,698	16,314				244	
	31.36	31.47	623	24	10	21,182	2,284				34	
	31.47	31.64	885	24	2	23,010	2,458				37	
	31.64	31.75	558	24	4	15,624	1,674				25	
	31.75	32.00	1,310	24	2	34,060	3,639				54	
	32.00	32.49	2,625	24	20	115,500	12,542				184	
	32.49	32.70	1,115	24	2	28,990	3,097				46	
	32.70	33.46	3,970	24	20	174,680	18,968				279	
	33.46	33.92	2,427	36	10	111,642	12,135				178	
	33.92	34.36	2,330	24	2	60,580	6,472				97	
	34.36	34.69	1,739	26	2	48,692	5,217				78	
	34.69	34.95	1,410	24	2	36,660	3,917				59	
COTTON BRIDGE												NO WORK ON BRIDGE
	35.05	38.26	16,950	24	2	440,700	47,083				704	
	38.26	38.34	422	24	20	18,568	2,016				30	
	38.34	38.45	581	36	11	27,307	2,970				44	
	38.45	38.72	1,427	24	20	62,788	6,818				100	
Rte 94	38.72	39.00	1,480	24	2	38,480	4,111				61	
Rte 188	0.23	0.60	1,953	24	8	62,496	6,944	6,944	2.89	673		THICKNESS = 0.15'
Rte 188	0.60	1.85	2,012	24	2.6	175,560	19,507				280	
									0.11	29		SHOULDER PAD UNDER HMA DIKE (HMA TYPE C)
							TOTAL	6,944	3.00	702	2,663	

ASPHALTIC EMULSION (FOG SEAL COAT)

DESCRIPTION	TON	
	Rte 94	Rte 188
AC DIKE AND HMA DIKE	2.05	0.55
OVERSIDE DRAIN/DROP INLET	0.03	
Misc AREA/HIGH SIDE DITCH	0.67	0.11
CENTERLINE RUMBLE STRIP	2.18	0.40
Lt/Rt SHOULDERS (PM 0.23-0.60)		0.72
TOTAL	6.71	

DIKE QUANTITIES

LOCATION			REMOVE AC DIKE		PLACE HMA DIKE (LF)		MINOR HMA	Shld PAD UNDER HMA DIKE	REMARKS
Rte	Beg PM	END PM	TYPE	LF	TYPE D	TYPE E	TON	HMA (TYPE C) TON	
SB 188	0.24	0.28	A	211		211	5.4	2	
NB 188	0.23	0.44	A	1108		1108	28.4	16	
NB 188	0.46	0.55	D	475	475		26.5	11	
SUB-TOTALS				1794	475	1319	0.24	29*	
TOTALS				1794	475	1319	60.3		

*: QUANTITY ADDED TO ROADWAY QUANTITIES TABLE.

SUMMARY OF QUANTITIES
Q-1

STATE OF CALIFORNIA - DEPARTMENT OF TRANSPORTATION
Caltrans
MAINTENANCE

FUNCTIONAL SUPERVISOR: ALBERTO GAYON
CALCULATED-DESIGNED BY: HAMED BAHA
CHECKED BY: REBECCA IGNACIO
REVISED BY
DATE REVISED

LAST REVISION 02-04-13
DATE PLOTTED => 26-FEB-2013
TIME PLOTTED => 10:52

Dist	COUNTY	ROUTE	POST MILES TOTAL PROJECT	SHEET No.	TOTAL SHEETS
11	SD	94,188	30.0/39.0 0.2/1.9	12	20

Hamed S. Baha 01-28-13
REGISTERED CIVIL ENGINEER DATE

02-25-13
PLANS APPROVAL DATE

REGISTERED PROFESSIONAL ENGINEER
HAMED S. BAHA
No. 74499
Exp. 12-31-13
CIVIL
STATE OF CALIFORNIA

THE STATE OF CALIFORNIA OR ITS OFFICERS OR AGENTS SHALL NOT BE RESPONSIBLE FOR THE ACCURACY OR COMPLETENESS OF SCANNED COPIES OF THIS PLAN SHEET.

IMPORTED BORROW

ROUTE	Dir	FROM PM	End PM	LENGTH (LF) (N)	WIDTH (LF) (N)	DEPTH (LF) (N)	QUANTITY (CY) (N)	QUANTITY (TON)	REMARKS
94	EB	38.9		10	4	0.33	0.49	0.86	SHOULDER REPAIR
188	SB	0.6		60	5	0.50	5.56	9.73	SHOULDER REPAIR
188	NB	0.23	0.44	1214	2	0.10	9.00	15.75	HMA DIKE BACKFILL
							TOTAL	26.34	

Dir = DIRECTION

CENTERLINE RUMBLE STRIP (HMA, GROUND-IN INDENTATIONS)

LOCATION			DETAIL 22 (LF)(N)	DETAIL 29 (LF)(N)	(Sta)
ROUTE	FROM PM	TO PM			
94	30.0	34.0	21,120		211.2
	34.3	34.6		3,168	31.7
	34.6	35.0	2,112		21.1
	35.4	35.5	528		5.3
	36.1	39.0	15,312		153.1
188	0.2	1.9	8,976		89.8
				TOTAL	512.2

SUMMARY OF QUANTITIES
Q-2

REVISED BY | DATE REVISED
HAMED BAHA | REBECCA IGNACIO
CALCULATED-DESIGNED BY | CHECKED BY
FUNCTIONAL SUPERVISOR
ALBERTO GAYON
STATE OF CALIFORNIA - DEPARTMENT OF TRANSPORTATION
Caltrans
MAINTENANCE

LAST REVISION 02-04-13 | DATE PLOTTED => 26-FEB-2013 | TIME PLOTTED => 10:52

Dist	COUNTY	ROUTE	POST MILES TOTAL PROJECT	SHEET No.	TOTAL SHEETS
11	SD	94,188	30.0/39.0 0.2/1.9	13	20

REGISTERED CIVIL ENGINEER 12-7-12 DATE

02-25-13
PLANS APPROVAL DATE

REGISTERED PROFESSIONAL ENGINEER Gurinderpal Bhullar No. C48815 Exp. 9-30-14 CIVIL STATE OF CALIFORNIA

THE STATE OF CALIFORNIA OR ITS OFFICERS OR AGENTS SHALL NOT BE RESPONSIBLE FOR THE ACCURACY OR COMPLETENESS OF SCANNED COPIES OF THIS PLAN SHEET.

TYPICAL LANE CLOSURE

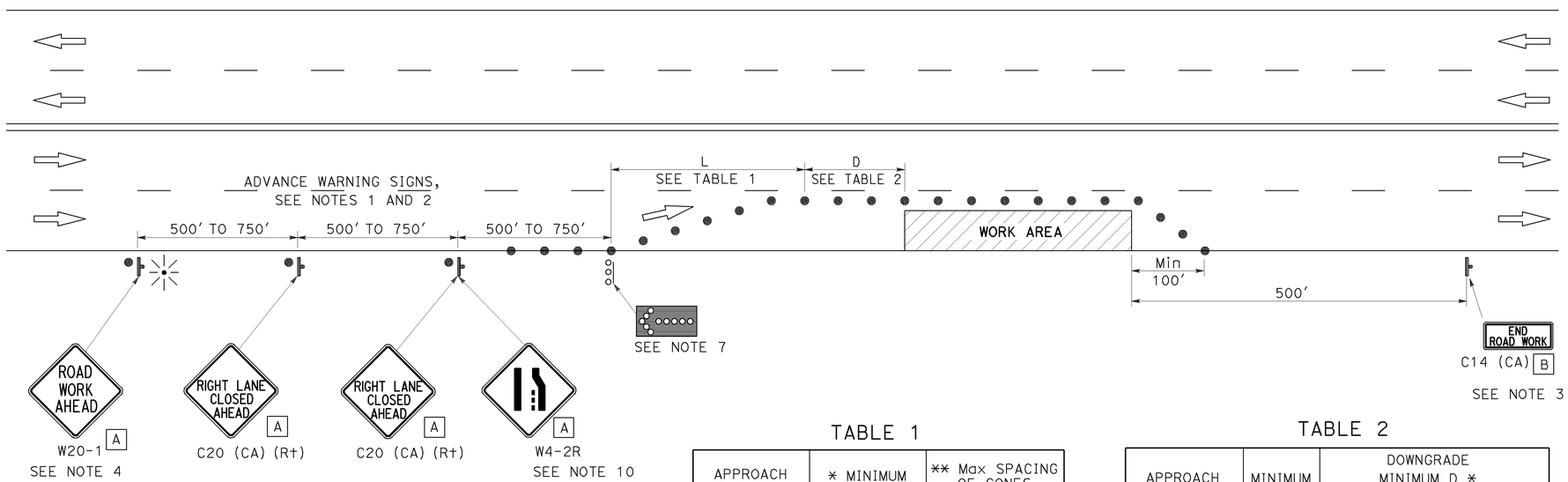

NOTES:

Unless otherwise specified in the special provisions, all temporary warning signs shall have black legend on orange background.

California code are designated by (CA). Otherwise, Federal (MUTCD) codes are shown.

LEGEND

- TRAFFIC CONE
- TEMPORARY SIGN
- FLASHING ARROW SIGN (FAS)
- FAS SUPPORT OR TRAILER
- PORTABLE FLASHING BEACON

SIGN PANEL SIZE (Min)

A 36" x 36"

B 36" x 18"

TABLE 1

APPROACH SPEED	* MINIMUM L	** Max SPACING OF CONES ALONG TAPER
mph	ft	ft
20 AND BELOW	80	20
25	125	25
30	180	30
35	245	35
40	320	40
45	540	45
50	600	50
Over 50	SEE NOTE 9	

* USE L FOR LANE WIDTHS LESS THAN OR EQUAL TO 12'.
** SEE NOTE 8.

TABLE 2

APPROACH SPEED	MINIMUM D	DOWNGRADE MINIMUM D *		
		-3%	-6%	-9%
mph	ft	ft	ft	ft
25 AND BELOW	155	158	165	173
30	200	205	215	227
35	250	257	271	287
40	305	315	333	354
45	360	378	400	427
50	425	446	474	507
OVER 50	SEE NOTE 9			

* USE ON SUSTAINED DOWNGRADE STEEPER THAN -3 PERCENT AND LONGER THAN 1 MILE.

NOTES:

1. Where approach speeds are low, advance warning signs may be placed at 300' spacing and placed closer in urban areas.
2. Each advance warning sign shall be equipped with at least two flags for daytime closure. Each flag shall be at least 16" x 16" in size and shall be orange or fluorescent red-orange in color. Flashing beacons shall be placed at the locations indicated for lane closure during hours of darkness.
3. A C14 (CA) "END ROAD WORK" sign, as appropriate, shall be placed at the end of the lane closure unless the end of work area is obvious, or ends within a larger project's limits.
4. If the W20-1 sign would follow within 2000' of a stationary W20-1 or C11 (CA) "ROAD WORK NEXT _____ MILES", use a C20 (CA) sign for the first advance warning sign.
5. All cones used for lane closures during the hours of darkness shall be fitted with retroreflective bands (or sleeves) as specified in the specifications.
6. Portable delineators, placed at one-half the spacing indicated for traffic cones, may be used instead of cones for daytime closures only.
7. Flashing arrow sign shall be either Type I or Type II.
8. The maximum spacing between cones along a tangent shall be 50' and along a taper shall be approximately as shown in Table 1.
9. For approach speeds over 50 mph, use the "Traffic Control System for Lane Closure On Freeways And Expressways" plan for lane closure details and requirements.
10. When specified in the special provisions, a W4-2 "LANE ENDS" symbol sign is to be used in place of the C20 (CA) "RIGHT LANE CLOSED AHEAD" sign.

STATE OF CALIFORNIA
DEPARTMENT OF TRANSPORTATION

TRAFFIC CONTROL SYSTEM FOR LANE CLOSURE ON MULTILANE CONVENTIONAL HIGHWAYS

NO SCALE

TCS-1

STATE OF CALIFORNIA - DEPARTMENT OF TRANSPORTATION

Caltrans

FUNCTIONAL SUPERVISOR

CALCULATED-DESIGNED BY | CHECKED BY

REVISED BY | DATE REVISED

LAST REVISION 02-25-13 | DATE PLOTTED => 10-DEC-2012 | TIME PLOTTED => 09:45

Dist	COUNTY	ROUTE	POST MILES TOTAL PROJECT	SHEET No.	TOTAL SHEETS
11	SD	94,188	30.0/39.0 0.2/1.9	14	20

REGISTERED CIVIL ENGINEER 12-7-12 DATE

02-25-13
PLANS APPROVAL DATE

REGISTERED PROFESSIONAL ENGINEER Gurinderpal Bhullar No. C48815 Exp. 9-30-14 CIVIL STATE OF CALIFORNIA

THE STATE OF CALIFORNIA OR ITS OFFICERS OR AGENTS SHALL NOT BE RESPONSIBLE FOR THE ACCURACY OR COMPLETENESS OF SCANNED COPIES OF THIS PLAN SHEET.

LEGEND

- TRAFFIC CONE
- TEMPORARY SIGN
- FLASHING ARROW SIGN (FAS)
- FAS SUPPORT OR TRAILER
- PORTABLE FLASHING BEACON

TABLE 1

APPROACH SPEED	* MINIMUM L	** Max SPACING OF CONES ALONG TAPER
mph	ft	ft
20 and below	80	20
25	125	25
30	180	30
35	245	35
40	320	40
45	540	45
50	600	50
OVER 50	SEE NOTE 11	

* USE L FOR LANE WIDTHS LESS THAN OR EQUAL TO 12'.
** SEE NOTE 10.

TABLE 2

APPROACH SPEED	MINIMUM D	DOWNGRADE MINIMUM D *		
		-3%	-6%	-9%
mph	ft	ft	ft	ft
25 AND BELOW	155	158	165	173
30	200	205	215	227
35	250	257	271	287
40	305	315	333	354
45	360	378	400	427
50	425	446	474	507
OVER 50	SEE NOTE 11			

* USE ON SUSTAINED DOWNGRADE STEEPER THAN -3 PERCENT AND LONGER THAN 1 MILE.

TYPICAL CLOSING OF HALF ROADWAY

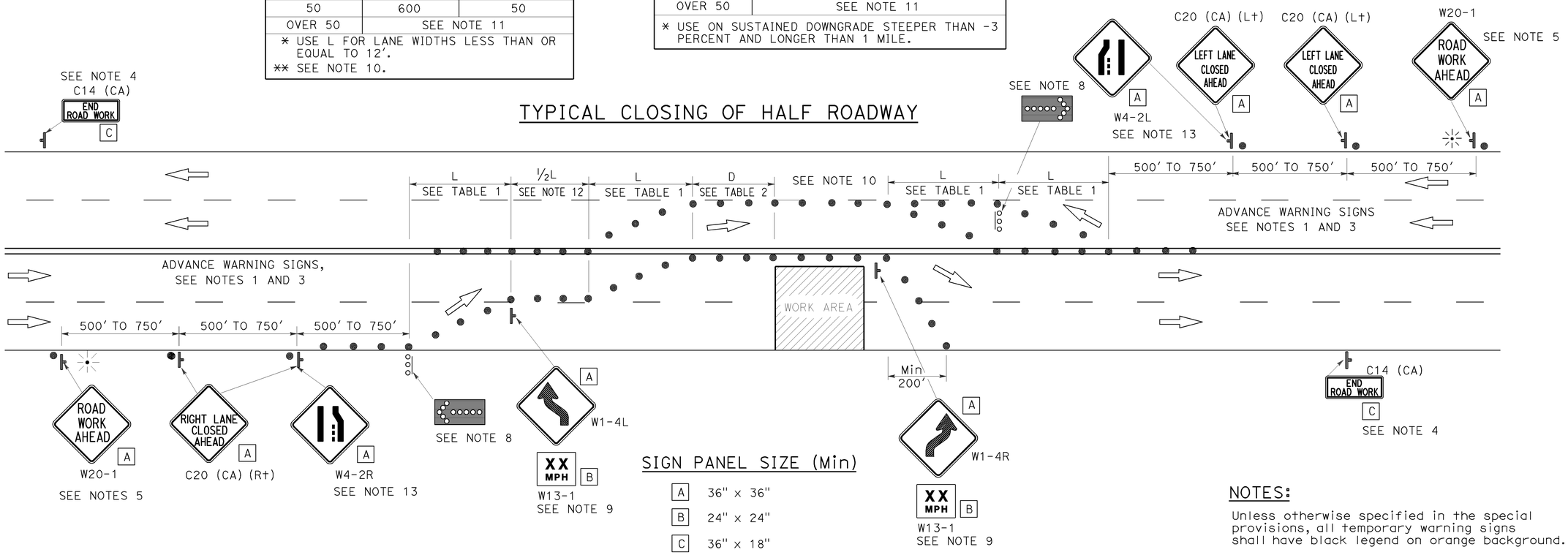

SIGN PANEL SIZE (Min)

A	36" x 36"
B	24" x 24"
C	36" x 18"

NOTES:

Unless otherwise specified in the special provisions, all temporary warning signs shall have black legend on orange background.

California code are designated by (CA). Otherwise, Federal (MUTCD) codes are shown.

NOTES:

1. Where Approach speeds are low, advance warning signs may be placed at 300' spacing and placed closer in urban areas.
2. At least one person shall be assigned to provide full time maintenance of traffic control devices for lane closure unless, otherwise directed by the Engineer.
3. Each advance warning sign in each direction of travel shall be equipped with at least two flags for daytime closure. Each flag shall be at least 16" x 16" in size and shall be orange or fluorescent red-orange in color. Flashing beacons shall be placed at the locations indicated for lane closure during hours of darkness.
4. A C14 (CA) "END ROAD WORK" sign, as appropriate, shall be placed at the end of the lane closure unless the end of work area is obvious, or ends within a larger project's limits.
5. If the W20-1 sign would follow within 2000' of a stationary W20-1 or C11 (CA) "ROAD WORK NEXT _____ MILES", use a C20 (CA) sign for the first advance warning sign.
6. All cones used for lane closures during the hours of darkness shall be fitted with retroreflective bands (or sleeves) as specified in the specifications.
7. Portable delineators, placed at one-half the spacing indicated for traffic cones, may be used instead of cones for daytime closures only.
8. Flashing arrow signs shall be either Type I or Type II.
9. Advisory speed will be determined by the Engineer. The W13-1 Sign will not be required when advisory speed is more than the posted or maximum speed limit.
10. The maximum spacing between cones along a tangent shall be 50' and along a taper shall be approximately as shown in Table 1.
11. For approach speeds over 50 mph, use the "Traffic Control System For Lane Closure On Freeways And Expressways" plan for lane closure details and requirements.
12. Unless otherwise specified in the special provisions, the (½ L) shown between the two (L) lane closure tapers shall be used.
13. When specified in the special provisions, a W4-2 "Lane Ends" symbol sign is to be used in place of the C20 (CA) "RIGHT (LEFT) LANE CLOSED AHEAD" sign.

STATE OF CALIFORNIA
DEPARTMENT OF TRANSPORTATION

TRAFFIC CONTROL SYSTEM FOR LANE CLOSURE ON MULTILANE CONVENTIONAL HIGHWAYS

NO SCALE

TCS-2

STATE OF CALIFORNIA - DEPARTMENT OF TRANSPORTATION
Caltrans

FUNCTIONAL SUPERVISOR | CALCULATED-DESIGNED BY | CHECKED BY | REVISED BY | DATE REVISED

LAST REVISION 02-25-13 | DATE PLOTTED => 10-DEC-2012 | TIME PLOTTED => 09:45

Dist	COUNTY	ROUTE	POST MILES TOTAL PROJECT	SHEET No.	TOTAL SHEETS
11	SD	94,188	30.0/39.0 0.2/1.9	15	20

REGISTERED CIVIL ENGINEER 12-7-12 DATE

02-25-13
PLANS APPROVAL DATE

REGISTERED PROFESSIONAL ENGINEER Gurinderpal Bhullar No. C48815 Exp 9-30-14 CIVIL STATE OF CALIFORNIA

THE STATE OF CALIFORNIA OR ITS OFFICERS OR AGENTS SHALL NOT BE RESPONSIBLE FOR THE ACCURACY OR COMPLETENESS OF SCANNED COPIES OF THIS PLAN SHEET.

NOTES:

Unless otherwise specified in the special provisions, all temporary warning signs shall have black legend on orange background.

California code are designated by (CA). Otherwise, Federal (MUTCD) codes are shown.

TYPICAL LANE CLOSURE WITH REVERSIBLE CONTROL

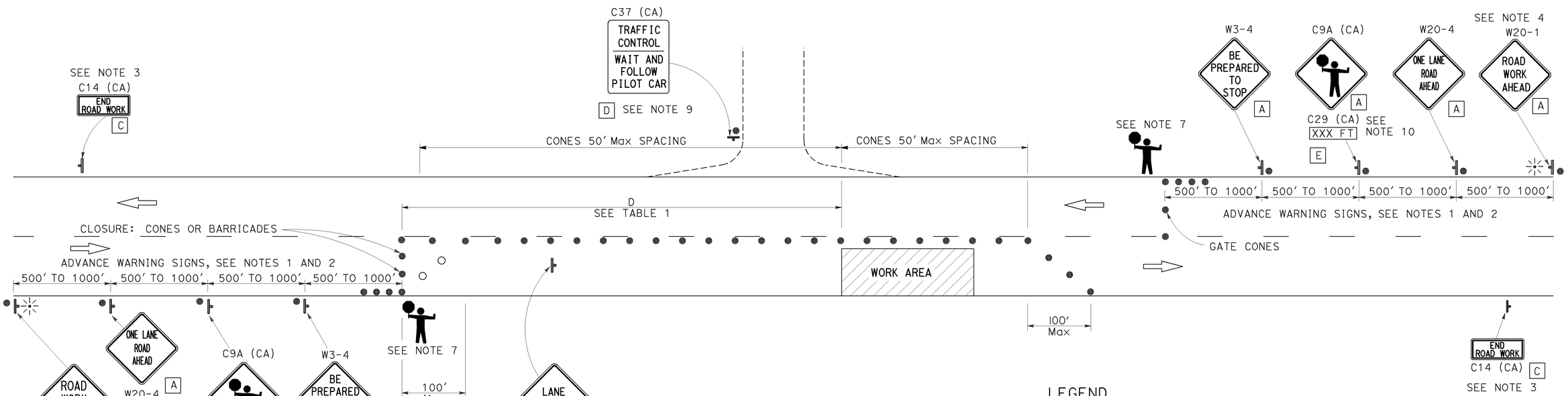

SIGN PANEL SIZE (MINIMUM)

- A — 48" x 48" - SPEED OF 45 mph OR MORE; 36" x 36" - SPEED LESS THAN 45 mph
- B — 30" x 30"
- C — 36" x 18"
- D — 36" x 42"
- E — 36" x 9"

LEGEND

- TRAFFIC CONE
- TRAFFIC CONE (OPTIONAL TAPER)
- TEMPORARY SIGN
- PORTABLE FLASHING BEACON
- FLAGGER

TABLE 1

APPROACH SPEED	MINIMUM D	DOWNGRADE MINIMUM D *		
		-3%	-6%	-9%
mph	ft	ft	ft	ft
25 AND BELOW	155	158	165	173
30	200	205	215	227
35	250	257	271	287
40	305	315	333	354
45	360	378	400	427
50	425	446	474	507
55	495	520	553	593
60	570	598	638	686
65	645	682	728	785

* USE ON SUSTAINED DOWNGRADE STEEPER THAN -3 PERCENT AND LONGER THAN 1 MILE.

NOTES:

1. Where approach speeds are low, advance warning signs may be placed at 300' spacing, and closer in urban areas.
2. Each advance warning sign in each direction of travel shall be equipped with at least two flags for daytime closure. Each flag shall be at least 16" x 16" in size and shall be orange or fluorescent red-orange in color. Flashing beacons shall be placed at the locations indicated for lane closure during hours of darkness.
3. A C14 (CA) "END ROAD WORK" sign, as appropriate, shall be placed at the end of the lane control unless the end of work area is obvious, or ends within a larger project's limits.
4. If the W20-1 sign would follow within 2000' of a stationary W20-1 or C11 (CA) "ROAD WORK NEXT _____MILES", use a W20-4 sign for the first advance warning sign.
5. All cones used for lane closures during the hours of darkness shall be fitted with retroreflective bands (or sleeves) as specified in the specifications.
6. Portable delineators, placed at one-half the spacing indicated for traffic cones, may be used instead of cones for daytime closures only.
7. Additional advance flaggers may be required. Flagger should stand in a conspicuous place, be visible to approaching traffic as well as approaching vehicles after the first vehicle has stopped. During the hours of darkness, the flagging-station and flagger shall be illuminated and clearly visible to approaching traffic. The illumination footprint of the lighting on the ground shall be at least 20' in diameter. Place a minimum of four cones at 50' intervals in advance of flagger station as shown.
8. Place C30 (CA) "LANE CLOSED" sign at 500' to 1000' intervals throughout extended work areas. They are optional if the work area is visible from the flagger station.
9. When a pilot car is used, place a C37 (CA) "TRAFFIC CONTROL-WAIT AND FOLLOW PILOT CAR" sign at all intersections within traffic control area. Signs shall be clean and visible at all times.
10. An optional C29 (CA) sign may be placed below the C9A (CA) sign.
11. Traffic cones or barricades may be placed on the optional taper as shown, barricades shall be Type I, II, or III.

STATE OF CALIFORNIA
DEPARTMENT OF TRANSPORTATION

TRAFFIC CONTROL SYSTEM FOR LANE CLOSURE ON TWO LANE CONVENTIONAL HIGHWAYS

NO SCALE

TCS-3

STATE OF CALIFORNIA - DEPARTMENT OF TRANSPORTATION
Caltrans
FUNCTIONAL SUPERVISOR
CALCULATED-DESIGNED BY
CHECKED BY
REVISED BY
DATE REVISED

LAST REVISION 02-25-13
DATE PLOTTED => 10-DEC-2012
TIME PLOTTED => 09:45

Dist	COUNTY	ROUTE	POST MILES TOTAL PROJECT	SHEET No.	TOTAL SHEETS
11	SD	94,188	30.0/39.0 0.2/1.9	16	20

REGISTERED CIVIL ENGINEER 12-7-12 DATE

02-25-13
PLANS APPROVAL DATE

REGISTERED PROFESSIONAL ENGINEER Gurinderpal Bhullar No. C48815 Exp. 9-30-14 CIVIL STATE OF CALIFORNIA

THE STATE OF CALIFORNIA OR ITS OFFICERS OR AGENTS SHALL NOT BE RESPONSIBLE FOR THE ACCURACY OR COMPLETENESS OF SCANNED COPIES OF THIS PLAN SHEET.

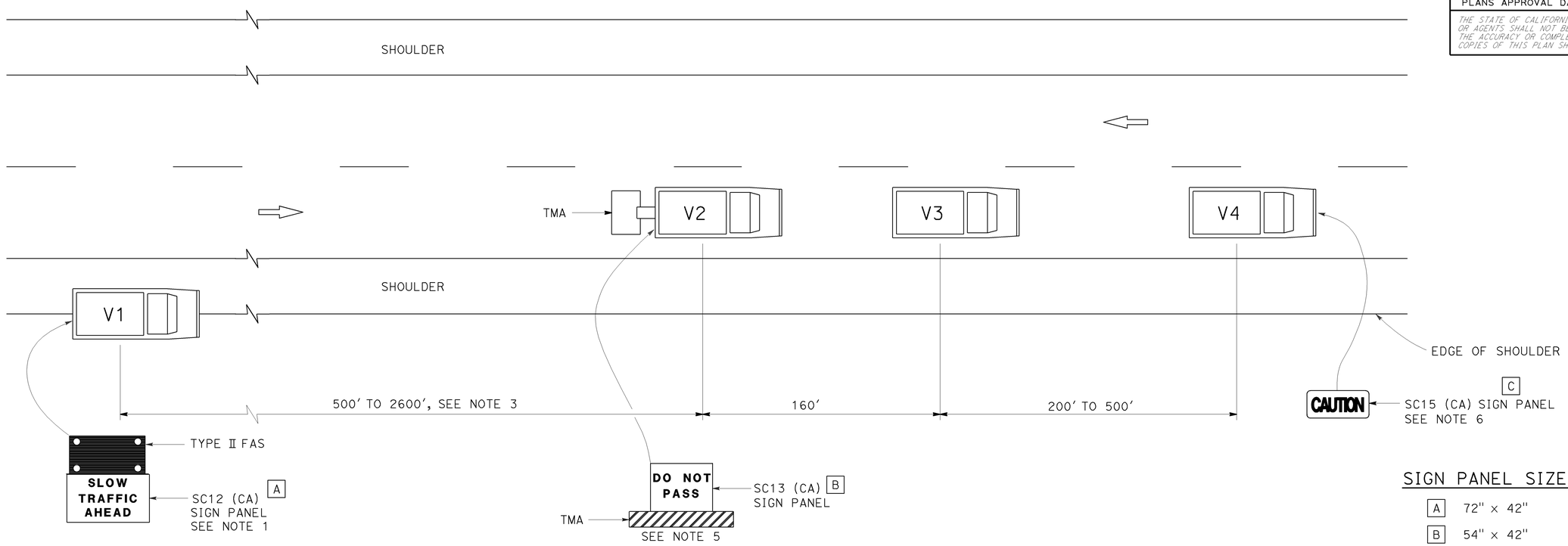

SIGN PANEL SIZE (Min)

A	72" × 42"
B	54" × 42"
C	54" × 24"

LEGEND

V1	SIGN VEHICLE
V2	SHADOW VEHICLE
V3	WORK/APPLICATION VEHICLE
V4	SIGN VEHICLE
TMA	TRUCK-MOUNTED ATTENUATOR
	FLASHING ARROW SIGN (FAS) IN FLASHING CAUTION MODE

NOTES:

1. Either a changeable message sign or a SC12 (CA) "SLOW TRAFFIC AHEAD" sign shall be mounted on the rear of sign vehicle V1. A Type II flashing arrow sign may be used with the SC12 (CA) sign panel.
2. Sign vehicle V1 should be positioned where highly visible when shoulders are not available.
3. If traffic queues develop, sign vehicle V1 should be positioned upstream from the end of queue.
4. Vehicle-mounted sign panels shall be Type III, IV VII, VIII or IX retroreflective sheeting, black on white, black on orange, or black on fluorescent orange, with 6" minimum series D letters per Caltrans sign specifications.
5. Gross Vehicle Weight of shadow vehicle shall be a minimum of 20,000 pounds and shall be equipped with a truck-mounted attenuator. The sign panel shown shall be mounted on the rear of shadow vehicle V2. The message "LANE CLOSED" may be used in place of the "DO NOT PASS" message.
6. The sign panel shown shall be mounted on the front of sign vehicle V4, facing opposing traffic.
7. All vehicles shall be equipped with flashing or rotating amber lights.
8. Sign vehicle V4 will not be required when the work and vehicles V2 and V3 are 2' or more from the centerline of the highway during the work or application operations.
9. All vehicles used for lane closures shall be equipped with two-way radios and the vehicle operators shall maintain communication during the work or application operation.
10. When multiple work vehicles are used in close proximity to each other, only one shadow vehicle is required and spacing between work vehicles shall be minimized in order to deter traffic from entering the closed lane.

STATE OF CALIFORNIA
DEPARTMENT OF TRANSPORTATION

TRAFFIC CONTROL SYSTEM FOR MOVING LANE CLOSURE ON TWO LANE HIGHWAYS

NO SCALE

TCS-4

STATE OF CALIFORNIA - DEPARTMENT OF TRANSPORTATION
Caltrans

FUNCTIONAL SUPERVISOR
CALCULATED-DESIGNED BY
CHECKED BY
REVISED BY
DATE REVISED

LAST REVISION 02-25-13
DATE PLOTTED => 10-DEC-2012
TIME PLOTTED => 09:45

Dist	COUNTY	ROUTE	POST MILES TOTAL PROJECT	SHEET No.	TOTAL SHEETS
11	SD	94,188	30.0/39.0 0.2/1.9	17	20

REGISTERED CIVIL ENGINEER

April 20, 2012
PLANS APPROVAL DATE

REGISTERED PROFESSIONAL ENGINEER
Roberta L. McLaughlin
No. C40375
Exp. 3-31-13
CIVIL
STATE OF CALIFORNIA

THE STATE OF CALIFORNIA OR ITS OFFICERS OR AGENTS SHALL NOT BE RESPONSIBLE FOR THE ACCURACY OR COMPLETENESS OF SCANNED COPIES OF THIS PLAN SHEET.

TO ACCOMPANY PLANS DATED 02-25-13

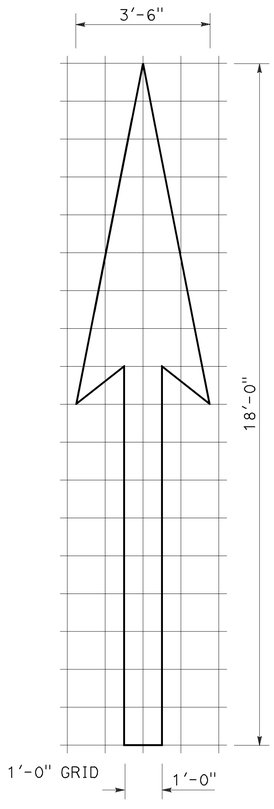

A=25 ft^2

TYPE I 18'-0" ARROW

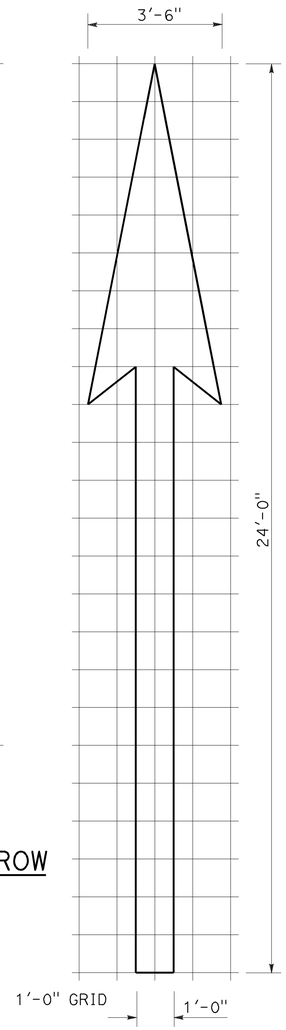

A=31 ft^2

TYPE I 24'-0" ARROW

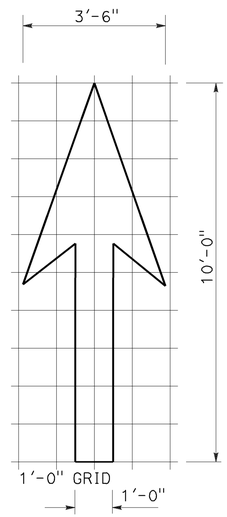

A=14 ft^2

TYPE I 10'-0" ARROW

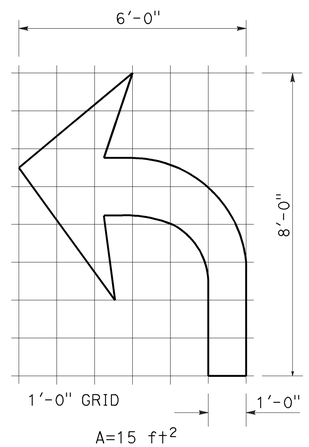

A=15 ft^2

TYPE IV (L) ARROW

(For Type IV (R) arrow, use mirror image)

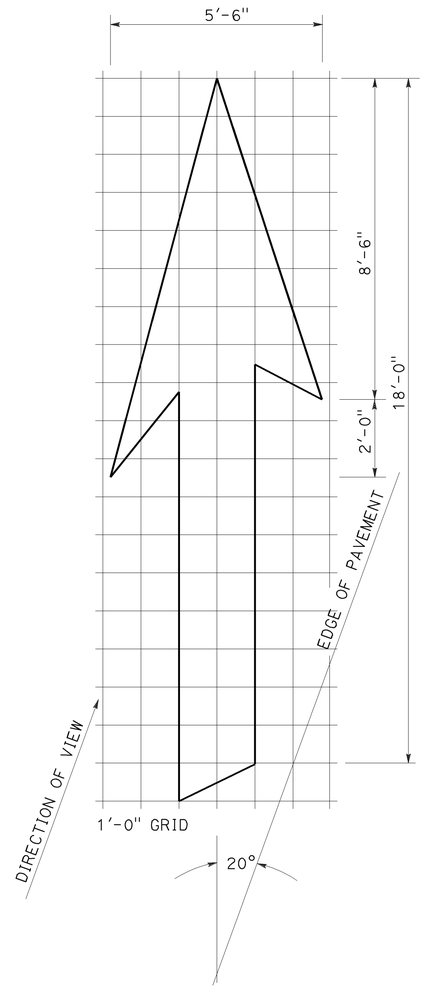

A=42 ft^2

TYPE VI ARROW

Right lane drop arrow
(For left lane, use mirror image)

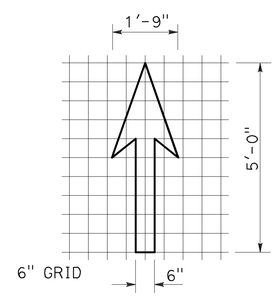

A=3.5 ft^2

BIKE LANE ARROW

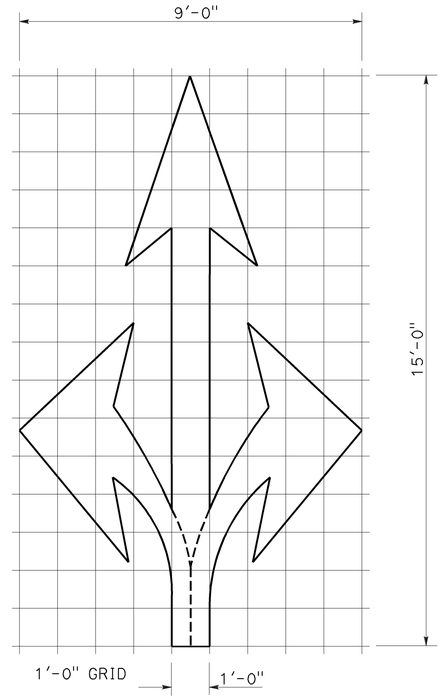

A=36 ft^2

TYPE VIII ARROW

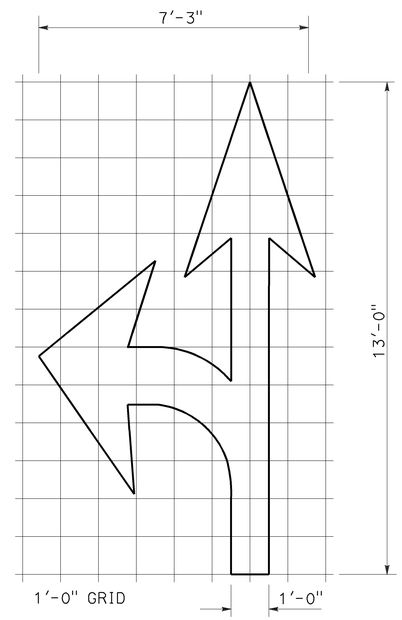

A=27 ft^2

TYPE VII (L) ARROW

(For Type VII (R) arrow, use mirror image)

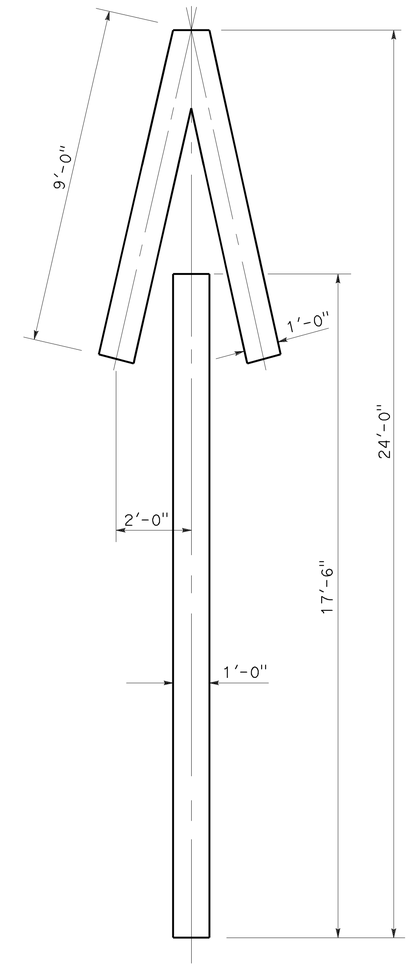

A=33 ft^2

TYPE V ARROW

NOTE:
Minor variations in dimensions may be accepted by the Engineer.

STATE OF CALIFORNIA
DEPARTMENT OF TRANSPORTATION

PAVEMENT MARKINGS ARROWS

NO SCALE

RSP A24A DATED APRIL 20, 2012 SUPERSEDES STANDARD PLAN A24A DATED MAY 20, 2011 - PAGE 13 OF THE STANDARD PLANS BOOK DATED 2010.

REVISED STANDARD PLAN RSP A24A

2010 REVISED STANDARD PLAN RSP A24A

3-14-12

Dist	COUNTY	ROUTE	POST MILES TOTAL PROJECT	SHEET No.	TOTAL SHEETS
11	SD	94,188	30.0/39.0 0.2/1.9	18	20

REGISTERED CIVIL ENGINEER

July 20, 2012
PLANS APPROVAL DATE

REGISTERED PROFESSIONAL ENGINEER
Roberta L. McLaughlin
No. C40375
Exp. 3-31-13
CIVIL
STATE OF CALIFORNIA

THE STATE OF CALIFORNIA OR ITS OFFICERS OR AGENTS SHALL NOT BE RESPONSIBLE FOR THE ACCURACY OR COMPLETENESS OF SCANNED COPIES OF THIS PLAN SHEET.

TO ACCOMPANY PLANS DATED 02-25-13

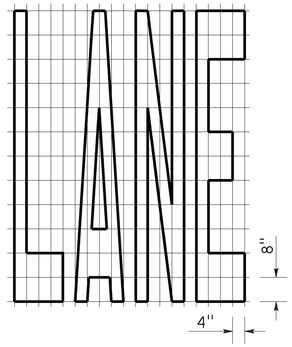

A=24 ft^2

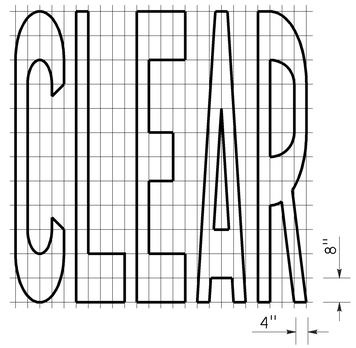

A=27 ft^2

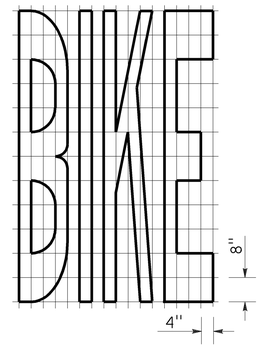

A=21 ft^2

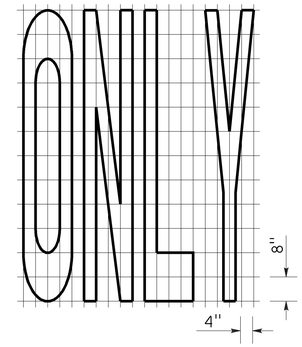

A=22 ft^2

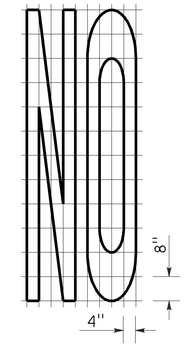

A=14 ft^2

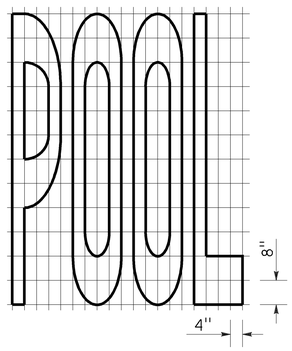

A=23 ft^2

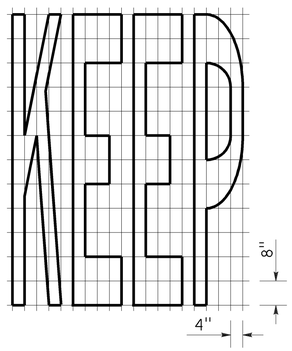

A=24 ft^2

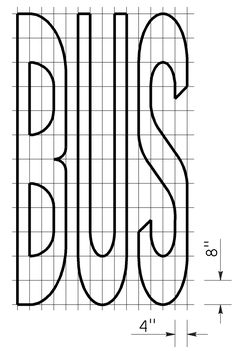

A=20 ft^2

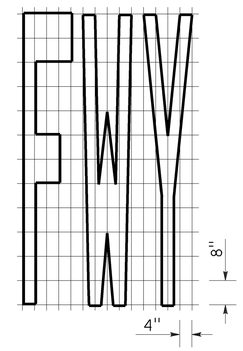

A=16 ft^2

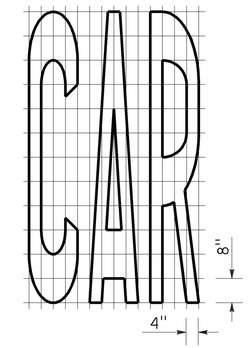

A=17 ft^2

WORD MARKINGS			
ITEM	ft^2	ITEM	ft^2
LANE	24	NO	14
POOL	23	BIKE	21
CAR	17	BUS	20
CLEAR	27	ONLY	22
KEEP	24	FWY	16

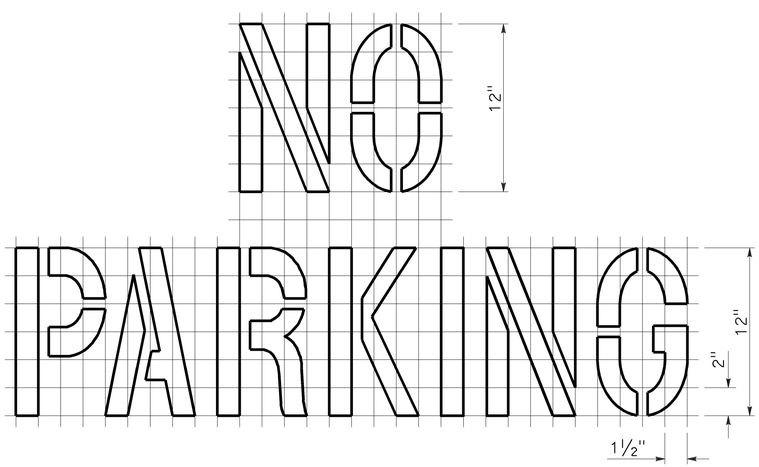

A=2 ft^2
See Notes 6 and 7

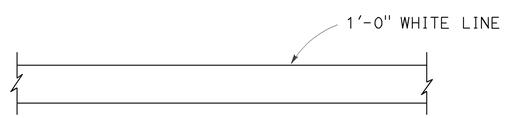

LIMIT LINE (STOP LINE)

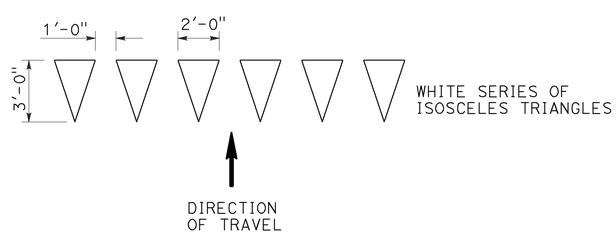

YIELD LINE

NOTES:

1. If a message consists of more than one word, it should read "UP", i.e., the first word should be nearest the driver.
2. The space between words should be at least four times the height of the characters for low speed roads, but not more than ten times the height of the characters. The space may be reduced appropriately where there is limited space because of local conditions.
3. Minor variations in dimensions may be accepted by the Engineer.
4. Portions of a letter, number or symbol may be separated by connecting segments not to exceed 2" in width.
5. The words "NO PARKING" pavement marking is to be used for parking facilities. For typical locations of markings, see Standard Plans A90A and A90B.
6. The words "NO PARKING", shall be painted in white letters no less than 1'-0" high on a contrasting background and located so that it is visible to traffic enforcement officials.

STATE OF CALIFORNIA
DEPARTMENT OF TRANSPORTATION

PAVEMENT MARKINGS WORDS, LIMIT AND YIELD LINES

NO SCALE

RSP A24E DATED JULY 20, 2012 SUPERSEDES STANDARD PLAN A24E
DATED MAY 20, 2011 - PAGE 17 OF THE STANDARD PLANS BOOK DATED 2010.

REVISED STANDARD PLAN RSP A24E

2010 REVISED STANDARD PLAN RSP A24E

6-12-12

DIST	COUNTY	ROUTE	POST MILES TOTAL PROJECT	SHEET No.	TOTAL SHEETS
11	SD	94,188	30.0/39.0 0.2/1.9	19	20

REGISTERED CIVIL ENGINEER

January 20, 2012
PLANS APPROVAL DATE

REGISTERED PROFESSIONAL ENGINEER
Cornelis M. Hakim
No. C55610
Exp. 12-31-12
CIVIL
STATE OF CALIFORNIA

THE STATE OF CALIFORNIA OR ITS OFFICERS OR AGENTS SHALL NOT BE RESPONSIBLE FOR THE ACCURACY OR COMPLETENESS OF SCANNED COPIES OF THIS PLAN SHEET.

TO ACCOMPANY PLANS DATED 02-25-13

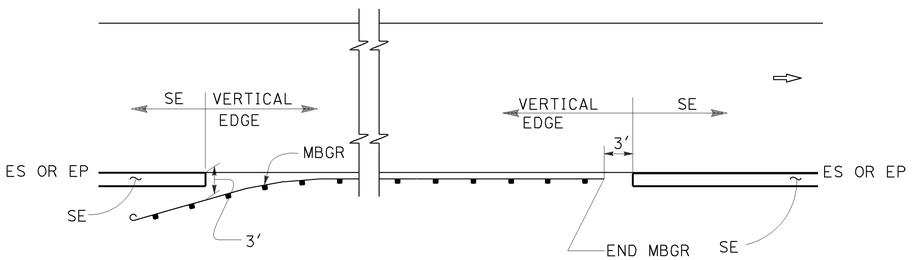

MBGR

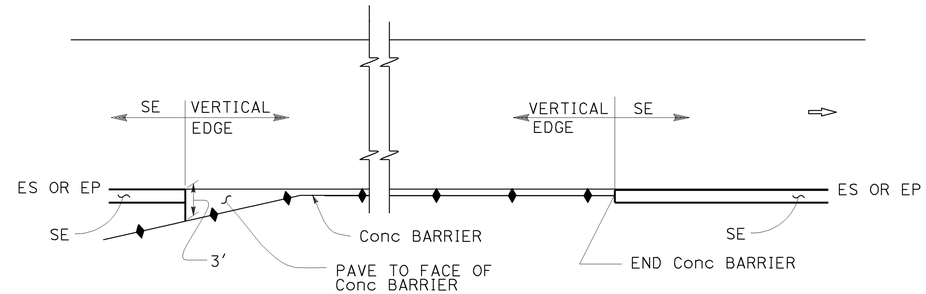

CONCRETE BARRIER

ABBREVIATIONS:

SE SAFETY EDGE

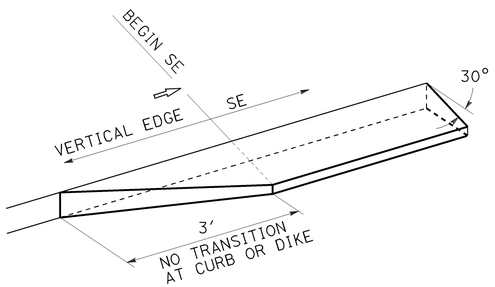

TRANSITION DETAIL
FOR CONCRETE ONLY

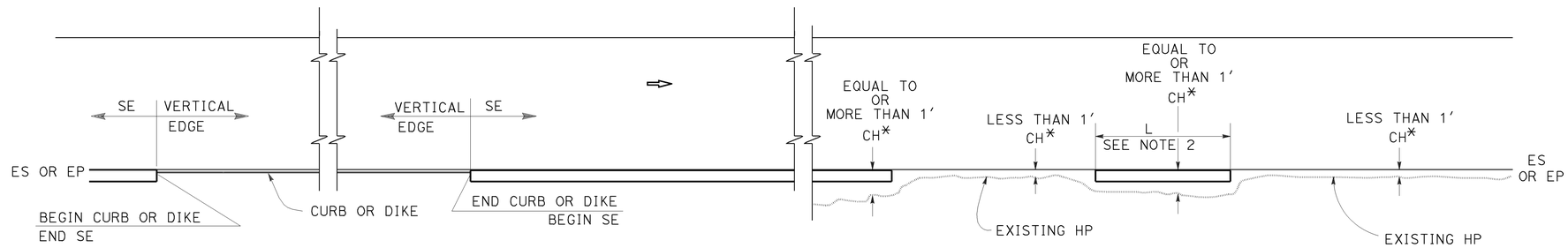

CURB OR DIKE

NARROW SIDE SLOPE

* CH = Distance from ES or EP to existing HP.

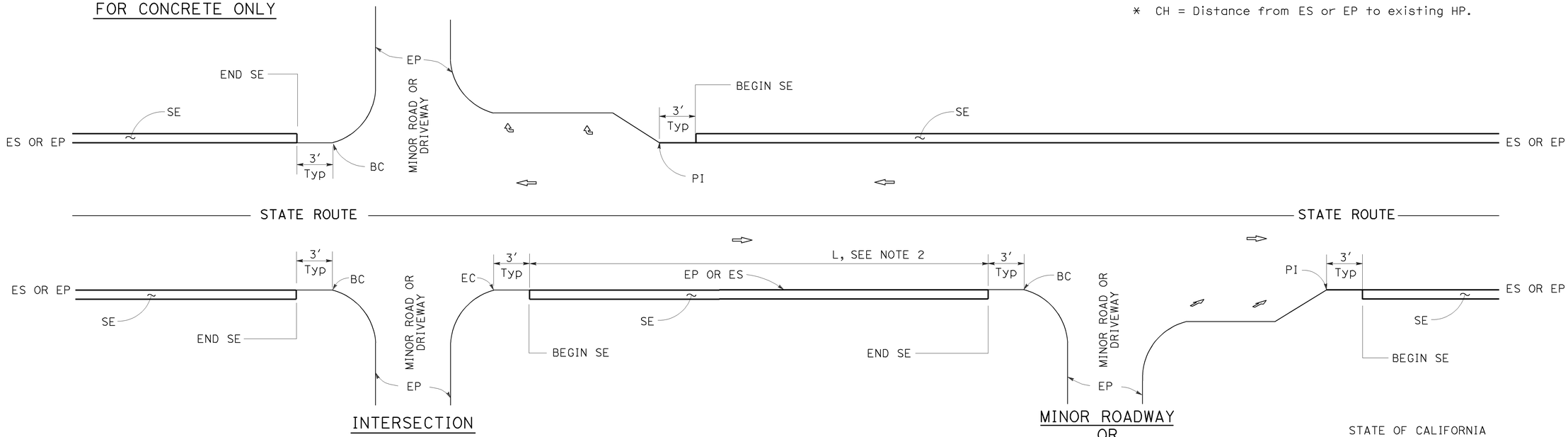

INTERSECTION

MINOR ROADWAY OR DRIVEWAY

DRIVEWAY AND INTERSECTION

NOTES:

1. For details not shown, see Revised Standard Plans RSP P75 and RSP P76.
2. Safety edge is optional when L is less than 30′.

STATE OF CALIFORNIA
DEPARTMENT OF TRANSPORTATION

PAVEMENT EDGE TREATMENTS

NO SCALE

RSP P74 DATED JANUARY 20, 2012 SUPPLEMENTS THE STANDARD PLANS BOOK DATED 2010.

REVISED STANDARD PLAN RSP P74

2010 REVISED STANDARD PLAN RSP P74

01-05-12

DIST	COUNTY	ROUTE	POST MILES TOTAL PROJECT	SHEET No.	TOTAL SHEETS
11	SD	94,188	30.0/39.0 0.2/1.9	20	20

REGISTERED CIVIL ENGINEER

January 20, 2012
PLANS APPROVAL DATE

REGISTERED PROFESSIONAL ENGINEER
Cornelis M. Hakim
No. C55610
Exp. 12-31-12
CIVIL
STATE OF CALIFORNIA

THE STATE OF CALIFORNIA OR ITS OFFICERS OR AGENTS SHALL NOT BE RESPONSIBLE FOR THE ACCURACY OR COMPLETENESS OF SCANNED COPIES OF THIS PLAN SHEET.

TO ACCOMPANY PLANS DATED 02-25-13

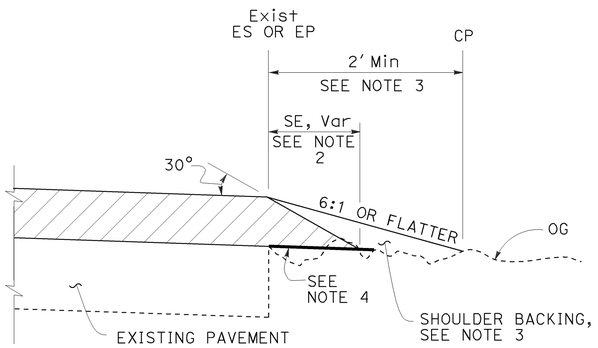

CASE A
Safety Edge

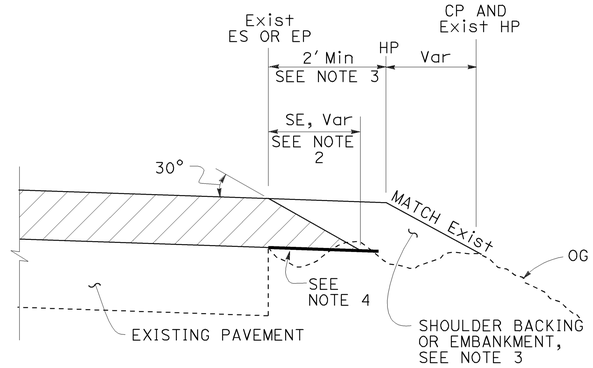

CASE B
Safety Edge

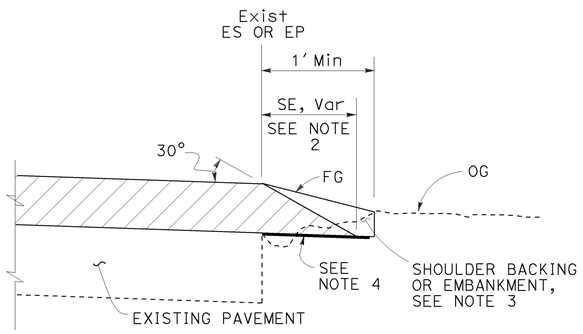

CASE C
Safety Edge

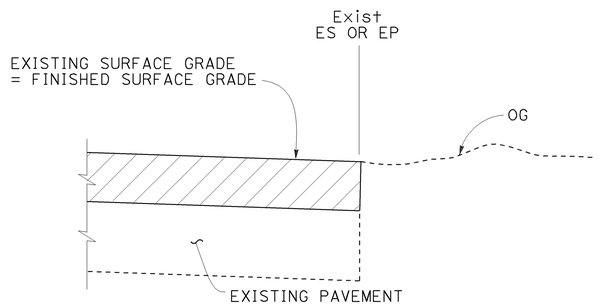

CASE D
Vertical Edge

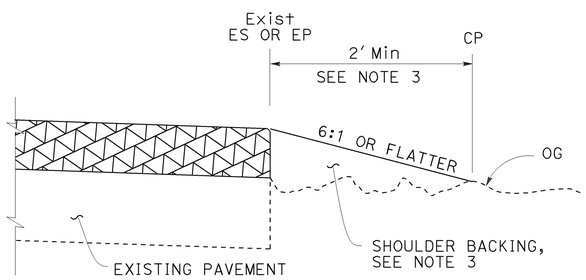

CASE E
Vertical Edge

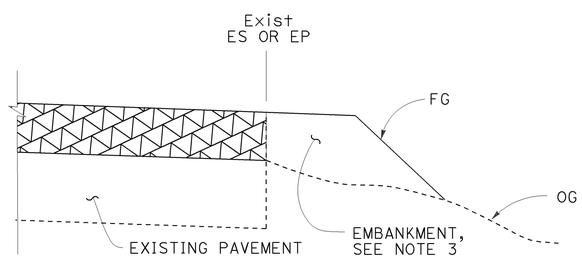

CASE F
Vertical Edge
* See Table A and Revised Std Plan RSP P74

LEGEND:

- HMA OVERLAY
- HMA OR CONCRETE OVERLAY
- CONCRETE OVERLAY

ABBREVIATIONS:

SE SAFETY EDGE
TT TOTAL THICKNESS OF SE

TABLE A
EDGE TREATMENT FOR VARIOUS OVERLAY THICKNESS AND CONDITIONS

	OVERLAY THICKNESS	
FIELD CONDITION	LESS THAN 0.15′	0.15′ OR MORE
Exist SLOPE 6:1 OR FLATTER	CASE E	CASE A
Exist SLOPE 3:1 TO 6:1	CASE E	CASE B
Exist SLOPE STEEPER THAN 3:1	CASE F	CASE F
CUT SECTION (REPLACE, COLD PLANE, MILL PAVEMENT)	CASE D	CASE C

ADDITIONAL HMA OR CONCRETE QUANTITIES FOR SE/SIDE/MILE

TYPICAL CROSS SECTION	TT	TOTAL ADDITIONAL MATERIAL FOR SE/SIDE/MILE		
		HMA (TON)	CONCRETE (CY)*	CONCRETE (CY)**
TT	0.15′	NA	NA	NA
	0.20′	13.7	NA	NA
	0.30′	30.9	NA	NA
	0.40′	54.9	NA	NA
	0.45′	69.4	NA	NA
TT 0.43′	0.50′	84.2	NA	NA
	0.60′	113.9	NA	NA
	0.70′	143.6	70.9	94.2
	0.80′	173.3	85.6	112.2
	0.90′	203.0	100.3	130.2
	1.00′	232.7	114.9	148.2
	1.10′	262.4	129.6	166.2
	1.20′	292.1	144.3	184.2

* For Detail "A"
** For Optional Detail "A"

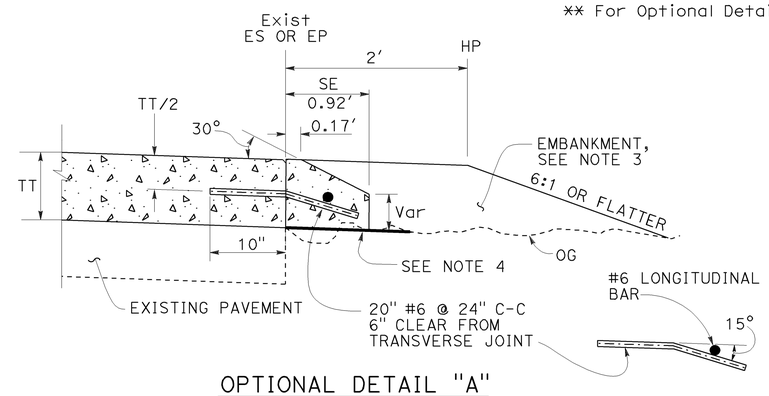

OPTIONAL DETAIL "A"
For concrete overlay
See Note 5

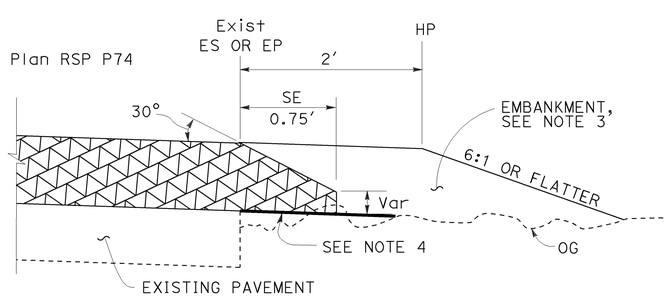

DETAIL "A"
For HMA overlay thickness more than 0.43′ or concrete overlay

NOTES:

1. For limits of safety edge and vertical edge treatments, see Revised Standard Plan RSP P74.
2. Details shown for HMA overlay thickness less than 0.43′. See Detail "A" for HMA overlay thickness more than 0.43′ or concrete overlay.
3. For locations and limits of shoulder backing or embankment see project plans.
4. Grade existing ground to place safety edge. 1′ minimum width
5. Safety edge transverse joint must match overlay transverse joint. End of #6 longitudinal bar must be 2" ±½" clear from transverse joint.
6. Safety edge is not needed in the area of MBGR, barrier, right turn lane and acceleration lane. See Revised Standard Plan RSP P74.

STATE OF CALIFORNIA
DEPARTMENT OF TRANSPORTATION

PAVEMENT EDGE TREATMENTS-OVERLAYS

NO SCALE

RSP P75 DATED JANUARY 20, 2012 SUPPLEMENTS THE STANDARD PLANS BOOK DATED 2010.

REVISED STANDARD PLAN RSP P75

2010 REVISED STANDARD PLAN RSP P75