Dist	COUNTY	ROUTE	POST MILES TOTAL PROJECT	SHEET No.	TOTAL SHEETS
11	SD	76	R2.9 / R7.5	1	39

STATE OF CALIFORNIA

DEPARTMENT OF TRANSPORTATION

ACSTPNH-P076(028)E

PROJECT PLANS FOR CONSTRUCTION ON

STATE HIGHWAY

IN SAN DIEGO COUNTY IN OCEANSIDE FROM MISSION AVENUE UNDERCROSSING TO 0.3 MILE EAST OF GUAJOME LAKE ROAD

TO BE SUPPLEMENTED BY STANDARD PLANS DATED 2010

INDEX OF PLANS

SHEET No.	DESCRIPTION
1	TITLE AND LOCATION MAP
2-3	TYPICAL CROSS SECTIONS
4-11	CONSTRUCTION DETAILS
12	CONSTRUCTION AREA SIGNS
13-17	PAVEMENT DELINEATION DETAILS AND QUANTITIES
18-22	SUMMARY OF QUANTITIES
23	ELECTRICAL PLANS
24-39	REVISED STANDARD PLANS

THE STANDARD PLANS LIST APPLICABLE TO THIS CONTRACT IS INCLUDED IN THE NOTICE TO BIDDERS AND SPECIAL PROVISIONS BOOK.

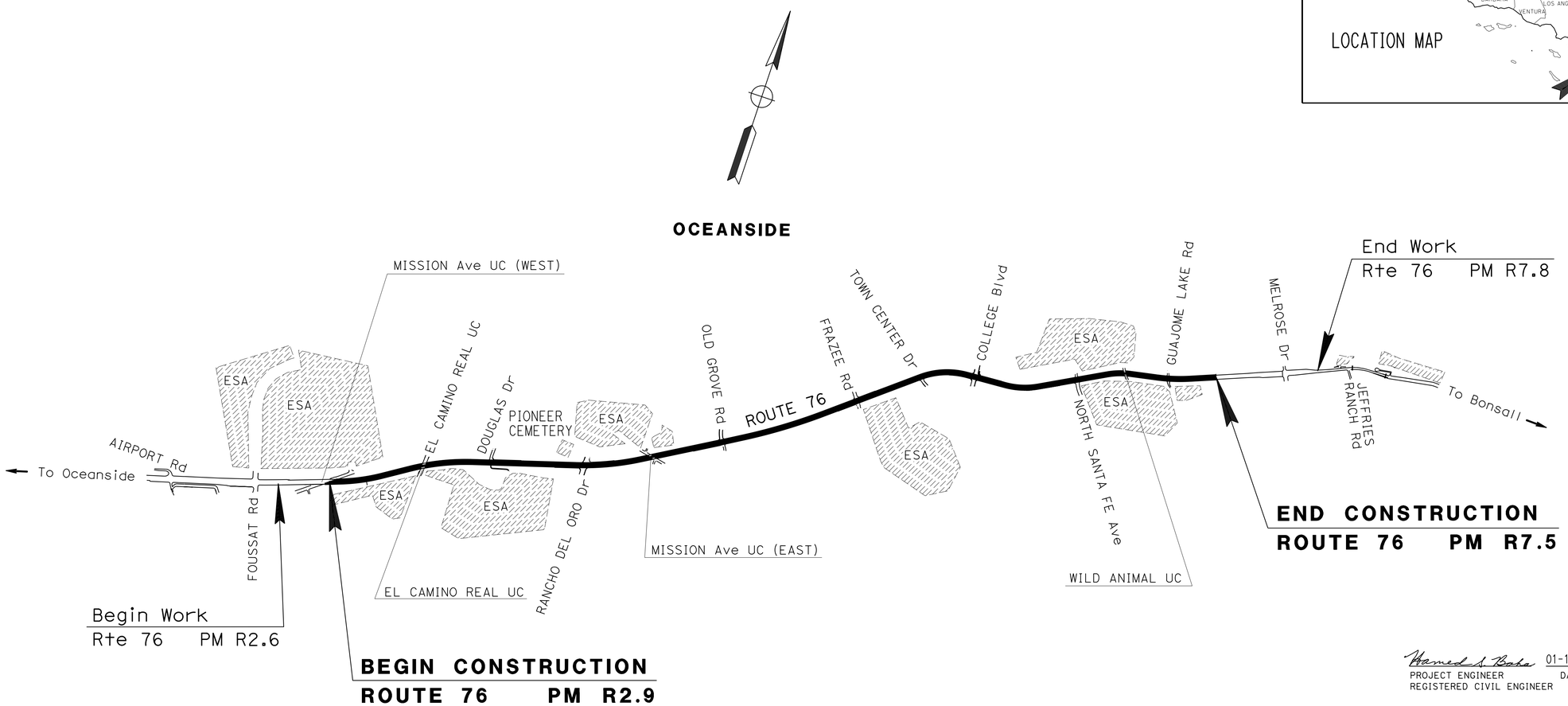

PROJECT MANAGER: ALBERTO GAYON

DESIGN ENGINEER: HAMED S. BAHA

Hamed S. Baha 01-15-14
PROJECT ENGINEER DATE
REGISTERED CIVIL ENGINEER

February 24, 2014
PLANS APPROVAL DATE

REGISTERED PROFESSIONAL ENGINEER
HAMED S. BAHA
No. 74499
Exp. 12-31-15
CIVIL
STATE OF CALIFORNIA

THE STATE OF CALIFORNIA OR ITS OFFICERS OR AGENTS SHALL NOT BE RESPONSIBLE FOR THE ACCURACY OR COMPLETENESS OF SCANNED COPIES OF THIS PLAN SHEET.

THE CONTRACTOR SHALL POSSESS THE CLASS (OR CLASSES) OF LICENSE AS SPECIFIED IN THE "NOTICE TO BIDDERS."

NO SCALE

CONTRACT No.	11-2M6704
PROJECT ID	1113000096

LAST REVISION 02-07-14

DATE PLOTTED => 26-FEB-2014
TIME PLOTTED => 09:06

Dist	COUNTY	ROUTE	POST MILES TOTAL PROJECT	SHEET No.	TOTAL SHEETS
11	SD	76	R2.9/R7.5	2	39

Hamed S. Baha 01-15-14
REGISTERED CIVIL ENGINEER DATE

02-24-14
PLANS APPROVAL DATE

REGISTERED PROFESSIONAL ENGINEER HAMED S. BAHA No. 74499 Exp. 12-31-15 CIVIL STATE OF CALIFORNIA

THE STATE OF CALIFORNIA OR ITS OFFICERS OR AGENTS SHALL NOT BE RESPONSIBLE FOR THE ACCURACY OR COMPLETENESS OF SCANNED COPIES OF THIS PLAN SHEET.

NOTES:

1. DIMENSIONS OF THE PAVEMENT STRUCTURES (STRUCTURAL SECTIONS) ARE SUBJECT TO TOLERANCES SPECIFIED IN THE STANDARD SPECIFICATIONS.
2. FOR ACCURATE RIGHT OF WAY DATA, CONTACT RIGHT OF WAY ENGINEERING AT THE DISTRICT OFFICE.
3. FOG SEAL EXISTING AC DIKE AND HMA DIKES AND SHOULDER RUMBLE STRIPS.
4. SEE CONSTRUCTION DETAILS SHEETS AND QUANTITY SHEETS FOR RUMBLE STRIPS AND COLD PLANE LOCATIONS.
5. (*) = MATCH EXISTING SLOPE

PAVEMENT CLIMATE REGION

SOUTH COAST

ABBREVIATIONS:

RHMA = RUBBERIZED HOT MIX ASPHALT
BWC-G = BONDED WEARING COUSE-GAP GRADED

ROUTE 76 DESIGN DESIGNATION

	AT EL CAMINO REAL	AT SANTA FE Ave
Exist ADT - 2012	= 52,900	= 39,000
Exist PEAK HOUR	= 4,190	= 3,140
FORECASTED ADT (2025)	= 56,900	= 42,700
FORECASTED PEAK HOUR	= 4,590	= 3,440
FORECASTED ADT (2030)	= 61,300	= 46,000
FORECASTED PEAK HOUR (2030)	= 4,940	= 3,710
TRUCK	= 5%	= 5%

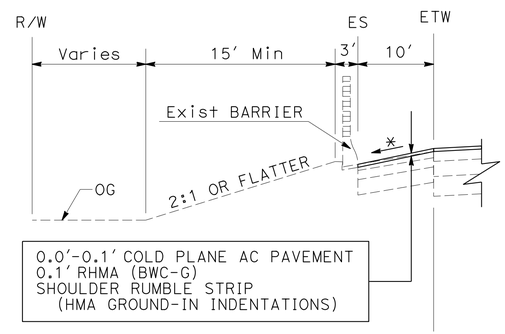

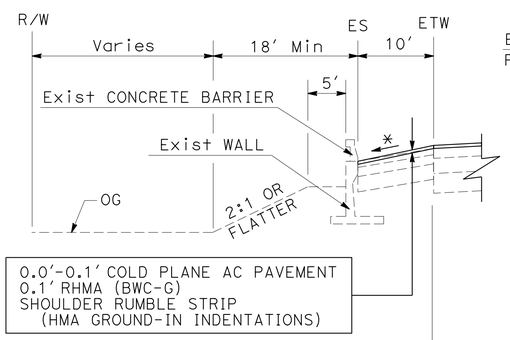

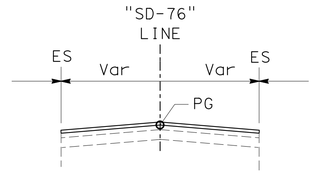

PM R3.48 - R3.77; PM R3.80 - R4.23
PM R6.38 - R6.75; PM R6.77 - R7.28

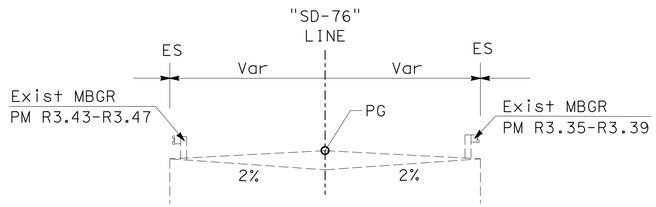

PM R3.03 - R3.42; PM R7.28 - R7.50

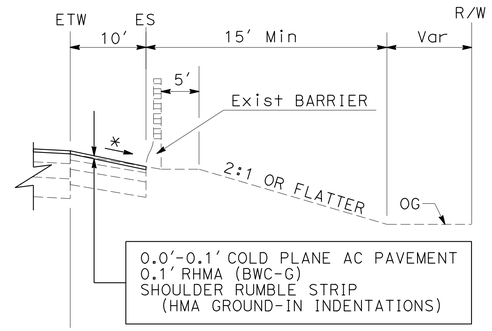

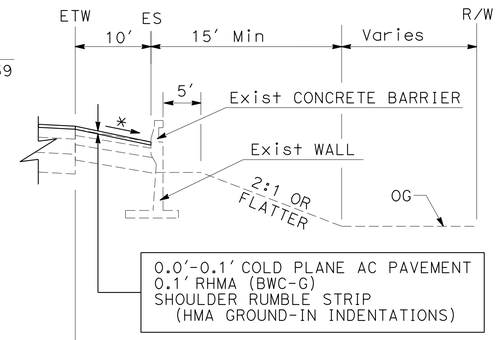

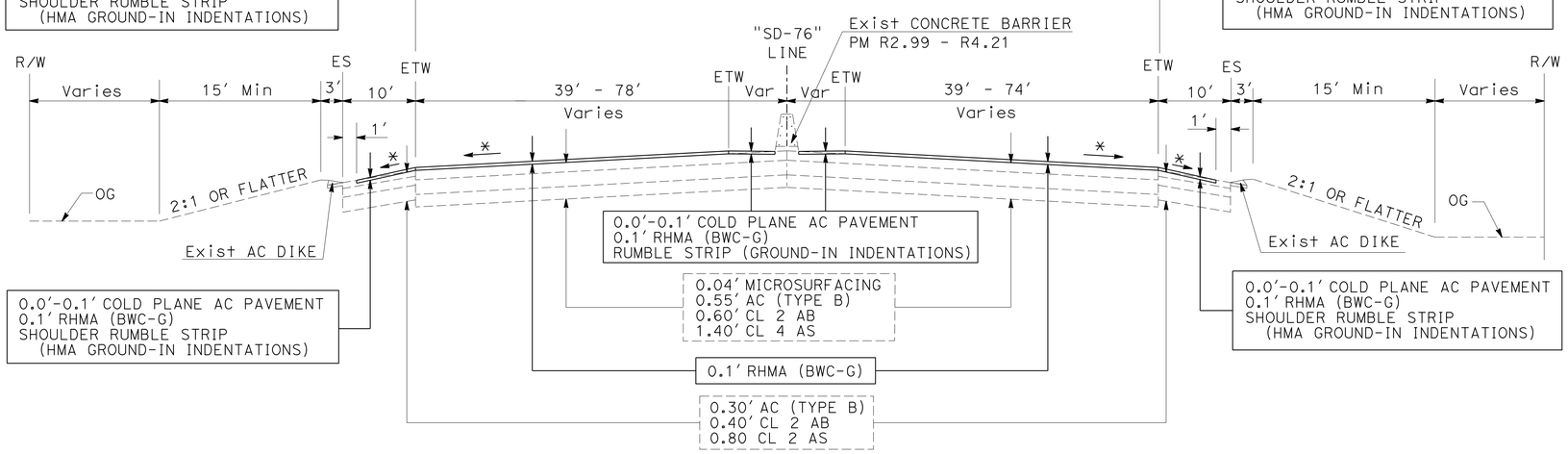

ROUTE 76

PM R2.90 - R3.03; PM R3.42 - R3.48;
PM R3.77 - R3.80; PM R4.23 - R4.27;
PM R6.21 - R6.38; PM R6.75 - R6.77

Exist WALLS

EB = PM R3.03 - R3.42

Exist AC DIKE (TYPE A)

EB = PM R3.66 - R3.73
EB = PM R6.96 - R6.97
EB = PM R7.05 - R7.17
WB = PM R3.04 - R3.05
WB = PM R3.34 - R3.39
WB = PM R3.44 - R3.65
WB = PM R6.37 - R6.38
WB = PM R6.69 - R6.71
WB = PM R6.83 - R6.88

Exist AC DIKE (TYPE C)

EB = PM R3.37 - R3.38
WB = PM R3.05 - R3.06
WB = PM R3.65 - R3.66

Exist AC DIKE (TYPE D)

EB = PM R3.23 - R3.37
EB = PM R3.44 - R3.66
EB = PM R3.76 - R4.19
EB = PM R6.74 - R6.96
WB = PM R3.06 - R3.34
WB = PM R3.66 - R3.73
WB = PM R3.76 - R4.19
WB = PM R6.38 - R6.54
WB = PM R6.74 - R6.83

Exist AC DIKE (TYPE E)

EB = PM R6.28 - R6.33
EB = PM R6.65 - R6.71
EB = PM R6.99 - R7.05
EB = PM R7.32 - R7.50
WB = PM R7.08 - R7.17
WB = PM R7.19 - R7.50

Exist AC DIKE (TYPE F)

EB = PM R3.38 - R3.39

TYPICAL CROSS SECTIONS X-1

NO SCALE

REVISED BY | DATE REVISED
REBECCA IGNACIO | HAMED BAHA
CALCULATED-DESIGNED BY | CHECKED BY
FUNCTIONAL SUPERVISOR
ALBERTO GAYON

STATE OF CALIFORNIA - DEPARTMENT OF TRANSPORTATION
Caltrans
MAINTENANCE

LAST REVISION 02-06-14 | DATE PLOTTED => 26-FEB-2014 | TIME PLOTTED => 07:06

Dist	COUNTY	ROUTE	POST MILES TOTAL PROJECT	SHEET No.	TOTAL SHEETS
11	SD	76	R2.9/R7.5	3	39

Hamed S. Baha 01-15-14
REGISTERED CIVIL ENGINEER DATE

02-24-14
PLANS APPROVAL DATE

REGISTERED PROFESSIONAL ENGINEER HAMED S. BAHA No. 74499 Exp. 12-31-15 CIVIL STATE OF CALIFORNIA

THE STATE OF CALIFORNIA OR ITS OFFICERS OR AGENTS SHALL NOT BE RESPONSIBLE FOR THE ACCURACY OR COMPLETENESS OF SCANNED COPIES OF THIS PLAN SHEET.

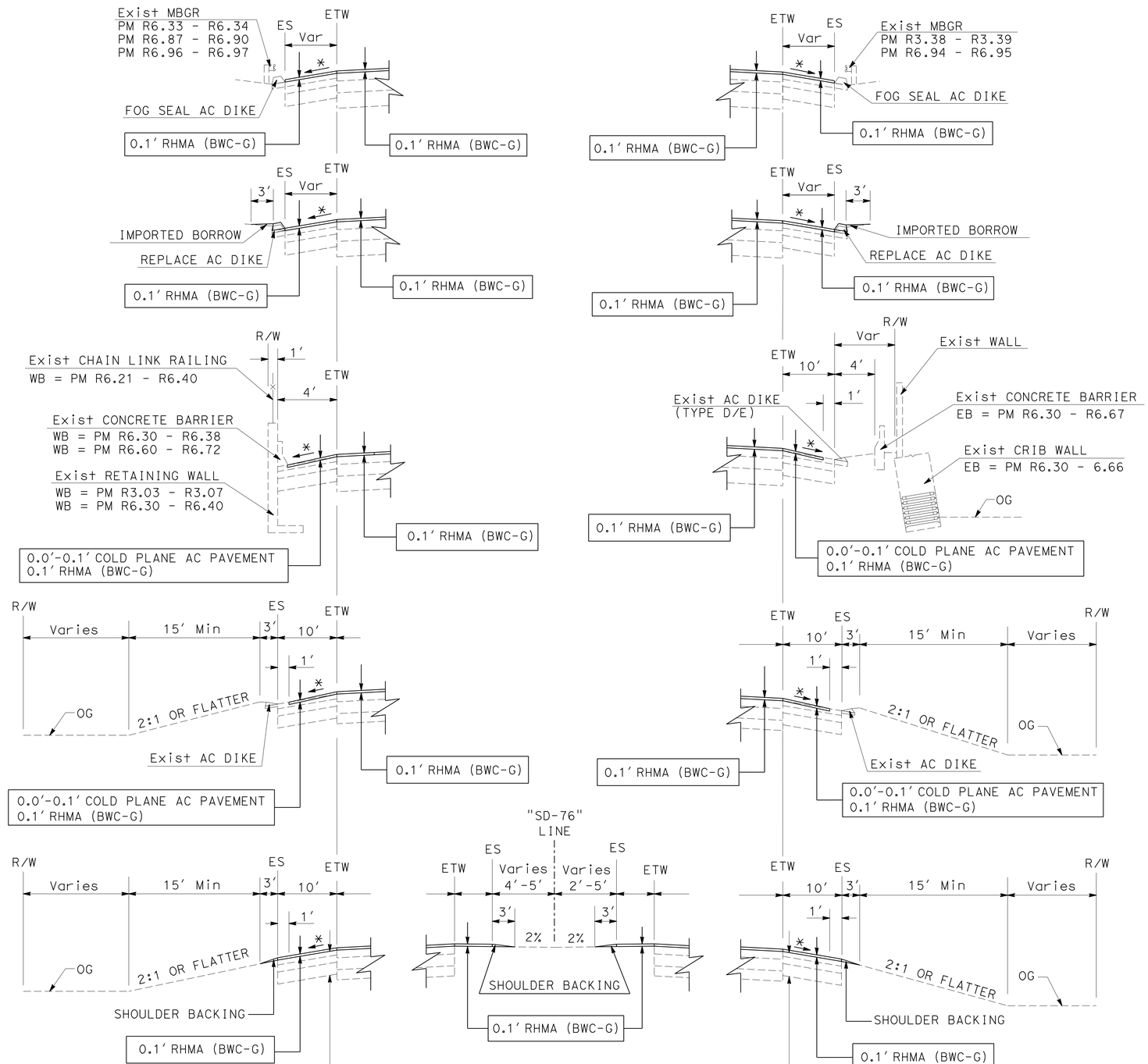

ROUTE 76

TYPICAL CROSS SECTIONS X-2

NO SCALE

REVISED BY | DATE REVISED

REBECCA IGNACIO | HAMED BAHA

CALCULATED-DESIGNED BY | CHECKED BY

FUNCTIONAL SUPERVISOR: ALBERTO GAYON

STATE OF CALIFORNIA - DEPARTMENT OF TRANSPORTATION

Caltrans® MAINTENANCE

LAST REVISION 01-30-14 | DATE PLOTTED => 26-FEB-2014 | TIME PLOTTED => 07:06

Dist	COUNTY	ROUTE	POST MILES TOTAL PROJECT	SHEET No.	TOTAL SHEETS
11	SD	76	R2.9/R7.5	4	39

Hamed S. Baha 01-15-14
REGISTERED CIVIL ENGINEER DATE

02-24-14
PLANS APPROVAL DATE

REGISTERED PROFESSIONAL ENGINEER HAMED S. BAHA No. 74499 Exp. 12-31-15 CIVIL STATE OF CALIFORNIA

THE STATE OF CALIFORNIA OR ITS OFFICERS OR AGENTS SHALL NOT BE RESPONSIBLE FOR THE ACCURACY OR COMPLETENESS OF SCANNED COPIES OF THIS PLAN SHEET.

NOTES:

1. SEE SUMMARY OF QUANTITIES SHEETS FOR COMPLETE LIST OF AC/HMA DIKES AND SHOULDER BACKING, FOG SEAL, RUMBLE STRIPS, RHMA OVERLAY AND COLD PLANING LOCATIONS.
2. FOR ACCURATE RIGHT OF WAY DATA, CONTACT RIGHT OF WAY ENGINEERING AT THE DISTRICT OFFICE.
3. RE-ESTABLISH EXISTING GROUND-IN RUMBLE STRIPS AT ORIGINAL LOCaTIONS PER Std PLAN A40B.
4. STOP COLD PLANE LIMIT 2′ SHORT OF LIMIT LINE AT CROSS STREETS.
5. EXIST ELECTRICAL FEATURES TO BE PRESERVED UNLESS SHOWN OTHERWISE ON ELECTRICAL SHEETS.
6. FROM PM R4.2 TO PM R7.5, MEDIAN TO BE RE-CONSTRUCTED UNDER EA:11-406604.

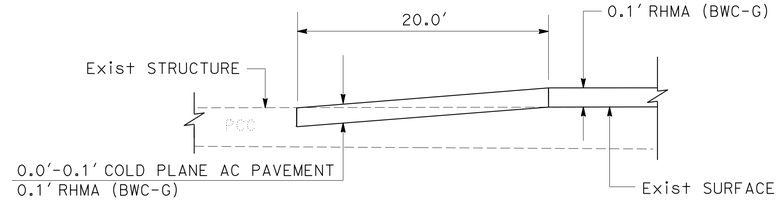

TYPICAL CONFORM AT STRUCTURES

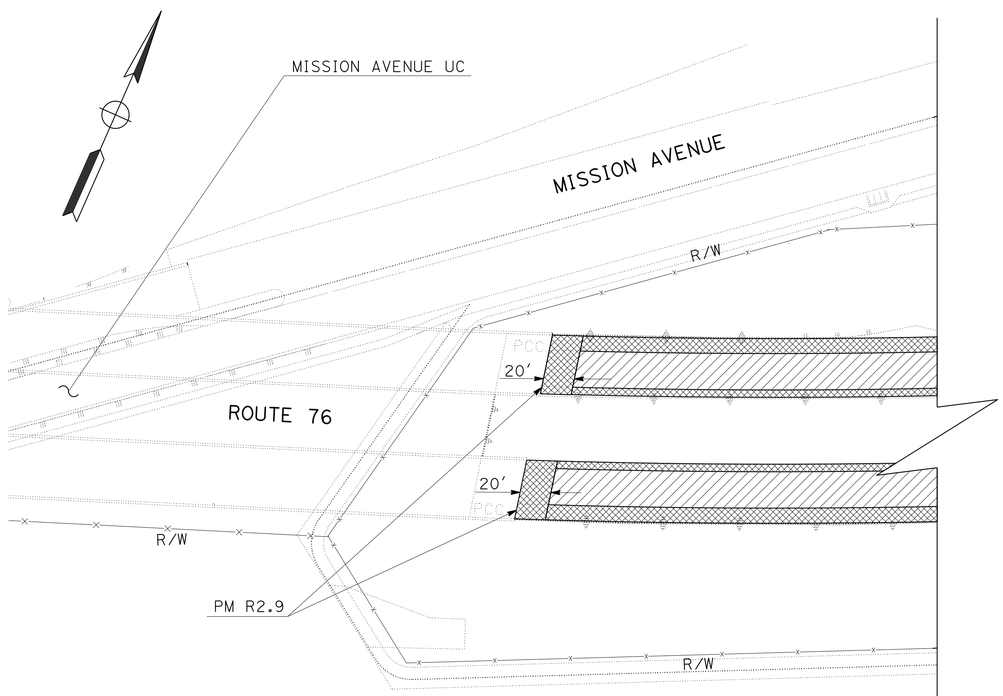

MISSION AVENUE UC (WEST)

PM R2.92

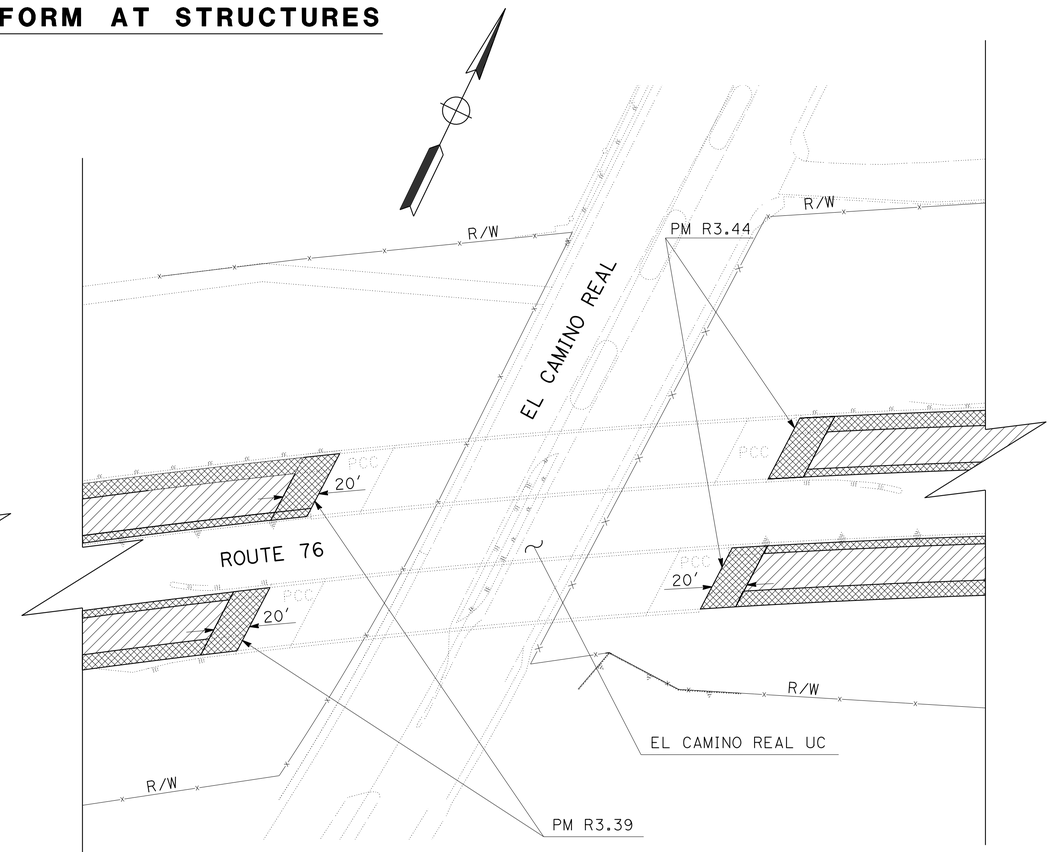

EL CAMINO REAL UC

PM R3.41

LEGEND:

= 0.10′ RHMA (BWC-G)

= 0.0′-0.10′ COLD PLANE AC PAVEMENT
0.10′ RHMA (BWC-G)

CONSTRUCTION DETAILS

NO SCALE

C-1

STATE OF CALIFORNIA - DEPARTMENT OF TRANSPORTATION
Caltrans® MAINTENANCE

FUNCTIONAL SUPERVISOR: ALBERTO GAYON

CALCULATED-DESIGNED BY: REBECCA IGNACIO
CHECKED BY: HAMED BAHA

REVISED BY
DATE REVISED

LAST REVISION 02-10-14
DATE PLOTTED => 26-FEB-2014
TIME PLOTTED => 07:06

Dist	COUNTY	ROUTE	POST MILES TOTAL PROJECT	SHEET No.	TOTAL SHEETS
11	SD	76	R2.9/R7.5	5	39

Hamed S. Baha 01-15-14
REGISTERED CIVIL ENGINEER DATE

02-24-14
PLANS APPROVAL DATE

REGISTERED PROFESSIONAL ENGINEER HAMED S. BAHA No. 74499 Exp. 12-31-15 CIVIL STATE OF CALIFORNIA

THE STATE OF CALIFORNIA OR ITS OFFICERS OR AGENTS SHALL NOT BE RESPONSIBLE FOR THE ACCURACY OR COMPLETENESS OF SCANNED COPIES OF THIS PLAN SHEET.

NOTE:

FOR ACCURATE RIGHT OF WAY DATA, CONTACT RIGHT OF WAY ENGINEERING AT THE DISTRICT OFFICE.

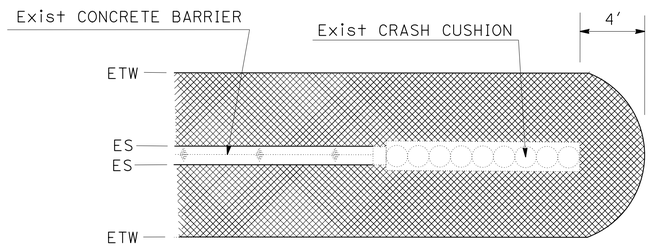

PLAN

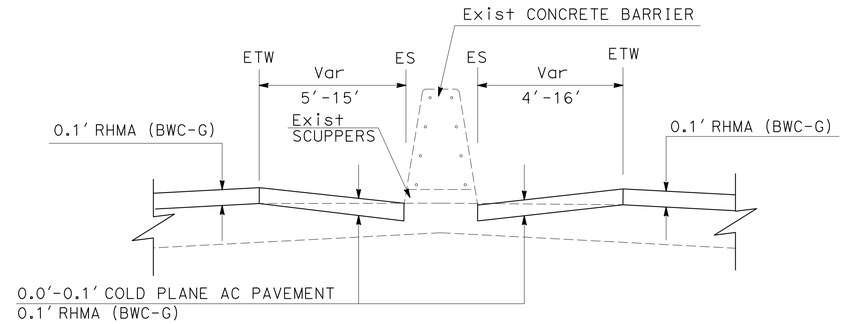

SECTION A-A

CONSTRUCTION DETAIL AT CONCRETE BARRIERS

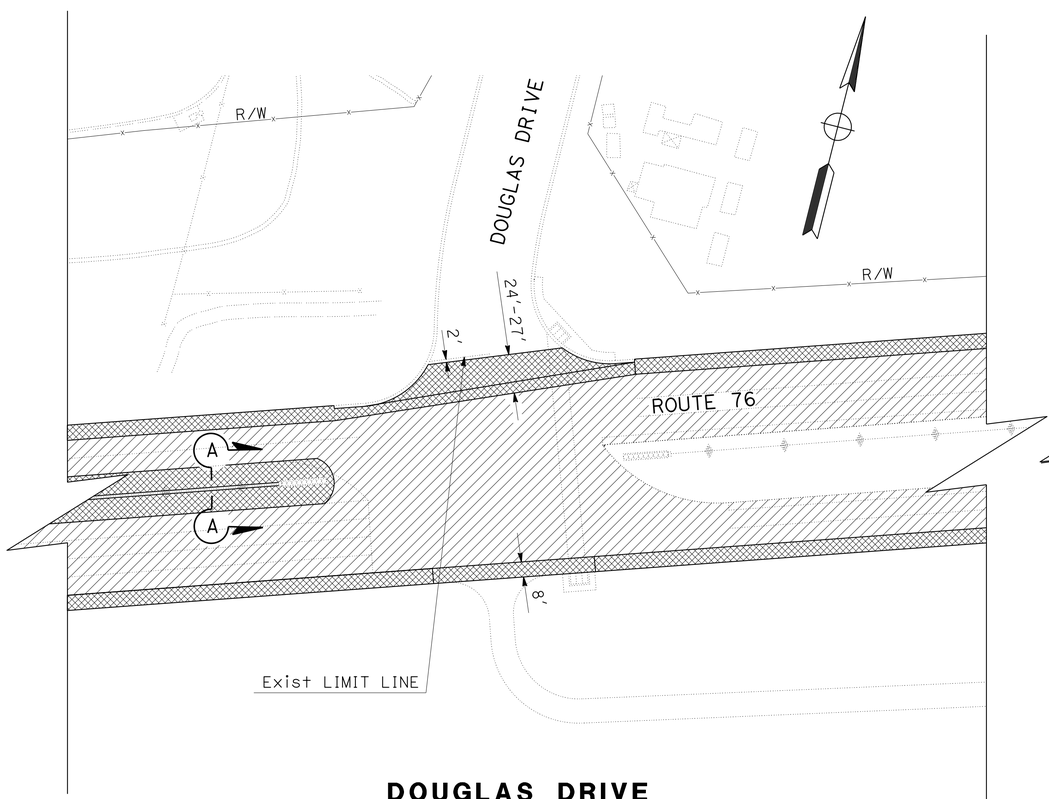

DOUGLAS DRIVE
PM R3.75

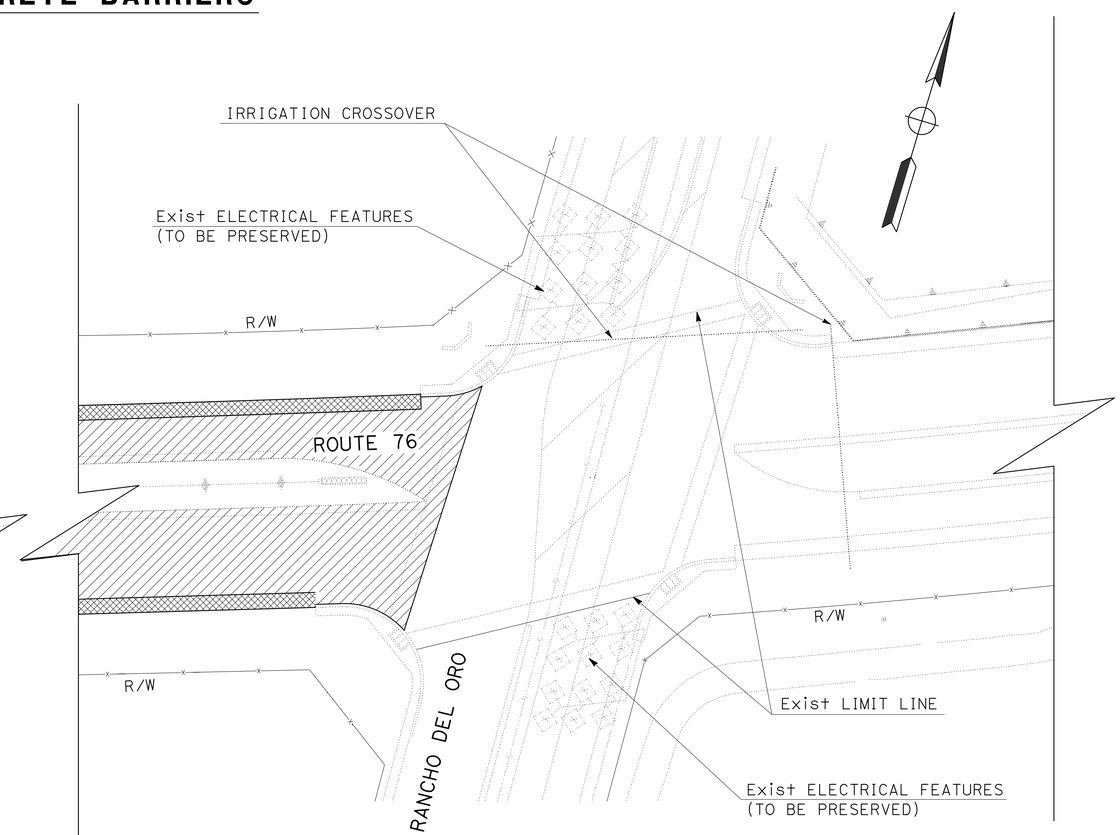

RANCHO DEL ORO DRIVE
PM R4.21

CONSTRUCTION DETAILS

NO SCALE

C-2

STATE OF CALIFORNIA - DEPARTMENT OF TRANSPORTATION
Caltrans
MAINTENANCE

FUNCTIONAL SUPERVISOR: ALBERTO GAYON
CALCULATED-DESIGNED BY: REBECCA IGNACIO
CHECKED BY: HAMED BAHA
REVISED BY
DATE REVISED

LAST REVISION 01-29-14
DATE PLOTTED => 26-FEB-2014
TIME PLOTTED => 07:06

Dist	COUNTY	ROUTE	POST MILES TOTAL PROJECT	SHEET No.	TOTAL SHEETS
11	SD	76	R2.9/R7.5	6	39

Hamed S. Baha 01-15-14
REGISTERED CIVIL ENGINEER DATE

02-24-14
PLANS APPROVAL DATE

REGISTERED PROFESSIONAL ENGINEER HAMED S. BAHA No. 74499 Exp. 12-31-15 CIVIL STATE OF CALIFORNIA

THE STATE OF CALIFORNIA OR ITS OFFICERS OR AGENTS SHALL NOT BE RESPONSIBLE FOR THE ACCURACY OR COMPLETENESS OF SCANNED COPIES OF THIS PLAN SHEET.

NOTE:

FOR ACCURATE RIGHT OF WAY DATA, CONTACT RIGHT OF WAY ENGINEERING AT THE DISTRICT OFFICE.

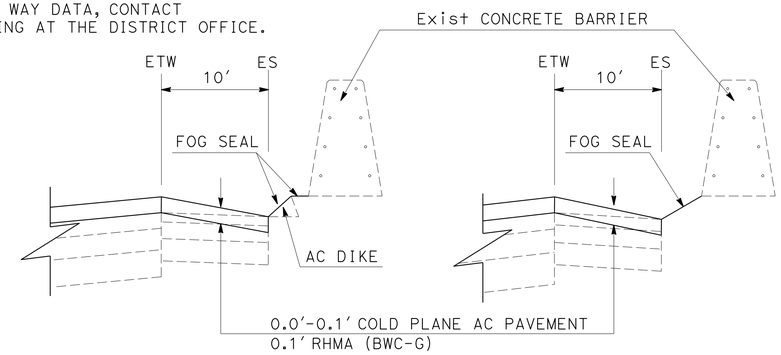

CONSTRUCTION DETAIL AT PM R6.22 - R6.33

EB Rte 76

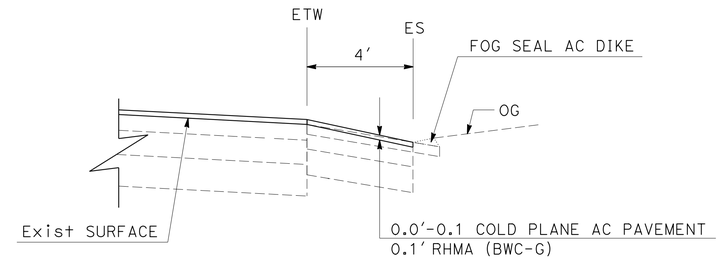

SECTION C-C

EB Rte 76 PM R6.58 - R6.71

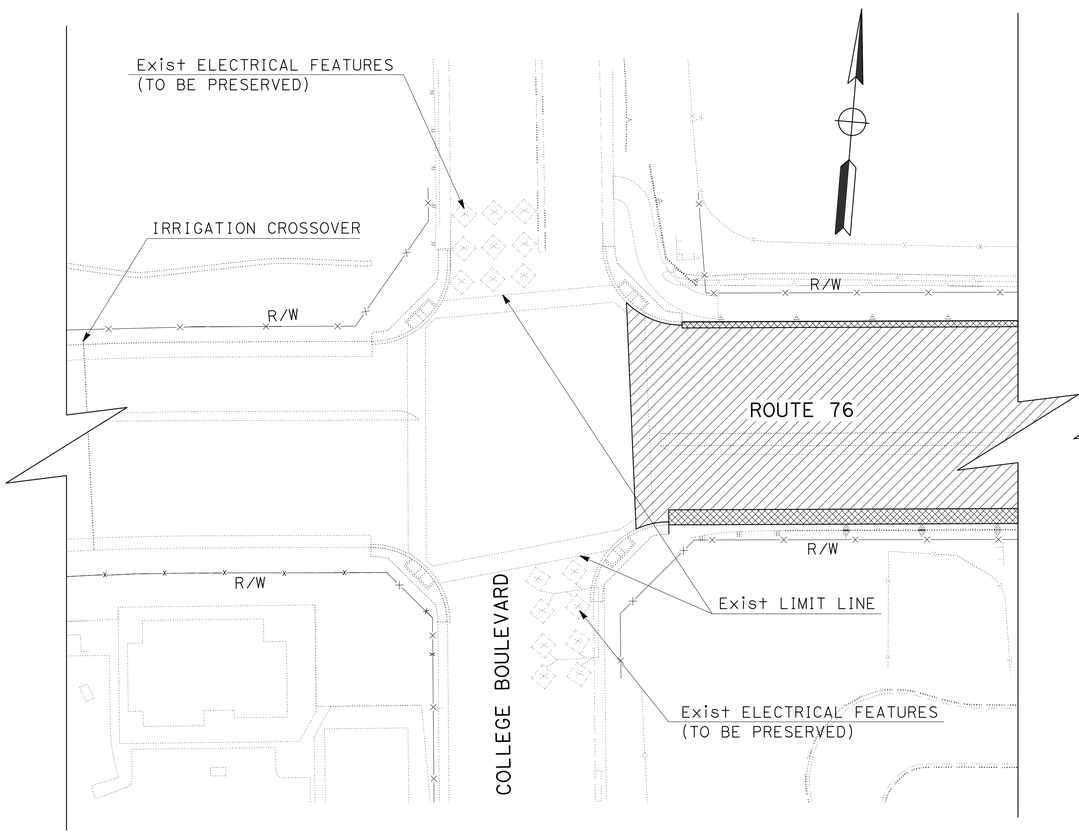

COLLEGE BOULEVARD

PM R6.21

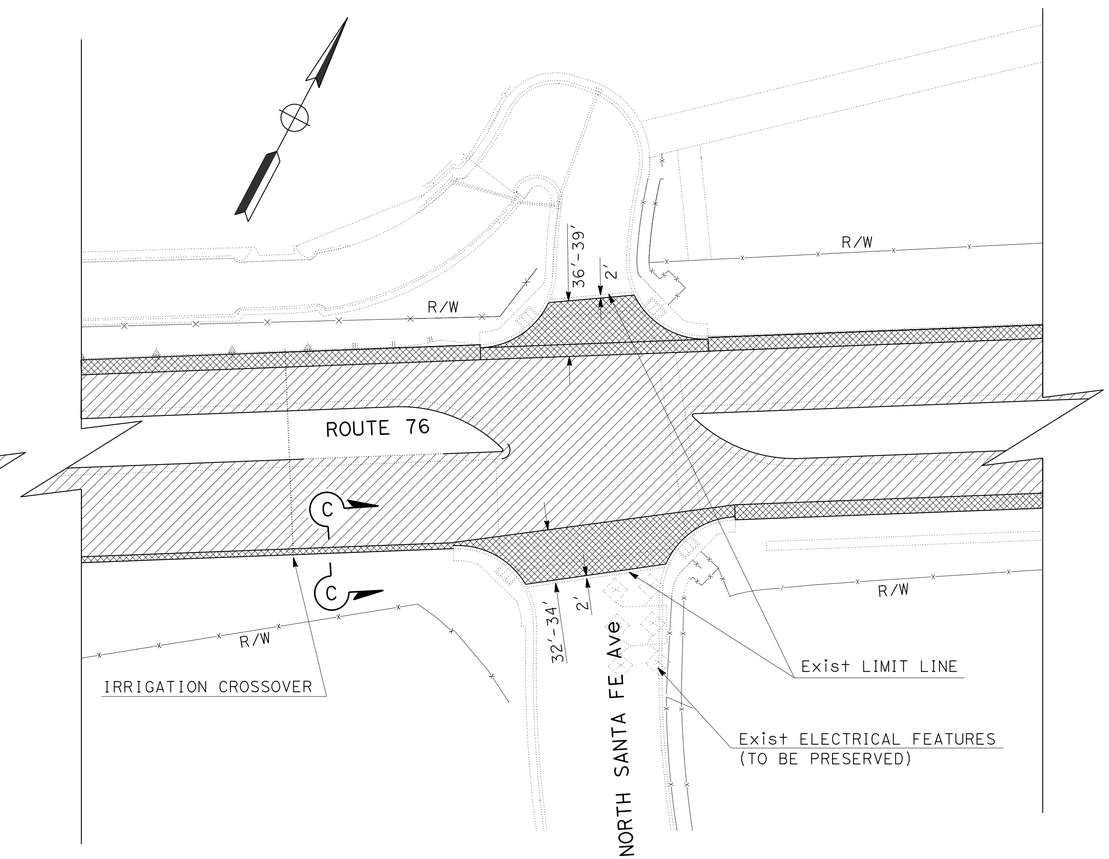

NORTH SANTA FE AVENUE

PM R6.72

CONSTRUCTION DETAILS

NO SCALE

C-3

STATE OF CALIFORNIA - DEPARTMENT OF TRANSPORTATION
Caltrans MAINTENANCE

FUNCTIONAL SUPERVISOR: ALBERTO GAYON
CALCULATED-DESIGNED BY: REBECCA IGNACIO
CHECKED BY: HAMED BAHA
REVISED BY
DATE REVISED

LAST REVISION 02-07-14
DATE PLOTTED => 26-FEB-2014
TIME PLOTTED => 07:06

Dist	COUNTY	ROUTE	POST MILES TOTAL PROJECT	SHEET No.	TOTAL SHEETS
11	SD	76	R2.9/R7.5	7	39

Hamed S. Baha 01-15-14
REGISTERED CIVIL ENGINEER DATE

02-24-14
PLANS APPROVAL DATE

REGISTERED PROFESSIONAL ENGINEER HAMED S. BAHA No. 74499 Exp. 12-31-15 CIVIL STATE OF CALIFORNIA

THE STATE OF CALIFORNIA OR ITS OFFICERS OR AGENTS SHALL NOT BE RESPONSIBLE FOR THE ACCURACY OR COMPLETENESS OF SCANNED COPIES OF THIS PLAN SHEET.

NOTE:

FOR ACCURATE RIGHT OF WAY DATA, CONTACT RIGHT OF WAY ENGINEERING AT THE DISTRICT OFFICE.

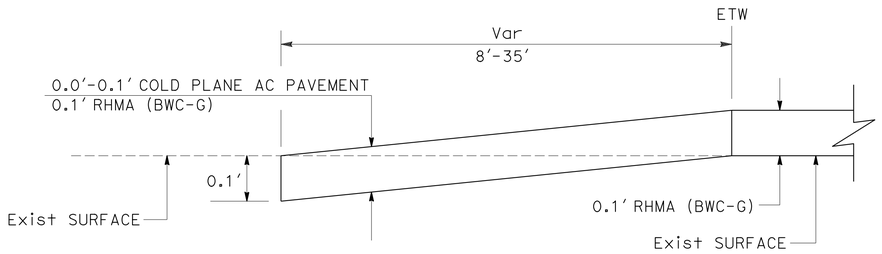

TYPICAL CONFORM AT CROSS STREET

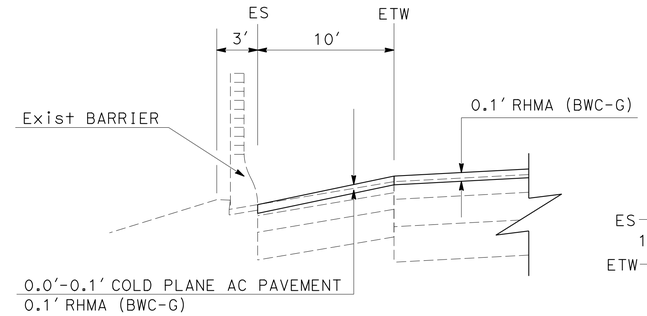

SECTION B-B

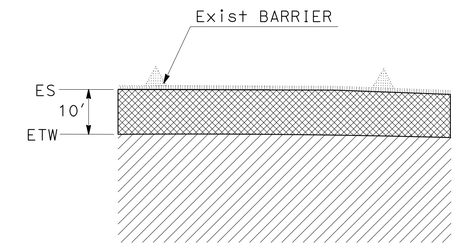

PLAN

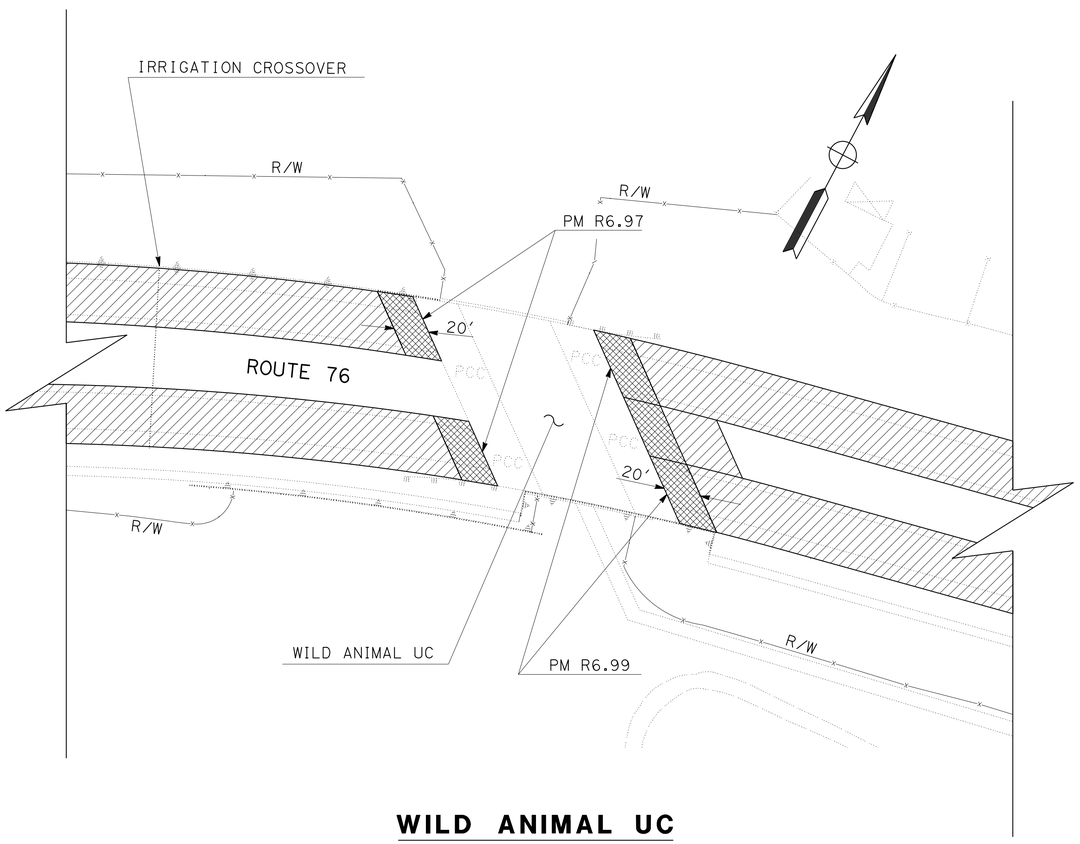

WILD ANIMAL UC

PM R6.95

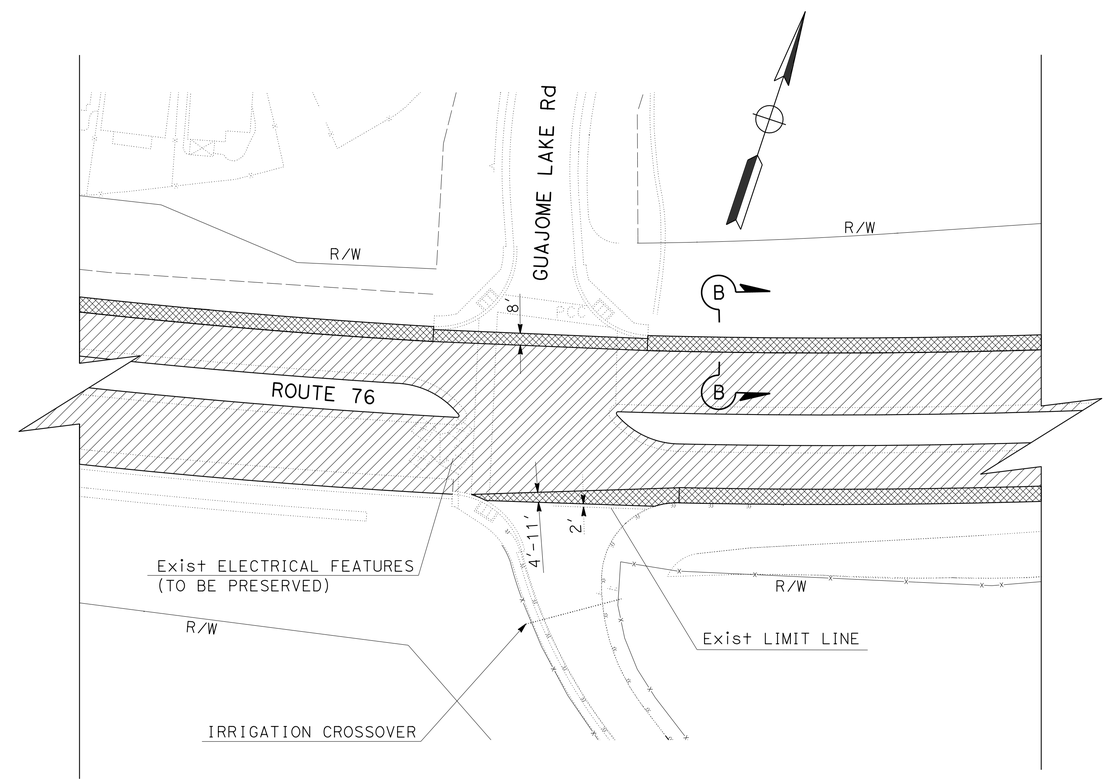

GUAJOME LAKE ROAD

PM R7.18

CONSTRUCTION DETAILS

NO SCALE

C-4

STATE OF CALIFORNIA - DEPARTMENT OF TRANSPORTATION
Caltrans
MAINTENANCE

FUNCTIONAL SUPERVISOR: ALBERTO GAYON
CALCULATED-DESIGNED BY: REBECCA IGNACIO
CHECKED BY: HAMED BAHA
REVISED BY
DATE REVISED

LAST REVISION 02-10-14
DATE PLOTTED => 26-FEB-2014
TIME PLOTTED => 07:06

Dist	COUNTY	ROUTE	POST MILES TOTAL PROJECT	SHEET No.	TOTAL SHEETS
11	SD	76	R2.9/R7.5	8	39

Hamed S. Baha 01-15-14
REGISTERED CIVIL ENGINEER DATE

02-24-14
PLANS APPROVAL DATE

REGISTERED PROFESSIONAL ENGINEER
HAMED S. BAHA
No. 74499
Exp. 12-31-15
CIVIL
STATE OF CALIFORNIA

THE STATE OF CALIFORNIA OR ITS OFFICERS OR AGENTS SHALL NOT BE RESPONSIBLE FOR THE ACCURACY OR COMPLETENESS OF SCANNED COPIES OF THIS PLAN SHEET.

NOTE:

FOR ACCURATE RIGHT OF WAY DATA, CONTACT RIGHT OF WAY ENGINEERING AT THE DISTRICT OFFICE.

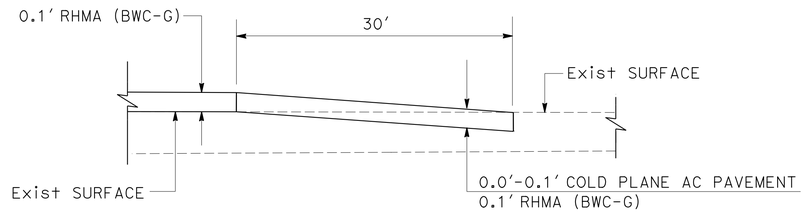

TYPICAL CONFORM AT END OF CONSTRUCTION LIMIT

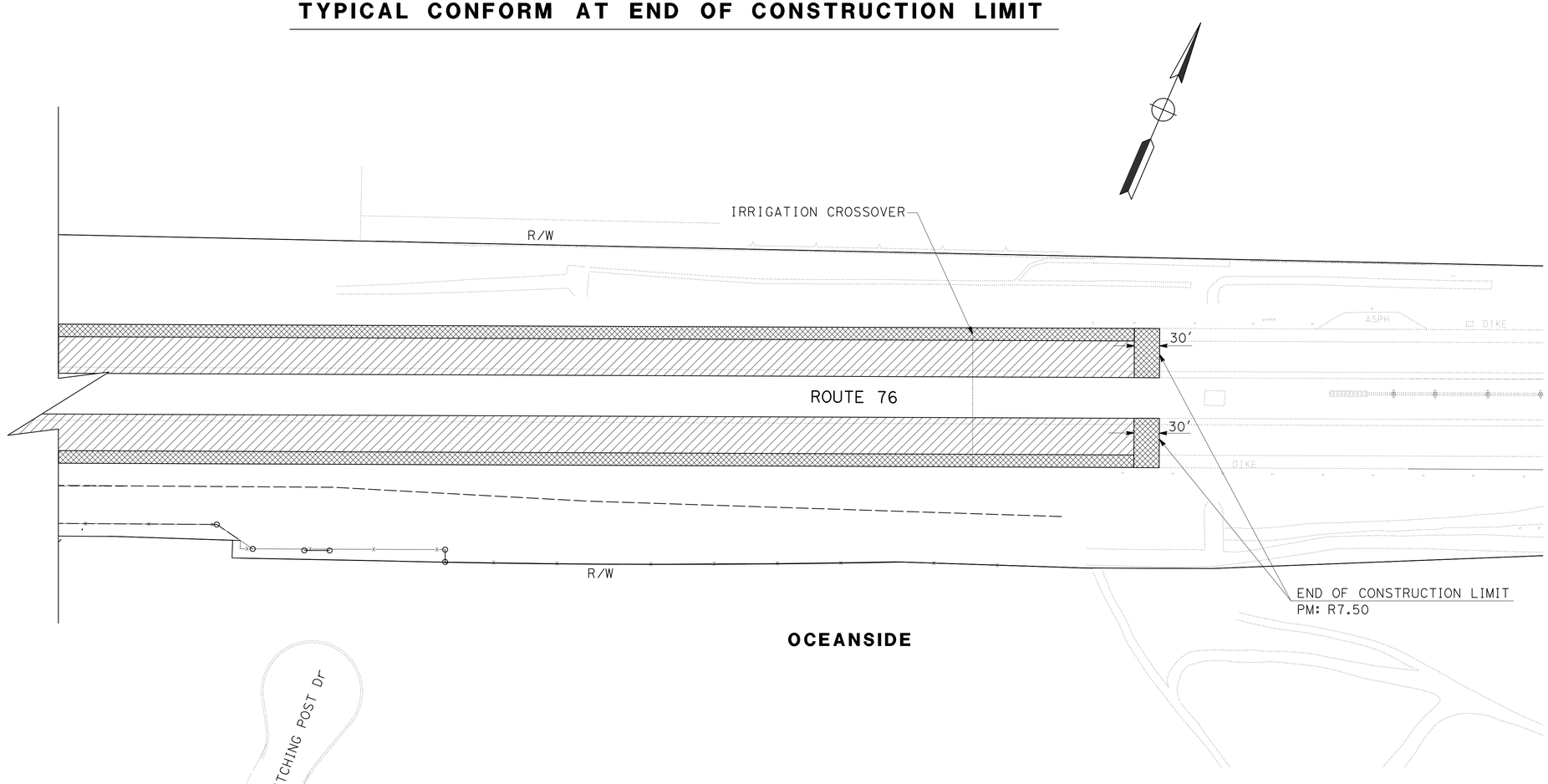

CONSTRUCTION DETAILS

NO SCALE

C-5

STATE OF CALIFORNIA - DEPARTMENT OF TRANSPORTATION
Caltrans
MAINTENANCE

FUNCTIONAL SUPERVISOR: ALBERTO GAYON
CALCULATED-DESIGNED BY: REBECCA IGNACIO
CHECKED BY: HAMED BAHA
REVISED BY
DATE REVISED

LAST REVISION 01-30-14
DATE PLOTTED => 26-FEB-2014
TIME PLOTTED => 07:06

Dist	COUNTY	ROUTE	POST MILES TOTAL PROJECT	SHEET No.	TOTAL SHEETS
11	SD	76	R2.9/R7.5	9	39

Hamed S. Baha 01-15-14
REGISTERED CIVIL ENGINEER DATE

02-24-14
PLANS APPROVAL DATE

REGISTERED PROFESSIONAL ENGINEER HAMED S. BAHA No. 74499 Exp. 12-31-15 CIVIL STATE OF CALIFORNIA

THE STATE OF CALIFORNIA OR ITS OFFICERS OR AGENTS SHALL NOT BE RESPONSIBLE FOR THE ACCURACY OR COMPLETENESS OF SCANNED COPIES OF THIS PLAN SHEET.

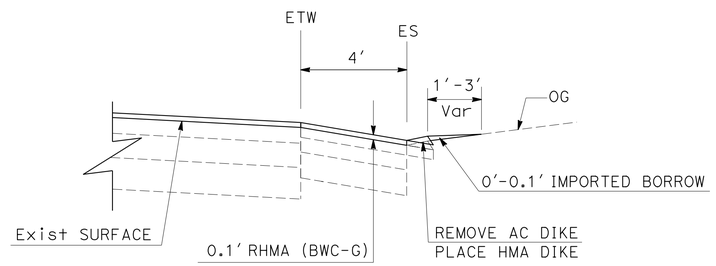

IMPORTED BORROW DETAIL

SEE Q-2 SHEET FOR LOCATIONS AND QUANTITIES

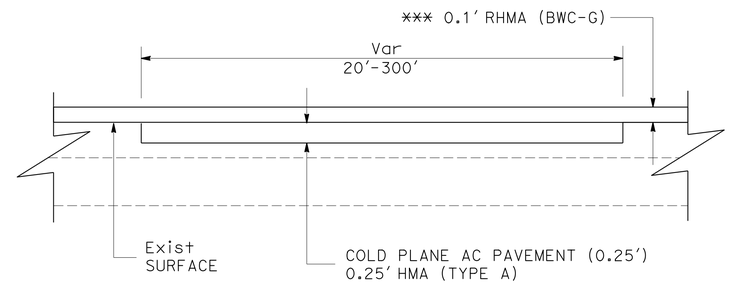

COLD PLANE AC PAVEMENT

SEE Q-2 SHEET FOR LOCATIONS AND QUANTITIES

*** NO 0.1' RHMA (BWC-G) AT PM R4.20 - PM R6.21

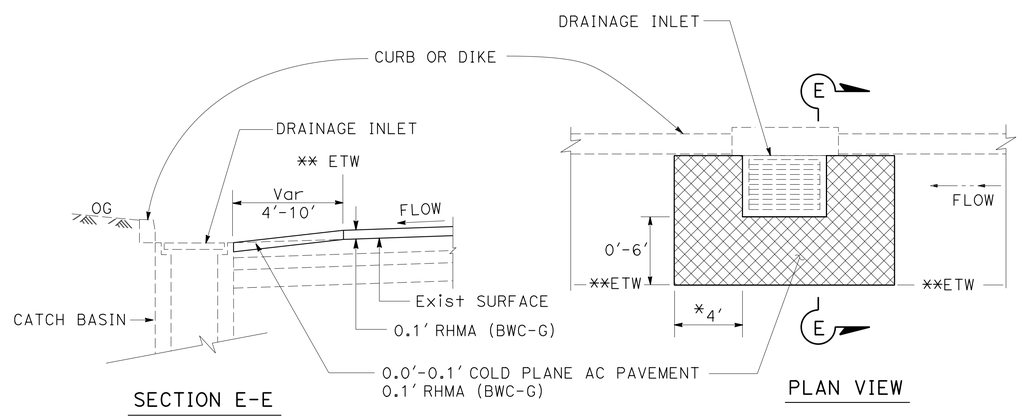

* TYPICALLY 4', UNLESS INDICATED OTHERWISE ON THE CONSTRUCTION DETAILS

** COLD PLANE TYPICALLY LIMITED TO ETW, UNLESS INDICATED OTHERWISE ON THE CONSTRUCTION DETAILS

DRAINAGE INLET CONFORM DETAIL

(SEE SUMMARY OF QUANTITIES SHEETS FOR LOCATIONS)

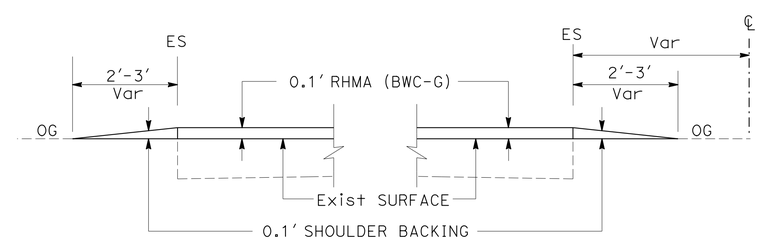

SHOULDER BACKING DETAIL

SEE Q-2 SHEET FOR LOCATIONS AND QUANTITIES

CONSTRUCTION DETAILS

C-6

NO SCALE

STATE OF CALIFORNIA - DEPARTMENT OF TRANSPORTATION
Caltrans® MAINTENANCE

FUNCTIONAL SUPERVISOR: ALBERTO GAYON
CALCULATED-DESIGNED BY: REBECCA IGNACIO
CHECKED BY: HAMED BAHA
REVISED BY
DATE REVISED

LAST REVISION 02-06-14
DATE PLOTTED => 26-FEB-2014
TIME PLOTTED => 07:06

Dist	COUNTY	ROUTE	POST MILES TOTAL PROJECT	SHEET No.	TOTAL SHEETS
11	SD	76	R2.9/R7.5	10	39

Hamed S. Baha 01-15-14
REGISTERED CIVIL ENGINEER DATE

02-24-14
PLANS APPROVAL DATE

REGISTERED PROFESSIONAL ENGINEER HAMED S. BAHA No. 74499 Exp. 12-31-15 CIVIL STATE OF CALIFORNIA

THE STATE OF CALIFORNIA OR ITS OFFICERS OR AGENTS SHALL NOT BE RESPONSIBLE FOR THE ACCURACY OR COMPLETENESS OF SCANNED COPIES OF THIS PLAN SHEET.

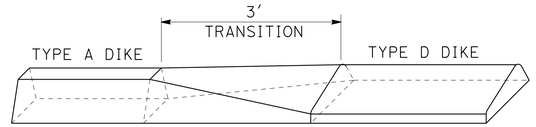

TYPE "A" TO TYPE "D" DIKE

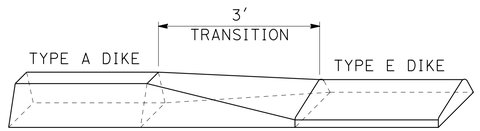

TYPE "A" TO TYPE "E" DIKE

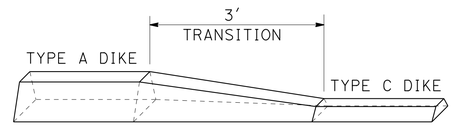

TYPE "A" TO TYPE "C" DIKE

DIKE TRANSITION DETAILS

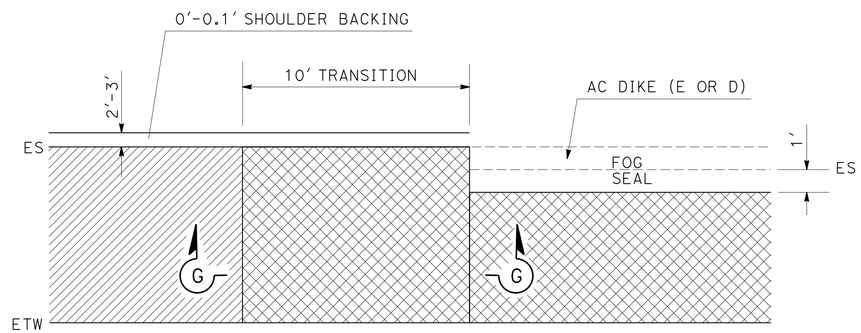

PLAN

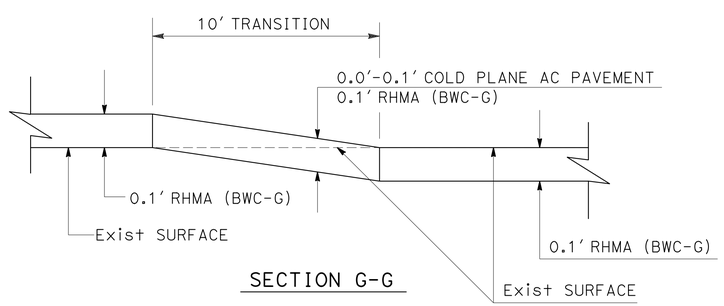

SECTION G-G

COLD PLANE TRANSITION AT HMA DIKE DETAIL

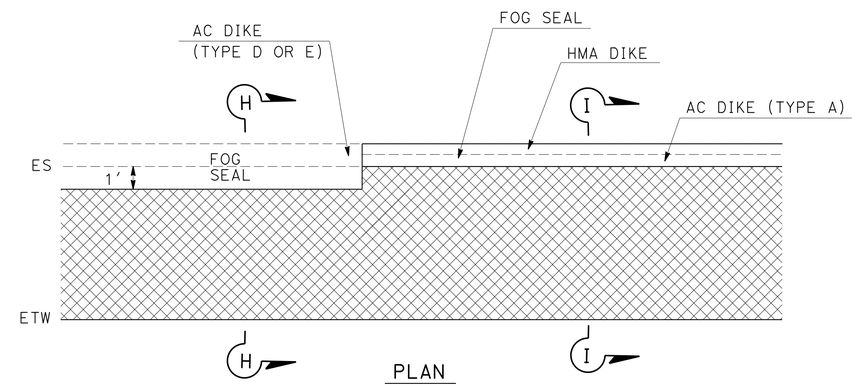

PLAN

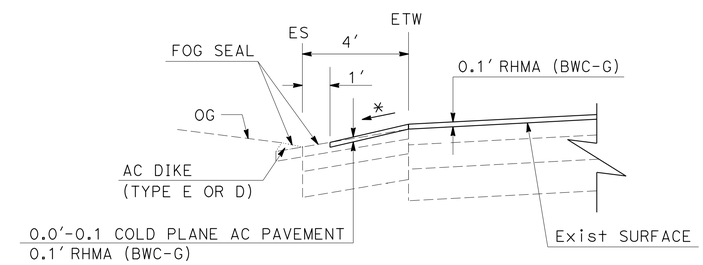

SECTION H-H

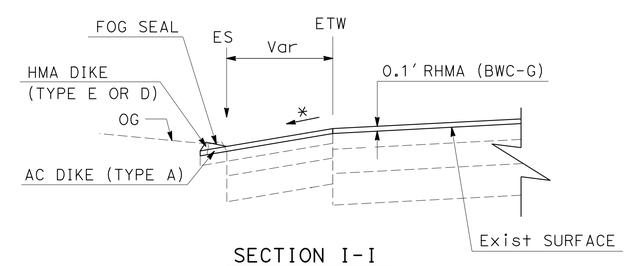

SECTION I-I

COLD PLANE TRANSITION AT AC DIKE/HMA DIKE DETAIL

CONSTRUCTION DETAILS

NO SCALE

C-7

STATE OF CALIFORNIA - DEPARTMENT OF TRANSPORTATION
Caltrans MAINTENANCE

FUNCTIONAL SUPERVISOR: ALBERTO GAYON
CALCULATED-DESIGNED BY: REBECCA IGNACIO
CHECKED BY: HAMED BAHA
REVISED BY
DATE REVISED

LAST REVISION 01-30-14
DATE PLOTTED => 26-FEB-2014
TIME PLOTTED => 07:06

Dist	COUNTY	ROUTE	POST MILES TOTAL PROJECT	SHEET No.	TOTAL SHEETS
11	SD	76	R2.9/R7.5	11	39

Hamed S. Baha 01-15-14
REGISTERED CIVIL ENGINEER DATE

02-24-14
PLANS APPROVAL DATE

REGISTERED PROFESSIONAL ENGINEER HAMED S. BAHA No. 74499 Exp. 12-31-15 CIVIL STATE OF CALIFORNIA

THE STATE OF CALIFORNIA OR ITS OFFICERS OR AGENTS SHALL NOT BE RESPONSIBLE FOR THE ACCURACY OR COMPLETENESS OF SCANNED COPIES OF THIS PLAN SHEET.

NOTE: 1. OVERLAP BIAXIAL GEOGRID A 2-FEET MINIMUM.

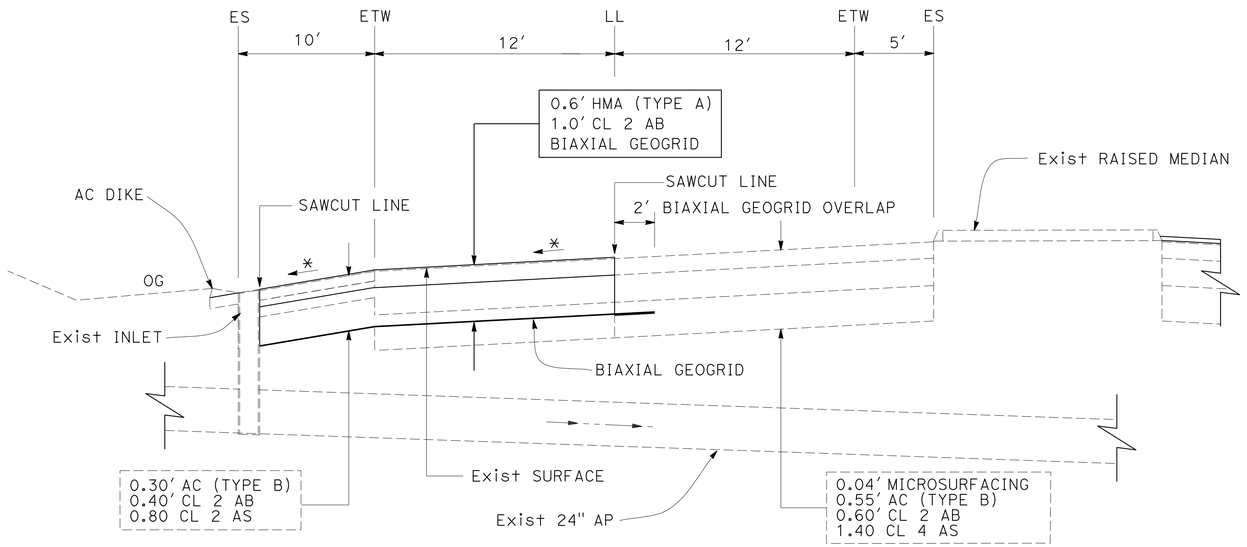

SECTION VIEW (LANE 2)

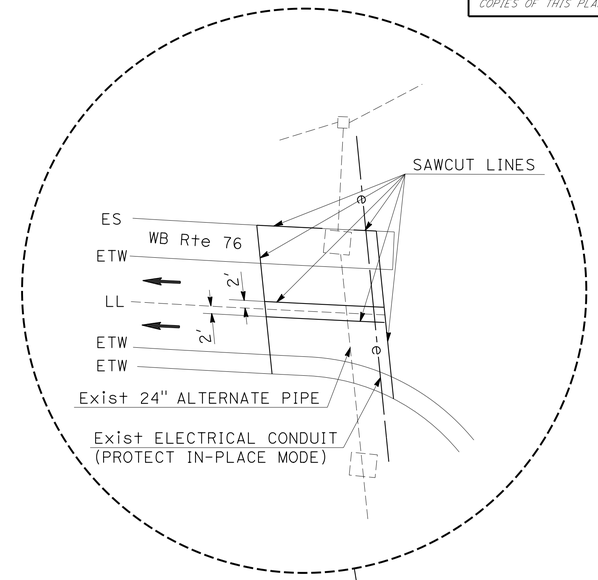

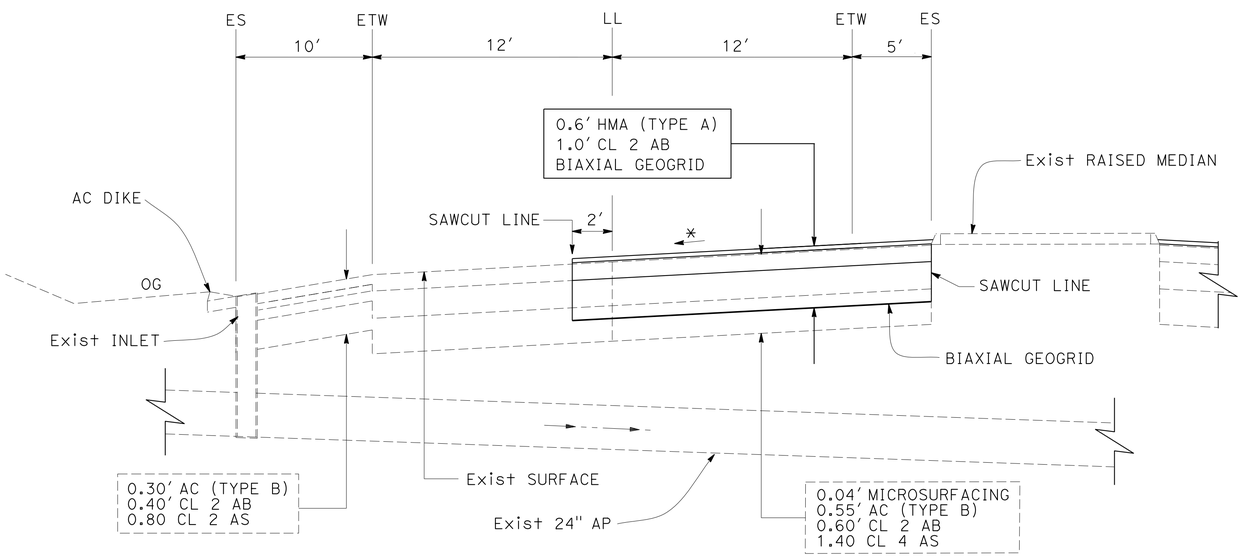

SECTION VIEW (LANE 1)

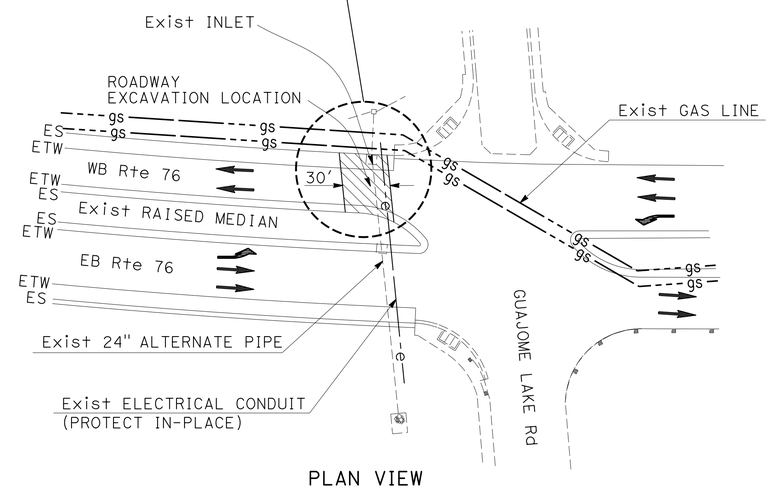

PLAN VIEW

REPLACE ASPHALT CONCRETE SURFACING AT WB 76 PM R7.1

CONSTRUCTION DETAILS

NO SCALE

C-8

REVISED BY | DATE REVISED
REBECCA IGNACIO | HAMED BAHA
CALCULATED-DESIGNED BY | CHECKED BY
FUNCTIONAL SUPERVISOR
ALBERTO GAYON

STATE OF CALIFORNIA - DEPARTMENT OF TRANSPORTATION
Caltrans
MAINTENANCE

LAST REVISION 01-30-14 | DATE PLOTTED => 26-FEB-2014 | TIME PLOTTED => 07:06

Dist	COUNTY	ROUTE	POST MILES TOTAL PROJECT	SHEET No.	TOTAL SHEETS
11	SD	76	R2.9/R7.5	12	39

Hamed S. Baha 01-15-14
REGISTERED CIVIL ENGINEER DATE

02-24-14
PLANS APPROVAL DATE

REGISTERED PROFESSIONAL ENGINEER HAMED S. BAHA No. 74499 Exp. 12-31-15 CIVIL STATE OF CALIFORNIA

THE STATE OF CALIFORNIA OR ITS OFFICERS OR AGENTS SHALL NOT BE RESPONSIBLE FOR THE ACCURACY OR COMPLETENESS OF SCANNED COPIES OF THIS PLAN SHEET.

NOTES:

1. EXACT LOCATION OF CONSTRUCTION AREA SIGNS WILL BE DETERMINED BY THE ENGINEER.
2. FEDERAL MANUAL ON UNIFORM TRAFFIC CONTROL DEVICES (MUTCD) SIGN CODES ARE SHOWN UNLESS DESIGNATED BY (CA), INDICATING CALIFORNIA MUTCD.
3. EXISTING UTILITIES ARE NOT SHOWN ON THESE PLAN SHEETS. THE CONTRACTOR SHALL VERIFY LOCATIONS OF EXISTING UTILITIES AND ADJUST THE FIELD LOCATION OF SIGN POSTS IN CONSULTATION WITH THE ENGINEER.

TYPICAL PLACEMENT OF TRAFFIC PLASTIC DRUM

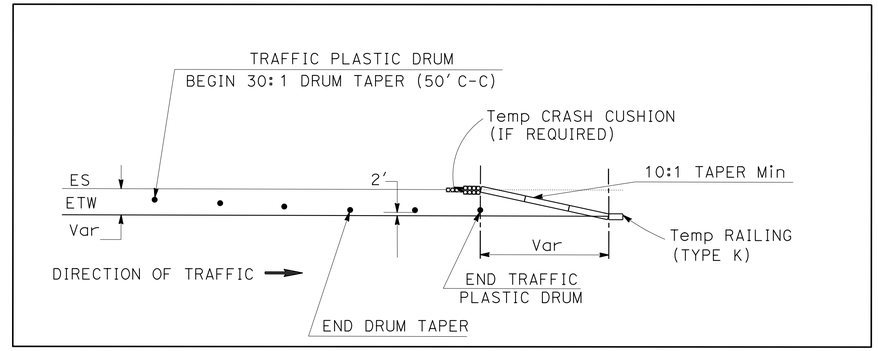

CONSTRUCTION AREA SIGNS

SIGN No.	TYPE	PANEL SIZE (In)x(In)	No. OF POST AND SIZE (In)x(In)	No. OF SIGNS
1	C40 (CA)	108 X 42	2-4 X 6 (S)	2
2	G20-2	48 X 24	1-4 X 4 (S)	16
3	W20-1	48 X 48	1-4 X 6 (S)	16

(S) DENOTES STATIONARY MOUNTED SIGN

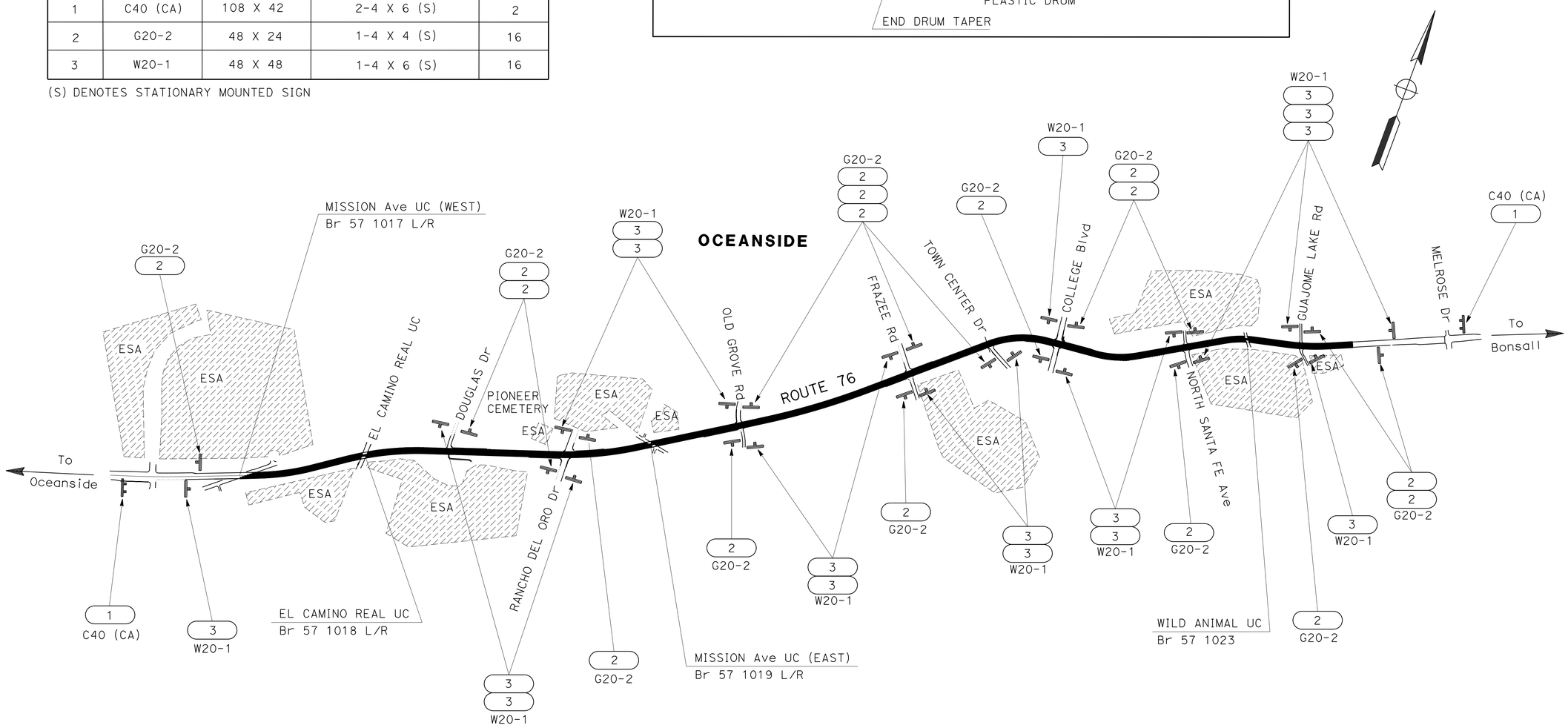

LEGEND:

(X) = CONSTRUCTION AREA SIGNS

APPROVED FOR CONSTRUCTION AREA SIGN WORK ONLY

CONSTRUCTION AREA SIGNS
CS-1

NO SCALE

STATE OF CALIFORNIA - DEPARTMENT OF TRANSPORTATION
Caltrans® TRAFFIC DESIGN

FUNCTIONAL SUPERVISOR: ALBERTO GAYON
CALCULATED-DESIGNED BY: REBECCA IGNACIO
CHECKED BY: ROBERT EDEJER
REVISED BY
DATE REVISED

LAST REVISION 02-06-14
DATE PLOTTED => 26-FEB-2014
TIME PLOTTED => 07:06

Dist	COUNTY	ROUTE	POST MILES TOTAL PROJECT	SHEET No.	TOTAL SHEETS
11	SD	76	R2.9/R7.5	13	39

Hamed S. Baha 01-15-14
REGISTERED CIVIL ENGINEER DATE

02-24-14
PLANS APPROVAL DATE

REGISTERED PROFESSIONAL ENGINEER
HAMED S. BAHA
No. 74499
Exp. 12-31-15
CIVIL
STATE OF CALIFORNIA

THE STATE OF CALIFORNIA OR ITS OFFICERS OR AGENTS SHALL NOT BE RESPONSIBLE FOR THE ACCURACY OR COMPLETENESS OF SCANNED COPIES OF THIS PLAN SHEET.

DETAIL 29 (Mod)

TYPICAL

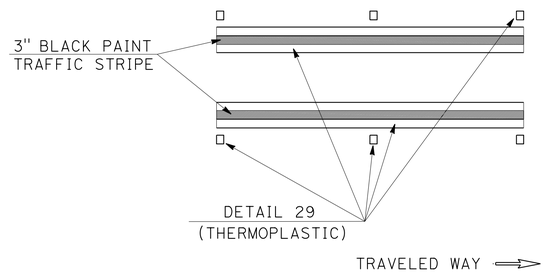

DETAIL 11/13

TYPICAL

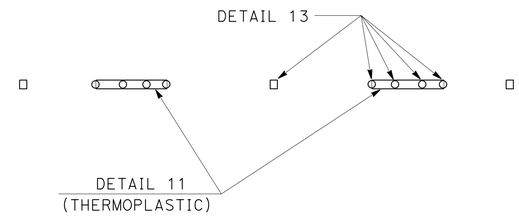

DETAIL 25 (Mod)

TYPICAL

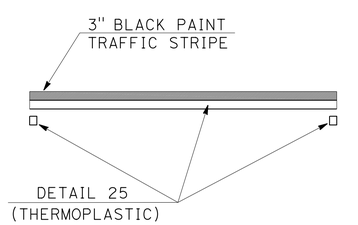

DETAIL 39 (Mod)

TYPICAL

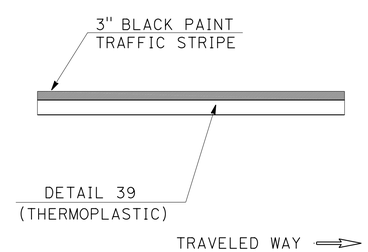

PAVEMENT DELINEATION DETAILS

NO SCALE

PDD-1

STATE OF CALIFORNIA - DEPARTMENT OF TRANSPORTATION
Caltrans® TRAFFIC DESIGN

FUNCTIONAL SUPERVISOR: ALBERTO GAYON
CALCULATED-DESIGNED BY: REBECCA IGNACIO
CHECKED BY: ROBERT EDEJER
REVISED BY
DATE REVISED

LAST REVISION 01-29-14
DATE PLOTTED => 26-FEB-2014
TIME PLOTTED => 07:06

Dist	COUNTY	ROUTE	POST MILES TOTAL PROJECT	SHEET No.	TOTAL SHEETS
11	SD	76	R2.9/R7.5	14	39

Hamed S. Baha 01-15-14
REGISTERED CIVIL ENGINEER DATE

02-24-14
PLANS APPROVAL DATE

REGISTERED PROFESSIONAL ENGINEER HAMED S. BAHA No. 74499 Exp. 12-31-15 CIVIL STATE OF CALIFORNIA

THE STATE OF CALIFORNIA OR ITS OFFICERS OR AGENTS SHALL NOT BE RESPONSIBLE FOR THE ACCURACY OR COMPLETENESS OF SCANNED COPIES OF THIS PLAN SHEET.

NOTES:
1. (*) = SEE PDQ-4, FOR ADDITIONAL QUANTITIES
2. (N) NOT A SEPARATE PAY ITEM, FOR INFORMATION ONLY
3. REPLACE CROSSWALK PAVEMENT MARKINGS AS PER DETAIL B OF REVISED STANDARD PLAN A88A.
4. TRAFFIC STRIPING TO BE REPLACE-IN-KIND, UNLESS OTHERWISE NOTED.
5. (**) AT PM R2.99 TO PM R4.19 AND AT PM R6.22 TO PM R7.50.

REMOVE PAINTED TRAFFIC STRIPE

ROUTE	DIRECTION	** POSTMILE BEGIN	** POSTMILE END	DETAIL	3" BLACK (LF)	4" YELLOW SOLID (LF)	4" WHITE BROKEN (LF)	4" WHITE SOLID (LF)	6" WHITE BROKEN (LF)	6" WHITE SOLID (LF)
76	EB/WB	R2.99	R7.50	11/13			6,305			
				25		17,326				
				25 (Mod)	950	950				
				27B				2,710		
				29 (Mod)	8,299	16,598				
				39					485	
				39 (Mod)	950					
				39A						26,249
				SUB-TOTAL	10,199	34,874	6,305	2,710	485	26,249
				TOTAL	80,822					

REMOVE PAVEMENT MARKER (EA) (N)

ROUTE	DIRECTION	** POSTMILE BEGIN	** POSTMILE END	TYPE A	TYPE D	TYPE G	TYPE H
76	EB/WB	R2.99	R7.50	2,388	358	748	399

REMOVE THERMOPLASTIC TRAFFIC STRIPE

ROUTE	DIRECTION	** POSTMILE BEGIN	** POSTMILE END	DETAIL	LF
76	EB/WB	R2.99	R7.50	38	4,245

PAVEMENT MARKERS AT IRRIGATION CROSSOVER LOCATIONS

ROUTE	DIRECTION	POSTMILES	PAVEMENT MARKERS (NON-REFLECTIVE) (TYPE A) (EA)
76	EB/WB	R3.17; R3.36; R3.55; R3.73; R3.92; R4.15; R4.32; R4.58; R4.71; R4.90; R4.99; R5.09; R5.28; R5.45; R5.64; R5.85; R6.04; R6.26; R6.40; R6.55; R6.75; R6.98; R7.17; R7.36	48 *

REMOVE THERMOPLASTIC PAVEMENT MARKING

ROUTE	DIRECTION	** POSTMILE BEGIN	** POSTMILE END	DETAILS	SQFT
76	EB/WB	R2.99	R7.50	ARROW I (24'); ARROW III-L; ARROW III-R; ARROW V; ARROW VI; CHEVRON; BIKE; LANE; BIKE LANE ARROW; SIGNAL; AHEAD; 1' LIMIT LINE; 1'CROSSWALK LINE	6,741

PAVEMENT DELINEATION QUANTITIES
PDQ-1

NO SCALE

REVISED BY | DATE REVISED
REBECCA IGNACIO | ROBERT EDEJER
CALCULATED-DESIGNED BY | CHECKED BY
FUNCTIONAL SUPERVISOR: ALBERTO GAYON
STATE OF CALIFORNIA - DEPARTMENT OF TRANSPORTATION
Caltrans® TRAFFIC DESIGN

LAST REVISION 02-10-14 | DATE PLOTTED => 26-FEB-2014 | TIME PLOTTED => 07:06

Dist	COUNTY	ROUTE	POST MILES TOTAL PROJECT	SHEET No.	TOTAL SHEETS
11	SD	76	R2.9/R7.5	15	39

Hamed S. Baha 01-15-14
REGISTERED CIVIL ENGINEER DATE

02-24-14
PLANS APPROVAL DATE

REGISTERED PROFESSIONAL ENGINEER HAMED S. BAHA No. 74499 Exp. 12-31-15 CIVIL STATE OF CALIFORNIA

THE STATE OF CALIFORNIA OR ITS OFFICERS OR AGENTS SHALL NOT BE RESPONSIBLE FOR THE ACCURACY OR COMPLETENESS OF SCANNED COPIES OF THIS PLAN SHEET.

THERMOPLASTIC CROSSWALK AND PAVEMENT MARKINGS (ENHANCHED WET NIGHT VISIBILITY)

LOCATION					TYPE												
ROUTE	DESCRIPTION	POSTMILE BEGIN	POSTMILE END	DIR	ARROW I - 24' (SQFT)	ARROW III-L (SQFT)	ARROW III-R (SQFT)	ARROW V (SQFT)	ARROW VI (SQFT)	BIKE LANE ARROW (SQFT)	BIKE (SQFT)	LANE (SQFT)	SIGNAL (SQFT)	AHEAD (SQFT)	1' CROSSWALK (SQFT)	1' LIMIT LINE (SQFT)	REMARKS
76	MISSION Ave UC (WEST) TO EL CAMINO EAL UC	R2.99	R3.39	EB/WB						14	10	12					
	EL CAMINO REAL UC TO DOUGLAS Dr	R3.43	R3.75	EB/WB		252		132		7	5	6	64	62		56	
	DOUGLAS Dr TO RANCHO DEL ORO Dr	R3.75	R4.19	EB/WB		126	252	264		35	25	30	128	124	321		
	JUST WEST OF COLLEGE Blvd TO COLLEGE Blvd	R6.15	R6.21	EB		168	84	198							187		FOR COLD PLANE 0.25' Max WORK ONLY
	COLLEGE Blvd TO NORTH SANTA FE Ave	R6.22	R6.72	EB/WB	93	378	252	231	126	28	20	24	160	155	494	68	
	NORTH SANTA FE Ave TO WILD ANIMAL UC	R6.72	R6.97	EB/WB		126		132		14	10	12	64	62	410		
	WILD ANIMAL UC TO GUAJOME LAKE Rd	R6.97	R7.18	EB/WB		126		132		7	10	12	64	62	247	53	
	GUAJOME LAKE Rd TO END OF PROJECT LIMIT	R7.18	R7.50	EB/WB		126		132		14	10	12	64	62	132	55	
				SUB-TOTALS	93	1,302	588	1,221	126	119	90	108	544	527	1,791	232	
				TOTAL	6,741												

PAVEMENT DELINEATION QUANTITIES
PDQ-2

NO SCALE

STATE OF CALIFORNIA - DEPARTMENT OF TRANSPORTATION
Caltrans TRAFFIC DESIGN

FUNCTIONAL SUPERVISOR: ALBERTO GAYON
CALCULATED-DESIGNED BY: REBECCA IGNACIO
CHECKED BY: ROBERT EDEJER
REVISED BY
DATE REVISED

LAST REVISION 02-10-14 | DATE PLOTTED => 26-FEB-2014 | TIME PLOTTED => 07:06

Dist	COUNTY	ROUTE	POST MILES TOTAL PROJECT	SHEET No.	TOTAL SHEETS
11	SD	76	R2.9/R7.5	16	39

Hamed S. Baha 01-15-14
REGISTERED CIVIL ENGINEER DATE

02-24-14
PLANS APPROVAL DATE

REGISTERED PROFESSIONAL ENGINEER HAMED S. BAHA No. 74499 Exp. 12-31-15 CIVIL STATE OF CALIFORNIA

THE STATE OF CALIFORNIA OR ITS OFFICERS OR AGENTS SHALL NOT BE RESPONSIBLE FOR THE ACCURACY OR COMPLETENESS OF SCANNED COPIES OF THIS PLAN SHEET.

NOTE: (**) = TRAFFIC STRIPE IS FOR DIG-OUTS WORK ONLY.

PAVEMENT DELINEATION QUANTITIES

LOCATION					DETAIL No.	PAVEMENT MARKER SUMMARY			TRAFFIC STRIPE SUMMARY						
						(NON-REFLECTIVE) (EA)	(RETROREFLECTIVE) (EA)		PAINT (LF)	THERMOPLASTIC (LF) (ENHANCED WET NIGHT VISIBILITY)					
ROUTE	DESCRIPTION	POSTMILE BEGIN	POSTMILE END	DIRECTION		TYPE A	TYPE G	TYPE H	3" BLACK SOLID (1-COAT)	4" WHITE BROKEN 36-12	4" WHITE BROKEN 1-6	4" WHITE/ YELLOW SOLID	6" WHITE BROKEN 8-4	6" WHITE SOLID	8" WHITE SOLID
76	MISSION Ave UC (WEST) TO EL CAMINO REAL UC	R2.99	R3.39	EB/WB	11/13	351	89			1,046					
					25			89				4,182			
					39									4,182	
	EL CAMINO REAL BRIDGE	R3.39	R3.43	EB/WB	11/13	42	12			119					
					25 (Mod)			12	475			475			
					39 (Mod)				475					475	
	EL CAMINO REAL UC TO DOUGLAS Dr	R3.43	R3.75	EB/WB	11/13	296	75			881					
					25			69				3,224			
					38		22								520
					39									2,994	
					39A								77		
					40						26				
	DOUGLAS Dr TO RANCHO DEL ORO Dr	R3.75	R4.19	EB/WB	11/13	412	105			1,230					
					25			105				4,921			
					27B							1,382			
					38		26								620
					39									6,302	
					39A								100		
					40						21				
	JUST WEST OF ** COLLEGE Blvd TO COLLEGE Blvd	R6.15	R6.21	EB/WB	11/13	77	21			225					
					25			8				300			
					27B							300			
					38										600
					39									600	
					SUB-TOTALS	1,178	350	283	950	3,501	47	14,784	177	14,553	1,740

SEE PDQ-4 FOR ADDITIONAL PAVEMENT DELINEATION QUANTITIES.

PAVEMENT DELINEATION QUANTITIES
PDQ-3

NO SCALE

REVISED BY | DATE REVISED
REBECCA IGNACIO | ROBERT EDEJER
CALCULATED-DESIGNED BY | CHECKED BY
FUNCTIONAL SUPERVISOR
ALBERTO GAYON

STATE OF CALIFORNIA - DEPARTMENT OF TRANSPORTATION
Caltrans® TRAFFIC DESIGN

LAST REVISION 02-07-14 | DATE PLOTTED => 26-FEB-2014 | TIME PLOTTED => 07:06

Dist	COUNTY	ROUTE	POST MILES TOTAL PROJECT	SHEET No.	TOTAL SHEETS
11	SD	76	R2.9/R7.5	17	39

Hamed S. Baha 01-15-14
REGISTERED CIVIL ENGINEER DATE

02-24-14
PLANS APPROVAL DATE

REGISTERED PROFESSIONAL ENGINEER HAMED S. BAHA No. 74499 Exp. 12-31-15 CIVIL STATE OF CALIFORNIA

THE STATE OF CALIFORNIA OR ITS OFFICERS OR AGENTS SHALL NOT BE RESPONSIBLE FOR THE ACCURACY OR COMPLETENESS OF SCANNED COPIES OF THIS PLAN SHEET.

PAVEMENT DELINEATION QUANTITIES

LOCATION					DETAIL No.	PAVEMENT MARKER SUMMARY			TRAFFIC STRIPE SUMMARY						
ROUTE	DESCRIPTION	POSTMILE BEGIN	POSTMILE END	DIRECTION		(NON-REFLECTIVE) (EA)	(RETROREFLECTIVE) (EA)		PAINT (LF)	THERMOPLASTIC (LF) (ENHANCED WET NIGHT VISIBILITY)					
						TYPE A	TYPE G	TYPE H	3" BLACK SOLID (1-COAT)	4" WHITE (BROKEN 36-12)	4" WHITE (BROKEN 6-1)	4" WHITE/ YELLOW SOLID	6" WHITE (BROKEN 8-4)	6" WHITE SOLID	8" WHITE SOLID
76	COLLEGE Blvd TO NORTH SANTA FE Ave	R6.22	R6.72	EB/WB	11/13	552	137			1,651					
					25			115				5,428			
					27B							1,328			
					38		24								576
					39									6,456	
					39A								100		
					40						61				
	NORTH SANTA FE Ave WILD ANIMAL UC	R6.72	R6.95		11/13	206	53			613					
					25			53				2,450			
					38		23								552
					39									2,220	
					39A								77		
	WILD ANIMAL BRIDGE	R6.95	R6.97		11/13	42				119					
					25 MOD			12	476			475			
					39 MOD				476					475	
	WILD ANIMAL UC TO GUAJOME LAKE Rd	R6.97	R7.18		11/13	189	49			560					
					25			49				2,240			
					38		25								605
					39									2,045	
					39A								65		
	GUAJOME LAKE Rd END OF PROJECT LIMIT	R7.18	R7.50		11/13	110	29			325					
					25			68				3,180			
					38		26								620
					39									1,100	
					39A								67		
SUB-TOTALS						1,099	366	297	952	3,268	61	15,101	309	12,296	2,353
SUB-TOTALS FROM PDQ-3						1,178	350	283	950	3,501	47	14,784	177	14,553	1,740
IRRIGATION CROSS-OVERS FROM PDQ-1						48									
TOTALS						2,325	1,298		1,902	6,769	108	29,885	486	26,849	4,093

PAVEMENT DELINEATION QUANTITIES
PDQ-4

NO SCALE

REVISED BY | DATE REVISED
REBECCA IGNACIO | ROBERT EDEJER
CALCULATED-DESIGNED BY | CHECKED BY
FUNCTIONAL SUPERVISOR
ALBERTO GAYON

STATE OF CALIFORNIA - DEPARTMENT OF TRANSPORTATION
Caltrans® TRAFFIC DESIGN

LAST REVISION 02-10-14 | DATE PLOTTED => 26-FEB-2014 | TIME PLOTTED => 07:06

Dist	COUNTY	ROUTE	POST MILES TOTAL PROJECT	SHEET No.	TOTAL SHEETS
11	SD	76	R2.9/R7.5	18	39

Hamed S. Baha 01-15-14
REGISTERED CIVIL ENGINEER DATE

02-24-14
PLANS APPROVAL DATE

REGISTERED PROFESSIONAL ENGINEER HAMED S. BAHA No. 74499 Exp. 12-31-15 CIVIL STATE OF CALIFORNIA

THE STATE OF CALIFORNIA OR ITS OFFICERS OR AGENTS SHALL NOT BE RESPONSIBLE FOR THE ACCURACY OR COMPLETENESS OF SCANNED COPIES OF THIS PLAN SHEET.

DRAINAGE INLETS

ROUTE	DESCRIPTION	POSTMILE		DRAINAGE INLETS (EA) (N)		
		BEGIN	END	MEDIAN	EASTBOUND	WESTBOUND
76	MISSION Ave UC (WEST) TO EL CAMINO REAL UC	R2.99	R3.39	4	5	5
	EL CAMINO REAL UC TO DOUGLAS Dr	R3.43	R3.75	3	6	2
	DOUGLAS Dr TO RANCHO DEL ORO Dr	R3.75	R4.19	2	9	9
	COLLEGE Blvd TO NORTH SANTA FE Ave	R6.22	R6.72	3	1	5
	NORTH SANTA FE Ave TO WILD ANIMAL UC	R6.72	R6.97	5	4	3
	WILD ANIMAL UC TO GUAJOME LAKE Rd	R6.97	R7.18	2	1	1
	GUAJOME LAKE Rd END OF PROJECT LIMIT	R7.18	R7.50	3	4	4

(N) = NOT A PAY ITEM, FOR WATER POLLUTION CONTROL INFORMATION ONLY.

COLD PLANE AC PAVEMENT

ROUTE	POSTMILE	DIRECTION	LANE No.	DIMENSION (LENGTH X WIDTH) (LF X LF)	COLD PLANE ASPHALT CONCRETE PAVEMENT (SQYD)	HMA (TYPE A) (TON)	REMARKS
76	R3.50	EB	2	12′ X 50′	67	10.8	USE DEPTH 3" = 0.25′ FOR ALL
	R4.24	EB	2	6′ X 40′	27	4.3	
	R4.50	EB	2	12′ X 80′	107	17.2	
	R4.80	EB	1, 2	12′ X 40′ x 2	107	17.2	
	R5.07	EB	2	12′ X 20′	27	4.3	
	R6.16	EB	All	76′ X 300′	2533	409.6	
	R5.95	WB	2	12′ X 20′	27	4.3	
	R7.15	WB	2	12′ X 30′	40	6.5	
				SUB-TOTAL	2,935 **	474.2 ***	

(**) = SEE Q-5 SHEET
(***) = SEE Q-2 SHEET

ASPHALTIC EMULSION (FOG SEAL COAT)

ROUTE	DIRECTION	POSTMILE	DIMENSION (N)		AREA	ASPHALTIC EMULSION (FOG SEAL COAT) (TON)	REMARKS
			AVERAGE WIDTH (LF)	LENGTH (LF)	(SQFT) (N)		
76	WB	R3.71	65	12	780	0.04	MAINTENANCE VEHICLE PULLOUT
	WB	R6.37	65	12	780	0.04	
	WB	R7.01	65	12	780	0.04	
	WB	R7.30	65	12	780	0.04	
					SUB-TOTAL	0.14	
					HMA/AC DIKES (SEE Q-3 SHEET)	1.23	
					RUMBLE STRIPS (SEE Q-2 SHEET)	1.15	
					TOTAL	2.52	

(N) = NOT A PAY ITEM, FOR INFORMATION ONLY.

COLD PLANE AC PAVEMENT TYPICAL CONFORM AT CROSS STREET

ROUTE	DESCRIPTION	POSTMILE	DIRECTION	DIMENSION (LENGTH X WIDTH) (LF X LF)	COLD PLANE ASPHALT CONCRETE PAVEMENT (SQYD)
76	MISSION Ave (WEST) UC	2.99	EB	39′ X 20′	87
			WB	39′ X 20′	87
	EL CAMINO REAL UC	3.39	EB	2 - 42′ X 20′	187
			WB	2 - 42′ X 20′	187
	DOUGLAS DRIVE	3.73	WB	92′ X 8′	82
			WB	125′ X 25′	347
	NORTH SANTA FE Ave	6.71	EB	150′ X 30′	397
			WB	110′ X 35′	428
	WILD ANIMAL UC	6.97	EB	2 - 49′ X 20′	218
			WB	2 - 49′ X 20′	218
	GUAJOME LAKE ROAD	7.17	EB	115′ X 8′	228
			WB	145′ X 8′	129
	END OF PROJECT LIMIT	7.50	EB	39′ X 20′	87
			WB	39′ X 20′	87
				SUB-TOTAL	2,769 *

(*) = SEE Q-5 SHEET

SUMMARY OF QUANTITIES
Q-1

NO SCALE

REVISED BY | DATE REVISED
REBECCA IGNACIO | HAMED BAHA
CALCULATED-DESIGNED BY | CHECKED BY
FUNCTIONAL SUPERVISOR
ALBERTO GAYON

STATE OF CALIFORNIA - DEPARTMENT OF TRANSPORTATION
Caltrans® MAINTENANCE

LAST REVISION 02-06-14 | DATE PLOTTED => 26-FEB-2014 | TIME PLOTTED => 07:06

Dist	COUNTY	ROUTE	POST MILES TOTAL PROJECT	SHEET No.	TOTAL SHEETS
11	SD	76	R2.9/R7.5	19	39

Hamed S. Baha 01-15-14
REGISTERED CIVIL ENGINEER DATE

02-24-14
PLANS APPROVAL DATE

REGISTERED PROFESSIONAL ENGINEER HAMED S. BAHA No. 74499 Exp. 12-31-15 CIVIL STATE OF CALIFORNIA

THE STATE OF CALIFORNIA OR ITS OFFICERS OR AGENTS SHALL NOT BE RESPONSIBLE FOR THE ACCURACY OR COMPLETENESS OF SCANNED COPIES OF THIS PLAN SHEET.

NOTE: (N) = NOT A PAY ITEM, FOR INFORMATION ONLY.
(*) = SEE Q-1 SHEET.

SHOULDER BACKING

ROUTE	DIRECTION	SIDE	POSTMILE		DIMENSION (N)			VOLUME (CF) (N)	WEIGHT (TON)	REMARKS
			BEGIN	END	LENGTH (LF)	WIDTH (LF)	DEPTH (LF)			
76	EB	LEFT SHOULDER	3.00	3.36	1,901	3	0.1	570.30	41.30	
	EB	LEFT SHOULDER	3.86	4.08	1,162	3	0.1	348.60	25.20	
	EB	LEFT SHOULDER	6.50	6.61	581	3	0.1	174.30	12.60	
	EB	RIGHT SHOULDER	7.19	7.30	581	2	0.1	116.20	8.40	
	WB	LEFT SHOULDER	3.43	3.62	792	3	0.1	237.60	21.80	
	WB	LEFT SHOULDER	6.86	6.94	422	3	0.1	126.60	9.20	
	WB	RIGHT SHOULDER	6.98	7.10	634	2	0.1	126.80	9.20	
	WB	LEFT SHOULDER	6.99	7.05	317	3	0.1	95.10	6.90	
	WB	LEFT SHOULDER	7.35	7.50	792	3	0.1	237.60	17.20	
								TOTAL	151.80	

IMPORTED BORROW

ROUTE	DIRECTION	POSTMILE	DIMENSION (L X W X D) (LF X LF X LF) (N)	VOLUME (CUFT) (N)	WEIGHT (TON)	REMARKS
76	EB	R3.66-R3.73	370 X 1.3 X 0.2	96.2	6.2	AC DIKE A TO HMA DIKE D
		R7.05-R7.17	634 X 0.5 X 0.3	95.1	6.2	AC DIKE A TO HMA DIKE E
				TOTAL	12.40	

REPLACE ASPHALT CONCRETE SURFACING

ROUTE	DIRECTION	POSTMILE	DIMENSION (L X W X D) (LF) (N)	ROADWAY EXCAVATION (CY)	BIAXIAL GEOGRID (SQYD)	CLASS 2 AGGREGATE BASE (CY)	HMA (TYPE A) (TON)
76	WB	R7.10	30 X 39 X 1.6	70			
					130		
			30 X 39 X 1.0			44	
			30 X 39 X 0.6				49.9
COLD PLANE AC PAVEMENT (SEE Q-1 SHEET)							474.2
			TOTALS	70	130	44	524.1

SHOULDER RUMBLE STRIPS (HMA, GROUND-IN INDENTATIONS)

ROUTE	DESCRIPTION	DIRECTION	POSTMILE		WIDTH (LF) (N)	LENGTH (STA)	ASPHALTIC EMULSION FOG SEAL COAT (TON)
			BEGIN	END			
76	MISSION Ave UC (WEST) TO EL CAMINO REAL UC	EB/WB Median Shoulder	R2.993	R3.389	1	41.82	0.19
		EB/WB Outside Shoulder	R2.993	R3.389	1	41.82	0.19
	EL CAMINO REAL UC TO DOUGLAS Dr	EB/WB Median Shoulder	R3.434	R3.745	1	32.84	0.15
		EB/WB Outside Shoulder	R3.434	R3.745	1	32.84	0.15
	DOUGLAS Dr TO RANCHO DEL ORO Dr	EB/WB Median Shoulder	R3.745	R4.211	1	49.21	0.23
		EB/WB Outside Shoulder	R3.745	R4.211	1	49.21	0.23
					TOTALS	247.74	1.14 *

SUMMARY OF QUANTITIES
Q-2

NO SCALE

STATE OF CALIFORNIA - DEPARTMENT OF TRANSPORTATION
Caltrans® MAINTENANCE

FUNCTIONAL SUPERVISOR: ALBERTO GAYON
CALCULATED-DESIGNED BY: HAMED BAHA
CHECKED BY: REBECCA IGNACIO
REVISED BY
DATE REVISED

LAST REVISION 02-07-14 | DATE PLOTTED => 26-FEB-2014 | TIME PLOTTED => 07:06

Dist	COUNTY	ROUTE	POST MILES TOTAL PROJECT	SHEET No.	TOTAL SHEETS
11	SD	76	R2.9/R7.5	20	39

Hamed S. Baha 01-15-14
REGISTERED CIVIL ENGINEER DATE

02-24-14
PLANS APPROVAL DATE

REGISTERED PROFESSIONAL ENGINEER HAMED S. BAHA No. 74499 Exp. 12-31-15 CIVIL STATE OF CALIFORNIA

THE STATE OF CALIFORNIA OR ITS OFFICERS OR AGENTS SHALL NOT BE RESPONSIBLE FOR THE ACCURACY OR COMPLETENESS OF SCANNED COPIES OF THIS PLAN SHEET.

ASPHALT CONCRETE DIKES

ROUTE	DIRECTION	POSTMILE		LENGTH (LF)	REMOVE AC DIKE		PLACE HOT MIX ASPHALT DIKE			MINOR HOT MIX ASPHALT (TON)	** RUBBERIZED HMA (BWC-GAP GRADED) (TON)	ASPHALTIC EMULSION MEMBRANE (BWC) (TON)	REMARKS
		BEGIN	END		TYPE	LENGTH (LF)	TYPE (D) (LF)	TYPE (E) (LF)	TYPE (F) (LF)				
76	EB	R3.23	R3.37	750	D							0.053	
	EB	R3.37	R3.38	26	C							0.002	
	EB	R3.38	R3.39	69	F							0.005	
	EB	R3.44	R3.66	1,162	D							0.082	
	EB	R3.66	R3.73	370	A	370	370			20.60	3.42	0.026	
	EB	R3.76	R4.19	2,270	D							0.161	
	EB	R6.28	R6.33	264	E							0.019	
	EB	R6.65	R6.71	317	E							0.022	
	EB	R6.74	R6.96	1,151	D							0.082	
	EB	R6.96	R6.97	63	A							0.004	MBGR; TO BE REPLACED BY OTHER EA
	EB	R6.99	R7.05	317	E							0.022	
	EB	R7.05	R7.17	634	A	634		634		15.66	1.85	0.045	
	EB	R7.32	R7.50	950	E							0.067	
	WB	R3.04	R3.05	26	A							0.002	
	WB	R3.05	R3.06	74	C							0.005	
	WB	R3.06	R3.34	1,478	D							0.105	
	WB	R3.34	R3.39	264	A	264			264	3.31		0.019	
	WB	R3.44	R3.65	1,088	A	1,088			1,088	13.64		0.077	
	WB	R3.65	R3.66	74	C							0.005	
	WB	R3.66	R3.73	370	D							0.026	
	WB	R3.76	R4.19	2,270	D							0.161	
	WB	R6.37	R6.38	58	A							0.004	MBGR; TO BE REPLACED BY OTHER EA
	WB	R6.38	R6.54	845	D							0.060	
	WB	R6.69	R6.71	84	A							0.006	MBGR; TO BE REPLACED BY OTHER EA
	WB	R6.74	R6.83	475	D							0.034	
	WB	R6.83	R6.88	264	A	264	264			14.70	2.35	0.019	
	WB	R7.08	R7.17	475	E								
	WB	R7.19	R7.50	1,637	E							0.116	
					TOTALS	2,620	634	634	1,352	67.91	7.62 *	1.229 *	

(*) = SEE Q-5 SHEET
(**) = AC/HMA EXTENDED LIFT

SUMMARY OF QUANTITIES
NO SCALE

Q-3

STATE OF CALIFORNIA - DEPARTMENT OF TRANSPORTATION
Caltrans
MAINTENANCE

FUNCTIONAL SUPERVISOR: ALBERTO GAYON
CALCULATED-DESIGNED BY: REBECCA IGNACIO
CHECKED BY: HAMED BAHA
REVISED BY
DATE REVISED

LAST REVISION 02-07-14
DATE PLOTTED => 26-FEB-2014
TIME PLOTTED => 07:06

Dist	COUNTY	ROUTE	POST MILES TOTAL PROJECT	SHEET No.	TOTAL SHEETS
11	SD	76	R2.9/R7.5	21	39

Hamed S. Baha 01-15-14
REGISTERED CIVIL ENGINEER DATE

02-24-14
PLANS APPROVAL DATE

REGISTERED PROFESSIONAL ENGINEER HAMED S. BAHA No. 74499 Exp. 12-31-15 CIVIL STATE OF CALIFORNIA

THE STATE OF CALIFORNIA OR ITS OFFICERS OR AGENTS SHALL NOT BE RESPONSIBLE FOR THE ACCURACY OR COMPLETENESS OF SCANNED COPIES OF THIS PLAN SHEET.

LEGEND:
CB = CONCRETE BARRIER
CP = COLD PLANE
IS = INSIDE SHOULDER
OS = OUTSIDE SHOULDER
CG = CURB & GUTTER

COLD PLANE ASPHALT CONCRETE PAVEMENT

ROUTE	DIRECTION	POSTMILE BEGIN	POSTMILE END	LENGTH (LF)	INSIDE SHOULDER WIDTH (LF) (N)	OUTSIDE SHOULDER WIDTH (LF) (N)	COLD PLANE ASPHALT CONCRETE PAVEMENT (SQYD)	REMARKS
76	EB	R2.99	R3.30	1,637		10	1,819	CP TO ES/FL/CB
	EB	R3.30	R3.39	475		9	475	OS=STOP CP 1' AWAY FROM ES/FL
	EB	R3.44	R3.60	845	5	9	1,314	OS=STOP CP 1' AWAY FROM ES/FL
	EB	R3.60	R3.66	317	15	9	845	OS=STOP CP 1' AWAY FROM ES/FL
	EB	R3.66	R3.73	370	15		616	OS = REPLACE 370' AC DIKE (A) TO HMA (E); PM R3.66-R3.73;
	EB	R3.73	R3.76	158		8	141	OS = REPLACE 110' AC DIKE (A) TO HMA (E); PM R3.76-R3.78; CP 8' ETW TO CG/ES
	EB	R3.78	R4.19	2,165		9	2,165	STOP CP 1' AWAY FROM ES/FL; 10' Shld
	EB	R6.22	R6.30	422		7	329	STOP CP 3' AWAY FROM CB/MBGR
	EB	R6.30	R6.58	1,478		10	1,643	20' OS, CP 10' TO FL/ES @ PM 6.34-6.58;
	EB	R6.58	R6.71	686		4	305	CP TO FL; OS=4', CP 4' FROM ETW TO FL/ES;
	EB	R6.74	R6.97	1,214		9	1,214	STOP CP 1' AWAY FROM ES/FL; 10' Shld
	EB	R6.99	R7.05	317		9	317	OS = Replace 640' AC DIKE (A) TO HMA (E); PM R7.05-R7.17; OS=10' Shld, CP 1' AWAY FROM ES/FL
	EB	R7.30	R7.50	1,056		9	1,056	STOP CP 1' AWAY FROM ES/FL; 10' Shld
	WB	R2.99	R3.39	2,112		9	5,397	OS=Stop CP 1' AWAY FROM ES/FL; 10' Shld; IS = CP TO ES/CB, 5'-14' Shld
	WB	R3.44	R3.60	845		9	845	Stop CP 1' AWAY FROM ES/FL; 10' Shld
	WB	R3.60	R3.73	686		9	1,830	OS=Stop CP 1' AWAY FROM ES/FL; 10' Shld; IS = CP to ES/CB, 15' Shld
	WB	R3.76	R3.86	528		9	528	STOP CP 1' AWAY FROM ES/FL; 10' Shld
	WB	R3.86	R4.08	1,162		9	2,969	OS=Stop CP 1' AWAY FROM ES/FL; 10' Shld; IS = CP TO ES/CB, 14' Shld
	WB	R4.08	R4.23	792		9	792	OS=STOP CP 1' AWAY FROM ES/FL; 10' Shld;
	WB	R4.08	R4.19	581	14	9	581	STOP CP 1' AWAY FROM ES/FL; 10' Shld
	WB	R6.22	R6.36	739		4	329	CP TO FL; OS=4', CP 4' FROM ETW TO FL/ES/CB;
	WB	R6.36	R6.54	950	15	9	950	STOP CP 1' AWAY FROM ES/FL; 10' Shld
	WB	R6.54	R6.71	898		10	997	CP TO ES/FL/CB/MBGR
	WB	R6.74	R6.88	739	14	9	739	OS=REPLACE 270' AC DIKE (A) TO HMA (D) @ PM 6.83-6.88;
	WB	R6.88	R6.96	422		10	469	CP TO ES/FL/CB
	WB	R7.08	R7.17	475		9	475	STOP CP 1' AWAY FROM ES/FL; 10' Shld
	WB	R7.19	R7.50	1,637		9	1,637	STOP CP 1' AWAY FROM ES/FL; 10' Shld
						SUB-TOTAL	30,777 *	

(*) = SEE Q-5 SHEET

SUMMARY OF QUANTITIES
Q-4

NO SCALE

STATE OF CALIFORNIA - DEPARTMENT OF TRANSPORTATION
Caltrans® MAINTENANCE

FUNCTIONAL SUPERVISOR: ALBERTO GAYON
CALCULATED-DESIGNED BY: REBECCA IGNACIO
CHECKED BY: HAMED S. BAHA
REVISED BY
DATE REVISED

LAST REVISION 02-06-14 DATE PLOTTED => 26-FEB-2014 TIME PLOTTED => 07:06

Dist	COUNTY	ROUTE	POST MILES TOTAL PROJECT	SHEET No.	TOTAL SHEETS
11	SD	76	R2.9/R7.5	22	39

Hamed S. Baha 01-15-14
REGISTERED CIVIL ENGINEER DATE

02-24-14
PLANS APPROVAL DATE

REGISTERED PROFESSIONAL ENGINEER HAMED S. BAHA No. 74499 Exp. 12-31-15 CIVIL STATE OF CALIFORNIA

THE STATE OF CALIFORNIA OR ITS OFFICERS OR AGENTS SHALL NOT BE RESPONSIBLE FOR THE ACCURACY OR COMPLETENESS OF SCANNED COPIES OF THIS PLAN SHEET.

ROADWAY QUANTITIES

ROUTE	DIRECTION	POSTMILE BEGIN	POSTMILE END	LENGTH (LF) (N)	MAIN LANES WIDTH (LF) (N)	OUTSIDE SHOULDER WIDTH (LF) (N)	INSIDE SHOULDER WIDTH (LF) (N)	AREA (SQFT) (N)	VOLUME (CY) (N)	COLD PLANE ASPHALT CONCRETE PAVEMENT (SQYD)	RUBBERIZED HMA (BWC-GAP GRADED) (TON)	ASPHALTIC EMULSION MEMBRANE (BWC) (TON)	REMARKS
76	EB	R2.99	R3.39	2,112	24	10	4	80,256.00	297.24	3,285	571	8.2	START AT THE END OF THE BRIDGE
		R3.39	R3.44	264	42	-	-	-	-	-	-	-	STRIPE WORK ONLY. PM=3.41 BRIDGE LOG
		R3.44	R3.60	845	24	10	5	32,947.20	122.03	1,408	234	3.4	
		R3.60	R3.73	686	51	10	16	52,852.80	195.75	1,983	376	5.4	
		R3.73	R3.76	158	138			21,859.20	80.96	-	155	2.2	SEE COLD PLANE - CROSS St.
		R3.76	R4.05	1,531	24	10	5	59,716.80	221.17	2,552	425	6.1	
		R4.05	R4.19	739	52	10	5	49,526.40	183.43	1,232	352	5.0	
		R6.22	R6.34	634	36	10	6	32,947.20	122.03	1,126	234	3.4	6' LEVEL MEDIAN
		R6.34	R6.58	1,267	30	20	5	69,696.00	258.13	3,520	496	7.1	
		R6.58	R6.71	686	54	4	5	43,243.20	160.16	686	308	4.4	
		R6.71	R6.74	158	150	-	-	23,760.00	88.00	-	169	2.4	SEE COLD PLANE - CROSS St.
		R6.74	R6.97	1,214	24	10	5	47,361.60	175.41	2,024	337	4.8	
		R6.97	R6.99	106	116	-	-	-	-	-	-	-	STRIPE WORK ONLY. PM=R7.00 BRIDGE LOG
		R6.99	R7.05	317	24	10	25	18,691.20	69.23	1,232	133	1.9	
		R7.05	R7.17	634	36	10	5	32,313.60	119.68	1,056	230	3.3	
		R7.17	R7.19	106	110	-	-	11,616.00	43.02	-	83	1.2	SEE COLD PLANE - CROSS St.
		R7.19	R7.28	475	24	10	5	18,532.80	68.64	792	132	1.9	
		R7.28	R7.50	1,162	24	10	5	45,302.40	167.79	1,936	322	4.6	
	WB	R2.99	R3.39	2,112	24	10	14	101,376.00	375.47	5,632	721	10.3	START AT THE END OF BRIDGE
		R3.39	R3.44	264	42	-	-	-	-	-	-	-	
		R3.44	R3.60	845	24	10	5	32,947.20	122.03	1,408	234	3.4	STRIPE WORK ONLY. PM=R3.41 BRIDGE LOG
		R3.60	R3.73	702	24	10	15	34,409.76	127.44	1,951	245	3.5	
		R3.73	R3.76	158	138	-	-	21,859.20	80.96	-	155	2.2	SEE COLD PLANE - CROSS St.
		R3.76	R3.86	528	24	10	5	20,592.00	76.27	880	146	2.1	
		R3.86	R4.08	1,162	24	10	14	55,756.80	206.51	3,098	396	5.7	
		R4.08	R4.19	581	24	10	5	22,651.20	83.89	968	161	2.3	
		R6.22	R6.36	739	78	4	0	60,614.40	224.50	329	431	6.2	6' LEVEL MEDIAN = SEE EB
		R6.36	R6.50	739	36	10	5	37,699.20	139.63	1,232	268	3.8	
		R6.50	R6.71	1,109	24	10	5	43,243.20	160.16	1,848	308	4.4	
		R6.71	R6.74	158	150	-	-	23,760.00	88.00	-	169	2.4	SEE COLD PLANE - CROSS St.
		R6.74	R6.86	634	36	10	5	32,313.60	119.68	1,056	230	3.3	
		R6.86	R6.96	528	24	10	5	20,592.00	76.27	880	146	2.1	STRIPE WORK ONLY. PM=R7.00 BRIDGE LOG
		R6.96	R6.98	106	116	-	-	-	-	-	-	-	
		R6.98	R7.17	1,003	24	10	5	39,124.80	144.91	1,672	278	4.0	
		R7.17	R7.19	106	110	-	-	11,616.00	43.02	-	83	1.2	SEE COLD PLANE - CROSS St.
		R7.19	R7.32	686	36	10	5	35,006.40	129.65	1,144	249	3.6	
		R7.32	R7.50	950	24	10	5	37,065.60	137.28	1,584	264	3.8	
SUB-TOTALS										46,514	9,041	129.6	
AC / HMA DIKE (EXTENDED LIFT) (SEE Q-3 SHEET)										-	7.6	1.2	
COLD PLANE SHOULDERS (SEE Q-4 SHEET)										30,777	1970	28.2	
COLD PLANE AC PAVEMENT - CROSS STREET and CONFORM (0.0'-0.1' MAX) (SEE Q-1 SHEET)										2,769	177	2.5	
COLD PLANE AC PAVEMENT (0.25' MAX) (SEE Q-1 SHEET)										2,935	-	-	SEE HMA (Type A) QUANTITIES
TOTAL										82,995	11,196	161.5	

SUMMARY OF QUANTITIES
Q-5

NO SCALE

REVISED BY | DATE REVISED
REBECCA IGNACIO | HAMED BAHA
CALCULATED-DESIGNED BY | CHECKED BY
FUNCTIONAL SUPERVISOR
ALBERTO GAYON
STATE OF CALIFORNIA - DEPARTMENT OF TRANSPORTATION
Caltrans
MAINTENANCE

LAST REVISION 02-10-14
DATE PLOTTED => 26-FEB-2014
TIME PLOTTED => 07:06

Dist	COUNTY	ROUTE	POST MILES TOTAL PROJECT	SHEET No.	TOTAL SHEETS
11	SD	76	R2.9/R7.5	23	39

Mahendra R. Nirmal 01-16-14
REGISTERED ELECTRICAL ENGINEER DATE

02-24-14
PLANS APPROVAL DATE

REGISTERED PROFESSIONAL ENGINEER
MAHENDRA R. NIRMAL
No. E 10689
Exp. 06-30-15
ELECTRICAL
STATE OF CALIFORNIA

THE STATE OF CALIFORNIA OR ITS OFFICERS OR AGENTS SHALL NOT BE RESPONSIBLE FOR THE ACCURACY OR COMPLETENESS OF SCANNED COPIES OF THIS PLAN SHEET.

NOTES:

1 - AB Exist DETECTOR LOOPS, REPLACE WITH TYPE E DETECTOR LOOPS.

2 - ALL DETECTOR LOOPS TO BE INSTALLED SHALL BE PLACED IN THE CENTER OF THE TRAVELED LANE PER DETAIL "A".

INDUCTIVE LOOP DETECTOR

Loc NO.	Rte	POST MILE	LOCATION DESCRIPTION	FACILITIES	DIRECTION	LOCATION OF INDUCTIVE LOOP DETECTORS (N) CENTERED IN LANE: TYPE E FRONT DETECTOR LOOPS (EA) 1 — LEFT TURN (*) #1	LEFT TURN (*) #2	THROUGH LANE (*) #1	THROUGH LANE (*) #2	THROUGH LANE (*) #3/OLA	THROUGH LANE (*) #4/OLA	TYPE E ADVANCE LOOP DETECTORS (EA) (*) 1 #1	#2	#3	NOTES	INDUCTIVE LOOP DETECTOR (EA)	DISTANCE FROM LIMIT LINE TO ADVACE LOOPS IN FOOT	REMARKS
1	76	R3.745	DOUGLAS DRIVE	SIGNAL P3.746	EB							1(2-14-RT)	1(2-13-RT)		1 2	2	405	TYPE E LOOPS, CENTER IN LINE
2	76	R3.745	DOUGLAS DRIVE	SIGNAL P3.746	WB							1(6-8-R†)	1(6-7-R†)		1 2	2	405	TYPE E LOOPS, CENTER IN LINE
3	76	R4.211	RANCHO DEL ORO DRIVE	SIGNAL P4.212	EB							1(2-8-R†)	1(2-7-R†)		1 2	2	405	TYPE E LOOPS, CENTER IN LINE
4	76	R6.207	COLLEGE BOULEVARD	SIGNAL P6.142	WB							1(6-18-RT)	1(6-17-RT)		1 2	2	405	TYPE E LOOPS, CENTER IN LINE
5	78	R6.721	NORTH SANTA FE AVENUE	SIGNAL P6.771	EB	1(5-3-RT)CS						1(2-2-RT) 1(2-19-RT)CS	1(2-1-RT) 1(2-18-RT)CS	1(6-25-RT)CS	1 2	5	405	TYPE E LOOPS, CENTER IN LINE
6	76	R6.721	NORTH SANTA FE AVENUE	SIGNAL P6.771	WB	1(1-14-RT)CS						1(6-13-RT) 1(6-9-RT)CS	1(6-12-RT) 1(6-8-RT)CS	1(2-26-RT)CS	1 2	5	405	TYPE E LOOPS, CENTER IN LINE
7	76	R7.177	GUAJOME LAKE ROAD	SIGNAL P7.213	EB													TYPE E LOOPS, CENTER IN LINE
8	76	R7.177	GUAJOME LAKE ROAD	SIGNAL P7.213	WB							1(6-4-RT)	1(6-3-RT)		1 2	2	405	TYPE E LOOPS, CENTER IN LINE
															TOTAL	20		

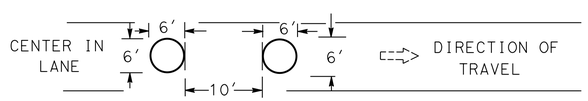

DETAIL 'A'

TYPICAL TYPE E LOOP PLACEMENT
NO SCALE
NOTE: POSITION OF LOOPS TO BE CENTERED IN LANE

* - LOOP IDENTIFICATION: 1(2-4-R†)
- QUANTITY OF LOOPS
- TRAFFIC PHASE IDENTIFICATION
- LOOP NUMBER
- TERMINATION LOCATION FOR PULL BOX IN DIRECTION OF TRAVEL

APPROVED FOR ELECTRICAL WORK ONLY

INDUCTIVE LOOP DETECTOR

NO SCALE

E-1

EA 2M6701 | REV 1 05/17/13
REVISED BY | DATE REVISED
MAHENDRA R. NIRMAL | HECTOR SANTAMARIA
CALCULATED-DESIGNED BY | CHECKED BY
FUNCTIONAL SUPERVISOR | PAJPREET SINGH
STATE OF CALIFORNIA - DEPARTMENT OF TRANSPORTATION
Caltrans® TRAFFIC ELECTRICAL

LAST REVISION 02-13-14 | DATE PLOTTED => 26-FEB-2014 | TIME PLOTTED => 07:06

M

Maint	MAINTENANCE
Max	MAXIMUM
MB	METAL BEAM
MBB	METAL BEAM BARRIER
MBGR	METAL BEAM GUARD RAILING
Med	MEDIAN
MGS	MIDWEST GUARDRAIL SYSTEM
MH	MANHOLE
Min	MINIMUM
Misc	MISCELLANEOUS
Misc I & S	MISCELLANEOUS IRON AND STEEL
Mkr	MARKER
Mod	MODIFIED,
	MODIFY
Mon	MONUMENT
MP	METAL PLATE
MPGR	METAL PLATE GUARD RAILING
MR	MOVEMENT RATING
MSE	MECHANICALLY STABILIZED EMBANKMENT
Mt	MOUNTAIN, MOUNT
Mtl	MATERIAL
MVP	MAINTENANCE VEHICLE PULLOUT

N

N	NORTH
NB	NORTHBOUND
No.	NUMBER (MUST HAVE PERIOD)
Nos.	NUMBERS (MUST HAVE PERIOD)
NPS	NOMINAL PIPE SIZE
NS	NEAR SIDE
NSP	NEW STANDARD PLAN
NTS	NOT TO SCALE

O

Oblr	OBLITERATE
OC	OVERCROSSING
OD	OUTSIDE DIAMETER
OF	OUTSIDE FACE
OG	ORIGINAL GROUND
OGAC	OPEN GRADED ASPHALT CONCRETE
OGFC	OPEN GRADED FRICTION COURSE
OH	OVERHEAD
OHWM	ORDINARY HIGH WATER MARK
O-O	OUT TO OUT
Opp	OPPOSITE
OSD	OVERSIDE DRAIN

P

P	PAGE
PAP	PERFORATED ALUMINUM PIPE
PB	PULL BOX
PC	POINT OF CURVATURE,
	PRECAST
PCC	POINT OF COMPOUND CURVE,
	PORTLAND CEMENT CONCRETE
PCMS	PORTABLE CHANGEABLE MESSAGE SIGN
PCP	PERFORATED CONCRETE PIPE,
	PRESTRESSED CONCRETE PIPE
PCVC	POINT OF COMPOUND VERTICAL CURVE
PEC	PERMIT TO ENTER AND CONSTRUCT
Ped	PEDESTRIAN
Ped OC	PEDESTRIAN OVERCROSSING
Ped UC	PEDESTRIAN UNDERCROSSING
Perm Mtl	PERMEABLE MATERIAL

P continued

PG	PROFILE GRADE
PI	POINT OF INTERSECTION
PJP	PARTIAL JOINT PENETRATION
Pkwy	PARKWAY
ℙ,PL	PLATE
P/L	PROPERTY LINE
PM	POST MILE,
	TIME FROM NOON TO MIDNIGHT
PN	PAVING NOTCH
POC	POINT OF HORIZONTAL CURVE
POT	POINT OF TANGENT
POVC	POINT OF VERTICAL CURVE
PP	PIPE PILE,
	PLASTIC PIPE,
	POWER POLE
PPL	PREFORMED PERMEABLE LINER
PPP	PERFORATED PLASTIC PIPE
PRC	POINT OF REVERSE CURVE
PRF	PAVEMENT REINFORCING FABRIC
PRVC	POINT OF REVERSE VERTICAL CURVE
PS&E	PLANS, SPECIFICATIONS AND ESTIMATES
PS, P/S	PRESTRESSED
PSP	PERFORATED STEEL PIPE
PT	POINT OF TANGENCY
PVC	POLYVINYL CHLORIDE
Pvmt	PAVEMENT

Q

Qty	QUANTITY

R

R	RADIUS
R & D	REMOVE AND DISPOSE
R & S	REMOVE AND SALVAGE
R/C	RATE OF CHANGE
RCA	REINFORCED CONCRETE ARCH
RCB	REINFORCED CONCRETE BOX
RCP	REINFORCED CONCRETE PIPE
RCPA	REINFORCED CONCRETE PIPE ARCH
Rd	ROAD
Reinf	REINFORCED,
	REINFORCEMENT,
	REINFORCING
Rel	RELOCATE
Repl	REPLACEMENT
Ret	RETAINING
Rev	REVISED, REVISION
Rdwy	ROADWAY
RHMA	RUBBERIZED HOT MIX ASPHALT
Riv	RIVER
RM	ROAD-MIXED
RP	RADIUS POINT,
	REFERENCE POINT
RR	RAILROAD
RSP	ROCK SLOPE PROTECTION,
	REVISED STANDARD PLAN
Rt	RIGHT
Rte	ROUTE
RW	REDWOOD,
	RETAINING WALL
R/W	RIGHT OF WAY
Rwy	RAILWAY

S

S	SOUTH,
	SUPPLEMENT
SAE	STRUCTURE APPROACH EMBANKMENT
Salv	SALVAGE
SAPP	STRUCTURAL ALUMINUM PLATE PIPE
SB	SOUTHBOUND
SC	SAND CUSHION
SCSP	SLOTTED CORRUGATED STEEL PIPE
SD	STORM DRAIN
Sec	SECOND,
	SECTION
Sep	SEPARATION
SG	SUBGRADE
Shld	SHOULDER
Sht	SHEET
Sim	SIMILAR
℄	STATION LINE
SM	SELECTED MATERIAL
Spec	SPECIAL,
	SPECIFICATIONS
SPP	SLOTTED PLASTIC PIPE
SS	SLOPE STAKE
SSBM	STRAP AND SADDLE BRACKET METHOD
SSD	STRUCTURAL SECTION DRAIN
SSPA	STRUCTURAL STEEL PLATE ARCH
SSPP	STRUCTURAL STEEL PLATE PIPE
SSPPA	STRUCTURAL STEEL PLATE PIPE ARCH
SSRP	STEEL SPIRAL RIB PIPE
St	STREET
Sta	STATION
STBB	SINGLE THRIE BEAM BARRIER
Std	STANDARD
Str	STRUCTURE
Surf	SURFACING
SW	SIDEWALK,
	SOUND WALL
Swr	SEWER
Sym	SYMMETRICAL
S4S	SURFACE 4 SIDES

T

T	SEMI-TANGENT
Tan	TANGENT
TBB	THRIE BEAM BARRIER
Tbr	TIMBER
TC	TOP OF CURB
TCB	TRAFFIC CONTROL BOX
TCE	TEMPORARY CONSTRUCTION EASEMENT
Tel	TELEPHONE
Temp	TEMPORARY
TG	TOP OF GRADE
Tot	TOTAL
TP	TELEPHONE POLE
TPB	TREATED PERMEABLE BASE
TPM	TREATED PERMEABLE MATERIAL
Trans	TRANSITION

T continued

TS	TRANSVERSE,
	TRAFFIC SIGNAL,
	TUBULAR STEEL
Typ	TYPICAL

U

UC	UNDERCROSSING
UD	UNDERDRAIN
UG	UNDERGROUND
UON	UNLESS OTHERWISE NOTED
UP	UNDERPASS

V

V	VALVE,
	DESIGN SPEED
Var	VARIABLE,
	VARIES
VC	VERTICAL CURVE
VCP	VITRIFIED CLAY PIPE
Vert	VERTICAL
Via	VIADUCT
Vol	VOLUME

W

W	WEST,
	WIDTH
WB	WESTBOUND
WH	WEEP HOLE
WM	WIRE MESH
WS	WATER SURFACE
WSP	WELDED STEEL PIPE
Wt	WEIGHT
WV	WATER VALVE
WW	WINGWALL
WWLOL	WINGWALL LAYOUT LINE

X

X Sec	CROSS SECTION
Xing	CROSSING

Y

Yr	YEAR
Yrs	YEARS

Dist	COUNTY	ROUTE	POST MILES TOTAL PROJECT	SHEET No.	TOTAL SHEETS
11	SD	76	R2.9/R7.5	24	39

Grace M. Tsushima
REGISTERED CIVIL ENGINEER

July 19, 2013
PLANS APPROVAL DATE

REGISTERED PROFESSIONAL ENGINEER
Grace M. Tsushima
No. C49814
Exp. 9-30-14
CIVIL
STATE OF CALIFORNIA

THE STATE OF CALIFORNIA OR ITS OFFICERS OR AGENTS SHALL NOT BE RESPONSIBLE FOR THE ACCURACY OR COMPLETENESS OF SCANNED COPIES OF THIS PLAN SHEET.

TO ACCOMPANY PLANS DATED 02-24-14

UNIT OF MEASUREMENT SYMBOLS:

Some of the symbols used in the project plan quantity tables and in the Bid Item List are:

TABLE A

SYMBOL USED	DEFINITIONS
ACRE	ACRE
CF	CUBIC FOOT
CY	CUBIC YARD
EA	EACH
GAL	GALLON
LB	POUND
LF	LINEAR FOOT
SQFT	SQUARE FOOT
SQYD	SQUARE YARD
STA	100 FEET
TAB	TABLET
TON	2,000 POUNDS

Some of the symbols used in the plans other than in the project plan quantity tables are:

TABLE B

SYMBOL USED	DEFINITIONS
ksi	KIPS PER SQUARE INCH
ksf	KIPS PER SQUARE FOOT
psi	POUNDS PER SQUARE INCH
psf	POUNDS PER SQUARE FOOT
lb/ft^3, pcf	POUNDS PER CUBIC FOOT
tsf	TONS PER SQUARE FOOT
mph, MPH *	MILES PER HOUR
ø	NOMINAL DIAMETER
oz	OUNCE
lb	POUND
kip	1,000 POUNDS
cal	CALORIE
ft	FOOT OR FEET
gal	GALLON

* For use on a sign panel only

STATE OF CALIFORNIA
DEPARTMENT OF TRANSPORTATION

ABBREVIATIONS (SHEET 2 OF 2)

NO SCALE

RSP A10B DATED JULY 19, 2013 SUPERSEDES STANDARD PLAN A10B DATED MAY 20, 2011 - PAGE 2 OF THE STANDARD PLANS BOOK DATED 2010.

REVISED STANDARD PLAN RSP A10B

2010 REVISED STANDARD PLAN RSP A10B

6-7-13

Dist	COUNTY	ROUTE	POST MILES TOTAL PROJECT	SHEET No.	TOTAL SHEETS
11	SD	76	R2.9/R7.5	25	39

REGISTERED CIVIL ENGINEER

April 20, 2012
PLANS APPROVAL DATE

REGISTERED PROFESSIONAL ENGINEER
Roberta L. McLaughlin
No. C40375
Exp. 3-31-13
CIVIL
STATE OF CALIFORNIA

THE STATE OF CALIFORNIA OR ITS OFFICERS OR AGENTS SHALL NOT BE RESPONSIBLE FOR THE ACCURACY OR COMPLETENESS OF SCANNED COPIES OF THIS PLAN SHEET.

TO ACCOMPANY PLANS DATED 02-24-14

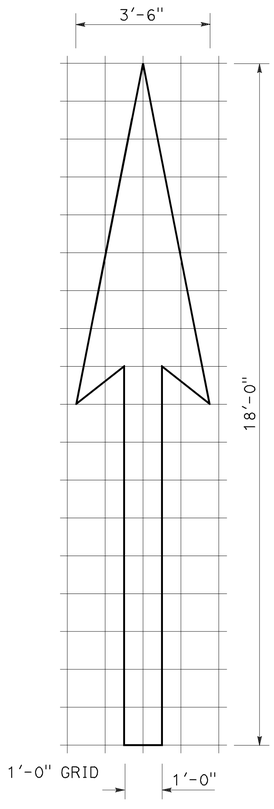

A=25 ft^2

TYPE I 18'-0" ARROW

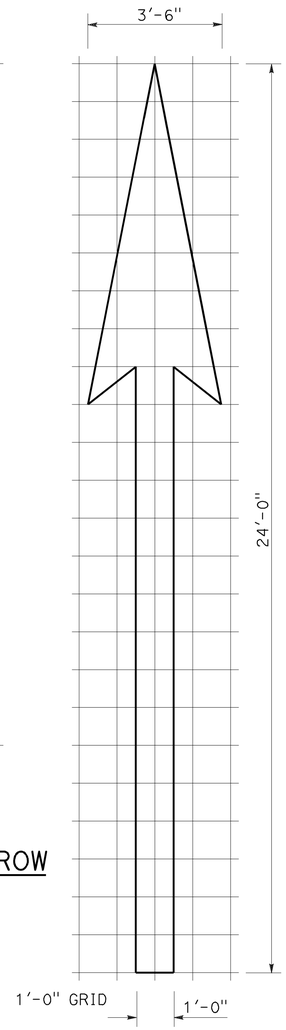

A=31 ft^2

TYPE I 24'-0" ARROW

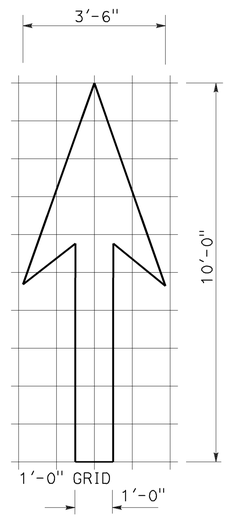

A=14 ft^2

TYPE I 10'-0" ARROW

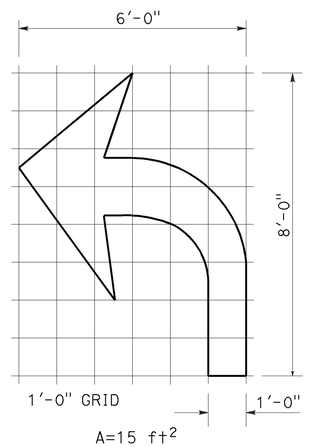

A=15 ft^2

TYPE IV (L) ARROW

(For Type IV (R) arrow, use mirror image)

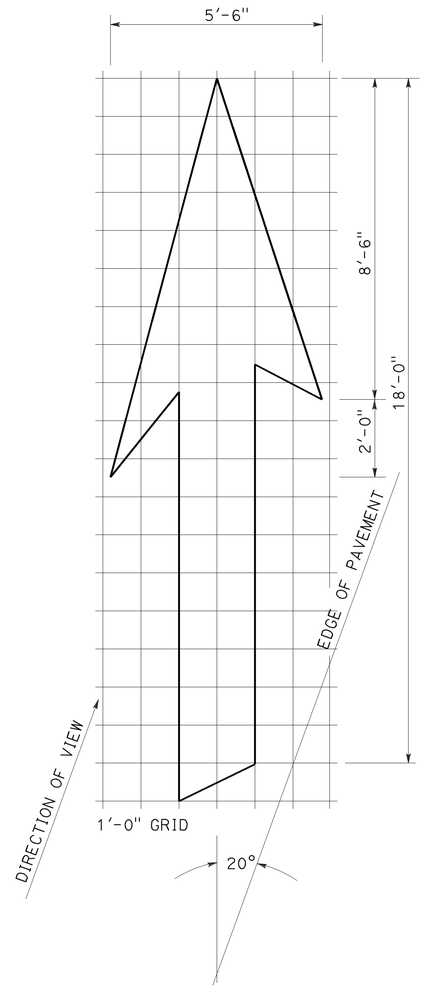

A=42 ft^2

TYPE VI ARROW

Right lane drop arrow
(For left lane, use mirror image)

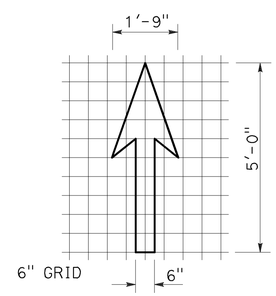

A=3.5 ft^2

BIKE LANE ARROW

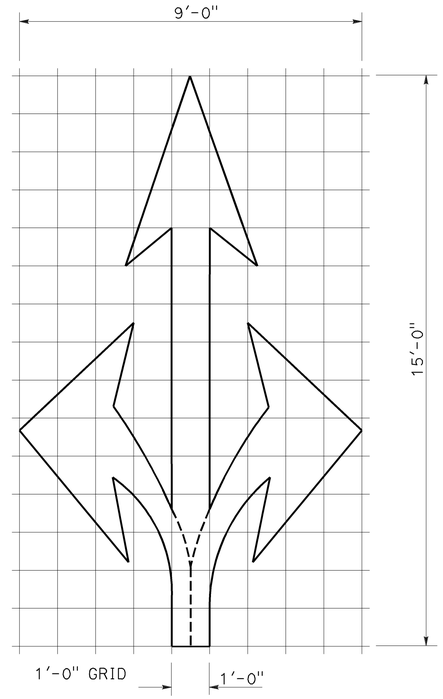

A=36 ft^2

TYPE VIII ARROW

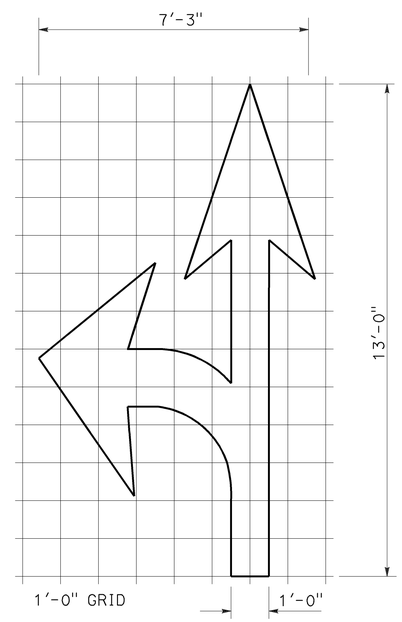

A=27 ft^2

TYPE VII (L) ARROW

(For Type VII (R) arrow, use mirror image)

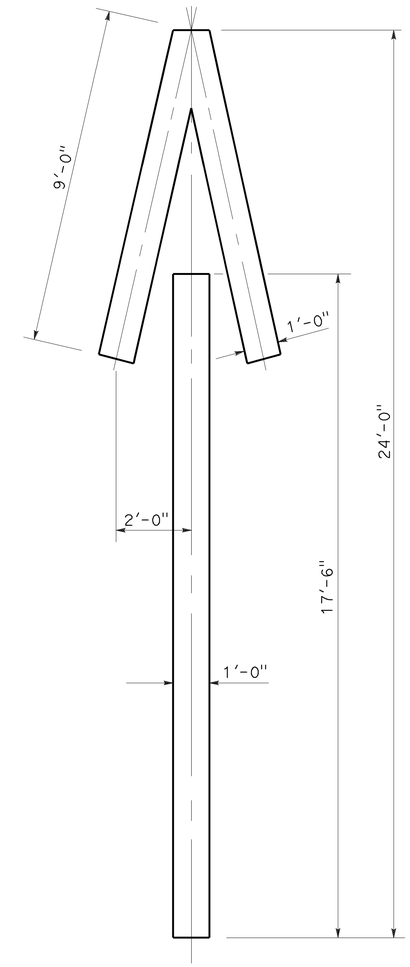

A=33 ft^2

TYPE V ARROW

NOTE:
Minor variations in dimensions may be accepted by the Engineer.

STATE OF CALIFORNIA
DEPARTMENT OF TRANSPORTATION

PAVEMENT MARKINGS ARROWS

NO SCALE

RSP A24A DATED APRIL 20, 2012 SUPERSEDES STANDARD PLAN A24A DATED MAY 20, 2011 - PAGE 13 OF THE STANDARD PLANS BOOK DATED 2010.

REVISED STANDARD PLAN RSP A24A

2010 REVISED STANDARD PLAN RSP A24A

3-14-12

Dist	COUNTY	ROUTE	POST MILES TOTAL PROJECT	SHEET No.	TOTAL SHEETS
11	SD	76	R2.9/R7.5	26	39

REGISTERED CIVIL ENGINEER

July 20, 2012
PLANS APPROVAL DATE

REGISTERED PROFESSIONAL ENGINEER
Roberta L. McLaughlin
No. C40375
Exp. 3-31-13
CIVIL
STATE OF CALIFORNIA

THE STATE OF CALIFORNIA OR ITS OFFICERS OR AGENTS SHALL NOT BE RESPONSIBLE FOR THE ACCURACY OR COMPLETENESS OF SCANNED COPIES OF THIS PLAN SHEET.

TO ACCOMPANY PLANS DATED 02-24-14

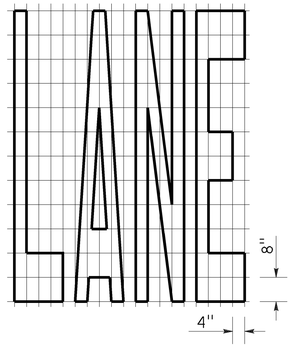

A=24 ft^2

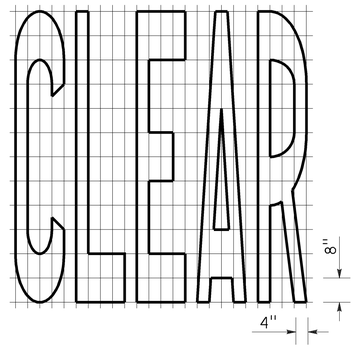

A=27 ft^2

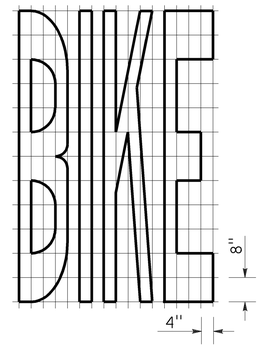

A=21 ft^2

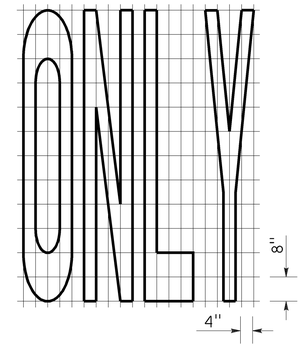

A=22 ft^2

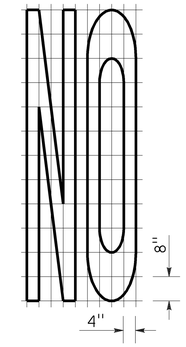

A=14 ft^2

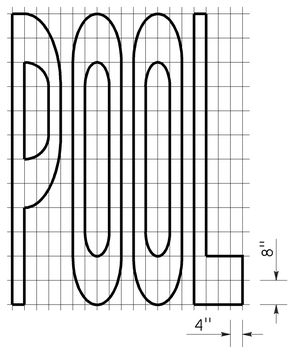

A=23 ft^2

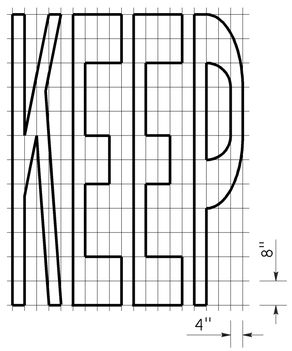

A=24 ft^2

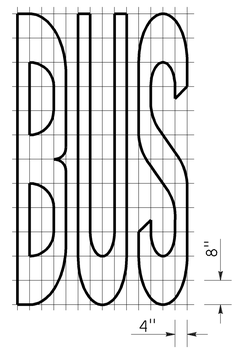

A=20 ft^2

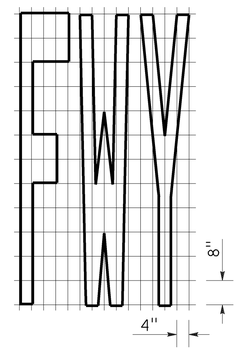

A=16 ft^2

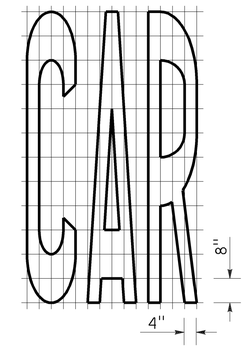

A=17 ft^2

WORD MARKINGS			
ITEM	ft^2	ITEM	ft^2
LANE	24	NO	14
POOL	23	BIKE	21
CAR	17	BUS	20
CLEAR	27	ONLY	22
KEEP	24	FWY	16

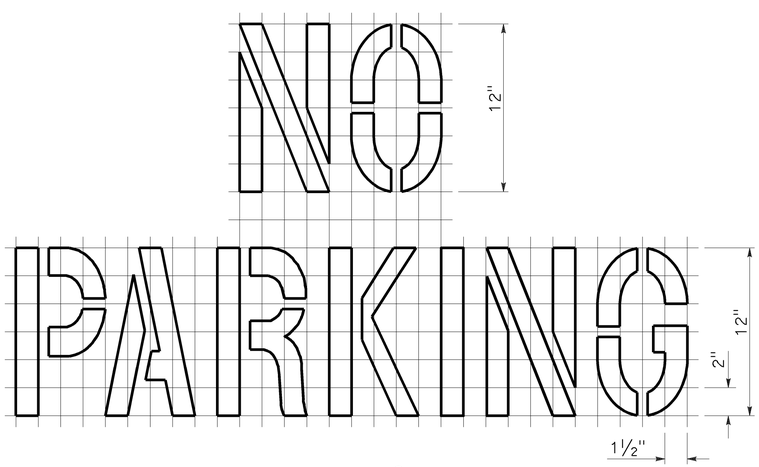

A=2 ft^2
See Notes 6 and 7

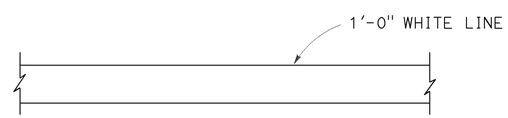

LIMIT LINE (STOP LINE)

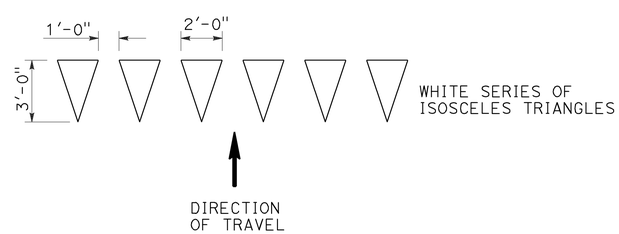

YIELD LINE

NOTES:

1. If a message consists of more than one word, it should read "UP", i.e., the first word should be nearest the driver.
2. The space between words should be at least four times the height of the characters for low speed roads, but not more than ten times the height of the characters. The space may be reduced appropriately where there is limited space because of local conditions.
3. Minor variations in dimensions may be accepted by the Engineer.
4. Portions of a letter, number or symbol may be separated by connecting segments not to exceed 2" in width.
5. The words "NO PARKING" pavement marking is to be used for parking facilities. For typical locations of markings, see Standard Plans A90A and A90B.
6. The words "NO PARKING", shall be painted in white letters no less than 1'-0" high on a contrasting background and located so that it is visible to traffic enforcement officials.

STATE OF CALIFORNIA
DEPARTMENT OF TRANSPORTATION

PAVEMENT MARKINGS WORDS, LIMIT AND YIELD LINES

NO SCALE

RSP A24E DATED JULY 20, 2012 SUPERSEDES STANDARD PLAN A24E
DATED MAY 20, 2011 - PAGE 17 OF THE STANDARD PLANS BOOK DATED 2010.

REVISED STANDARD PLAN RSP A24E

2010 REVISED STANDARD PLAN RSP A24E

6-12-12

Dist	COUNTY	ROUTE	POST MILES TOTAL PROJECT	SHEET No.	TOTAL SHEETS
11	SD	76	R2.9/R7.5	27	39

Roberta L. McLaughlin
REGISTERED CIVIL ENGINEER

July 20, 2012
PLANS APPROVAL DATE

REGISTERED PROFESSIONAL ENGINEER
Roberta L. McLaughlin
No. C40375
Exp. 3-31-13
CIVIL
STATE OF CALIFORNIA

THE STATE OF CALIFORNIA OR ITS OFFICERS OR AGENTS SHALL NOT BE RESPONSIBLE FOR THE ACCURACY OR COMPLETENESS OF SCANNED COPIES OF THIS PLAN SHEET.

TO ACCOMPANY PLANS DATED 02-24-14

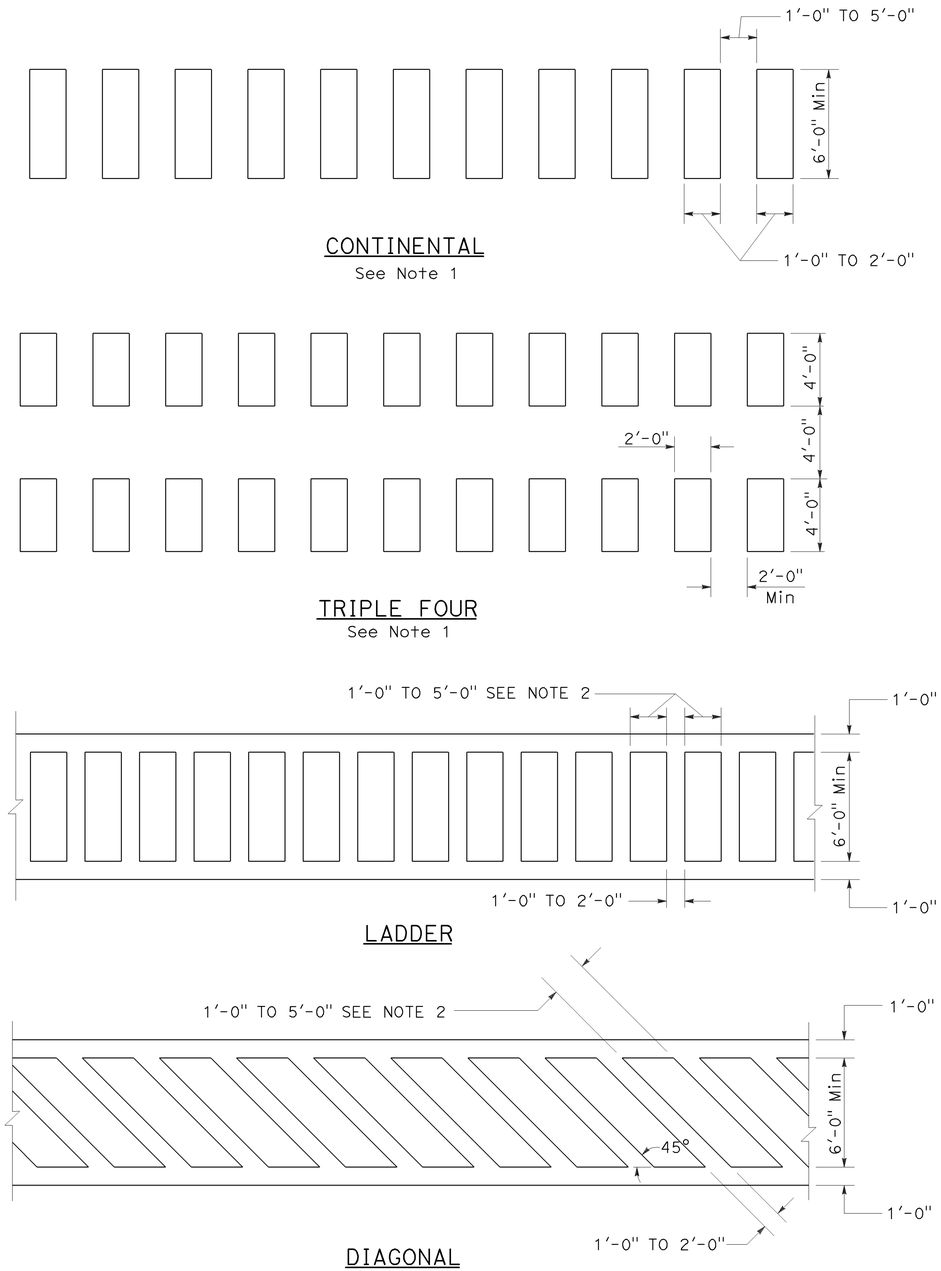

HIGHER VISIBILITY CROSSWALKS

NOTES:

1. Spaces between markings should be placed in wheel tracks of each lane.
2. Spacings not to exceed 2.5 times width of longitudinal line.
3. All crosswalk markings must be white except for those near schools must be yellow.

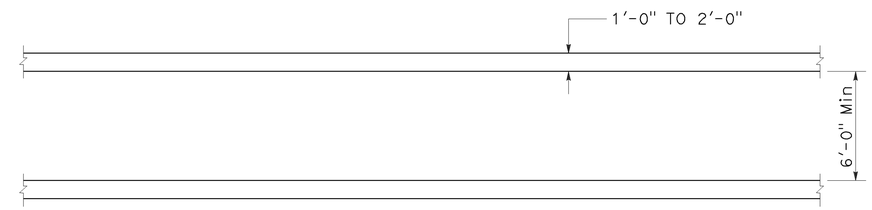

BASIC

STATE OF CALIFORNIA
DEPARTMENT OF TRANSPORTATION

PAVEMENT MARKINGS CROSSWALKS

NO SCALE

RSP A24F DATED JULY 20, 2012 SUPPLEMENTS THE STANDARD PLANS BOOK DATED 2010.

REVISED STANDARD PLAN RSP A24F

2010 REVISED STANDARD PLAN RSP A24F

6-28-12

Dist	COUNTY	ROUTE	POST MILES TOTAL PROJECT	SHEET No.	TOTAL SHEETS
11	SD	76	R2.9/R7.5	28	39

REGISTERED CIVIL ENGINEER

July 19, 2013
PLANS APPROVAL DATE

REGISTERED PROFESSIONAL ENGINEER
Michael Janzen
No. 44788
Exp. 03-31-14
CIVIL
STATE OF CALIFORNIA

THE STATE OF CALIFORNIA OR ITS OFFICERS OR AGENTS SHALL NOT BE RESPONSIBLE FOR THE ACCURACY OR COMPLETENESS OF SCANNED COPIES OF THIS PLAN SHEET.

TO ACCOMPANY PLANS DATED 02-24-14

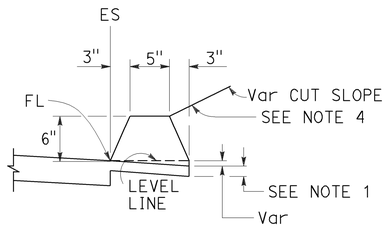

TYPE A
See Note 3

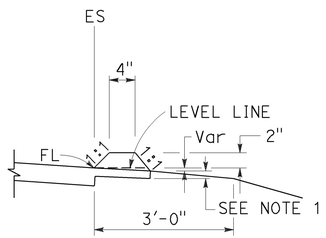

TYPE C

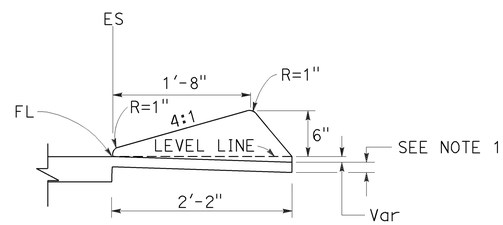

TYPE D

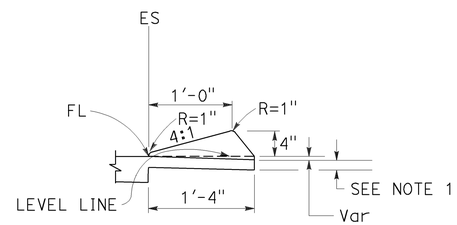

TYPE E

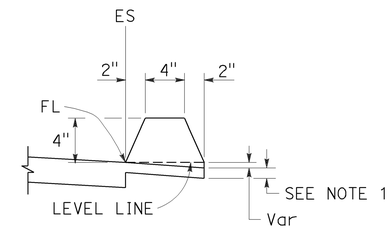

TYPE F
See Note 5

DIKES

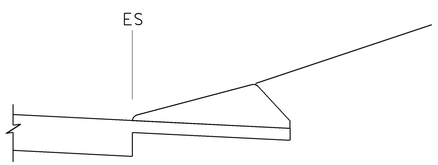

CASE C-1
Cut Slope

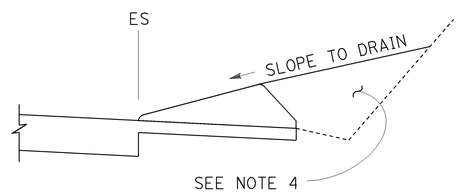

CASE C-2
Cut Slope

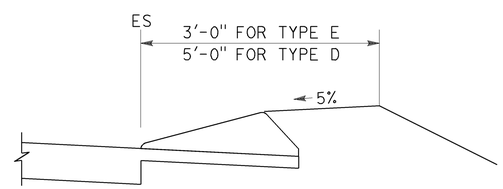

CASE F

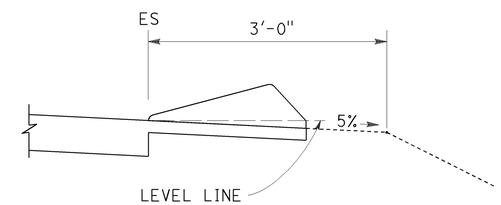

CASE R
See Note 2

TYPE D AND E BACKFILL DETAILS

NOTES:

1. For HMA shoulders only, extend top layer of HMA placed on the shoulder under dike with no joint at the ES. For projects with OGFC shoulders, do not extend OGFC under dike. See project plans for modified dike detail.
2. Case R applies to retrofit only projects where restrictive conditions do not provide enough width for Case F backfill.
3. Type A dike only to be used where restrictive slope conditions do not provide enough width to use Type D or Type E dike.
4. Fill and compact with excavated material to top of dike.
5. Use Type F dike, where dike is required with guard railing installations. See Revised Standard Plan RSP A77N4 for dike positioning details.

DIKE QUANTITIES

TYPE	CUBIC YARDS PER LINEAR FOOT
A	0.0135
C	0.0038
D	0.0293
E	0.0130
F	0.0066

Quantities based on 5% cross slope.

STATE OF CALIFORNIA
DEPARTMENT OF TRANSPORTATION

HOT MIX ASPHALT DIKES

NO SCALE

RSP A87B DATED JULY 19, 2013 SUPERSEDES STANDARD PLAN A87B DATED MAY 20, 2011 - PAGE 120 OF THE STANDARD PLANS BOOK DATED 2010.

REVISED STANDARD PLAN RSP A87B

2010 REVISED STANDARD PLAN RSP A87B

6-27-13

Dist	COUNTY	ROUTE	POST MILES TOTAL PROJECT	SHEET No.	TOTAL SHEETS
11	SD	76	R2.9/R7.5	29	39

REGISTERED CIVIL ENGINEER

July 19, 2013
PLANS APPROVAL DATE

REGISTERED PROFESSIONAL ENGINEER Hector David Cordova No. C41957 Exp. 3-31-14 CIVIL STATE OF CALIFORNIA

THE STATE OF CALIFORNIA OR ITS OFFICERS OR AGENTS SHALL NOT BE RESPONSIBLE FOR THE ACCURACY OR COMPLETENESS OF SCANNED COPIES OF THIS PLAN SHEET.

TO ACCOMPANY PLANS DATED 02-24-14

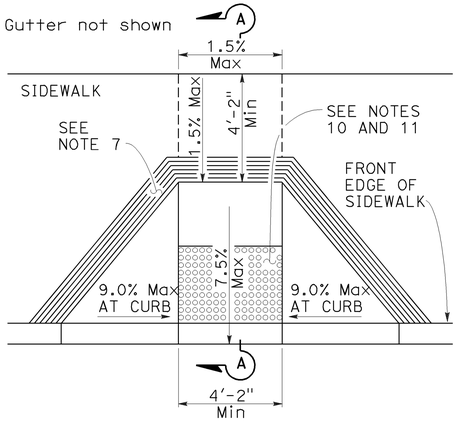

CASE A

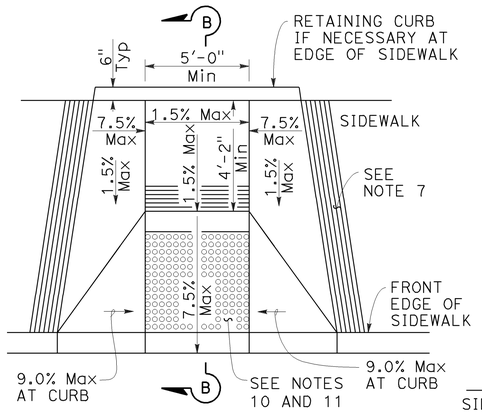

CASE B

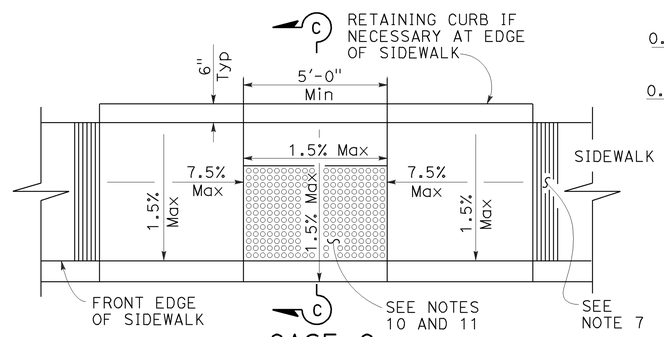

CASE C

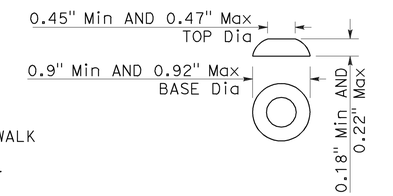

RAISED TRUNCATED DOME

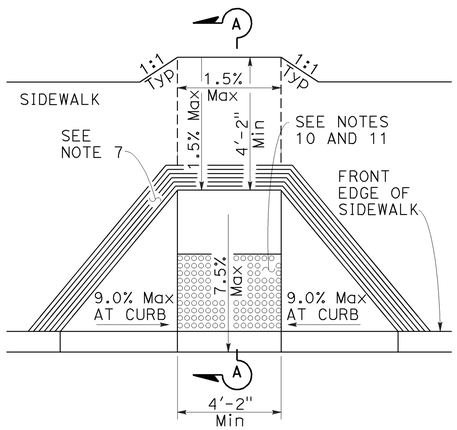

CASE D

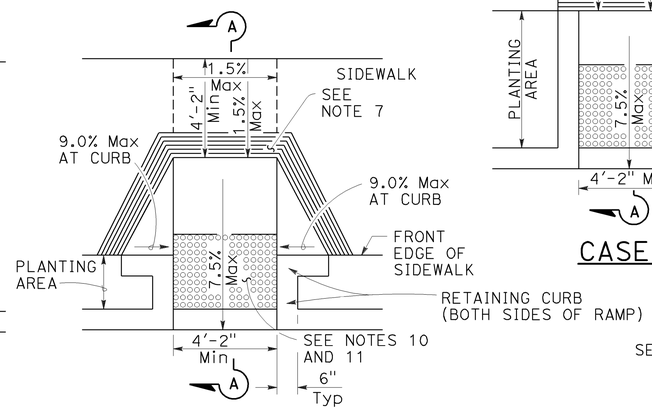

CASE E

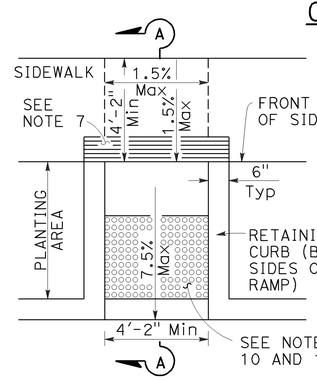

CASE F

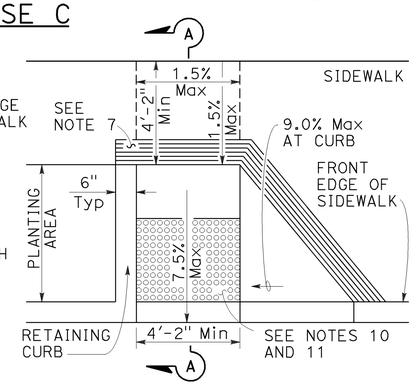

CASE G

See Note 4

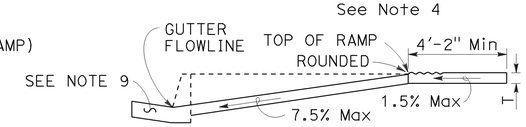

SECTION A-A

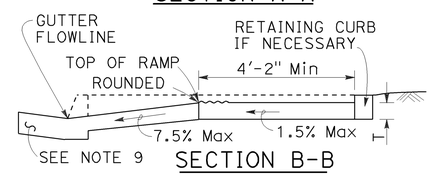

SECTION B-B

Depress entire sidewalk as required

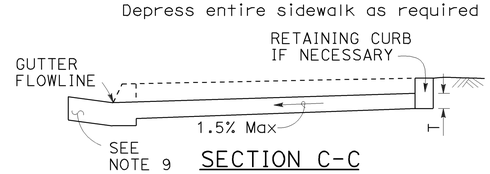

SECTION C-C

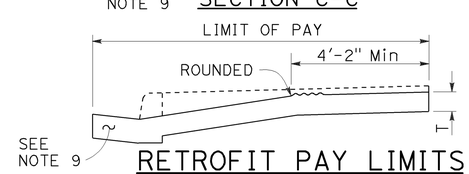

RETROFIT PAY LIMITS

Existing curb and sidewalk

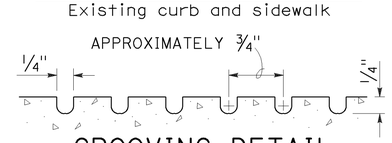

GROOVING DETAIL

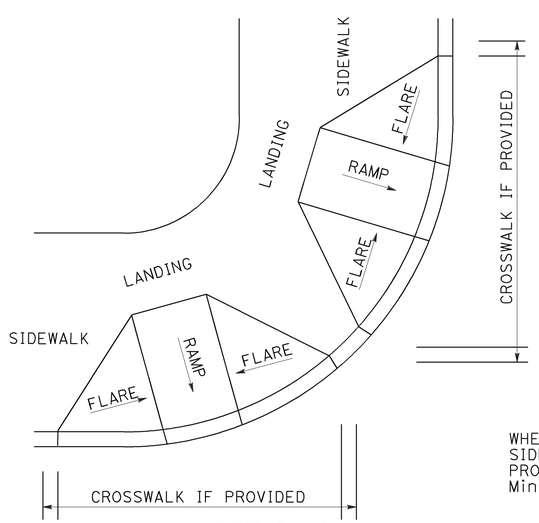

DETAIL A

TYPICAL TWO-RAMP CORNER INSTALLATION

See Note 1

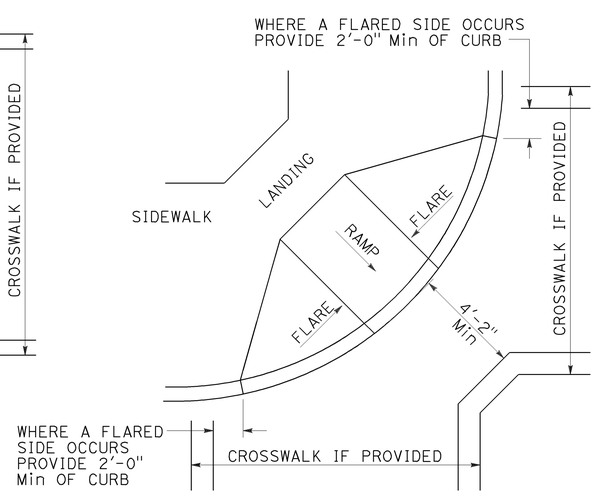

DETAIL B

TYPICAL ONE-RAMP CORNER INSTALLATION

See Notes 1 and 3

NOTES:

1. As site conditions dictate, Case A through Case G curb ramps may be used for corner installations similar to those shown in Detail A and Detail B. The case of curb ramps used in Detail A do not have to be the same. Case A through Case G curb ramps also may be used at mid block locations, as site conditions dictate.
2. If distance from curb to back of sidewalk is too short to accommodate ramp and 4'-2" platform (landing) as shown in Case A, the sidewalk may be depressed longitudinally as in Case B, or C or may be widened as in Case D.
3. When ramp is located in center of curb return, crosswalk configuration must be similar to that shown for Detail B.
4. As site conditions dictate, the retaining curb side and the flared side of the Case G ramp shall be constructed in reversed position.
5. If located on a curve, the sides of the ramp need not be parallel, but the minimum width of the ramp shall be 4'-2".
6. Side slope of ramp flares vary uniformly from a maximum of 9.0% at curb to conform with longitudinal sidewalk slope adjacent to top of the ramp, except in Case C and Case F.
7. The curb ramp shall be outlined, as shown, with a 1'-0" wide border with 1/4" grooves approximately 3/4" on center. See grooving detail.
8. Transitions from ramps and landing to walks, gutters or streets shall be flush (no lip) and free of abrupt changes.
9. Counter slopes of adjoining gutters and road surfaces immediately adjacent to and within 24 inches of the curb ramp shall not be steeper than 1:20 (5.0%). Gutter pan slope shall not exceed 1" of depth for each 2'-0" of width.
10. Curb ramps shall have a detectable warning surface that extends the full width and 3'-0" depth of the ramp. Detectable Warning Surfaces shall conform to the details on this plan and the requirements in the Standard Specifications.
11. The edge of the detectable warning surface nearest the street shall be between 6" and 8" from the gutter flowline.
12. Sidewalk and ramp thickness, "T", shall be 3 1/2" minimum.
13. Utility pull boxes, manholes, vaults and all other utility facilities within the boundaries of the curb ramp will be relocated or adjusted to grade by the owner prior to, or in conjunction with, curb ramp construction.
14. Detectable warning surface may have to be cut to allow removal of utility covers while maintaining full detectable warning width and depth.

RAISED TRUNCATED DOME PATTERN (IN-LINE)

DETECTABLE WARNING SURFACE

See Note 10

STATE OF CALIFORNIA
DEPARTMENT OF TRANSPORTATION

CURB RAMP DETAILS

NO SCALE

RSP A88A DATED JULY 19, 2013 SUPERSEDES STANDARD PLAN A88A
DATED MAY 20, 2011 - PAGE 121 OF THE STANDARD PLANS BOOK DATED 2010.

REVISED STANDARD PLAN RSP A88A

2010 REVISED STANDARD PLAN RSP A88A

7-8-13

DIST	COUNTY	ROUTE	POST MILES TOTAL PROJECT	SHEET No.	TOTAL SHEETS
11	SD	76	R2.9/R7.5	30	39

REGISTERED CIVIL ENGINEER

January 20, 2012
PLANS APPROVAL DATE

REGISTERED PROFESSIONAL ENGINEER Cornelis M. Hakim No. C55610 Exp. 12-31-12 CIVIL STATE OF CALIFORNIA

THE STATE OF CALIFORNIA OR ITS OFFICERS OR AGENTS SHALL NOT BE RESPONSIBLE FOR THE ACCURACY OR COMPLETENESS OF SCANNED COPIES OF THIS PLAN SHEET.

TO ACCOMPANY PLANS DATED 02-24-14

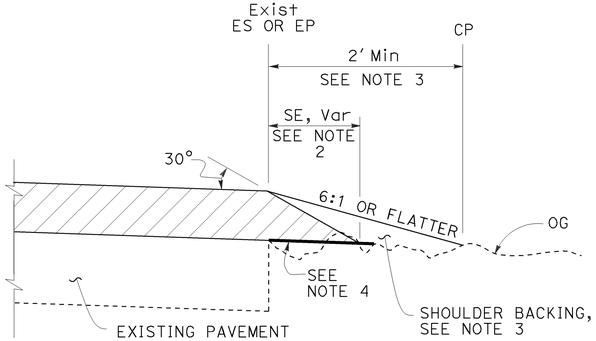

CASE A
Safety Edge

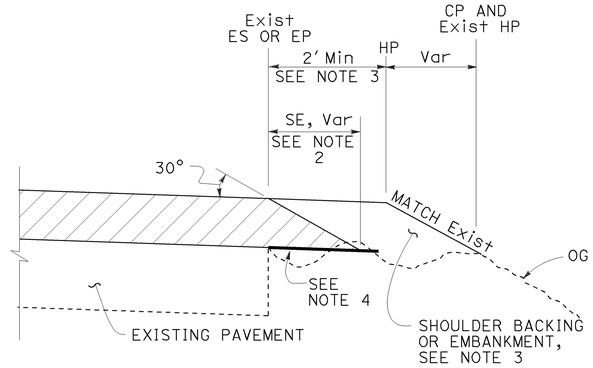

CASE B
Safety Edge

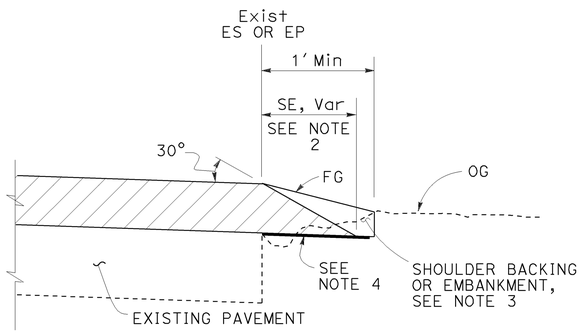

CASE C
Safety Edge

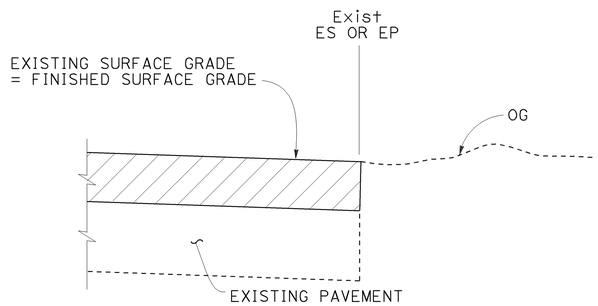

CASE D
Vertical Edge

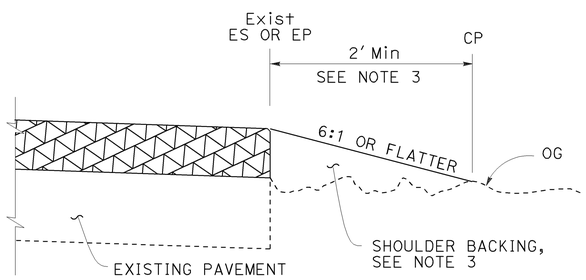

CASE E
Vertical Edge

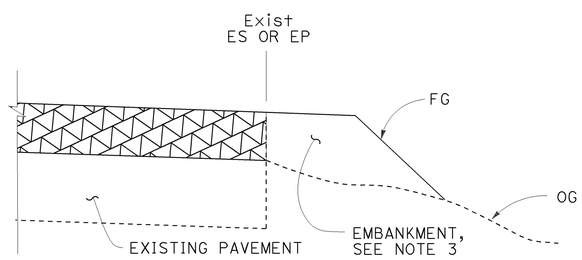

CASE F
Vertical Edge
* See Table A and Revised Std Plan RSP P74

LEGEND:

- HMA OVERLAY
- HMA OR CONCRETE OVERLAY
- CONCRETE OVERLAY

ABBREVIATIONS:

SE SAFETY EDGE
TT TOTAL THICKNESS OF SE

TABLE A
EDGE TREATMENT FOR VARIOUS OVERLAY THICKNESS AND CONDITIONS

	OVERLAY THICKNESS	
FIELD CONDITION	LESS THAN 0.15'	0.15' OR MORE
Exist SLOPE 6:1 OR FLATTER	CASE E	CASE A
Exist SLOPE 3:1 TO 6:1	CASE E	CASE B
Exist SLOPE STEEPER THAN 3:1	CASE F	CASE F
CUT SECTION (REPLACE, COLD PLANE, MILL PAVEMENT)	CASE D	CASE C

ADDITIONAL HMA OR CONCRETE QUANTITIES FOR SE/SIDE/MILE

TYPICAL CROSS SECTION	TT	TOTAL ADDITIONAL MATERIAL FOR SE/SIDE/MILE		
		HMA (TON)	CONCRETE (CY)*	CONCRETE (CY)**
TT	0.15'	NA	NA	NA
	0.20'	13.7	NA	NA
	0.30'	30.9	NA	NA
	0.40'	54.9	NA	NA
	0.45'	69.4	NA	NA
TT 0.43'	0.50'	84.2	NA	NA
	0.60'	113.9	NA	NA
	0.70'	143.6	70.9	94.2
	0.80'	173.3	85.6	112.2
	0.90'	203.0	100.3	130.2
	1.00'	232.7	114.9	148.2
	1.10'	262.4	129.6	166.2
	1.20'	292.1	144.3	184.2

* For Detail "A"
** For Optional Detail "A"

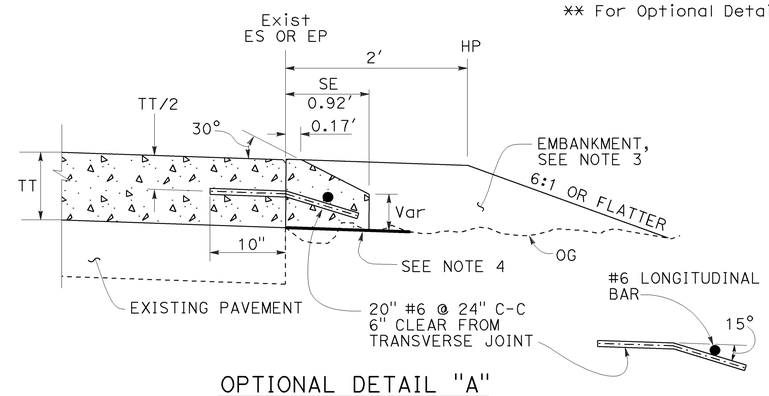

OPTIONAL DETAIL "A"
For concrete overlay
See Note 5

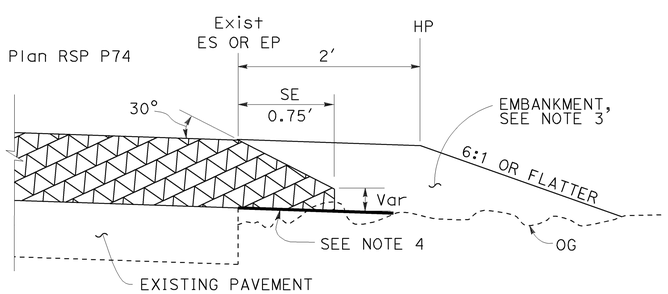

DETAIL "A"
For HMA overlay thickness more than 0.43' or concrete overlay

NOTES:

1. For limits of safety edge and vertical edge treatments, see Revised Standard Plan RSP P74.
2. Details shown for HMA overlay thickness less than 0.43'. See Detail "A" for HMA overlay thickness more than 0.43' or concrete overlay.
3. For locations and limits of shoulder backing or embankment see project plans.
4. Grade existing ground to place safety edge. 1' minimum width
5. Safety edge transverse joint must match overlay transverse joint. End of #6 longitudinal bar must be 2" ±½" clear from transverse joint.
6. Safety edge is not needed in the area of MBGR, barrier, right turn lane and acceleration lane. See Revised Standard Plan RSP P74.

STATE OF CALIFORNIA
DEPARTMENT OF TRANSPORTATION

PAVEMENT EDGE TREATMENTS-OVERLAYS

NO SCALE

RSP P75 DATED JANUARY 20, 2012 SUPPLEMENTS THE STANDARD PLANS BOOK DATED 2010.

REVISED STANDARD PLAN RSP P75

2010 REVISED STANDARD PLAN RSP P75

Dist	COUNTY	ROUTE	POST MILES TOTAL PROJECT	SHEET No.	TOTAL SHEETS
11	SD	76	R2.9/R7.5	31	39

REGISTERED CIVIL ENGINEER

July 19, 2013
PLANS APPROVAL DATE

REGISTERED PROFESSIONAL ENGINEER
Gurinderpal Bhullar
No. C48815
Exp. 9-30-14
CIVIL
STATE OF CALIFORNIA

THE STATE OF CALIFORNIA OR ITS OFFICERS OR AGENTS SHALL NOT BE RESPONSIBLE FOR THE ACCURACY OR COMPLETENESS OF SCANNED COPIES OF THIS PLAN SHEET.

TO ACCOMPANY PLANS DATED 02-24-14

2010 REVISED STANDARD PLAN RSP T9

TABLE 1

TAPER LENGTH CRITERIA AND CHANNELIZING DEVICE SPACING

SPEED (S)	MINIMUM TAPER LENGTH * FOR WIDTH OF OFFSET 12 FEET (W)				MAXIMUM CHANNELIZING DEVICE SPACING		
					X	Y	Z **
	TANGENT 2L	MERGING L	SHIFTING L/2	SHOULDER L/3	TAPER	TANGENT	CONFLICT
mph	ft	ft	ft	ft	ft	ft	ft
20	160	80	40	27	20	40	10
25	250	125	63	42	25	50	12
30	360	180	90	60	30	60	15
35	490	245	123	82	35	70	17
40	640	320	160	107	40	80	20
45	1080	540	270	180	45	90	22
50	1200	600	300	200	50	100	25
55	1320	660	330	220	55	110	27
60	1440	720	360	240	60	120	30
65	1560	780	390	260	65	130	32
70	1680	840	420	280	70	140	35

* - For other offsets, use the following merging taper length formula for L:
For speed of 40 mph or less, $L = WS^2/60$
For speed of 45 mph or more, $L = WS$

Where: L = Taper length in feet
W = Width of offset in feet
S = Posted speed limit, off-peak 85th-percentile speed prior to work starting, or the anticipated operating speed in mph

** - Use for taper and tangent sections where there are no pavement markings or where there is a conflict between existing pavement markings and channelizers (CA).

TABLE 2

LONGITUDINAL BUFFER SPACE AND FLAGGER STATION SPACING

SPEED *	Min D **	DOWNGRADE Min D ***		
		-3%	-6%	-9%
mph	ft	ft	ft	ft
20	115	116	120	126
25	155	158	165	173
30	200	205	215	227
35	250	257	271	287
40	305	315	333	354
45	360	378	400	427
50	425	446	474	507
55	495	520	553	593
60	570	598	638	686
65	645	682	728	785
70	730	771	825	891

* - Speed is posted speed limit, off-peak 85th-percentile speed prior to work starting, or the anticipated operating speed in mph

** - Longitudinal buffer space or flagger station spacing

*** - Use on sustained downgrade steeper than -3 percent and longer than 1 mile.

TABLE 3

ADVANCE WARNING SIGN SPACING

ROAD TYPE	DISTANCE BETWEEN SIGNS *		
	A	B	C
	ft	ft	ft
URBAN - 25 mph OR LESS	100	100	100
URBAN - MORE THAN 25 mph TO 40 mph	250	250	250
URBAN - MORE THAN 40 mph	350	350	350
RURAL	500	500	500
EXPRESSWAY / FREEWAY	1000	1500	2640

* - The distances are approximate, are intended for guidance purposes only, and should be applied with engineering judgment. These distances should be adjusted by the Engineer for field conditions, if necessary, by increasing or decreasing the recommmended distances.

STATE OF CALIFORNIA
DEPARTMENT OF TRANSPORTATION

TRAFFIC CONTROL SYSTEM TABLES FOR LANE AND RAMP CLOSURES

NO SCALE

RSP T9 DATED JULY 19, 2013 SUPERSEDES RSP T9 DATED APRIL 19, 2013 THAT SUPPLEMENTS THE STANDARD PLANS BOOK DATED 2010.

REVISED STANDARD PLAN RSP T9

Dist	COUNTY	ROUTE	POST MILES TOTAL PROJECT	SHEET No.	TOTAL SHEETS
11	SD	76	R2.9/R7.5	32	39

REGISTERED CIVIL ENGINEER

April 19, 2013
PLANS APPROVAL DATE

REGISTERED PROFESSIONAL ENGINEER
Gurinderpal Bhullar
No. C48815
Exp. 9-30-14
CIVIL
STATE OF CALIFORNIA

THE STATE OF CALIFORNIA OR ITS OFFICERS OR AGENTS SHALL NOT BE RESPONSIBLE FOR THE ACCURACY OR COMPLETENESS OF SCANNED COPIES OF THIS PLAN SHEET.

TO ACCOMPANY PLANS DATED 02-24-14

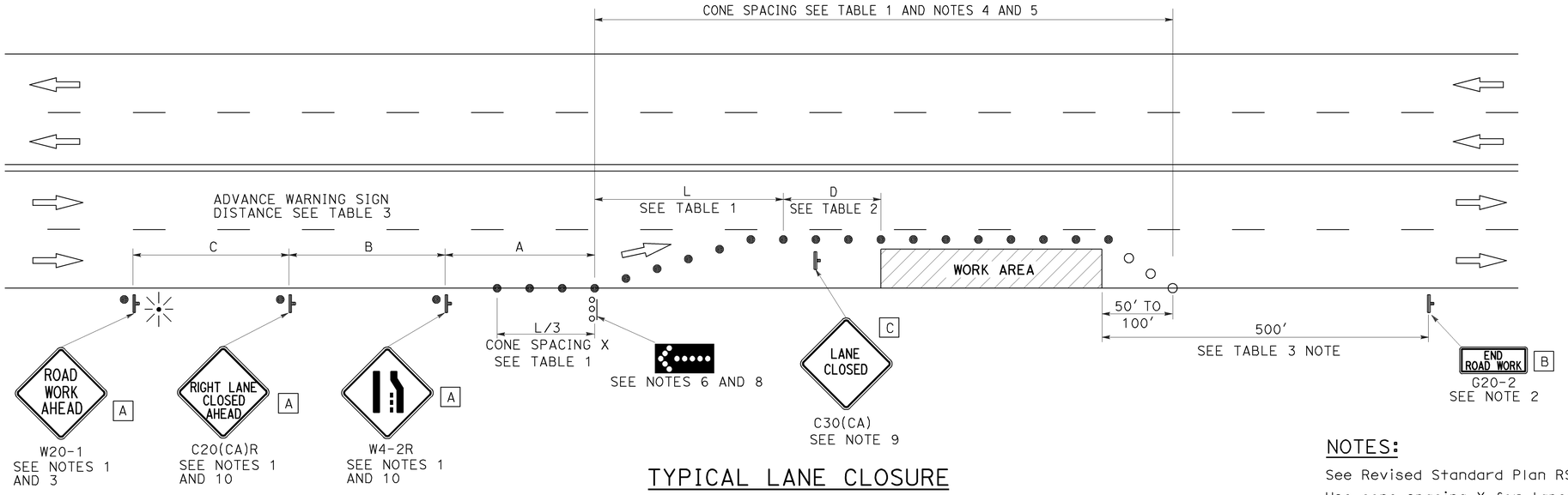

TYPICAL LANE CLOSURE

NOTES:

See Revised Standard Plan RSP T9 for tables.

Use cone spacing X for taper segment, Y for tangent segment or Z for conflict situations, as approriate, per Table 1, unless X, Y, or Z cone spacing is shown on this sheet.

Unless otherwise specified in the special provisions, all temporary warning signs shall have black legend on fluorescent orange background.

California codes are designated by (CA). Otherwise, Federal (MUTCD) codes are shown.

NOTES:

1. Each advance warning sign shall be equipped with at least two flags for daytime closure. Each flag shall be at least 16" x 16" in size and shall be orange or fluorescent red-orange in color. Flashing beacons shall be placed at the locations indicated for lane closure during hours of darkness.
2. A G20-2 "END ROAD WORK" sign, as appropriate, shall be placed at the end of the lane closure unless the end of work area is obvious, or ends within a larger project's limits.
3. If the W20-1 sign would follow within 2000' of a stationary W20-1 or G20-1 "ROAD WORK NEXT _____ MILES", use a C20(CA) sign for the first advance warning sign.
4. All cones used for lane closures during the hours of darkness shall be fitted with retroreflective bands (or sleeves) as specified in the specifications.
5. Portable delineators, placed at one-half the spacing indicated for traffic cones, may be used instead of cones for daytime closures only.
6. Flashing arrow sign shall be either Type I or Type II.
7. For approach speeds over 50 mph, use the "Traffic Control System for Lane Closure On Freeways And Expressways" plan for lane closure details and requirements.
8. A minimum 1500' of sight distance shall be provided where possible for vehicles approaching the first flashing arrow sign. Lane closures shall not begin at the top of crest vertical curve or on a horizontal curve.
9. Place a C30(CA) sign every 2000' throughout length of lane closure.
10. Median lane closures shall conform to the details as shown except that C20(CA)L and W4-2L signs shall be used.
11. At least one person shall be assigned to provide full time maintenance of traffic control devices for lane closure unless, otherwise directed by the Engineer.

LEGEND

- TRAFFIC CONE
- TRAFFIC CONE (OPTIONAL TAPER)
- TEMPORARY TRAFFIC CONTROL SIGN
- FLASHING ARROW SIGN (FAS)
- FAS SUPPORT OR TRAILER
- PORTABLE FLASHING BEACON

SIGN PANEL SIZE (Min)

A	48" x 48"
B	36" x 18"
C	30" x 30"

STATE OF CALIFORNIA
DEPARTMENT OF TRANSPORTATION

TRAFFIC CONTROL SYSTEM FOR LANE CLOSURE ON MULTILANE CONVENTIONAL HIGHWAYS

NO SCALE

RSP T11 DATED APRIL 19, 2013 SUPERSEDES STANDARD PLAN T11 DATED MAY 20, 2011 - PAGE 239 OF THE STANDARD PLANS BOOK DATED 2010.

REVISED STANDARD PLAN RSP T11

2010 REVISED STANDARD PLAN RSP T11

4-2-13

Dist	COUNTY	ROUTE	POST MILES TOTAL PROJECT	SHEET No.	TOTAL SHEETS
11	SD	76	R2.9/R7.5	33	39

REGISTERED CIVIL ENGINEER

April 19, 2013
PLANS APPROVAL DATE

REGISTERED PROFESSIONAL ENGINEER Gurinderpal Bhullar No. C48815 Exp. 9-30-14 CIVIL STATE OF CALIFORNIA

THE STATE OF CALIFORNIA OR ITS OFFICERS OR AGENTS SHALL NOT BE RESPONSIBLE FOR THE ACCURACY OR COMPLETENESS OF SCANNED COPIES OF THIS PLAN SHEET.

TO ACCOMPANY PLANS DATED 02-24-14

2010 REVISED STANDARD PLAN RSP T15

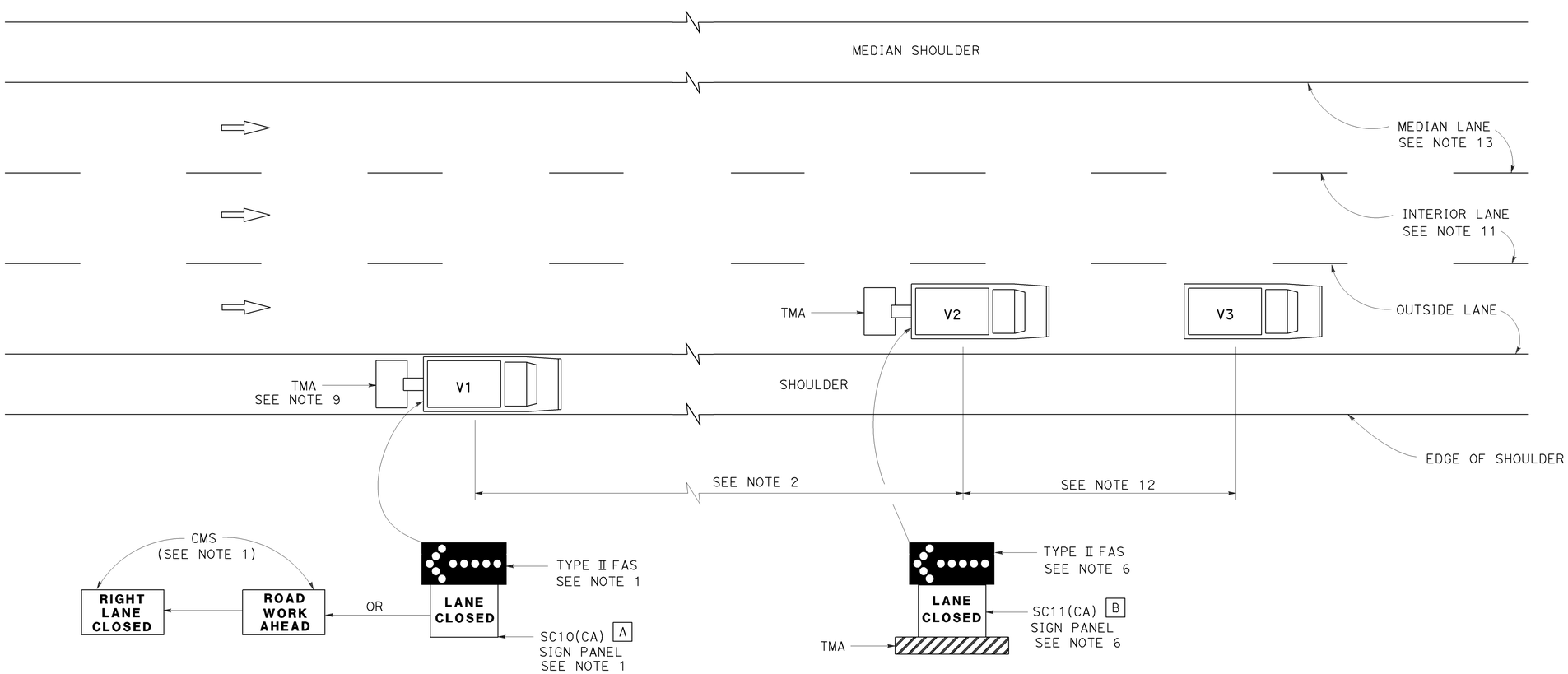

MOVING LANE CLOSURE ON MEDIAN LANE OR OUTSIDE LANE OF MULTILANE HIGHWAYS

SIGN PANEL SIZE (Min)

A 66" x 36"

B 54" x 42"

LEGEND

V1	SIGN VEHICLE
V2	SHADOW VEHICLE
V3	WORK/APPLICATION VEHICLE
	FLASHING ARROW SIGN (FAS)
CMS	CHANGEABLE MESSAGE SIGN
TMA	TRUCK-MOUNTED ATTENUATOR

NOTES:

1. Either a changeable message sign or a SC10(CA) sign panel and a Type II flashing arrow sign shall be mounted on the rear of sign vehicle V1. The changeable message sign shall be sequenced to show the "ROAD WORK AHEAD" message first, followed by the "RIGHT LANE CLOSED" message. For median lane closure, the flashing arrow symbol shall be reversed with the arrowhead on the right and the changeable message sign shall show "LEFT LANE CLOSED".
2. If traffic queues develop, sign vehicle V1 should be positioned upstream from the end of queue. Sign vehicle V1 shall be positioned where highly visible when shoulders are not available.
3. A minimum sight distance of 1500′ should be provided in advance of sign vehicle V1.
4. Sign vehicle V1 should remain at the beginning of horizontal or vertical curves until the other vehicles (V2 and V3) are far enough beyond the curve to resume the minimum sight distance of 1500′.
5. Vehicle-mounted sign panels shall have Type III or above retroreflective sheeting, black on white, or black on fluorescent orange, with 6" minimum series D letters per Caltrans sign specifications.
6. Shadow vehicle V2 shall be equipped with a truck-mounted attenuator. The sign panel shown and a Type II flashing arrow sign shall be mounted on the rear of shadow vehicle V2. For median lane closure the flashing arrow sign symbol shall be displayed with the arrowhead on the right.
7. All vehicles used for lane closures shall be equipped with two-way radios, and the vehicle operators shall maintain communication during the work or application operation.
8. All vehicles shall be equipped with flashing or rotating amber lights.
9. If sign vehicle V1 encroaches into the traffic lane due to insufficient shoulder width, sign vehicle V1 shall be equipped with a truck-mounted attenuator. Sign vehicle V1 shall stay as close to the edge of shoulder as practicable.
10. Where workers would be on foot in the work area, a stationary type lane closure (Revised Standard Plan T10, T11, etc., as applicable) shall be used instead of this plan.
11. For moving lane closure on interior lane of multilane highways, use Revised Standard Plan T16.
12. The spacing between work vehicle(s) and the shadow vehicles, and between each shadow vehicle should be minimized to deter road users from driving in between.
13. When the work/application vehicle V3 occupies the median lane, sign vehicle V1 should drive in the median shoulder and indicate left lane closed ahead.

STATE OF CALIFORNIA
DEPARTMENT OF TRANSPORTATION

TRAFFIC CONTROL SYSTEM FOR MOVING LANE CLOSURE ON MULTILANE HIGHWAYS

NO SCALE

RSP T15 DATED APRIL 19, 2013 SUPERSEDES STANDARD PLAN T15
DATED MAY 20, 2011 - PAGE 243 OF THE STANDARD PLANS BOOK DATED 2010.

REVISED STANDARD PLAN RSP T15

12-18-12

Dist	COUNTY	ROUTE	POST MILES TOTAL PROJECT	SHEET No.	TOTAL SHEETS
11	SD	76	R2.9/R7.5	34	39

REGISTERED CIVIL ENGINEER

April 19, 2013
PLANS APPROVAL DATE

REGISTERED PROFESSIONAL ENGINEER Gurinderpal Bhullar No. C48815 Exp. 9-30-14 CIVIL STATE OF CALIFORNIA

THE STATE OF CALIFORNIA OR ITS OFFICERS OR AGENTS SHALL NOT BE RESPONSIBLE FOR THE ACCURACY OR COMPLETENESS OF SCANNED COPIES OF THIS PLAN SHEET.

TO ACCOMPANY PLANS DATED 02-24-14

2010 REVISED STANDARD PLAN RSP T16

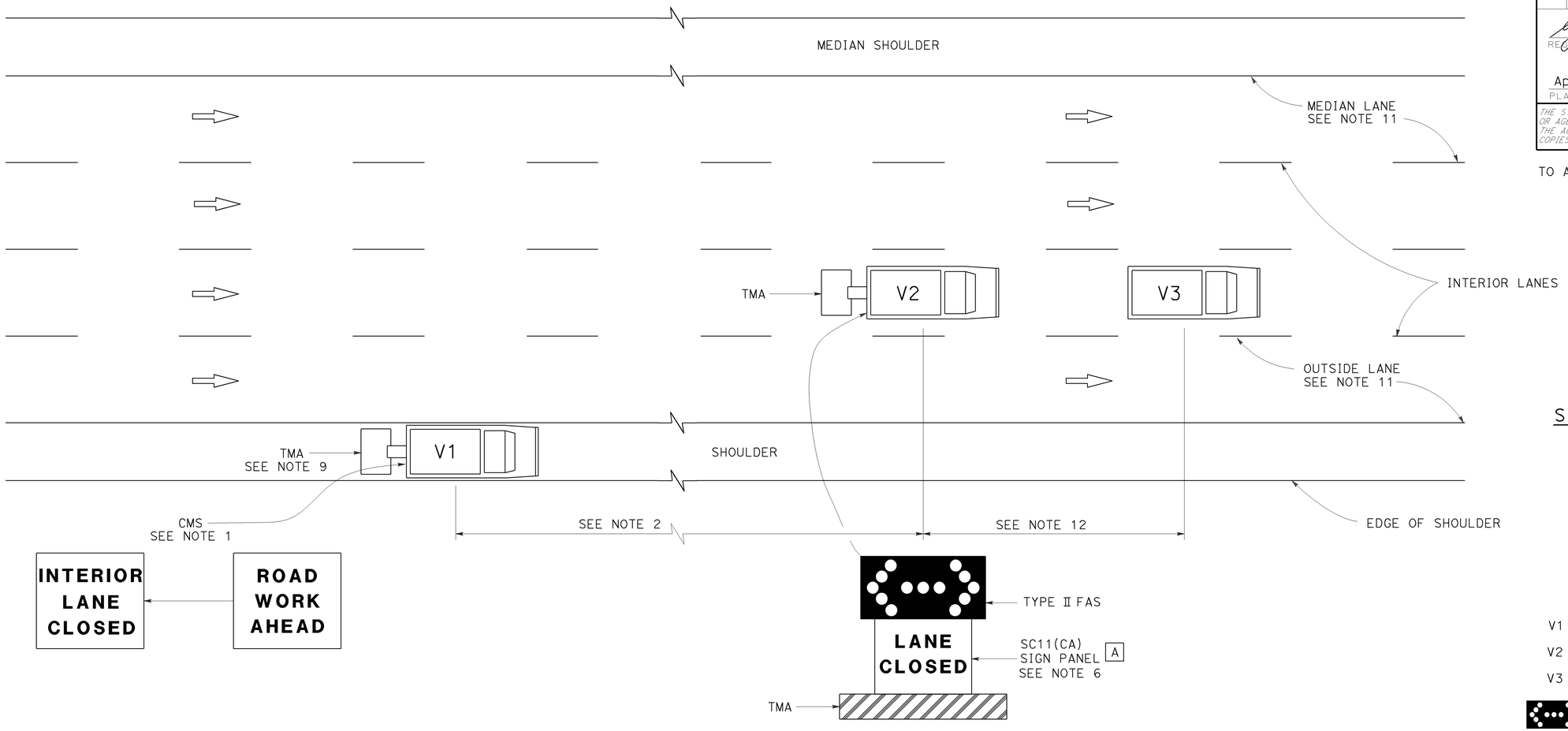

SIGN PANEL SIZE (Min)

A 54" x 42"

LEGEND

V1	SIGN VEHICLE
V2	SHADOW VEHICLE
V3	WORK/APPLICATION VEHICLE
	FLASHING ARROW SIGN (FAS) IN FLASHING DOUBLE ARROW MODE
CMS	CHANGEABLE MESSAGE SIGN
TMA	TRUCK-MOUNTED ATTENUATOR

MOVING LANE CLOSURE ON INTERIOR LANE OF MULTILANE HIGHWAYS

NOTES:

1. A changeable message sign shall be mounted on the rear of sign vehicle V1. The changeable message sign shall be sequenced to show the "ROAD WORK AHEAD" message first, followed by the "INTERIOR LANE CLOSED" message. The message "CENTER LANE CLOSED" may be used in place of the "INTERIOR LANE CLOSED" message.
2. If traffic queues develop, sign vehicle V1 should be positioned upstream from the end of queue. Sign vehicle V1 shall be positioned where highly visible when shoulders are not available.
3. A minimum sight distance of 1500′ should be provided in advance of sign vehicle V1.
4. Sign vehicle V1 should remain at the beginning of horizontal or vertical curves until the other vehicles (V2 and V3) are far enough beyond the curve to resume the minimum sight distance of 1500′.
5. Vehicle-mounted sign panels shall have Type III or above retroreflective sheeting, black on white, or black on fluorescent orange, with 6" minimum series D letters per Caltrans sign specifications.
6. Shadow vehicle V2 shall be equipped with a truck-mounted attenuator. The sign panel shown and a Type II flashing arrow sign shall be mounted on the rear of shadow vehicle V2.
7. All vehicles used for lane closures shall be equipped with two-way radios, and the vehicle operators shall maintain communication during the work or application operation.
8. All vehicles shall be equipped with flashing or rotating amber lights.
9. If sign vehicle V1 encroaches into the traffic lane due to insufficient shoulder width, sign vehicle V1 shall be equipped with a truck-mounted attenuator. Sign vehicle V1 shall stay as close to the edge of shoulder as practicable.
10. Where workers would be on foot in the work area, a stationary type lane closure (Revised Standard Plan T10, T11 etc., as applicable) shall be used instead of this plan.
11. For moving lane closure on median lane or outside lane of multilane highways, use Revised Standard Plan T15.
12. The spacing between work vehicle(s) and the shadow vehicles, and between each shadow vehicle should be minimized to deter road users from driving in between.

STATE OF CALIFORNIA
DEPARTMENT OF TRANSPORTATION

TRAFFIC CONTROL SYSTEM FOR MOVING LANE CLOSURE ON MULTILANE HIGHWAYS

NO SCALE

RSP T16 DATED APRIL 19, 2013 SUPERSEDES STANDARD PLAN T16
DATED MAY 20, 2011 - PAGE 244 OF THE STANDARD PLANS BOOK DATED 2010.

REVISED STANDARD PLAN RSP T16

12-18-12

Dist	COUNTY	ROUTE	POST MILES TOTAL PROJECT	SHEET No.	TOTAL SHEETS
11	SD	76	R2.9/R7.5	35	39

Theresa Gabriel
REGISTERED ELECTRICAL ENGINEER

July 19, 2013
PLANS APPROVAL DATE

REGISTERED PROFESSIONAL ENGINEER Theresa Aziz Gabriel No. E15129 Exp. 6-30-14 ELECTRICAL STATE OF CALIFORNIA

THE STATE OF CALIFORNIA OR ITS OFFICERS OR AGENTS SHALL NOT BE RESPONSIBLE FOR THE ACCURACY OR COMPLETENESS OF SCANNED COPIES OF THIS PLAN SHEET.

TO ACCOMPANY PLANS DATED 02-24-14

LEGEND:

AB	ABANDON. IF APPLIED TO CONDUIT, REMOVE CONDUCTORS
BC	INSTALL PULL BOX IN EXISTING CONDUIT RUN
BP	PEDESTRIAN BARRICADE, TYPE AS INDICATED ON PLAN
CB	INSTALL CONDUIT INTO EXISTING PULL BOX
CC	CONNECT NEW AND EXISTING CONDUIT. REMOVE EXISTING CONDUCTORS AND INSTALL CONDUCTORS AS INDICATED
CF	CONDUIT TO REMAIN FOR FUTURE USE. REMOVE CONDUCTORS. INSTALL PULL TAPE
DH	DETECTOR HANDHOLE
FA	FOUNDATION TO BE ABANDONED
IS	INSTALL SIGN ON SIGNAL MAST ARM
NS	NO SLIP BASE ON STANDARD
PEC	PHOTOELECTRIC CONTROL
PEU	PHOTOELECTRIC UNIT
RC	EQUIPMENT OR MATERIAL TO BE REMOVED AND BECOME THE PROPERTY OF THE CONTRACTOR
RE	REMOVE ELECTROLIER, FUSES AND BALLAST. TAPE ENDS OF CONDUCTORS
RL	RELOCATE EQUIPMENT
RR	REMOVE AND REUSE EQUIPMENT
RS	REMOVE AND SALVAGE EQUIPMENT
SC	SPLICE NEW TO EXISTING CONDUCTORS
SD	SERVICE DISCONNECT
TSP	TELEPHONE SERVICE POINT

ABBREVIATIONS

APS	ACCESSIBLE PEDESTRIAN SIGNAL
BBS	BATTERY BACKUP SYSTEM
BC	BOLT CIRCLE
BPB	BICYCLE PUSH BUTTON
C	CONDUIT
CB	CIRCUIT BREAKER
CCTV	CLOSED CIRCUIT TELEVISION
Ckt	CIRCUIT
CMS	CHANGEABLE MESSAGE SIGN
Ctid	CALTRANS IDENTIFICATION
Comm	COMMUNICATION
DLC	LOOP DETECTOR LEAD-IN CABLE
EMS	EXTINGUISHABLE MESSAGE SIGN
EVUC	EMERGENCY VEHICLE UNIT CABLE
EVUD	EMERGENCY VEHICLE UNIT DETECTOR
FB	FLASHING BEACON
FBCA	FLASHING BEACON CONTROL ASSEMBLY
FBS	FLASHING BEACON WITH SLIP BASE
FO	FIBER OPTIC
G	EQUIPMENT GROUNDING CONDUCTOR
GB	GROUND BUS
GFCI	GROUND FAULT CIRCUIT INTERRUPTER
HAR	HIGHWAY ADVISORY RADIO
Hex	HEXAGONAL
HPS	HIGH PRESSURE SODIUM
IISNS	INTERNALLY ILLUMINATED STREET NAME SIGN
ISL	INDUCTION SIGN LIGHTING
LED	LIGHT EMITTING DIODE
LMA	LUMINAIRE MAST ARM
LPS	LOW PRESSURE SODIUM
Ltg	LIGHTING
Lum	LUMINAIRE
M	METERED
MAT	MAST ARM MOUNTING TOP ATTACHMENT
MAS	MAST ARM MOUNTING SIDE ATTACHMENT
M/M	MULTIPLE TO MULTIPLE TRANSFORMER
Mtg	MOUNTING
MV	MERCURY VAPOR LIGHTING FIXTURE
MVDS	MICROWAVE VEHICLE DETECTION SYSTEM
N	NEUTRAL (GROUNDED CONDUCTOR)
NB	NEUTRAL BUS
NC	NORMALLY CLOSE
NO	NORMALLY OPEN
P	CIRCUIT BREAKER'S POLE
PB	PULL BOX
PBA	PUSH BUTTON ASSEMBLY
PEC	PHOTOELECTRIC CONTROL
Ped	PEDESTRIAN
PEU	PHOTOELECTRIC UNIT
PT	CONDUIT WITH PULL TAPE
RE	RELOCATED EQUIPMENT
RM	RAMP METERING
RWIS	ROADSIDE WEATHER INFORMATION SYSTEM
SB	SLIP BASE
SIC	SIGNAL INTERCONNECT CABLE
Sig	SIGNAL
SMA	SIGNAL MAST ARM
SNS	STREET NAME SIGN
SP	SERVICE POINT
TDC	TELEPHONE DEMARCATION CABINET
TMS	TRAFFIC MONITORING STATION
TOS	TRAFFIC OPERATIONS SYSTEM
Veh	VEHICLE
VIVDS	VIDEO IMAGE VEHICLE DETECTION SYSTEM
WIM	WEIGH-IN-MOTION
Xfmr	TRANSFORMER

SOFFIT AND WALL MOUNTED LUMINAIRES

PENDANT, 70 W HPS UNLESS OTHERWISE SPECIFIED

FLUSH, 70 W HPS UNLESS OTHERWISE SPECIFIED

WALL SURFACE, 70 W HPS UNLESS OTHERWISE SPECIFIED

EXISTING SOFFIT OR WALL LUMINAIRE TO REMAIN UNMODIFIED

EXISTING SOFFIT OR WALL LUMINAIRE TO BE MODIFIED AS SPECIFIED

NOTE:

Arrow indicates "street side" of luminaire.

COMMONLY USED SYMBOLS FOR UNITED STATES CUSTOMARY UNITS OF MEASUREMENT:

SYMBOL USED	DEFINITIONS
Ω	OHMS
min	MINUTE
s	SECOND
bps	BITS PER SECOND
Bps	BYTES PER SECOND
A	AMPERE
V	VOLT
V(dc)	VOLT (DIRECT CURRENT)
V(ac)	VOLT (ALTERNATING CURRENT)
FC	FOOT - CANDLE
W	WATTS
VA	VOLT-AMPERE
M	MEGA
k	KILO
m	MILLI
μ	MICRO
P	PICO
Hz	HERTZ

MISCELLANEOUS ELECTROLIERS

NEW	EXISTING	
		LUMINAIRE ON WOOD POLE
		NON-STANDARD ELECTROLIER (SEE PROJECT NOTES OR PROJECT PLANS)
		CITY ELECTROLIER
		ELECTROLIER FOUNDATION (FUTURE INSTALLATION)

NOTES:

1. HPS luminaires shall be 310 W HPS when installed on Type 21, 21D, 30, 31 and 32 Standards, unless otherwise specified. HPS luminaires shall be 200 W when installed on other type standards or poles, unless otherwise specified.
2. LED luminaires shall be 235 W when installed on Type 21, 21D, 30, 31 and 32 Standards, unless otherwise specified. LED luminaires shall be 165 W when installed on other type standards or poles, unless otherwise specified.
3. Luminaires shall be the cutoff type, ANSI Type III medium cutoff lighting distribution, unless otherwise specified.

STANDARD ELECTROLIER

NEW	EXISTING	STANDARD TYPE
		15
		15D
		15 STRUCTURE
		15D STRUCTURE
		21
		21D
		21 STRUCTURE
		21D STRUCTURE
		30
		31
		32

STATE OF CALIFORNIA
DEPARTMENT OF TRANSPORTATION

ELECTRICAL SYSTEMS (LEGEND AND ABBREVIATIONS)

NO SCALE

RSP ES-1A DATED JULY 19, 2013 SUPERSEDES STANDARD PLAN ES-1A DATED MAY 20, 2011 - PAGE 425 OF THE STANDARD PLANS BOOK DATED 2010.

REVISED STANDARD PLAN RSP ES-1A

2010 REVISED STANDARD PLAN RSP ES-1A

Dist	COUNTY	ROUTE	POST MILES TOTAL PROJECT	SHEET No.	TOTAL SHEETS
11	SD	76	R2.9/R7.5	36	39

Theresa Gabriel
REGISTERED ELECTRICAL ENGINEER

July 19, 2013
PLANS APPROVAL DATE

REGISTERED PROFESSIONAL ENGINEER
Theresa Aziz Gabriel
No. E15129
Exp. 6-30-14
ELECTRICAL
STATE OF CALIFORNIA

THE STATE OF CALIFORNIA OR ITS OFFICERS OR AGENTS SHALL NOT BE RESPONSIBLE FOR THE ACCURACY OR COMPLETENESS OF SCANNED COPIES OF THIS PLAN SHEET.

TO ACCOMPANY PLANS DATED 02-24-14

CONDUIT

NEW	EXISTING	
		LIGHTING CONDUIT, UNLESS OTHERWISE INDICATED OR NOTED
		TRAFFIC SIGNAL CONDUIT
C	c	COMMUNICATION CONDUIT
T	t	TELEPHONE CONDUIT
F	f	FIRE ALARM CONDUIT
FO	fo	FIBER OPTIC CONDUIT
		CONDUIT TERMINATION
R	r	CONDUIT RISER ATTACHED TO THE STRUCTURE OR SERVICE POLE

SERVICE EQUIPMENT

NEW	EXISTING	
OH	oh	OVERHEAD LINES
U	U	WOOD POLE, "U" INDICATES UTILITY OWNED
		POLE GUY WITH ANCHOR
		UTILITY TRANSFORMER - GROUND MOUNTED
III	III	SERVICE EQUIPMENT ENCLOSURE TYPE. DOOR INDICATES FRONT OF ENCLOSURE
T	t	TELEPHONE DEMARCATION CABINET

POLE-MOUNTED SERVICE DESIGNATION

TYPE H SERVICE, 28'-10" — TYPE OF INSTALLATION AND POLE HEIGHT ABOVE GRADE

FLASHING BEACON

NEW	EXISTING	
R	R	FLASHING BEACON (ONE VEHICLE SIGNAL HEAD WITH BACKPLATE AND VISOR) "R" INDICATES RED INDICATION, "Y" INDICATES YELLOW INDICATION
Y Y	Y Y	FLASHING BEACON WITH TYPE 15-FBS STANDARD AND A SIGN.
R R	R R	FLASHING BEACON WITH TYPES 9, 9A OR 9B SIGN UNLESS OTHERWISE SPECIFIED OR INDICATED

SIGNAL EQUIPMENT

NEW	EXISTING	
C	C	PEDESTRIAN SIGNAL HEAD "C" INDICATES COUNTDOWN PEDESTRIAN HEAD
		PUSH BUTTON ASSEMBLY POST
		PEDESTRIAN BARRICADE
		VEHICLE SIGNAL HEAD (WITH BACKPLATE AND 3-SECTIONS: RED, YELLOW AND GREEN)
		VEHICLE SIGNAL HEAD WITH ANGLE VISOR
PV	PV	MODIFICATIONS OF BASIC SYMBOL: "L" INDICATES ALL NON-ARROW SECTIONS LOUVERED "LG" INDICATES LOUVERED GREEN SECTION ONLY "PV" INDICATES ALL 12" SECTIONS PROGRAMMED VISIBILITY "8" INDICATES ALL 8" SECTIONS (ONLY WHEN SPECIFIED)
		VEHICLE SIGNAL HEAD CONSISTING OF RED, YELLOW AND GREEN LEFT ARROW SECTIONS
		VEHICLE SIGNAL HEAD CONSISTING OF RED AND YELLOW SECTIONS WITH AN UP GREEN ARROW SECTION
		VEHICLE SIGNAL HEAD (5 SECTION) CONSISTING OF RED, YELLOW AND GREEN SECTIONS WITH YELLOW AND GREEN RIGHT ARROW SECTIONS
		TYPE 15TS STANDARD WITH VEHICLE SIGNAL HEAD AND LUMINAIRE
		TYPE 21TS STANDARD WITH VEHICLE SIGNAL HEAD AND LUMINAIRE
		STANDARD WITH LUMINAIRE AND SIGNAL MAST ARMS AND ATTACHED VEHICLE SIGNAL HEADS
		TYPE 1 STANDARD WITH ATTACHED VEHICLE SIGNAL HEADS
		STANDARD WITH A SIGNAL MAST ARM, ATTACHED VEHICLE SIGNAL HEADS AND INTERNALLY ILLUMINATED STREET NAME SIGN
		CONTROLLER ASSEMBLY. DOOR INDICATES FRONT OF CABINET

SIGNAL EQUIPMENT Cont

NEW	EXISTING	
		GUARD POST
		TYPE 1 STANDARD WITH RAMP METERING SIGN
		OPTICAL DETECTOR FOR THE EMERGENCY VEHICLE DETECTION SYSTEM

NOTES:

1. All signal sections shall be 12" unless shown otherwise.
2. Signal heads shall be provided with backplates unless shown otherwise.

ILLUMINATED OVERHEAD SIGN

NEW	EXISTING	
		SINGLE POST, SINGLE ILLUMINATED SIGN, BALANCED BUTTERFLY
		SINGLE POST, DOUBLE ILLUMINATED SIGN, BALANCED BUTTERFLY
		SINGLE POST, SINGLE ILLUMINATED SIGN, FULL CANTILEVER
		DOUBLE POST, SINGLE ILLUMINATED SIGN
		SINGLE ILLUMINATED SIGN MOUNTED ON STRUCTURE
		DOUBLE POST, SINGLE ILLUMINATED SIGN WITH ELECTROLIER

STATE OF CALIFORNIA
DEPARTMENT OF TRANSPORTATION

ELECTRICAL SYSTEMS (LEGEND AND ABBREVIATIONS)

NO SCALE

RSP ES-1B DATED JULY 19, 2013 SUPERSEDES STANDARD PLAN ES-1B DATED MAY 20, 2011 - PAGE 426 OF THE STANDARD PLANS BOOK DATED 2010.

REVISED STANDARD PLAN RSP ES-1B

2010 REVISED STANDARD PLAN RSP ES-1B

7-15-13

Dist	COUNTY	ROUTE	POST MILES TOTAL PROJECT	SHEET No.	TOTAL SHEETS
11	SD	76	R2.9/R7.5	37	39

Theresa Gabriel
REGISTERED ELECTRICAL ENGINEER

July 19, 2013
PLANS APPROVAL DATE

REGISTERED PROFESSIONAL ENGINEER
Theresa Aziz Gabriel
No. E15129
Exp. 6-30-14
ELECTRICAL
STATE OF CALIFORNIA

THE STATE OF CALIFORNIA OR ITS OFFICERS OR AGENTS SHALL NOT BE RESPONSIBLE FOR THE ACCURACY OR COMPLETENESS OF SCANNED COPIES OF THIS PLAN SHEET.

TO ACCOMPANY PLANS DATED 02-24-14

EQUIPMENT IDENTIFICATION

ILLUMINATED SIGN IDENTIFICATION NUMBER:

SIGN No. 12345
10 ISL SCI 1.0

- SIGN NUMBER - PLACE ON POST OR STRUCTURE
- TRANSFORMER RATING (kVA)
- LIGHTING CONTROL TYPE
- NUMBER AND TYPE OF FIXTURES

DO NOT PLACE ON STANDARD OR STRUCTURE

ELECTROLIER OR EQUIPMENT IDENTIFICATION NUMBER:

12345 - 15'-0"

- MAST ARM LENGTH, IF SHOWN. DO NOT PLACE ON STANDARD OR STRUCTURE
- EQUIPMENT NUMBER - PLACE ON STANDARD OR STRUCTURE. EXISTING EQUIPMENT NUMBERS ARE SHOWN IN PARENTHESIS

CONDUIT AND CONDUCTOR IDENTIFICATION:

1½"C, 2#10, 15#14, 2 DLC, 12P#18

- PAIR
- NUMBER AND SIZE OF CONDUCTORS AND CABLES
- SIZE OF CONDUIT IN INCHES

ø1, ø2, ø2P, etc.	TRAFFIC PHASE IDENTIFICATION FOR SIGNAL FACES, DETECTORS AND PHASE DIAGRAMS
1 2 3	LEGEND NUMBERS
A B C	EQUIPMENT, SIGNAL POLES, INSTALLATION OR ITEMS
1 2 3	CONDUIT RUN NUMBERS

SIGNAL AND LIGHTING STANDARD (TYPICAL DESIGNATION):

19A - 3 - 100

- WIND VELOCITY = 100 mph
- CASE 3 ARM LOADING
- STANDARD TYPE
- STANDARD PLAN SHEET NUMBER
- DETAIL, NUMBER, SECTION, TYPE OR ELEVATION

MISCELLANEOUS EQUIPMENT

NEW	EXISTING	
CMS	cms	CHANGEABLE MESSAGE SIGN
		CLOSED CIRCUIT TELEVISION CAMERA
		HIGHWAY ADVISORY RADIO POLE AND ANTENNA
EMS	ems	EXTINGUISHABLE MESSAGE SIGN
M V	m v	DETECTION DEVICE M = MICROWAVE SENSOR V = VIDEO IMAGE SENSOR

WIRING DIAGRAM LEGEND

----	EXTERNAL CONDUCTOR
	CONDUCTOR OR BUS
	TIE POINT
	CONTACTOR COIL
	CONTACTOR, NO CONTACT
	TERMINAL BLOCKS
	CONTACTOR, NC CONTACT
	ENCLOSURE BOND
	GROUNDING ELECTRODE
	CIRCUIT BREAKER
	RECEPTACLE

PULL BOXES

NEW	EXISTING	
		PULL BOX, No. 5 UNLESS OTHERWISE INDICATED OR NOTED
3	9A(21)	PULL BOX, ADDITIONAL DESIGNATIONS OR DESCRIPTIONS

3 No. 3½ PULL BOX
5 No. 5 PULL BOX
6 No. 6 PULL BOX
7 No. 7 (CEILING PULL BOX)
8 No. 8 (PENDANT SOFFIT PULL BOX)
9 No. 9 PULL BOX
9A No. 9A PULL BOX

(C) COMMUNICATIONS PULL BOX
(E) PULL BOX WITH EXTENSION
(S) SPRINKLER CONTROL PULL BOX
(21) ANCHOR BOLTS AND CONDUIT FOR FUTURE INSTALLATION OF TYPE 21 STANDARD
(T) TRAFFIC PULL BOX

VEHICLE DETECTORS

5 J 9 U

- VEHICLE DETECTOR DESIGNATION
- U = UPPER
  L = LOWER
- SLOT NUMBER IN INPUT FILE
- INPUT FILE (I OR J)
- PHASE

NEW	EXISTING	
		TYPE A DETECTOR LOOP. OUTLINE OF SAWCUT SHOWN
		TYPE B DETECTOR LOOP. OUTLINE OF SAWCUT SHOWN
		TYPE C DETECTOR LOOP. OUTLINE OF SAWCUT SHOWN
		TYPE D DETECTOR LOOP. OUTLINE OF SAWCUT SHOWN
		TYPE E DETECTOR LOOP. OUTLINE OF SAWCUT SHOWN
		TYPE Q DETECTOR LOOP. OUTLINE OF SAWCUT SHOWN
		MAGNETIC DETECTOR
DH	dh	DETECTOR HANDHOLE
		MICROWAVE OR VIDEO DETECTION ZONE

STATE OF CALIFORNIA
DEPARTMENT OF TRANSPORTATION

ELECTRICAL SYSTEMS (LEGEND AND ABBREVIATIONS)

NO SCALE

RSP ES-1C DATED JULY 19, 2013 SUPERSEDES STANDARD PLAN ES-1C DATED MAY 20, 2011 - PAGE 427 OF THE STANDARD PLANS BOOK DATED 2010.

REVISED STANDARD PLAN RSP ES-1C

2010 REVISED STANDARD PLAN RSP ES-1C

7-11-13

Dist	COUNTY	ROUTE	POST MILES TOTAL PROJECT	SHEET No.	TOTAL SHEETS
11	SD	76	R2.9/R7.5	38	39

Theresa Gabriel
REGISTERED ELECTRICAL ENGINEER

July 19, 2013
PLANS APPROVAL DATE

REGISTERED PROFESSIONAL ENGINEER
Theresa Aziz Gabriel
No. E15129
Exp. 6-30-14
ELECTRICAL
STATE OF CALIFORNIA

THE STATE OF CALIFORNIA OR ITS OFFICERS OR AGENTS SHALL NOT BE RESPONSIBLE FOR THE ACCURACY OR COMPLETENESS OF SCANNED COPIES OF THIS PLAN SHEET.

TO ACCOMPANY PLANS DATED 02-24-14

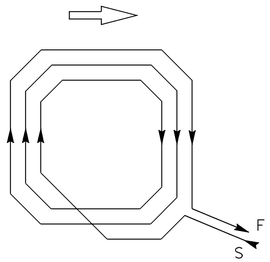

WINDING DETAIL

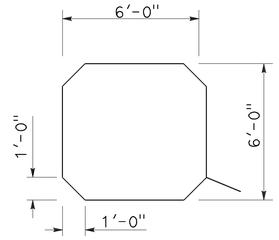

SAWCUT DETAIL

TYPE A LOOP DETECTOR CONFIGURATION

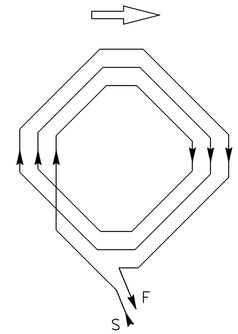

WINDING DETAIL

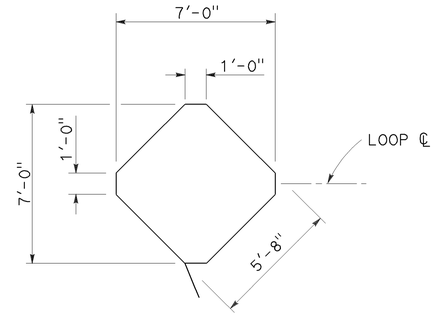

SAWCUT DETAIL

TYPE B LOOP DETECTOR CONFIGURATION

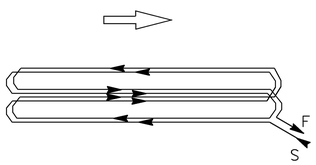

WINDING DETAIL

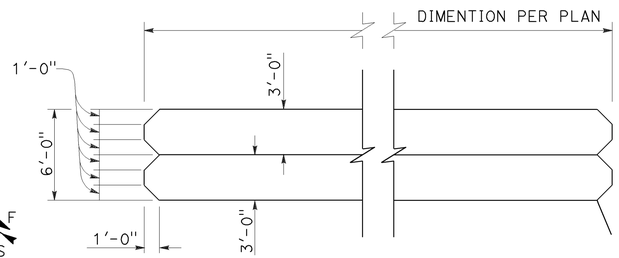

SAWCUT DETAIL

TYPE C LOOP DETECTOR CONFIGURATION

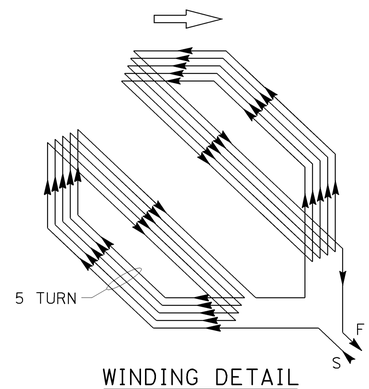

WINDING DETAIL

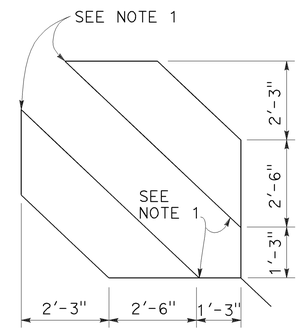

SAWCUT DETAIL

TYPE D LOOP DETECTOR CONFIGURATION

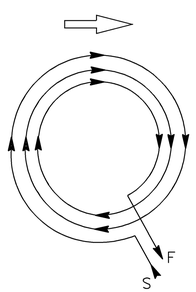

WINDING DETAIL

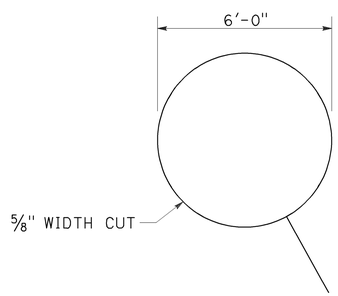

SAWCUT DETAIL

TYPE E LOOP DETECTOR CONFIGURATION

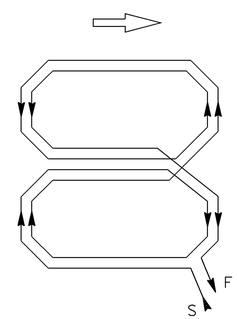

WINDING DETAIL

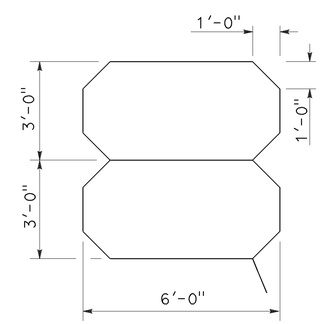

SAWCUT DETAIL

TYPE Q LOOP DETECTOR CONFIGURATION

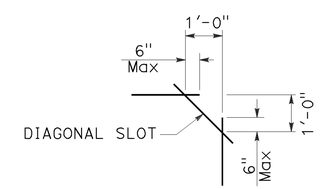

PLAN VIEW OF DIAGONAL SLOT AT CORNERS

NOTES:

1. Round corners of acute angle sawcuts to prevent damage to conductors.
2. Typical distance separating loops from edge to edge is 10' for Type A, B, D and E installation in single lane.

STATE OF CALIFORNIA
DEPARTMENT OF TRANSPORTATION

ELECTRICAL SYSTEMS (DETECTORS)

NO SCALE

RSP ES-5B DATED JULY 19, 2013 SUPERSEDES STANDARD PLAN ES-5B DATED MAY 20, 2011 - PAGE 449 OF THE STANDARD PLANS BOOK DATED 2010.

REVISED STANDARD PLAN RSP ES-5B

2010 REVISED STANDARD PLAN RSP ES-5B

7-9-13

Dist	COUNTY	ROUTE	POST MILES TOTAL PROJECT	SHEET No.	TOTAL SHEETS
11	SD	76	R2.9/R7.5	39	39

Theresa Gabriel
REGISTERED ELECTRICAL ENGINEER

July 19, 2013
PLANS APPROVAL DATE

REGISTERED PROFESSIONAL ENGINEER Theresa Aziz Gabriel No. E15129 Exp. 6-30-14 ELECTRICAL STATE OF CALIFORNIA

THE STATE OF CALIFORNIA OR ITS OFFICERS OR AGENTS SHALL NOT BE RESPONSIBLE FOR THE ACCURACY OR COMPLETENESS OF SCANNED COPIES OF THIS PLAN SHEET.

TO ACCOMPANY PLANS DATED 02-24-14

2010 REVISED STANDARD PLAN RSP ES-5D

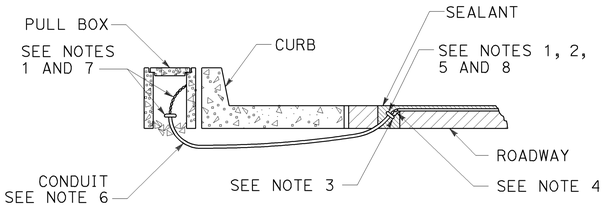

TYPE A
CURB TERMINATION DETAIL

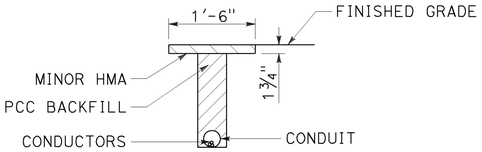

"T" TRENCH
DETAIL T

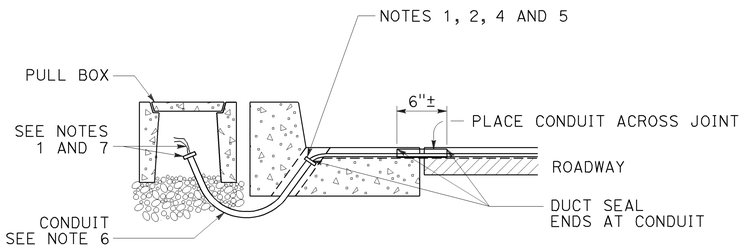

CROSS SECTION

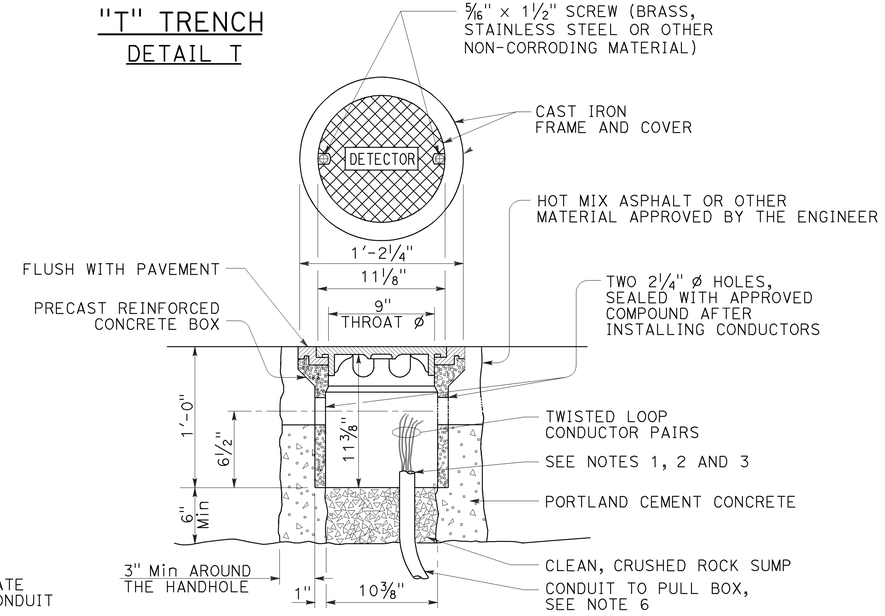

DETECTOR HANDHOLE DETAIL

NOTES:

1. Bushing shall be used at end of conduit.
2. Tape detector conductors or cables 3" each side of bushings.
3. Install duct seal compound to each end of termination conduit before installing sealant.
4. Round all sharp edges where detector conductors or cables have to pass.
5. End of conduit shall be 3⅛" below roadway surface.
6.

Conduit size	Loop conductors
1"C minimum	1 to 2 pairs
1½"C minimum	3 to 4 pairs
2"C minimum	5 or more pairs

7. Splice detector conductors or cables to detector lead-in-cable.
8. Location of detector handhole when shown on plans.
9. When the shoulder and traveled way are paved with the same material and there is no joint between them, the conduit shall extend only 2'-0" into the shoulder pavement.
10. ¾"C, Type 3 conduit 6" long minimum, plug both ends with duct compound to keep out sealant.
11. ½" Minimum between top of conduit and pavement surface.
12. Sawcut shall not exceed 1" in width and ⅛" longer than conduit to be installed.
13. Conductors with ½" minimum slack inside conduit.
14. Inductive loop detector saw slot.

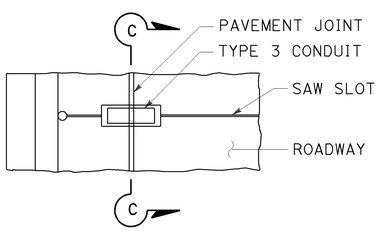

PLAN VIEW

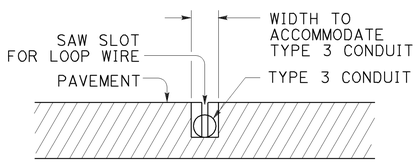

SECTION C-C

TYPE B
CURB TERMINATION DETAIL

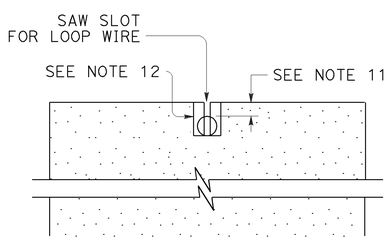

SECTION A-A

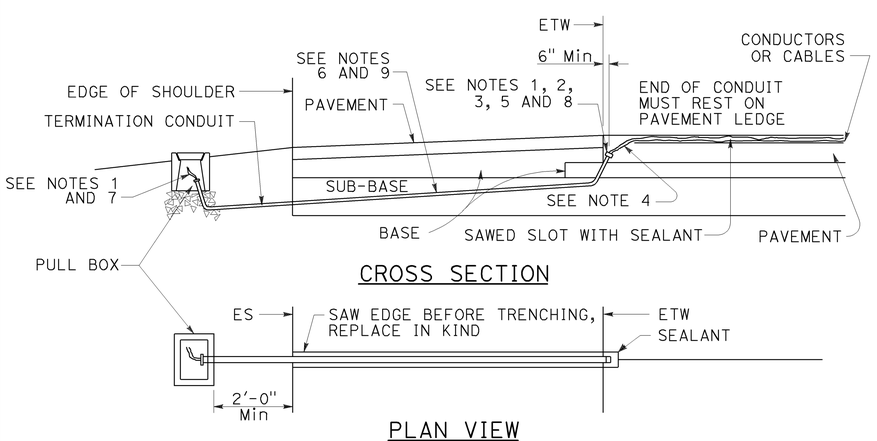

CROSS SECTION

PLAN VIEW

SHOULDER TERMINATION DETAILS

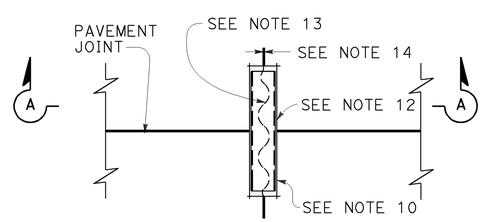

PLAN VIEW

TYPICAL LOOP LEAD-IN DETAIL
AT PAVEMENT JOINT

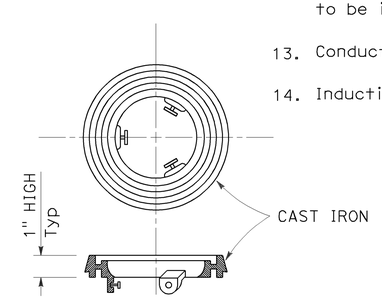

LOCKING GRADE RING

STATE OF CALIFORNIA
DEPARTMENT OF TRANSPORTATION

ELECTRICAL SYSTEMS (CURB TERMINATION AND HANDHOLE)

NO SCALE

RSP ES-5D DATED JULY 19, 2013 SUPERSEDES STANDARD PLAN ES-5D
DATED MAY 20, 2011 - PAGE 451 OF THE STANDARD PLANS BOOK DATED 2010.

REVISED STANDARD PLAN RSP ES-5D

7-9-13