Dist	COUNTY	ROUTE	POST MILES TOTAL PROJECT	SHEET No.	TOTAL SHEETS
11	SD	54,805	1.8,5.5/9.4	1	635

STATE OF CALIFORNIA

DEPARTMENT OF TRANSPORTATION

PROJECT PLANS FOR CONSTRUCTION ON

STATE HIGHWAY

IN SAN DIEGO COUNTY IN CHULA VISTA AND NATIONAL CITY ON ROUTE 54 AT ROUTE 805/54 SEPARATION AND ON ROUTE 805 FROM 0.4 MILE NORTH OF PALOMAR STREET OVERCROSSING TO 0.6 MILE NORTH OF ROUTE 805/54 SEPARATION

TO BE SUPPLEMENTED BY STANDARD PLANS DATED MAY 2006

INDEX OF PLANS

SHEET No.	DESCRIPTION
1	TITLE AND LOCATION MAP
2-5	TYPICAL CROSS SECTIONS
6	PROJECT CONTROL
7-22	LAYOUTS
23-38	PROFILE AND SUPERELEVATION DIAGRAMS
39-54	CONSTRUCTION DETAILS
55-72	TEMPORARY WATER POLLUTION CONTROL PLANS, DETAILS AND QUANTITIES
73-78	EROSION CONTROL PLANS
79-82	CONTOUR GRADING
83-170	DRAINAGE PLANS, PROFILES, DETAILS AND QUANTITIES
171-186	UTILITY PLANS
187	CONSTRUCTION AREA SIGNS
188-262	STAGE CONSTRUCTION
263-276	TRAFFIC HANDLING PLANS
277-332	PAVEMENT DELINEATION PLANS
333-354	SIGN PLANS
355-360	SUMMARY OF QUANTITIES
361-387	RETAINING WALL PLANS, TYPICAL, DETAILS, QUANTITIES AND LOG OF TEST BORING SHEET
388-417	HIGHWAY PLANTING
418-465	ELECTRICAL PLANS
466	SPECIAL ELECTRICAL STRUCTURES
467-516	REVISED AND NEW STANDARD PLANS

STRUCTURE PLANS

517-532	NAPLES STREET UC (WIDEN) Br No. 57-0634
533-553	TELEGRAPH CANYON ROAD UC (WIDEN) Br No. 57-0635
554-571	BONITA ROAD UC (WIDEN) Br No. 57-0637
572-575	SWEETWATER RIVER BRIDGE Br No. 57-0638RL
576-594	ROUTE 805/54 SEPARATION (WIDEN) Br No. 57-0746
595-614	SWEETWATER ROAD UC (WIDEN) Br No. 57-0639
615-635	EUCLID AVENUE UC (WIDEN) Br No. 57-0640

THE STANDARD PLANS LIST APPLICABLE TO THIS CONTRACT IS INCLUDED IN THE NOTICE TO BIDDERS AND SPECIAL PROVISIONS BOOK.

LOCATION MAP

BEGIN CONSTRUCTION (ROUTE 805)
Sta "A" 321+00 PM 5.5

LOCATION OF CONSTRUCTION (ROUTE 54)
Sta "11SD54" 142+58 PM 1.8

End Work
Sta "A" 787+00

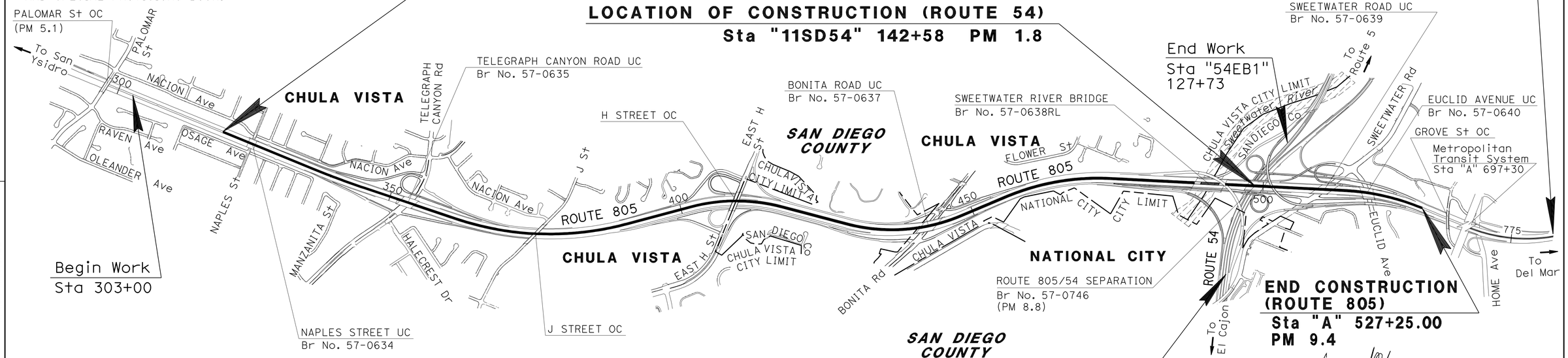

Begin Work
Sta 303+00

END CONSTRUCTION (ROUTE 805)
Sta "A" 527+25.00
PM 9.4

Begin Work
Sta "11SD54" 161+00

ESA ENVIRONMENTALLY SENSITIVE AREA

NO SCALE

THE CONTRACTOR SHALL POSSESS THE CLASS (OR CLASSES) OF LICENSE AS SPECIFIED IN THE "NOTICE TO BIDDERS."

PROJECT MANAGER RAMON MARTINEZ

DESIGN ENGINEER ROGER CARLIN

PROJECT ENGINEER / REGISTERED CIVIL ENGINEER — DATE 08-25-11

REGISTERED PROFESSIONAL ENGINEER WALDO LOPEZ No. C58085 Exp. 6-30-12 CIVIL STATE OF CALIFORNIA

December 5, 2011
PLANS APPROVAL DATE

THE STATE OF CALIFORNIA OR ITS OFFICERS OR AGENTS SHALL NOT BE RESPONSIBLE FOR THE ACCURACY OR COMPLETENESS OF SCANNED COPIES OF THIS PLAN SHEET.

CONTRACT No.	11-2T1814
PROJECT ID	1100020050

LAST REVISION 08-25-11 DATE PLOTTED => 09-DEC-2011 TIME PLOTTED => 11:25

Dist	COUNTY	ROUTE	POST MILES TOTAL PROJECT	SHEET No.	TOTAL SHEETS
11	SD	54,805	1.8,5.5/9.4	2	635

REGISTERED CIVIL ENGINEER 08-25-11 DATE

12-5-11
PLANS APPROVAL DATE

REGISTERED PROFESSIONAL ENGINEER WALDO LOPEZ No. C58085 Exp. 6-30-12 CIVIL STATE OF CALIFORNIA

THE STATE OF CALIFORNIA OR ITS OFFICERS OR AGENTS SHALL NOT BE RESPONSIBLE FOR THE ACCURACY OR COMPLETENESS OF SCANNED COPIES OF THIS PLAN SHEET.

LEGEND:

HMA-A - HOT MIX ASPHALT (TYPE A).
AB CL2 - AGGREGATE BASE CLASS 2.
HOV - HIGH OCCUPANCY VEHICLE LANES

DESIGN DESIGNATION:

ADT (2010) = 133,100 D = 52%
ADT (2030) = 160,000 T < T 5%
DHV = 21,600 V = 70 MPH

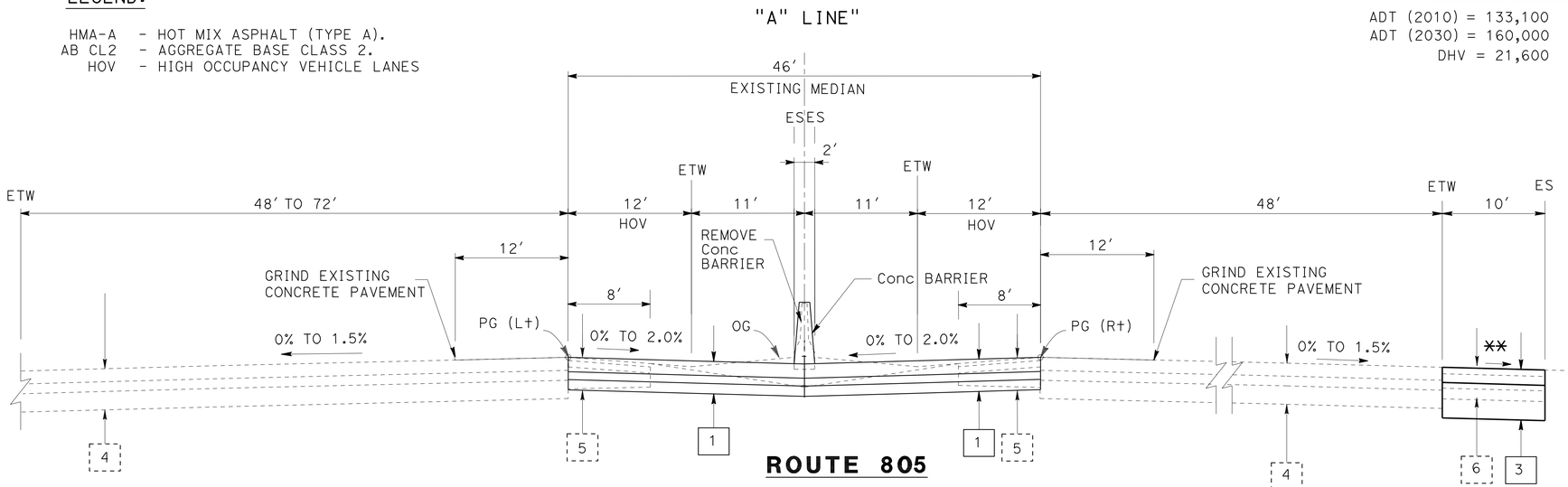

ROUTE 805

Sta 327+16.03 TO Sta 334+50.00
Sta 450+12.00 TO Sta 454+88.86
Sta 476+50.00 TO Sta 486+50.00

483+00.00 TO 486+50.00

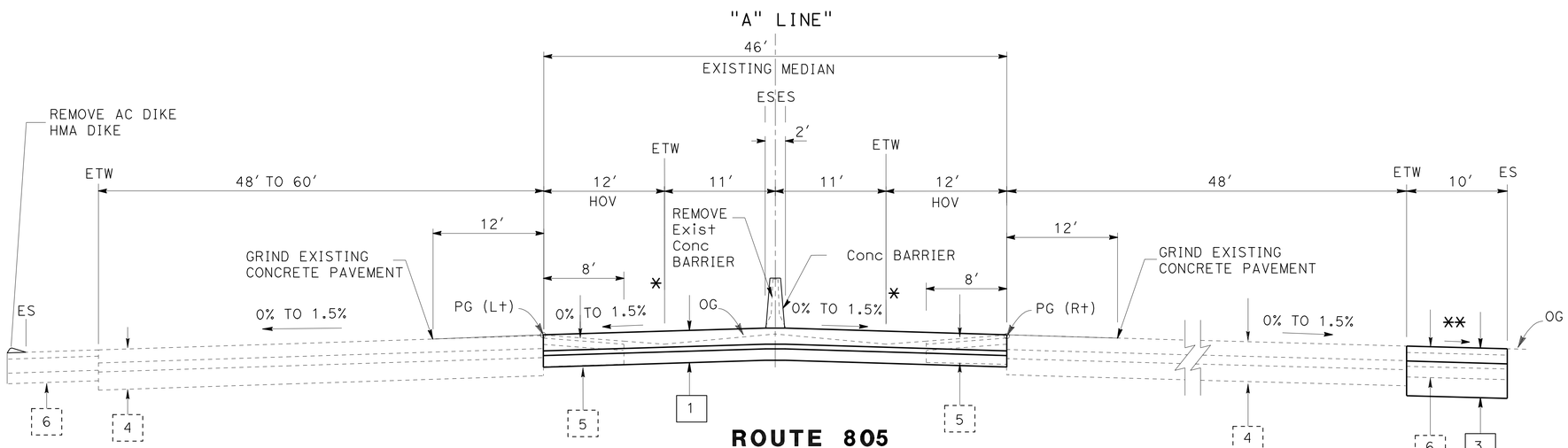

ROUTE 805

350+44.10 TO 350+84.10

323+00.00 TO 323+72.80
325+57.50 TO 327+16.03
349+46.00 TO 351+06.47
354+34.30 TO 355+50.00
486+50.00 TO 488+42.50
493+68.66 TO 496+93.34
500+63.06 TO 508+49.71
512+33.24 TO 513+05.00

486+50.00 TO 488+00.84
493+33.30 TO 495+00.00

PAVEMENT STRUCTURAL SECTIONS

1
- 0.80' JPCP
- 0.25' HMA-A
- 0.55' AB CL2

2
- 0.60' HMA-A
- 1.90' AB CL2

3
- 0.70' HMA-A
- 2.35' AB CLASS 2

4
- 0.65' PCC
- 0.45' CTB CLASS A
- 0.90' AS CLASS 4

5
- 0.20' AC
- 0.45' AB CLASS 2
- Var AS CLASS 4

6
- 0.25' AC
- 0.45' AB CLASS 2
- Var AS CLASS 4

NOTES:

1. FOR TYPES AND LOCATIONS OF CONCRETE BARRIER, AND REMOVE CONCRETE BARRIER SEE LAYOUT AND QUANTITY SHEETS.
2. FOR TYPES AND LOCATIONS OF RETAINING WALL SEE RETAINING WALL PLANS.
3. SUPERELEVATIONS ARE SHOWN ON THE SUPERELEVATION DIAGRAMS.
4. DIMENSIONS OF THE PAVEMENT STRUCTURES (STRUCTURAL SECTIONS) ARE SUBJECT TO TOLERANCES SPECIFIED IN THE STANDARD SPECIFICATIONS.

* MATCH EXISTING TRAVELED WAY CROSS SLOPE
** MATCH EXISTING

TYPICAL CROSS SECTIONS

NO SCALE

X-1

STATE OF CALIFORNIA - DEPARTMENT OF TRANSPORTATION
Caltrans PROJECT DEVELOPMENT

FUNCTIONAL SUPERVISOR: ROGER CARLIN
CALCULATED-DESIGNED BY: WALDO R. LOPEZ
CHECKED BY: WALDO R. LOPEZ
REVISED BY
DATE REVISED

LAST REVISION 08-25-11
DATE PLOTTED => 09-DEC-2011
TIME PLOTTED => 13:34

Dist	COUNTY	ROUTE	POST MILES TOTAL PROJECT	SHEET No.	TOTAL SHEETS
11	SD	54,805	1.8,5.5/9.4	3	635

REGISTERED CIVIL ENGINEER 08-25-11 DATE

12-5-11
PLANS APPROVAL DATE

REGISTERED PROFESSIONAL ENGINEER WALDO LOPEZ No. C58085 Exp. 6-30-12 CIVIL STATE OF CALIFORNIA

THE STATE OF CALIFORNIA OR ITS OFFICERS OR AGENTS SHALL NOT BE RESPONSIBLE FOR THE ACCURACY OR COMPLETENESS OF SCANNED COPIES OF THIS PLAN SHEET.

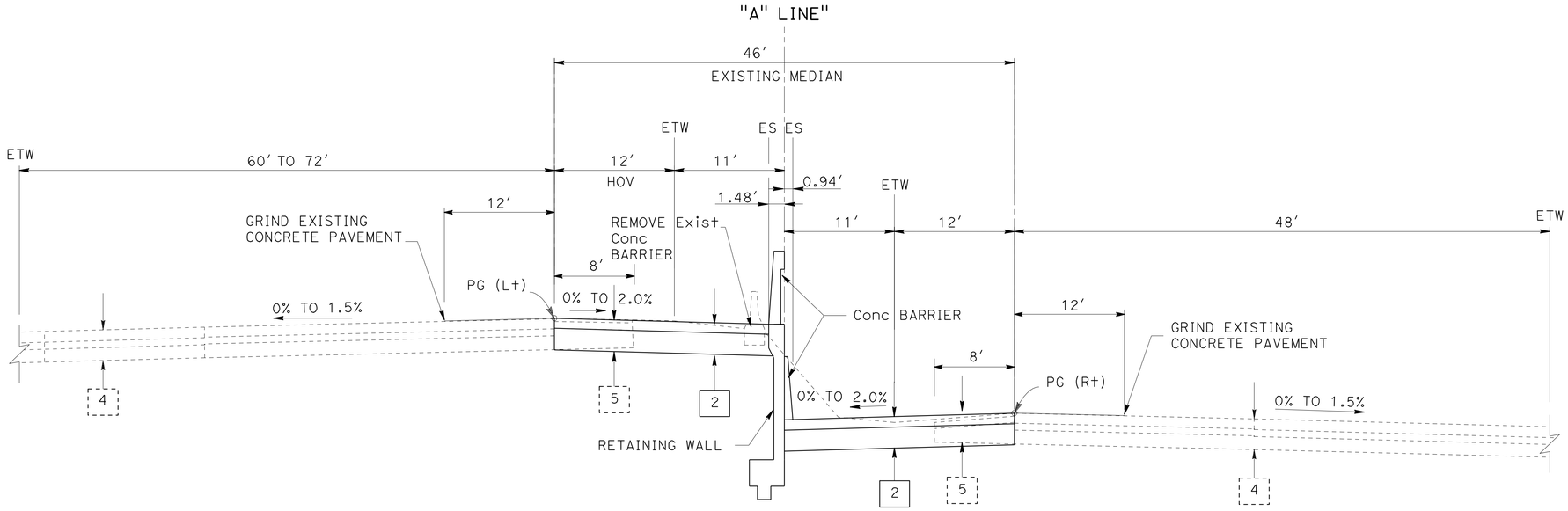

ROUTE 805

Sta 390+48.97 TO Sta 399+63.23
Sta 419+19.83 TO Sta 426+15.00

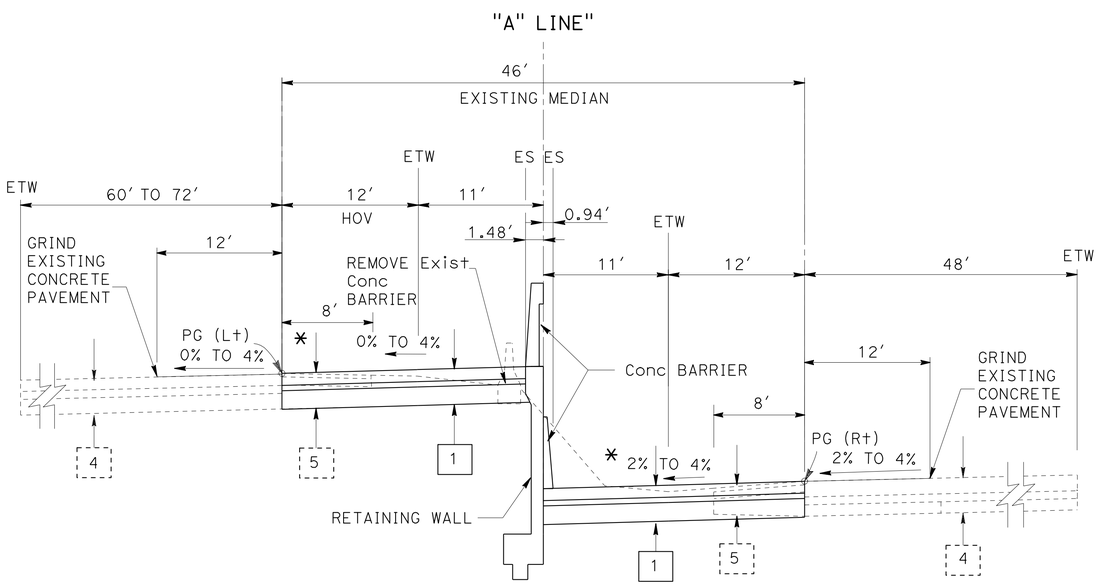

ROUTE 805

Sta 376+00.00 TO Sta 387+00
Sta 430+00 TO Sta 433+70.00

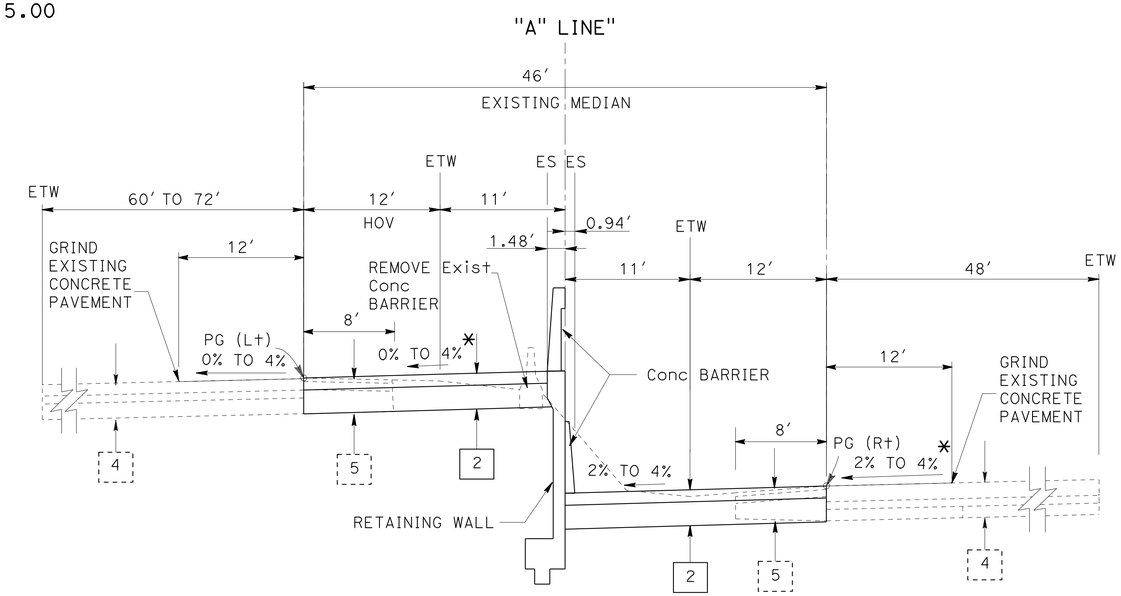

ROUTE 805

Sta 387+00 TO Sta 390+48.97
Sta 426+38.90 TO Sta 430+00

* MATCH EXISTING TRAVELED WAY CROSS SLOPE

TYPICAL CROSS SECTIONS

NO SCALE

X-2

STATE OF CALIFORNIA - DEPARTMENT OF TRANSPORTATION
Caltrans PROJECT DEVELOPMENT

FUNCTIONAL SUPERVISOR: ROGER CARLIN
CALCULATED-DESIGNED BY: WALDO R. LOPEZ
CHECKED BY: WALDO R. LOPEZ
REVISED BY
DATE REVISED

LAST REVISION 08-25-11
DATE PLOTTED => 09-DEC-2011
TIME PLOTTED => 13:34

Dist	COUNTY	ROUTE	POST MILES TOTAL PROJECT	SHEET No.	TOTAL SHEETS
11	SD	54,805	1.8,5.5/9.4	4	635

REGISTERED CIVIL ENGINEER 08-25-11 DATE

12-5-11
PLANS APPROVAL DATE

REGISTERED PROFESSIONAL ENGINEER
WALDO LOPEZ
No. C58085
Exp. 6-30-12
CIVIL
STATE OF CALIFORNIA

THE STATE OF CALIFORNIA OR ITS OFFICERS OR AGENTS SHALL NOT BE RESPONSIBLE FOR THE ACCURACY OR COMPLETENESS OF SCANNED COPIES OF THIS PLAN SHEET.

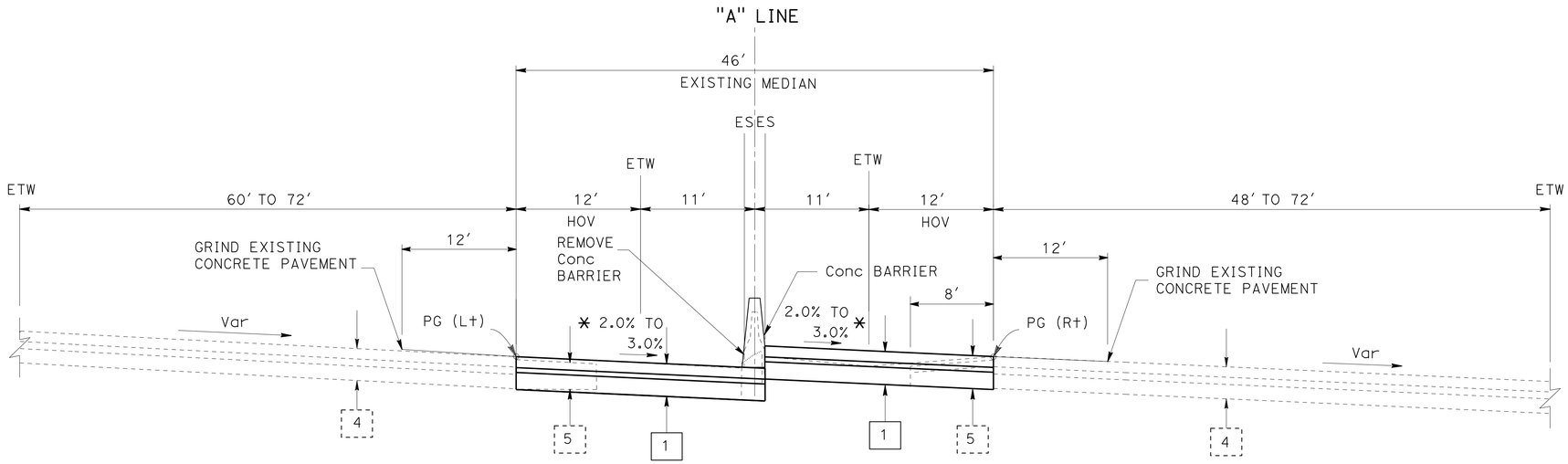

ROUTE 805

Sta 454+85.96 TO Sta 476+50.00

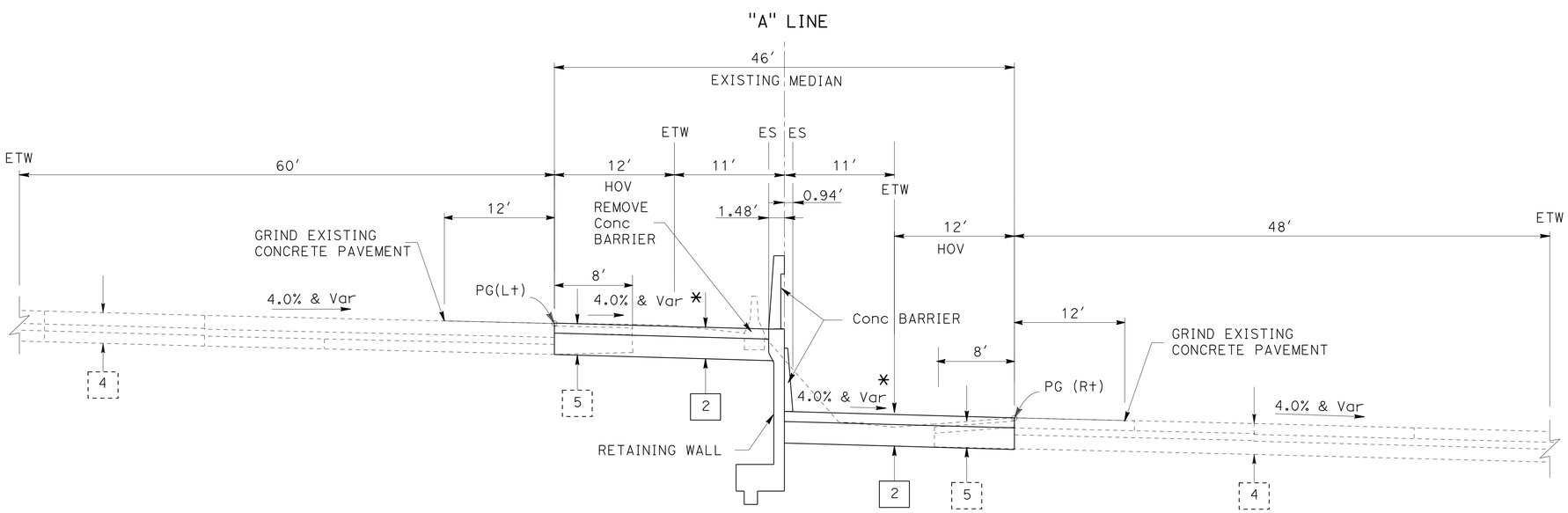

ROUTE 805

Sta 399+63.23 TO Sta 419+19.83

* MATCH EXISTING TRAVELED WAY CROSS SLOPE

TYPICAL CROSS SECTIONS

NO SCALE

X-3

STATE OF CALIFORNIA - DEPARTMENT OF TRANSPORTATION
Caltrans PROJECT DEVELOPMENT

FUNCTIONAL SUPERVISOR: ROGER CARLIN

CALCULATED-DESIGNED BY: WALDO R. LOPEZ
CHECKED BY: WALDO R. LOPEZ

REVISED BY | DATE REVISED

LAST REVISION 08-25-11 | DATE PLOTTED => 09-DEC-2011 | TIME PLOTTED => 13:34

Dist	COUNTY	ROUTE	POST MILES TOTAL PROJECT	SHEET No.	TOTAL SHEETS
11	SD	54,805	1.8,5.5/9.4	5	635

REGISTERED CIVIL ENGINEER 08-25-11 DATE

12-5-11
PLANS APPROVAL DATE

REGISTERED PROFESSIONAL ENGINEER WALDO LOPEZ No. C58085 Exp. 6-30-12 CIVIL STATE OF CALIFORNIA

THE STATE OF CALIFORNIA OR ITS OFFICERS OR AGENTS SHALL NOT BE RESPONSIBLE FOR THE ACCURACY OR COMPLETENESS OF SCANNED COPIES OF THIS PLAN SHEET.

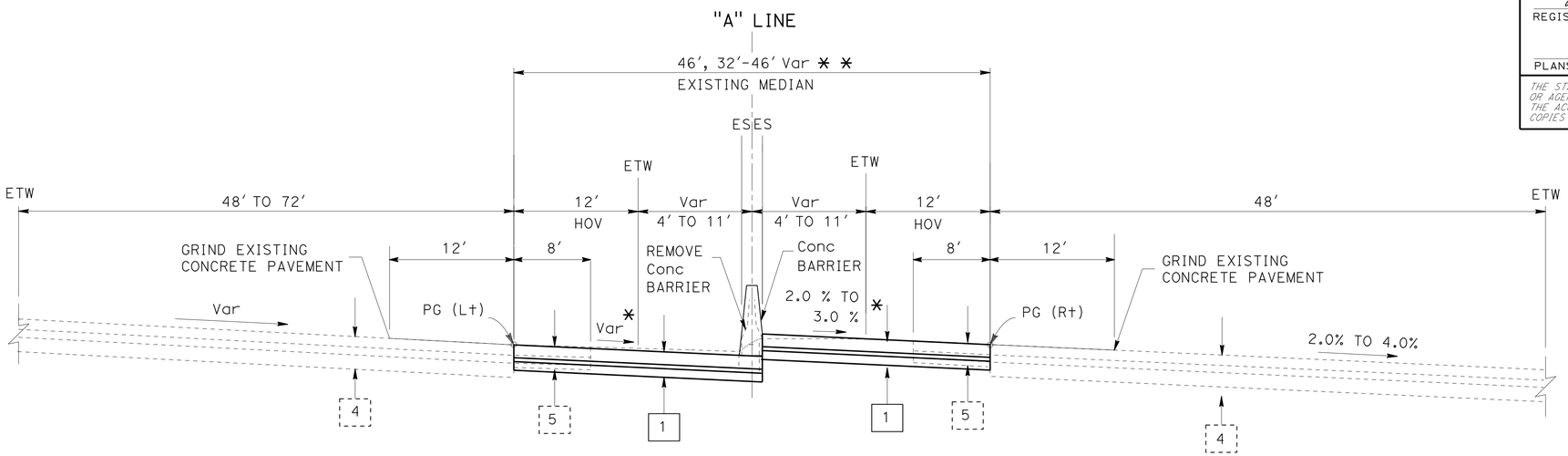

ROUTE 805

354+34.30 TO 355+00.00
454+88.86 TO 462+57.00
513+05.00 TO 516+20.31
* * 519+06.20 TO 527+25.00

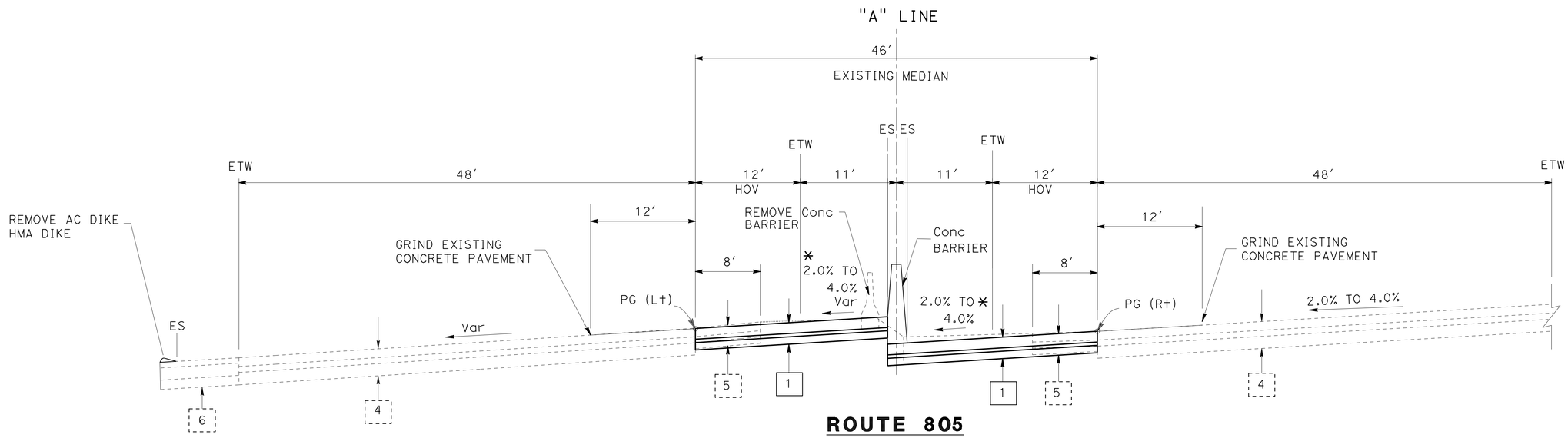

ROUTE 805

362+87.00 TO 364+50.00

Sta 334+89.00 TO Sta 349+46.00
Sta 355+50.00 TO Sta 374+40.00
Sta 433+70.00 TO Sta 440+44.24
Sta 444+47.37 TO Sta 450+12.00

* MATCH EXISTING TRAVELED WAY CROSS SLOPE

TYPICAL CROSS SECTIONS

NO SCALE

X-4

STATE OF CALIFORNIA - DEPARTMENT OF TRANSPORTATION
Caltrans PROJECT DEVELOPMENT

FUNCTIONAL SUPERVISOR: ROGER CARLIN
CALCULATED-DESIGNED BY: WALDO R. LOPEZ
CHECKED BY: WALDO R. LOPEZ
REVISED BY
DATE REVISED

LAST REVISION 08-25-11
DATE PLOTTED => 09-DEC-2011
TIME PLOTTED => 13:34

Dist	COUNTY	ROUTE	POST MILES TOTAL PROJECT	SHEET No.	TOTAL SHEETS
11	SD	54,805	1.8,5.5/9.4	6	635

08-16-11
PROFESSIONAL LAND SURVEYOR DATE

12-5-11
PLANS APPROVAL DATE

PROFESSIONAL LAND SURVEYOR MARK D. PHELAN L.S.7111 EXP:12-31-12 STATE OF CALIFORNIA

THE STATE OF CALIFORNIA OR ITS OFFICERS OR AGENTS SHALL NOT BE RESPONSIBLE FOR THE ACCURACY OR COMPLETENESS OF SCANNED COPIES OF THIS PLAN SHEET.

NOTES:

1. CONTACT DISTRICT 11'S LAND SURVEY DIVISION, PHONE (858)467-4305, FOR ADDITIONAL INFORMATION OR QUERIES REGARDING THIS SURVEY PROJECT CONTROL.
2. BASIS OF BEARINGS AND COORDINATES
   FOR THIS PROJECT IS THE CALIFORNIA COORDINATE SYSTEM OF 1983, NSRS 2007 EPOCH, ZONE 6. PROJECT CONTROL STATIONS WERE ESTABLISHED ACCORDING TO CRITERIA SET FORTH IN THE FEDERAL GEODETIC CONTROL SUBCOMMITTEE'S "GEOMETRIC GEODETIC ACCURACY STANDARDS AND SPECIFICATIONS FOR USING GPS RELATIVE POSITIONING TECHNIQUES" REPRINTED AUGUST 1, 1989.

   THIS GPS STATIC SURVEY WAS CONSTRAINED TO THE FOLLOWING CORS STATIONS: "NSSS", "P472", "P473", "SIO3" AND "DSME"
3. BASIS OF ELEVATIONS
   FOR THIS PROJECT IS THE NORTH AMERICAN VERTICAL DATUM OF 1988 (NAVD88). ELEVATIONS ARE ESTABLISHED BY STATIC GPS METHODS CONSTRAINING TO STATION "NSSS".
4. IN THE EVENT GPS MACHINE CONTROL/GUIDANCE IS USED FOR THIS PROJECT, THE CONTRACTOR SHALL CONTACT OR MEET WITH DISTRICT 11'S LAND SURVEY DIVISION TO OBTAIN THE CONTROL NECESSARY TO ESTABLISH A PROJECT CALIBRATION COMPATIBLE FOR ALL USERS.

ABBREVIATIONS:

CADT CALIFORNIA DEPARTMENT OF TRANSPORTATION
IP IRON PIPE

LEGEND:

1 1ST ORDER STATION

CONTROL FOR DESIGN AND CONSTRUCTION

STATION DESIGNATION	ORDER	NORTHING	EASTING	ELEVATION	DESCRIPTION
805-5.2	1ST	1,805,309.17	6,318,820.95	292.49	2¼" CADT DISC IN DRAIN STRUCTURE
805-5.6	1ST	1,807,003.23	6,318,208.09	322.90	2¼" CADT DISC IN BARRIER WALL
805-5.7	1ST	1,807,767.36	6,318,124.01	330.06	2¼" CADT DISC IN CONCRETE CURB
805-6.2	1ST	1,810,034.46	6,316,810.20	248.93	2¼" CADT DISC SET IN 2" IP
805-6.7	1ST	1,812,393.73	6,315,660.32	216.41	2¼" CADT DISC SET IN 2" IP
805-7.2	1ST	1,813,616.64	6,313,450.39	184.28	2¼" CADT DISC IN CONCRETE SIDEWALK
805-7.6	1ST	1,815,987.22	6,312,629.96	80.43	2¼" CADT DISC SET IN 2" IP
805-8.2	1ST	1,817,718.85	6,309,988.28	50.55	2¼" CADT DISC IN 1" IP IN AC
54/805	1ST	1,820,195.63	6,308,124.39	64.26	2¼" CADT DISC SET IN 2" IP
805-9.3	1ST	1,822,435.48	6,306,579.51	76.47	2¼" CADT DISC IN CONCRETE GORE

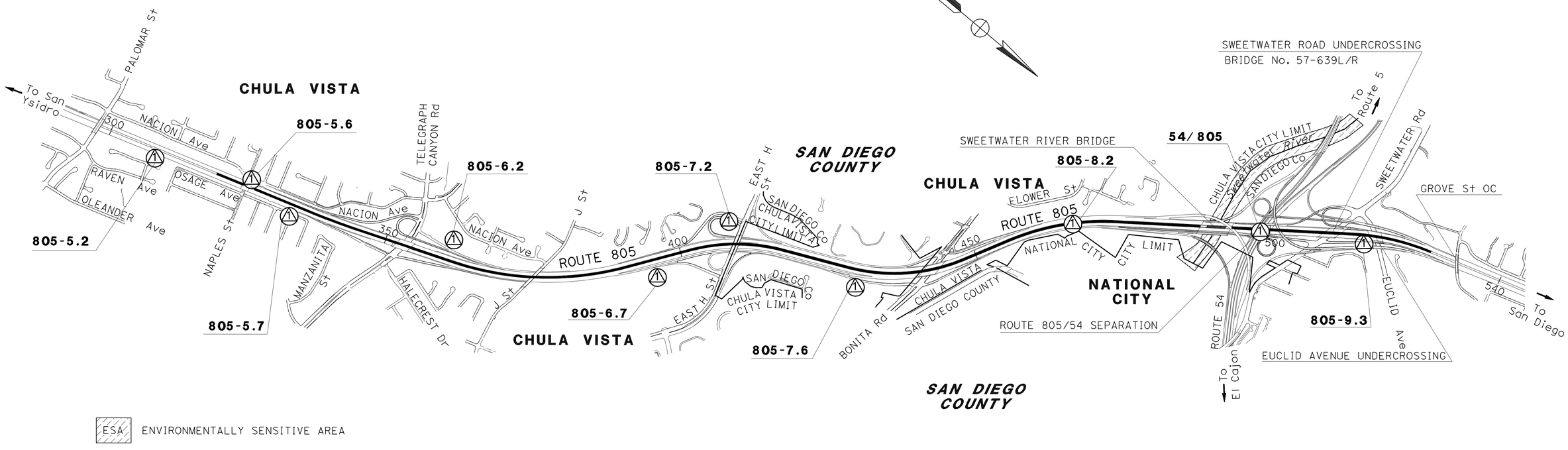

APPROVED FOR PROJECT CONTROL INFORMATION ONLY

PROJECT CONTROL

NO SCALE

PC-1

REVISED BY | DATE REVISED
MARK PHELAN | NED SALMAN
CALCULATED-DESIGNED BY | CHECKED BY
FUNCTIONAL SUPERVISOR: BRUCE URQUHART

STATE OF CALIFORNIA - DEPARTMENT OF TRANSPORTATION
Caltrans LAND SURVEYS DIVISION

LAST REVISION 04-28-11 | DATE PLOTTED => 09-DEC-2011 | TIME PLOTTED => 13:34

Dist	COUNTY	ROUTE	POST MILES TOTAL PROJECT	SHEET No.	TOTAL SHEETS
11	SD	54,805	1.8,5.5/9.4	7	635

REGISTERED CIVIL ENGINEER 08-25-11 DATE

12-5-11
PLANS APPROVAL DATE

REGISTERED PROFESSIONAL ENGINEER WALDO LOPEZ No. C58085 Exp. 6-30-12 CIVIL STATE OF CALIFORNIA

THE STATE OF CALIFORNIA OR ITS OFFICERS OR AGENTS SHALL NOT BE RESPONSIBLE FOR THE ACCURACY OR COMPLETENESS OF SCANNED COPIES OF THIS PLAN SHEET.

NOTES:

1. FOR ACCURATE RIGHT OF WAY DATA, CONTACT RIGHT OF WAY ENGINEERING AT THE DISTRICT OFFICE.
2. FOR RETAINING WALL SEE RETAINING WALL PLANS.
3. FOR BRIDGES SEE STRUCTURE PLANS.
4. FOR LOCATION OF WATER METER REMOVAL WORK SEE IRRIGATION REMOVAL PLANS.
5. FOR LOCATION OF WATER METER WORK SEE IRRIGATION PLANS.

LEGEND:

- ESA — ENVIRONMENTALLY SENSITIVE AREA
- GRIND EXISTING CONCRETE PAVEMENT
- MINOR CONCRETE (TEXTURED PAVING) SEE CONSTRUCTION DETAILS
- TFESA — TEMPORARY FENCE (TYPE ESA)
- (X) MBGR (SEE SUMMARY OF QUANTITY SHEETS FOR MORE INFORMATION)
- (X) SINGLE THRIE BEAM BARRIER (SEE SUMMARY OF QUANTITY SHEETS FOR MORE INFORMATION)
- [X] STRUCTURAL SECTION (SEE TYPICAL CROSS SECTIONS)
- (X) CURVE DATA
- I/C IRRIGATION CROSSOVER
- AI/C ABANDON IRRIGATION CROSSOVER

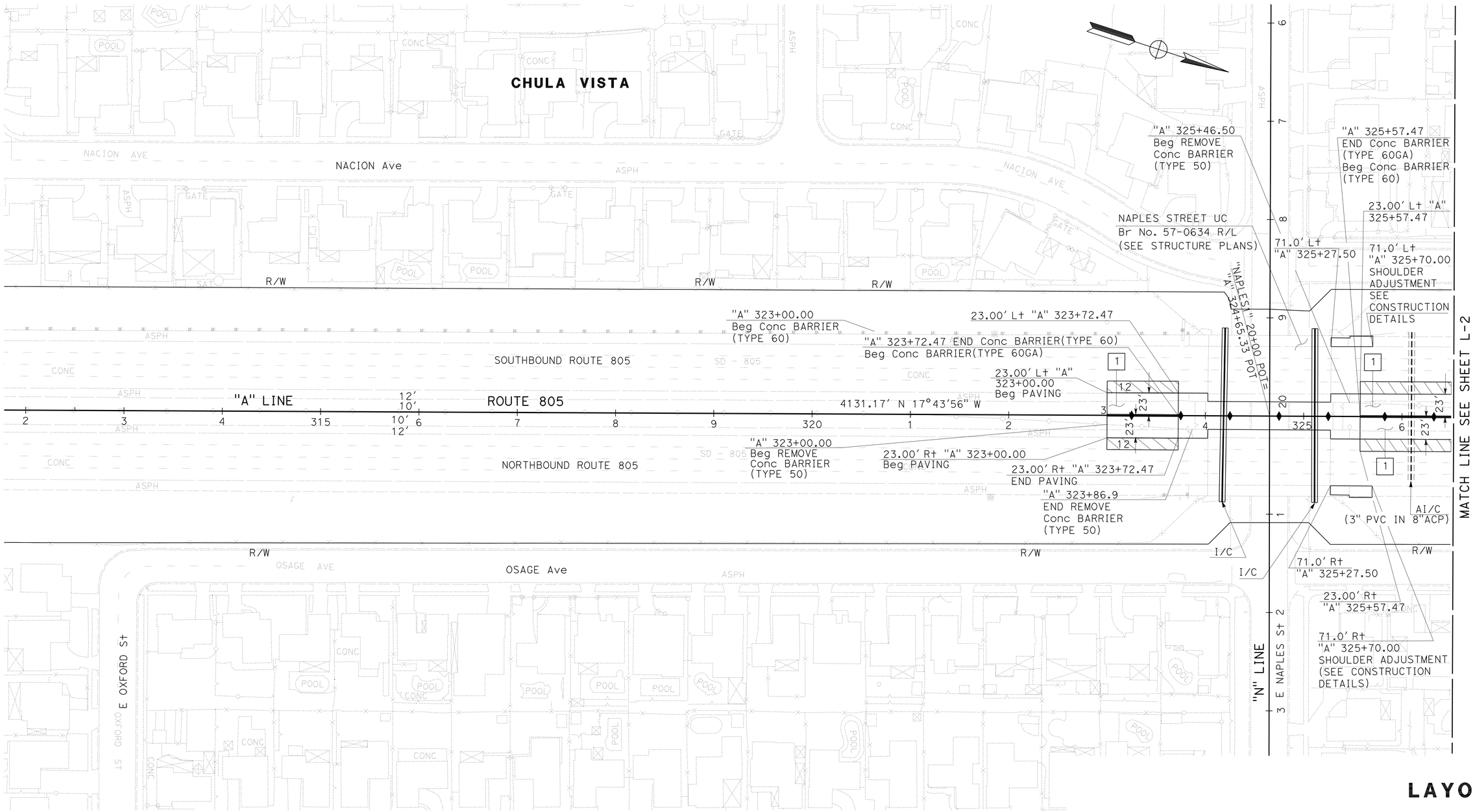

LAYOUT

SCALE: 1" = 50' **L-1**

STATE OF CALIFORNIA - DEPARTMENT OF TRANSPORTATION
Caltrans PROJECT DEVELOPMENT

FUNCTIONAL SUPERVISOR: ROGER CARLIN
CALCULATED-DESIGNED BY: WALDO R. LOPEZ
CHECKED BY: WALDO R. LOPEZ
REVISED BY
DATE REVISED

LAST REVISION 08-25-11
DATE PLOTTED => 09-DEC-2011
TIME PLOTTED => 13:34

Dist	COUNTY	ROUTE	POST MILES TOTAL PROJECT	SHEET No.	TOTAL SHEETS
11	SD	54,805	1.8,5.5/9.4	8	635

REGISTERED CIVIL ENGINEER 08-25-11 DATE

12-5-11
PLANS APPROVAL DATE

REGISTERED PROFESSIONAL ENGINEER WALDO LOPEZ No. C58085 Exp. 6-30-12 CIVIL STATE OF CALIFORNIA

THE STATE OF CALIFORNIA OR ITS OFFICERS OR AGENTS SHALL NOT BE RESPONSIBLE FOR THE ACCURACY OR COMPLETENESS OF SCANNED COPIES OF THIS PLAN SHEET.

NOTE:

FOR ACCURATE RIGHT OF WAY DATA, CONTACT RIGHT OF WAY ENGINEERING AT THE DISTRICT OFFICE.

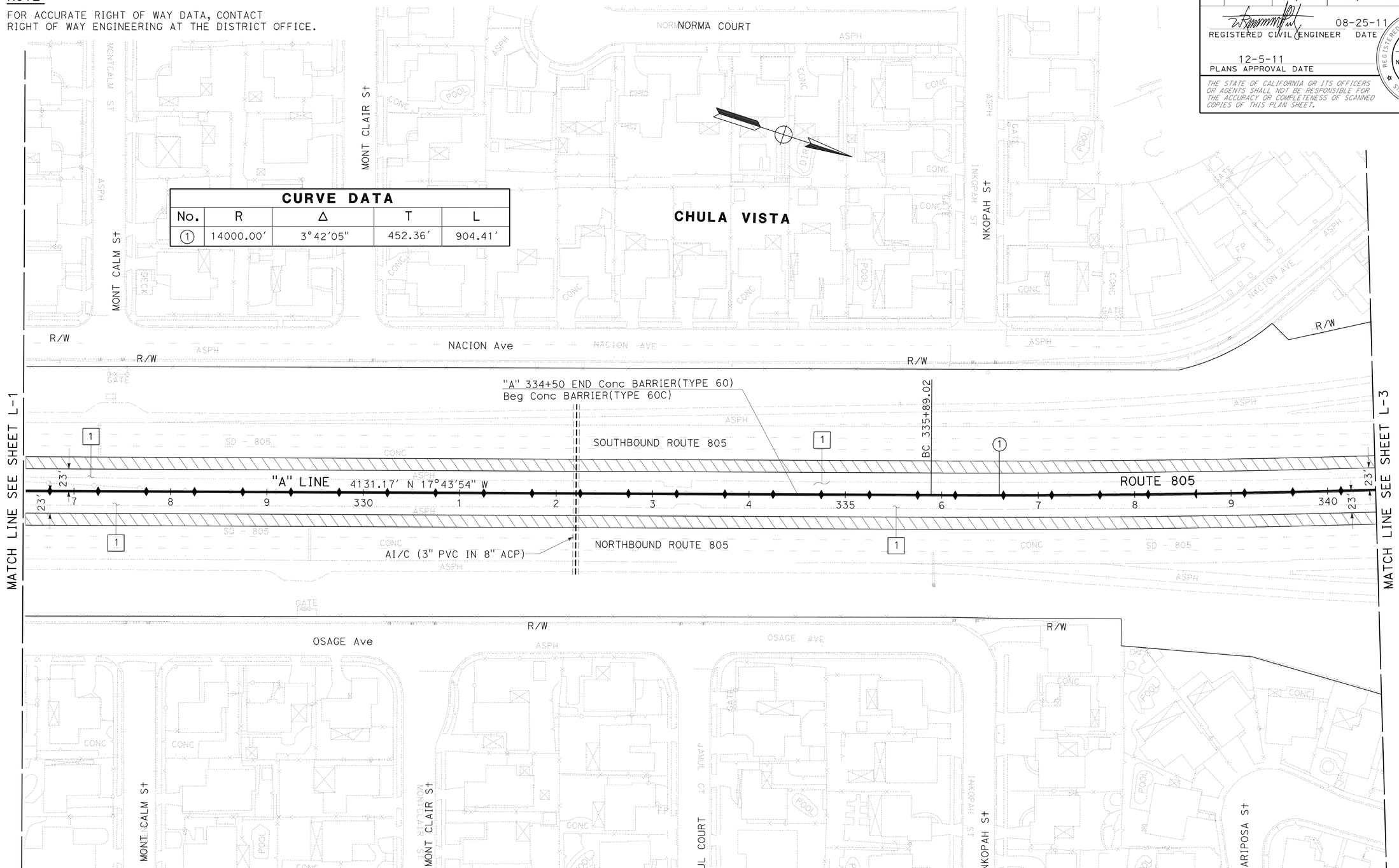

LAYOUT

SCALE: 1" = 50' **L-2**

REVISED BY	DATE REVISED
WALDO R. LOPEZ	WALDO R. LOPEZ

CALCULATED-DESIGNED BY WALDO R. LOPEZ
CHECKED BY WALDO R. LOPEZ

FUNCTIONAL SUPERVISOR ROGER CARLIN

STATE OF CALIFORNIA - DEPARTMENT OF TRANSPORTATION
Caltrans PROJECT DEVELOPMENT

LAST REVISION 08-25-11 | DATE PLOTTED => 09-DEC-2011 | TIME PLOTTED => 13:34

Dist	COUNTY	ROUTE	POST MILES TOTAL PROJECT	SHEET No.	TOTAL SHEETS
11	SD	54,805	1.8,5.5/9.4	9	635

REGISTERED CIVIL ENGINEER 08-25-11 DATE

12-5-11
PLANS APPROVAL DATE

REGISTERED PROFESSIONAL ENGINEER WALDO LOPEZ No. C58085 Exp. 6-30-12 CIVIL STATE OF CALIFORNIA

THE STATE OF CALIFORNIA OR ITS OFFICERS OR AGENTS SHALL NOT BE RESPONSIBLE FOR THE ACCURACY OR COMPLETENESS OF SCANNED COPIES OF THIS PLAN SHEET.

NOTE:

FOR ACCURATE RIGHT OF WAY DATA, CONTACT RIGHT OF WAY ENGINEERING AT THE DISTRICT OFFICE.

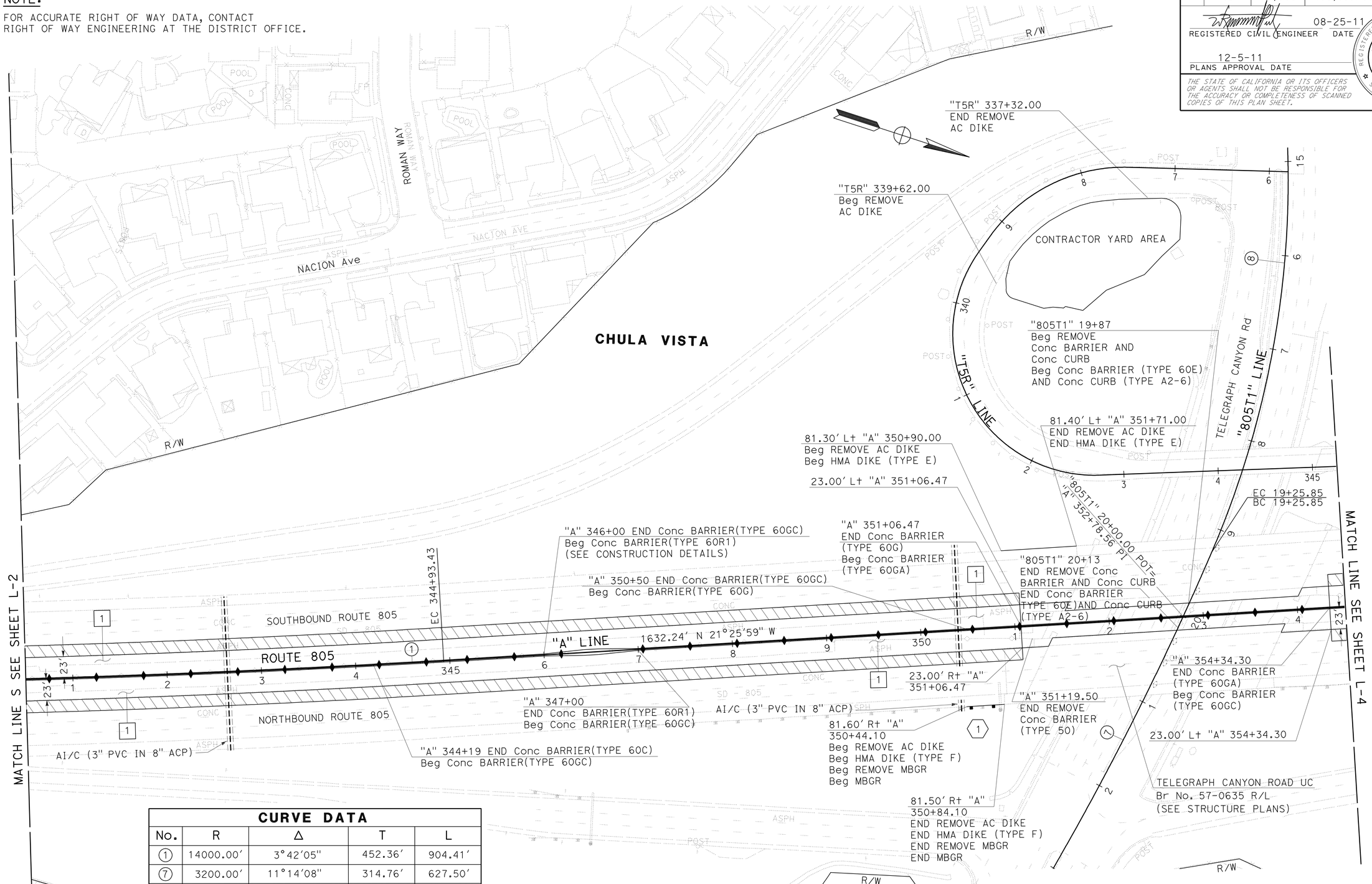

CURVE DATA

No.	R	Δ	T	L
1	14000.00'	3°42'05"	452.36'	904.41'
7	3200.00'	11°14'08"	314.76'	627.50'
8	1000.00'	39°27'09"	358.57'	688.58'

LAYOUT

SCALE: 1" = 50' **L-3**

STATE OF CALIFORNIA - DEPARTMENT OF TRANSPORTATION
Caltrans PROJECT DEVELOPMENT

FUNCTIONAL SUPERVISOR: ROGER CARLIN
CALCULATED-DESIGNED BY: WALDO R. LOPEZ
CHECKED BY: WALDO R. LOPEZ
REVISED BY
DATE REVISED

LAST REVISION 08-25-11
DATE PLOTTED => 09-DEC-2011
TIME PLOTTED => 13:34

Dist	COUNTY	ROUTE	POST MILES TOTAL PROJECT	SHEET No.	TOTAL SHEETS
11	SD	54,805	1.8,5.5/9.4	10	635

REGISTERED CIVIL ENGINEER 08-25-11 DATE

12-5-11
PLANS APPROVAL DATE

REGISTERED PROFESSIONAL ENGINEER WALDO LOPEZ No. C58085 Exp. 6-30-12 CIVIL STATE OF CALIFORNIA

THE STATE OF CALIFORNIA OR ITS OFFICERS OR AGENTS SHALL NOT BE RESPONSIBLE FOR THE ACCURACY OR COMPLETENESS OF SCANNED COPIES OF THIS PLAN SHEET.

NOTE:

FOR ACCURATE RIGHT OF WAY DATA, CONTACT RIGHT OF WAY ENGINEERING AT THE DISTRICT OFFICE.

CURVE DATA

No.	R	Δ	T	L
2	5000.00′	33°29′55"	1504.76′	2923.30′

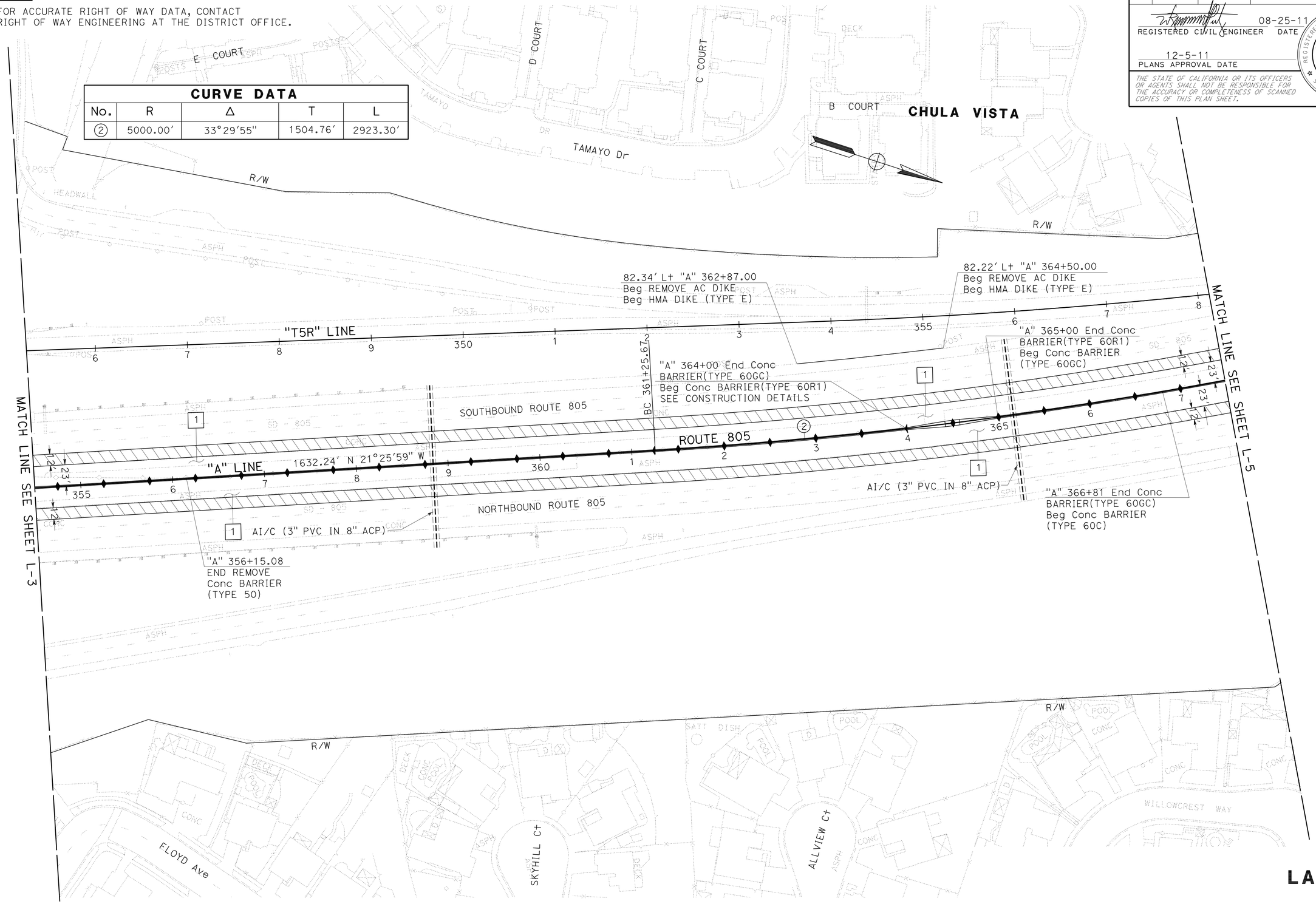

LAYOUT

SCALE: 1" = 50′ **L-4**

STATE OF CALIFORNIA - DEPARTMENT OF TRANSPORTATION
Caltrans PROJECT DEVELOPMENT

FUNCTIONAL SUPERVISOR: ROGER CARLIN
CALCULATED-DESIGNED BY: WALDO R. LOPEZ
CHECKED BY: WALDO R. LOPEZ
REVISED BY
DATE REVISED

LAST REVISION 08-25-11
DATE PLOTTED => 09-DEC-2011
TIME PLOTTED => 13:35

Dist	COUNTY	ROUTE	POST MILES TOTAL PROJECT	SHEET No.	TOTAL SHEETS
11	SD	54,805	1.8,5.5/9.4	11	635

REGISTERED CIVIL ENGINEER 08-25-11 DATE

12-5-11
PLANS APPROVAL DATE

REGISTERED PROFESSIONAL ENGINEER WALDO LOPEZ No. C58085 Exp. 6-30-12 CIVIL STATE OF CALIFORNIA

THE STATE OF CALIFORNIA OR ITS OFFICERS OR AGENTS SHALL NOT BE RESPONSIBLE FOR THE ACCURACY OR COMPLETENESS OF SCANNED COPIES OF THIS PLAN SHEET.

NOTE:

FOR ACCURATE RIGHT OF WAY DATA, CONTACT RIGHT OF WAY ENGINEERING AT THE DISTRICT OFFICE.

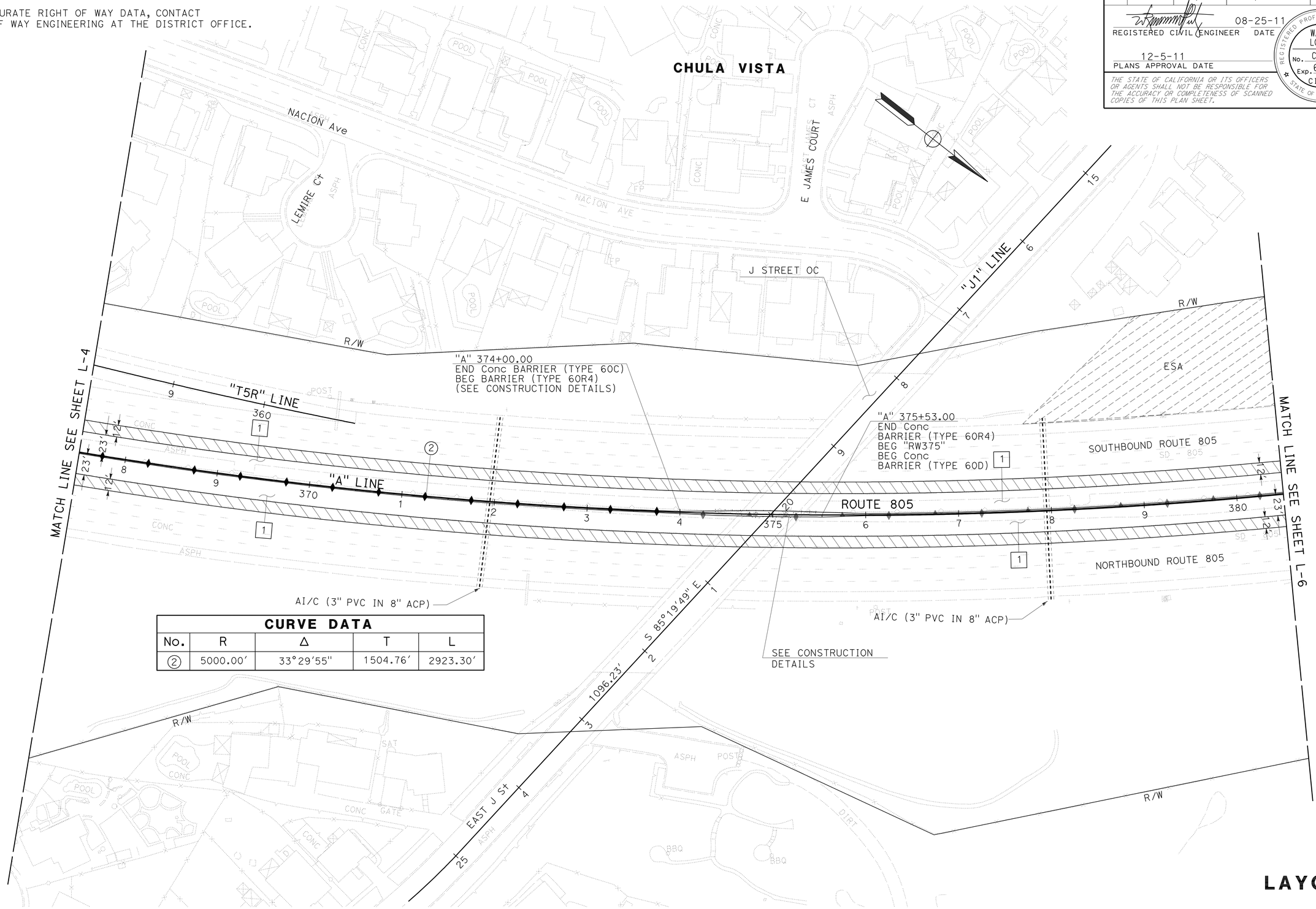

CURVE DATA

No.	R	Δ	T	L
②	5000.00'	33°29'55"	1504.76'	2923.30'

LAYOUT

SCALE: 1" = 50' **L-5**

STATE OF CALIFORNIA - DEPARTMENT OF TRANSPORTATION
Caltrans PROJECT DEVELOPMENT

FUNCTIONAL SUPERVISOR: ROGER CARLIN
CALCULATED-DESIGNED BY: WALDO R. LOPEZ
CHECKED BY: WALDO R. LOPEZ
REVISED BY
DATE REVISED

LAST REVISION 08-25-11
DATE PLOTTED => 09-DEC-2011
TIME PLOTTED => 13:35

Dist	COUNTY	ROUTE	POST MILES TOTAL PROJECT	SHEET No.	TOTAL SHEETS
11	SD	54,805	1.8,5.5/9.4	12	635

REGISTERED CIVIL ENGINEER 08-25-11 DATE

12-5-11
PLANS APPROVAL DATE

REGISTERED PROFESSIONAL ENGINEER WALDO LOPEZ No. C58085 Exp. 6-30-12 CIVIL STATE OF CALIFORNIA

THE STATE OF CALIFORNIA OR ITS OFFICERS OR AGENTS SHALL NOT BE RESPONSIBLE FOR THE ACCURACY OR COMPLETENESS OF SCANNED COPIES OF THIS PLAN SHEET.

NOTE:

FOR ACCURATE RIGHT OF WAY DATA, CONTACT RIGHT OF WAY ENGINEERING AT THE DISTRICT OFFICE.

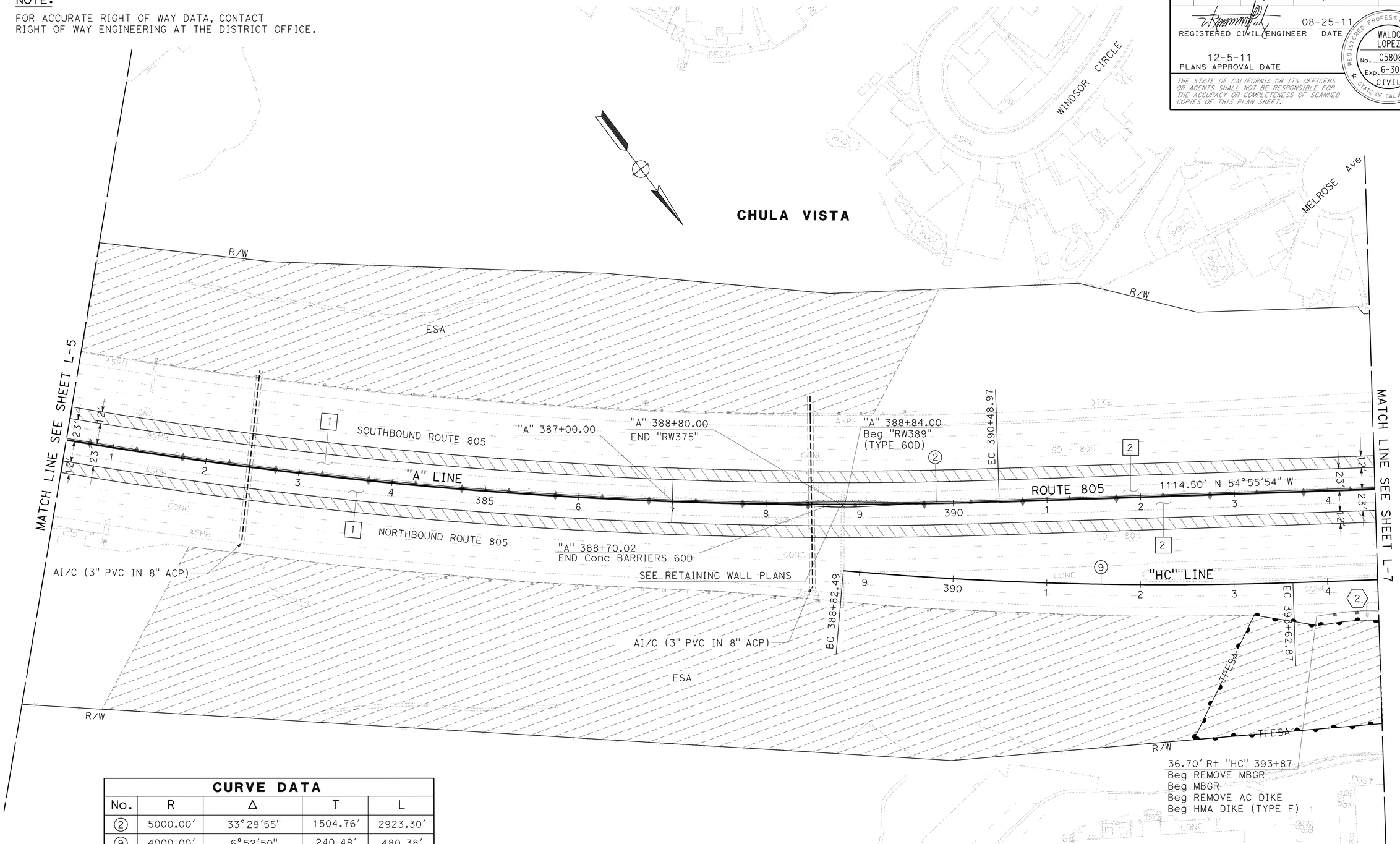

CURVE DATA

No.	R	Δ	T	L
2	5000.00'	33°29'55"	1504.76'	2923.30'
9	4000.00'	6°52'50"	240.48'	480.38'

LAYOUT

SCALE: 1" = 50' **L-6**

STATE OF CALIFORNIA - DEPARTMENT OF TRANSPORTATION
Caltrans PROJECT DEVELOPMENT

FUNCTIONAL SUPERVISOR: ROGER CARLIN

CALCULATED-DESIGNED BY: WALDO R. LOPEZ
CHECKED BY: WALDO R. LOPEZ
REVISED BY
DATE REVISED

LAST REVISION 08-25-11
DATE PLOTTED => 09-DEC-2011
TIME PLOTTED => 13:35

Dist	COUNTY	ROUTE	POST MILES TOTAL PROJECT	SHEET No.	TOTAL SHEETS
11	SD	54,805	1.8,5.5/9.4	13	635

REGISTERED CIVIL ENGINEER 08-25-11 DATE

12-5-11
PLANS APPROVAL DATE

REGISTERED PROFESSIONAL ENGINEER WALDO LOPEZ No. C58085 Exp. 6-30-12 CIVIL STATE OF CALIFORNIA

THE STATE OF CALIFORNIA OR ITS OFFICERS OR AGENTS SHALL NOT BE RESPONSIBLE FOR THE ACCURACY OR COMPLETENESS OF SCANNED COPIES OF THIS PLAN SHEET.

NOTE:

FOR ACCURATE RIGHT OF WAY DATA, CONTACT RIGHT OF WAY ENGINEERING AT THE DISTRICT OFFICE.

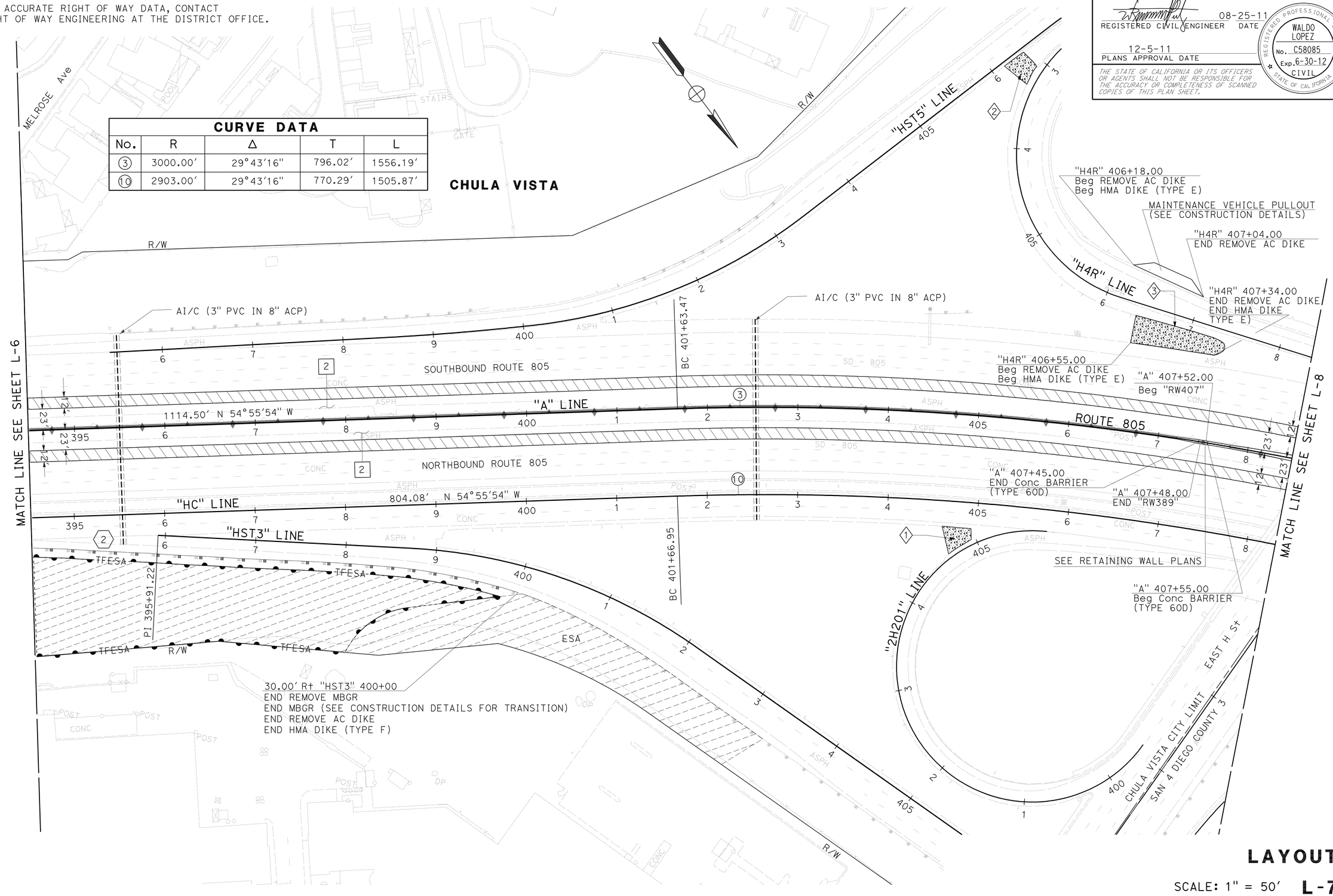

LAYOUT

SCALE: 1" = 50'

L-7

REVISED BY	DATE REVISED

CALCULATED-DESIGNED BY	CHECKED BY
WALDO R. LOPEZ	WALDO R. LOPEZ

FUNCTIONAL SUPERVISOR: ROGER CARLIN

STATE OF CALIFORNIA - DEPARTMENT OF TRANSPORTATION

Caltrans PROJECT DEVELOPMENT

LAST REVISION 08-25-11 | DATE PLOTTED => 09-DEC-2011 | TIME PLOTTED => 13:35

Dist	COUNTY	ROUTE	POST MILES TOTAL PROJECT	SHEET No.	TOTAL SHEETS
11	SD	54,805	1.8,5.5/9.4	14	635

REGISTERED CIVIL ENGINEER 08-25-11 DATE

12-5-11
PLANS APPROVAL DATE

REGISTERED PROFESSIONAL ENGINEER WALDO LOPEZ No. C58085 Exp. 6-30-12 CIVIL STATE OF CALIFORNIA

THE STATE OF CALIFORNIA OR ITS OFFICERS OR AGENTS SHALL NOT BE RESPONSIBLE FOR THE ACCURACY OR COMPLETENESS OF SCANNED COPIES OF THIS PLAN SHEET.

NOTE:

FOR ACCURATE RIGHT OF WAY DATA, CONTACT RIGHT OF WAY ENGINEERING AT THE DISTRICT OFFICE.

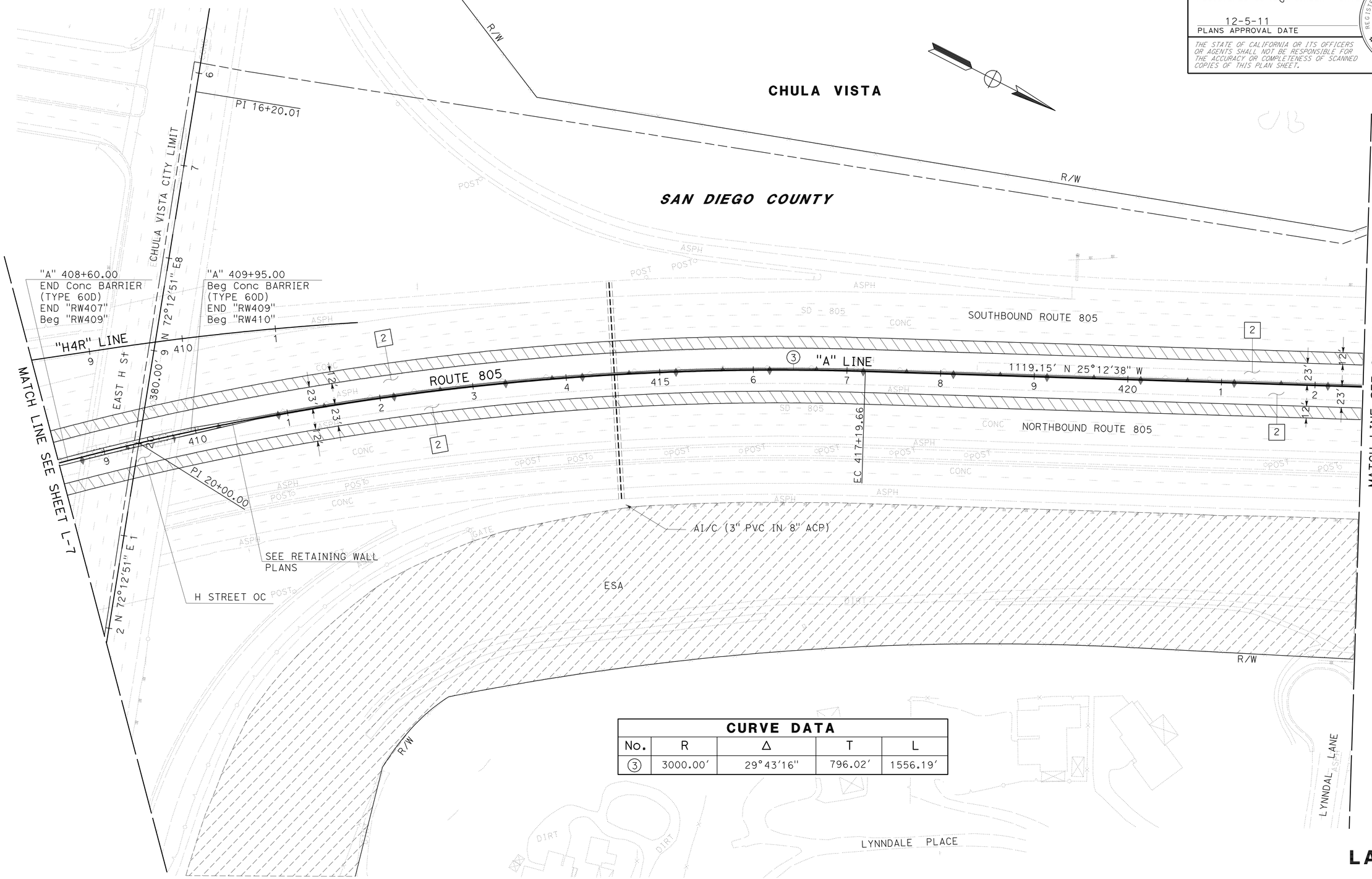

CURVE DATA

No.	R	Δ	T	L
3	3000.00′	29°43′16″	796.02′	1556.19′

LAYOUT

SCALE: 1" = 50′ **L-8**

STATE OF CALIFORNIA - DEPARTMENT OF TRANSPORTATION
Caltrans PROJECT DEVELOPMENT

FUNCTIONAL SUPERVISOR: ROGER CARLIN
CALCULATED-DESIGNED BY: WALDO R. LOPEZ
CHECKED BY: WALDO R. LOPEZ
REVISED BY
DATE REVISED

LAST REVISION 08-25-11
DATE PLOTTED => 09-DEC-2011
TIME PLOTTED => 13:35

Dist	COUNTY	ROUTE	POST MILES TOTAL PROJECT	SHEET No.	TOTAL SHEETS
11	SD	54,805	1.8,5.5/9.4	15	635

REGISTERED CIVIL ENGINEER 08-25-11 DATE

12-5-11
PLANS APPROVAL DATE

REGISTERED PROFESSIONAL ENGINEER WALDO LOPEZ No. C58085 Exp. 6-30-12 CIVIL STATE OF CALIFORNIA

THE STATE OF CALIFORNIA OR ITS OFFICERS OR AGENTS SHALL NOT BE RESPONSIBLE FOR THE ACCURACY OR COMPLETENESS OF SCANNED COPIES OF THIS PLAN SHEET.

NOTE:

FOR ACCURATE RIGHT OF WAY DATA, CONTACT RIGHT OF WAY ENGINEERING AT THE DISTRICT OFFICE.

CURVE DATA

No.	R	Δ	T	L
4	3000.00′	37°41′35″	1024.01′	1973.61′
11	3500.00′	12°24′09″	380.30′	757.64′

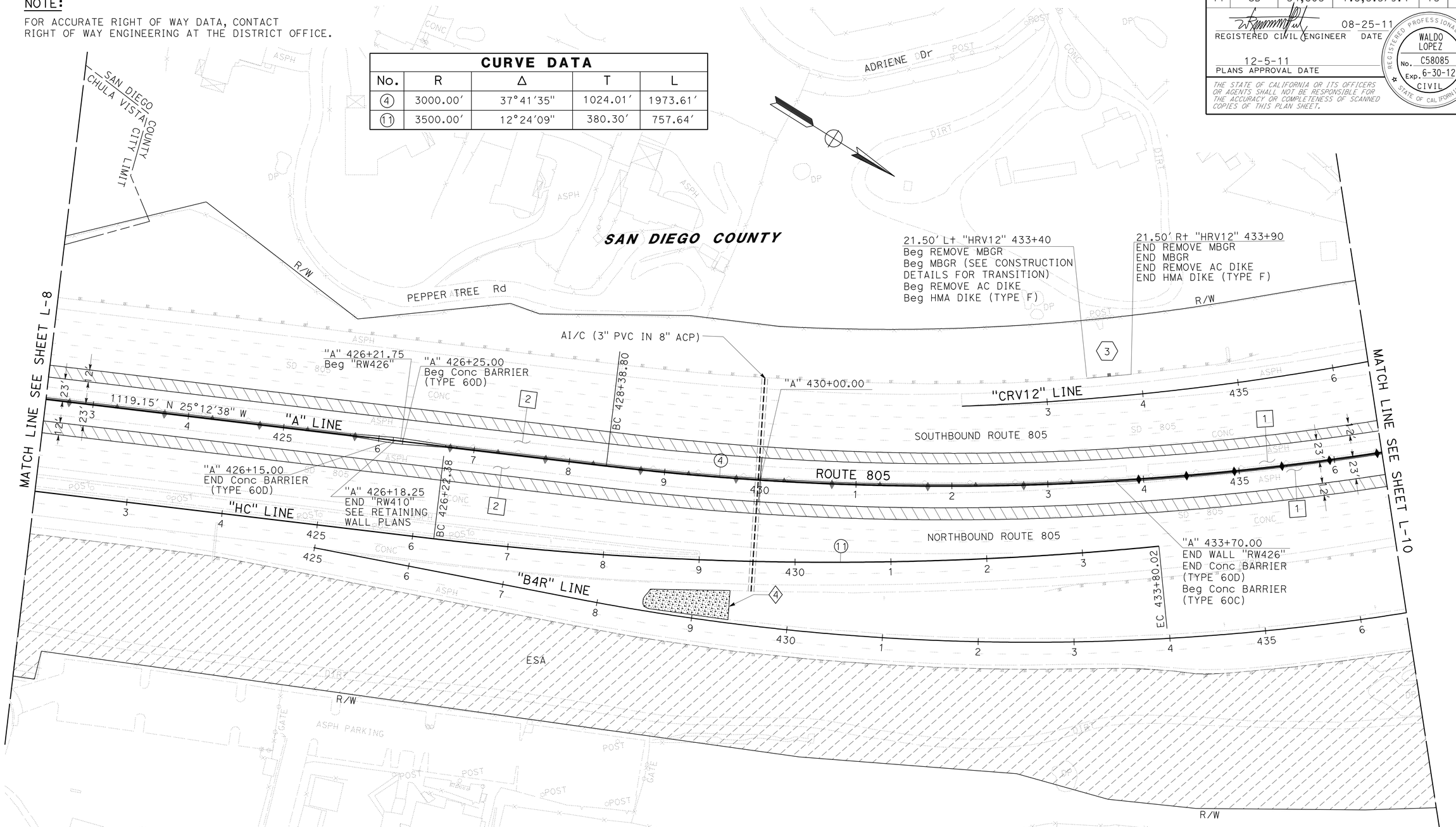

LAYOUT

SCALE: 1" = 50′ **L-9**

STATE OF CALIFORNIA - DEPARTMENT OF TRANSPORTATION
Caltrans PROJECT DEVELOPMENT

FUNCTIONAL SUPERVISOR: ROGER CARLIN
CALCULATED-DESIGNED BY: WALDO R. LOPEZ
CHECKED BY: WALDO R. LOPEZ
REVISED BY
DATE REVISED

LAST REVISION 08-25-11
DATE PLOTTED => 09-DEC-2011
TIME PLOTTED => 13:35

Dist	COUNTY	ROUTE	POST MILES TOTAL PROJECT	SHEET No.	TOTAL SHEETS
11	SD	54,805	1.8,5.5/9.4	16	635

REGISTERED CIVIL ENGINEER 08-25-11 DATE

12-5-11
PLANS APPROVAL DATE

REGISTERED PROFESSIONAL ENGINEER WALDO LOPEZ No. C58085 Exp. 6-30-12 CIVIL STATE OF CALIFORNIA

THE STATE OF CALIFORNIA OR ITS OFFICERS OR AGENTS SHALL NOT BE RESPONSIBLE FOR THE ACCURACY OR COMPLETENESS OF SCANNED COPIES OF THIS PLAN SHEET.

NOTE:

FOR ACCURATE RIGHT OF WAY DATA, CONTACT RIGHT OF WAY ENGINEERING AT THE DISTRICT OFFICE.

CURVE DATA

No.	R	Δ	T	L
4	3000.00′	37°41′35″	1024.01′	1973.61′
12	3000.94′	1°14′28″	32.50′	65.00′

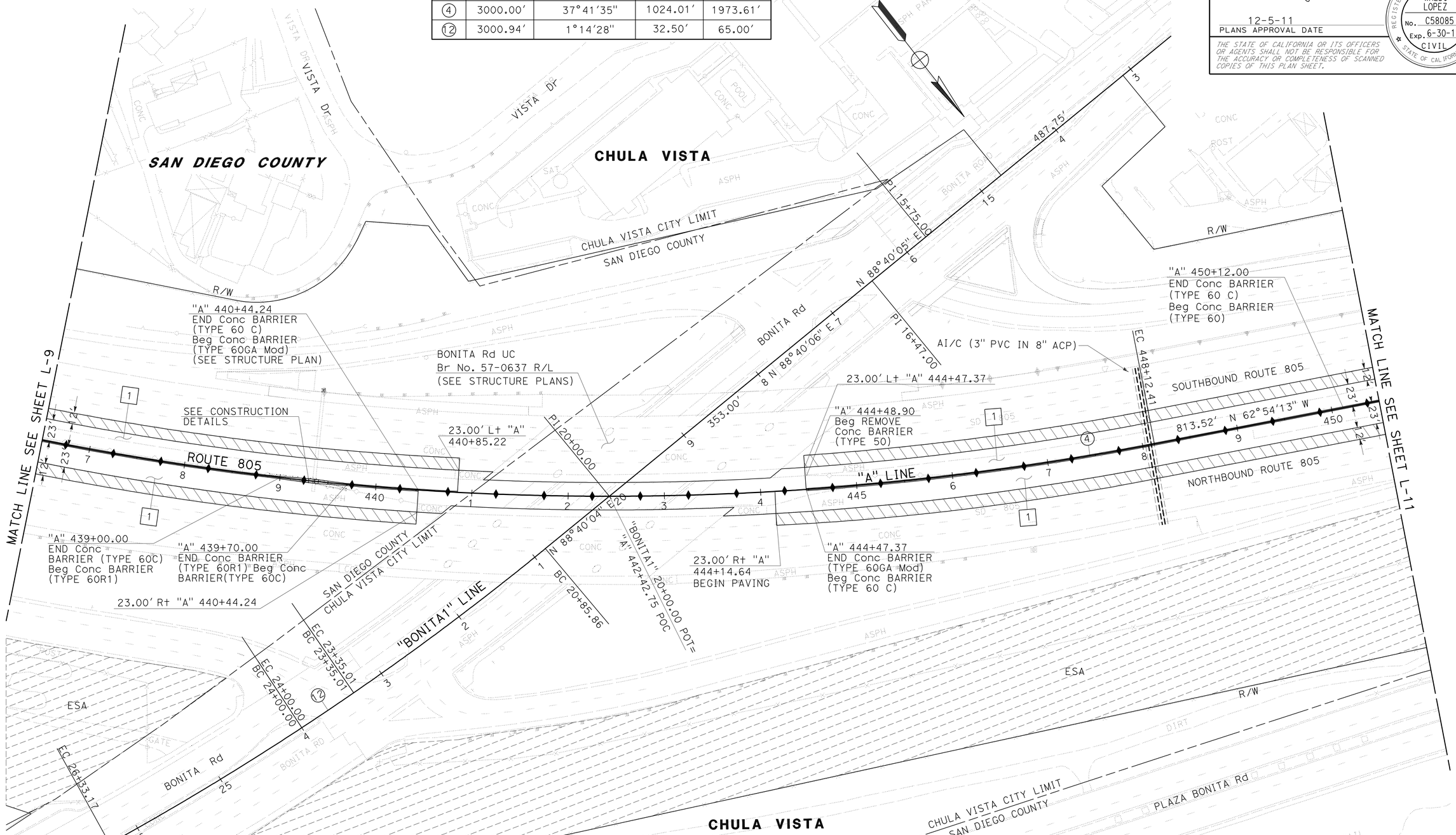

LAYOUT

SCALE: 1" = 50′ **L-10**

STATE OF CALIFORNIA - DEPARTMENT OF TRANSPORTATION
Caltrans PROJECT DEVELOPMENT

FUNCTIONAL SUPERVISOR: ROGER CARLIN
CALCULATED-DESIGNED BY: WALDO R. LOPEZ
CHECKED BY: WALDO R. LOPEZ
REVISED BY
DATE REVISED

LAST REVISION 10-18-11
DATE PLOTTED => 09-DEC-2011
TIME PLOTTED => 13:35

Dist	COUNTY	ROUTE	POST MILES TOTAL PROJECT	SHEET No.	TOTAL SHEETS
11	SD	54,805	1.8,5.5/9.4	17	635

REGISTERED CIVIL ENGINEER 08-25-11 DATE

12-5-11
PLANS APPROVAL DATE

REGISTERED PROFESSIONAL ENGINEER WALDO LOPEZ No. C58085 Exp. 6-30-12 CIVIL STATE OF CALIFORNIA

THE STATE OF CALIFORNIA OR ITS OFFICERS OR AGENTS SHALL NOT BE RESPONSIBLE FOR THE ACCURACY OR COMPLETENESS OF SCANNED COPIES OF THIS PLAN SHEET.

NOTE:

FOR ACCURATE RIGHT OF WAY DATA, CONTACT RIGHT OF WAY ENGINEERING AT THE DISTRICT OFFICE.

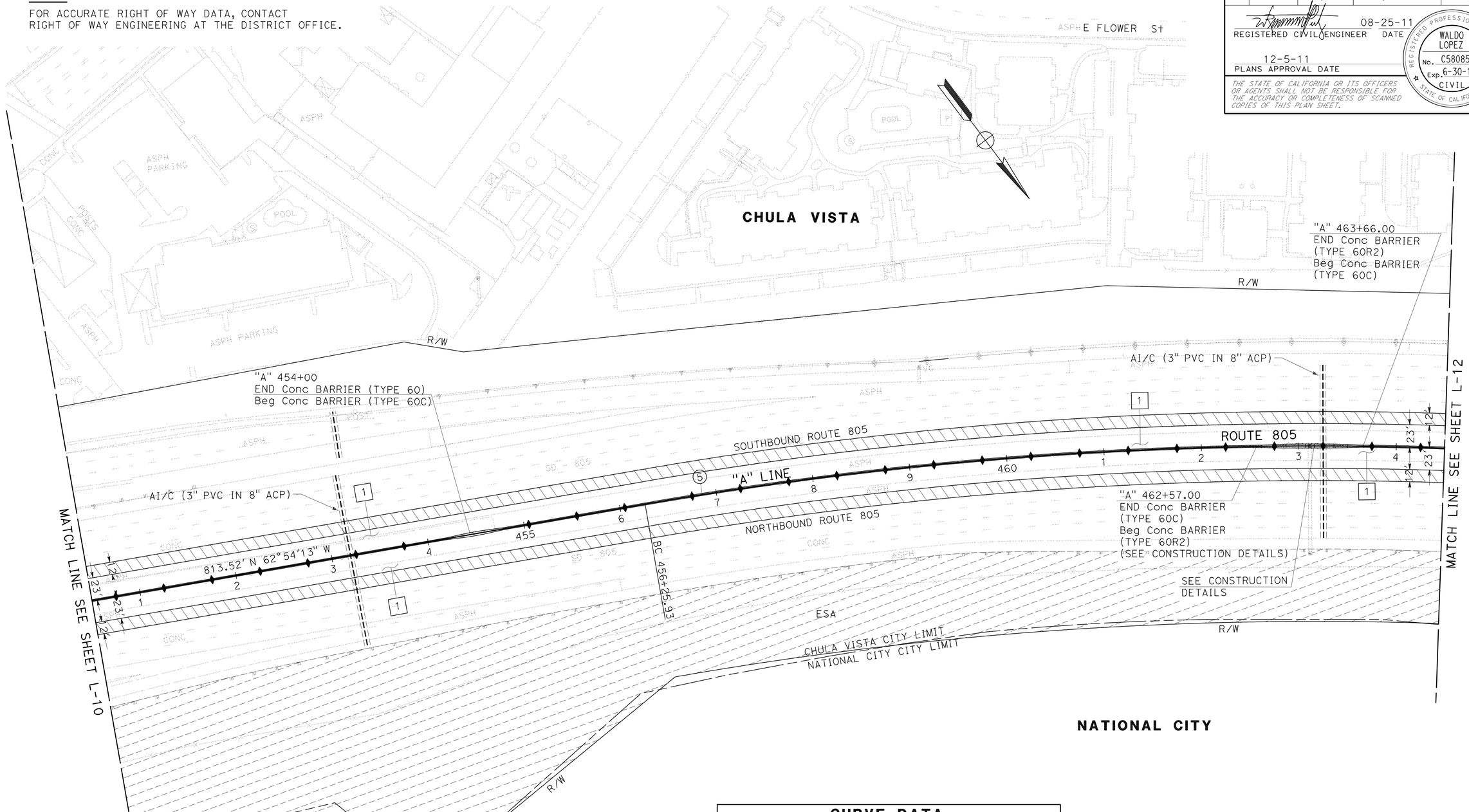

CURVE DATA				
No.	R	Δ	T	L
5	4000.00'	25°50'15"	917.50'	1803.80

LAYOUT

SCALE: 1" = 50' **L-11**

STATE OF CALIFORNIA - DEPARTMENT OF TRANSPORTATION
Caltrans PROJECT DEVELOPMENT

FUNCTIONAL SUPERVISOR: ROGER CARLIN

CALCULATED-DESIGNED BY: WALDO R. LOPEZ
CHECKED BY: WALDO R. LOPEZ
REVISED BY
DATE REVISED

LAST REVISION 08-25-11
DATE PLOTTED => 09-DEC-2011
TIME PLOTTED => 13:35

Dist	COUNTY	ROUTE	POST MILES TOTAL PROJECT	SHEET No.	TOTAL SHEETS
11	SD	54,805	1.8,5.5/9.4	18	635

REGISTERED CIVIL ENGINEER 08-25-11 DATE

12-5-11
PLANS APPROVAL DATE

REGISTERED PROFESSIONAL ENGINEER WALDO LOPEZ No. C58085 Exp. 6-30-12 CIVIL STATE OF CALIFORNIA

THE STATE OF CALIFORNIA OR ITS OFFICERS OR AGENTS SHALL NOT BE RESPONSIBLE FOR THE ACCURACY OR COMPLETENESS OF SCANNED COPIES OF THIS PLAN SHEET.

NOTE:

FOR ACCURATE RIGHT OF WAY DATA, CONTACT RIGHT OF WAY ENGINEERING AT THE DISTRICT OFFICE.

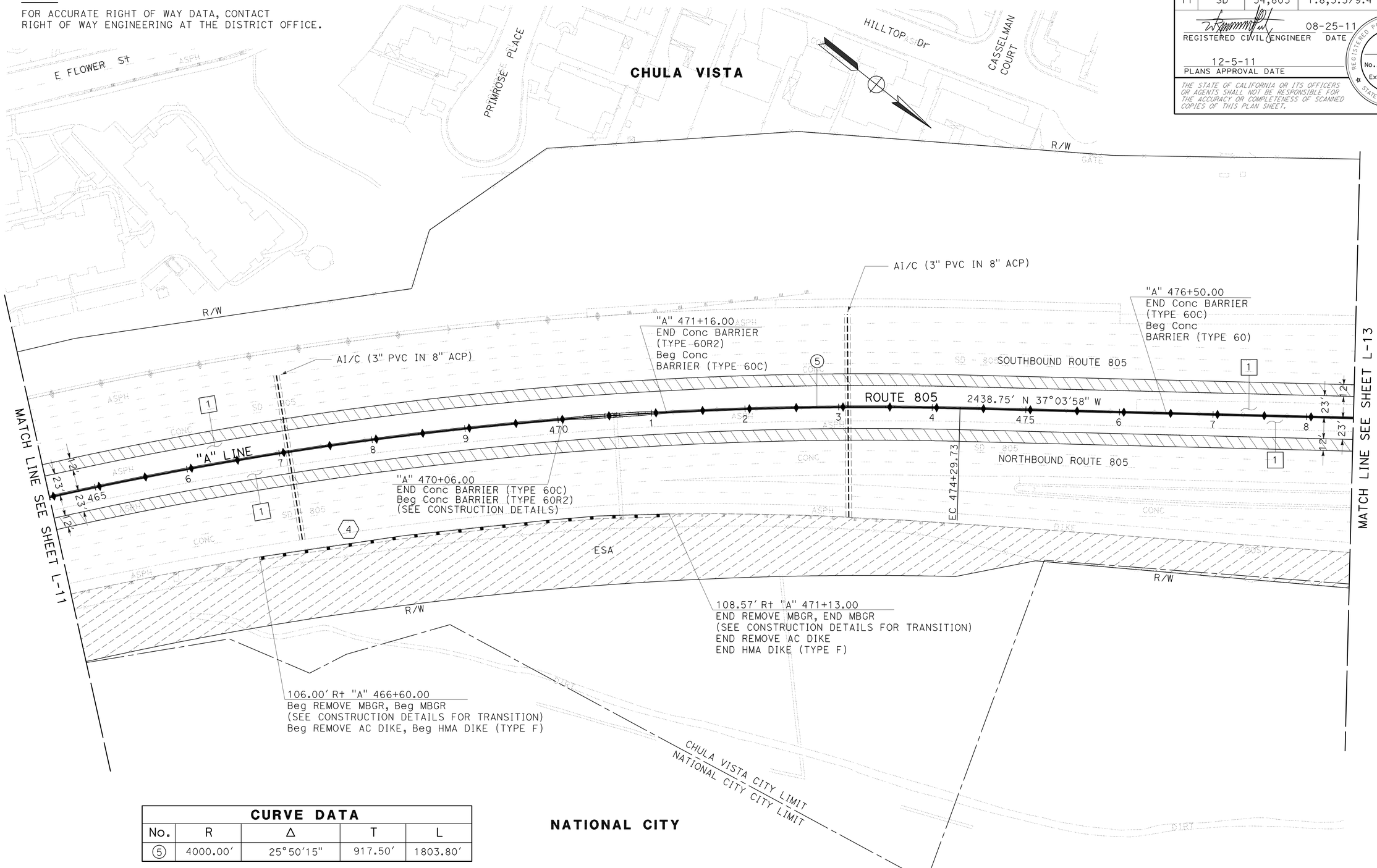

CURVE DATA				
No.	R	Δ	T	L
5	4000.00'	25°50'15"	917.50'	1803.80'

LAYOUT

SCALE: 1" = 50' **L-12**

STATE OF CALIFORNIA - DEPARTMENT OF TRANSPORTATION
Caltrans PROJECT DEVELOPMENT

FUNCTIONAL SUPERVISOR: ROGER CARLIN
CALCULATED-DESIGNED BY: WALDO R. LOPEZ
CHECKED BY: WALDO R. LOPEZ
REVISED BY
DATE REVISED

LAST REVISION 08-25-11
DATE PLOTTED => 12-DEC-2011
TIME PLOTTED => 08:31

Dist	COUNTY	ROUTE	POST MILES TOTAL PROJECT	SHEET No.	TOTAL SHEETS
11	SD	54,805	1.8,5.5/9.4	19	635

08-25-11
REGISTERED CIVIL ENGINEER DATE

12-5-11
PLANS APPROVAL DATE

REGISTERED PROFESSIONAL ENGINEER
WALDO LOPEZ
No. C58085
Exp. 6-30-12
CIVIL
STATE OF CALIFORNIA

THE STATE OF CALIFORNIA OR ITS OFFICERS OR AGENTS SHALL NOT BE RESPONSIBLE FOR THE ACCURACY OR COMPLETENESS OF SCANNED COPIES OF THIS PLAN SHEET.

NOTE:

FOR ACCURATE RIGHT OF WAY AND ACCESS DATA, CONTACT RIGHT OF WAY ENGINEERING AT THE DISTRICT OFFICE.

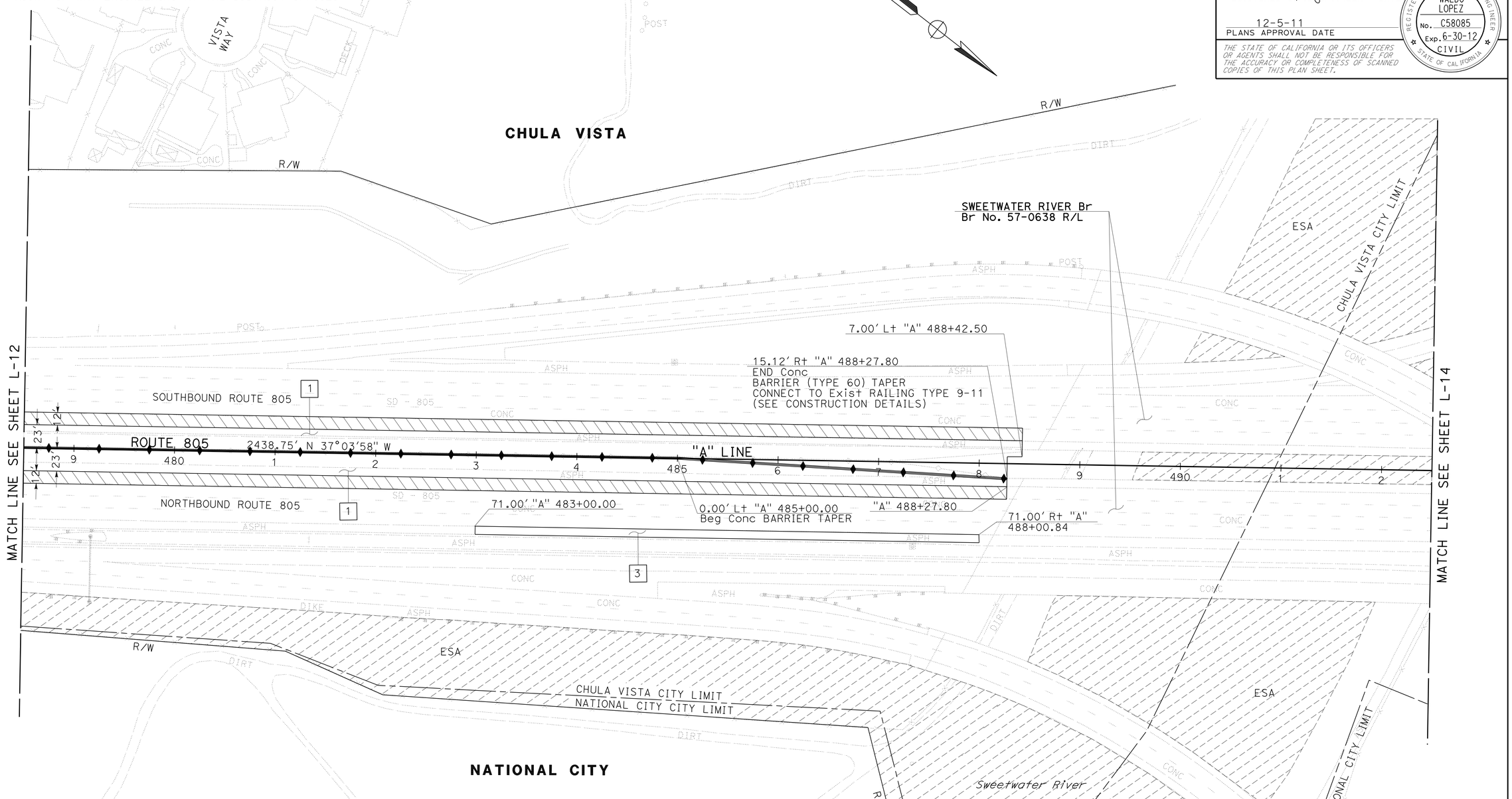

LAYOUT

SCALE: 1" = 50' **L-13**

STATE OF CALIFORNIA - DEPARTMENT OF TRANSPORTATION
Caltrans PROJECT DEVELOPMENT

FUNCTIONAL SUPERVISOR: ROGER CARLIN
CALCULATED-DESIGNED BY: WALDO R. LOPEZ
CHECKED BY: WALDO R. LOPEZ
REVISED BY
DATE REVISED

LAST REVISION 08-25-11
DATE PLOTTED => 09-DEC-2011
TIME PLOTTED => 13:36

Dist	COUNTY	ROUTE	POST MILES TOTAL PROJECT	SHEET No.	TOTAL SHEETS
11	SD	54,805	1.8,5.5/9.4	20	635

REGISTERED CIVIL ENGINEER 08-25-11 DATE

12-5-11
PLANS APPROVAL DATE

REGISTERED PROFESSIONAL ENGINEER WALDO LOPEZ No. C58085 Exp. 6-30-12 CIVIL STATE OF CALIFORNIA

THE STATE OF CALIFORNIA OR ITS OFFICERS OR AGENTS SHALL NOT BE RESPONSIBLE FOR THE ACCURACY OR COMPLETENESS OF SCANNED COPIES OF THIS PLAN SHEET.

NOTE:

FOR ACCURATE RIGHT OF WAY DATA, CONTACT RIGHT OF WAY ENGINEERING AT THE DISTRICT OFFICE.

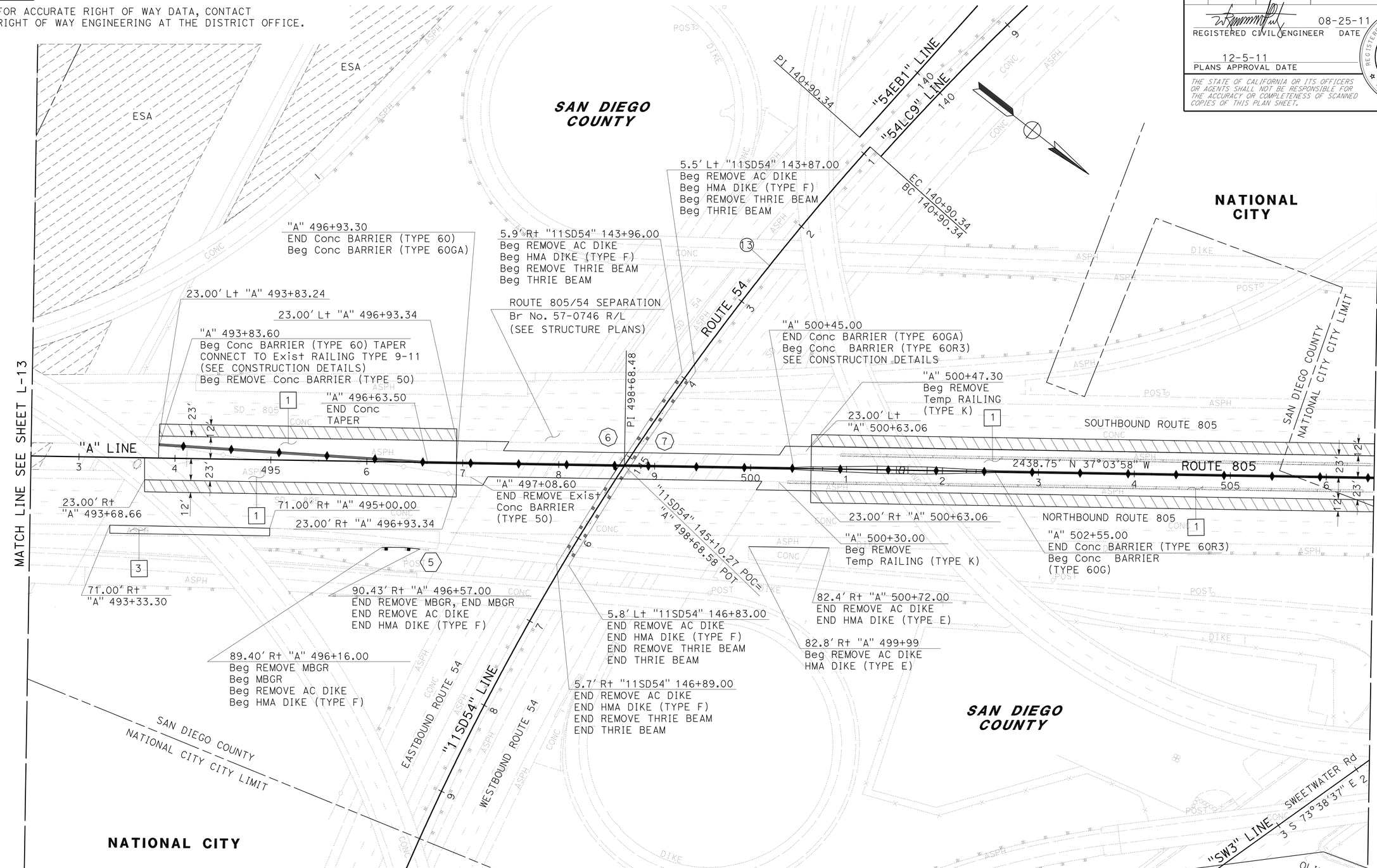

CURVE DATA

No.	R	Δ	T	L
13	2800.00'	36°51'45"	933.13'	1801.44'

LAYOUT

SCALE: 1" = 50' **L-14**

STATE OF CALIFORNIA - DEPARTMENT OF TRANSPORTATION
Caltrans PROJECT DEVELOPMENT

FUNCTIONAL SUPERVISOR: ROGER CARLIN
CALCULATED-DESIGNED BY: WALDO R. LOPEZ
CHECKED BY: WALDO R. LOPEZ
REVISED BY
DATE REVISED

LAST REVISION 08-25-11
DATE PLOTTED => 09-DEC-2011
TIME PLOTTED => 13:36

Dist	COUNTY	ROUTE	POST MILES TOTAL PROJECT	SHEET No.	TOTAL SHEETS
11	SD	54,805	1.8,5.5/9.4	21	635

REGISTERED CIVIL ENGINEER 08-25-11 DATE

12-5-11
PLANS APPROVAL DATE

REGISTERED PROFESSIONAL ENGINEER WALDO LOPEZ No. C58085 Exp. 6-30-12 CIVIL STATE OF CALIFORNIA

THE STATE OF CALIFORNIA OR ITS OFFICERS OR AGENTS SHALL NOT BE RESPONSIBLE FOR THE ACCURACY OR COMPLETENESS OF SCANNED COPIES OF THIS PLAN SHEET.

NOTE:

FOR ACCURATE RIGHT OF WAY DATA, CONTACT RIGHT OF WAY ENGINEERING AT THE DISTRICT OFFICE.

CURVE DATA

No.	R	Δ	T	L
6	4000.00′	19°28′05"	686.18′	1359.13′
12	5000.06′	4°5′09"	178.35′	356.56′

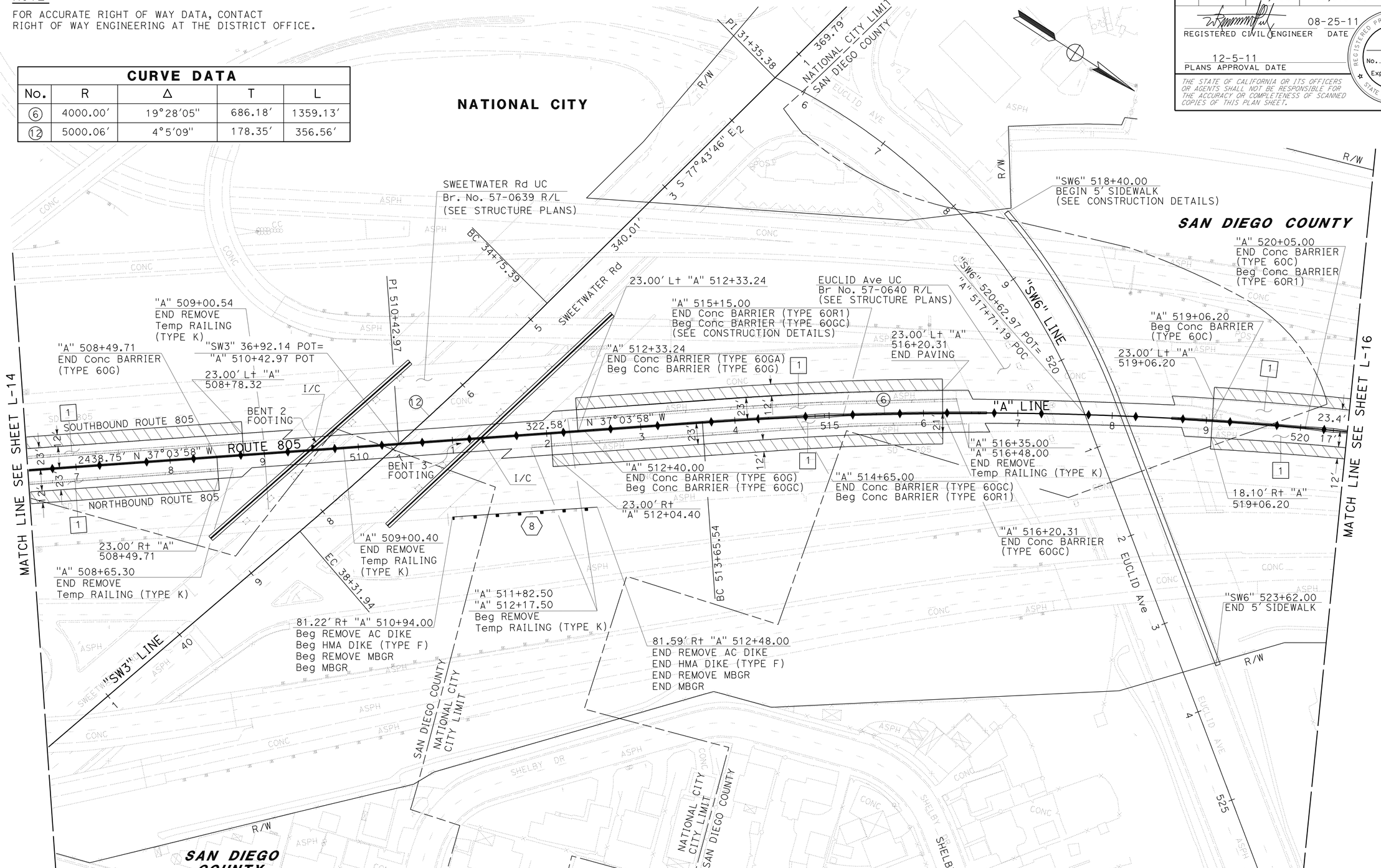

LAYOUT

SCALE: 1" = 50′ **L-15**

STATE OF CALIFORNIA - DEPARTMENT OF TRANSPORTATION
Caltrans PROJECT DEVELOPMENT

FUNCTIONAL SUPERVISOR: ROGER CARLIN
CALCULATED-DESIGNED BY: WALDO R. LOPEZ
CHECKED BY: WALDO R. LOPEZ
REVISED BY
DATE REVISED

LAST REVISION 10-19-11
DATE PLOTTED => 09-DEC-2011
TIME PLOTTED => 13:36

Dist	COUNTY	ROUTE	POST MILES TOTAL PROJECT	SHEET No.	TOTAL SHEETS
11	SD	54,805	1.8,5.5/9.4	22	635

REGISTERED CIVIL ENGINEER 08-25-11 DATE

12-5-11
PLANS APPROVAL DATE

REGISTERED PROFESSIONAL ENGINEER WALDO LOPEZ No. C58085 Exp. 6-30-12 CIVIL STATE OF CALIFORNIA

THE STATE OF CALIFORNIA OR ITS OFFICERS OR AGENTS SHALL NOT BE RESPONSIBLE FOR THE ACCURACY OR COMPLETENESS OF SCANNED COPIES OF THIS PLAN SHEET.

NOTE:

FOR ACCURATE RIGHT OF WAY DATA, CONTACT RIGHT OF WAY ENGINEERING AT THE DISTRICT OFFICE.

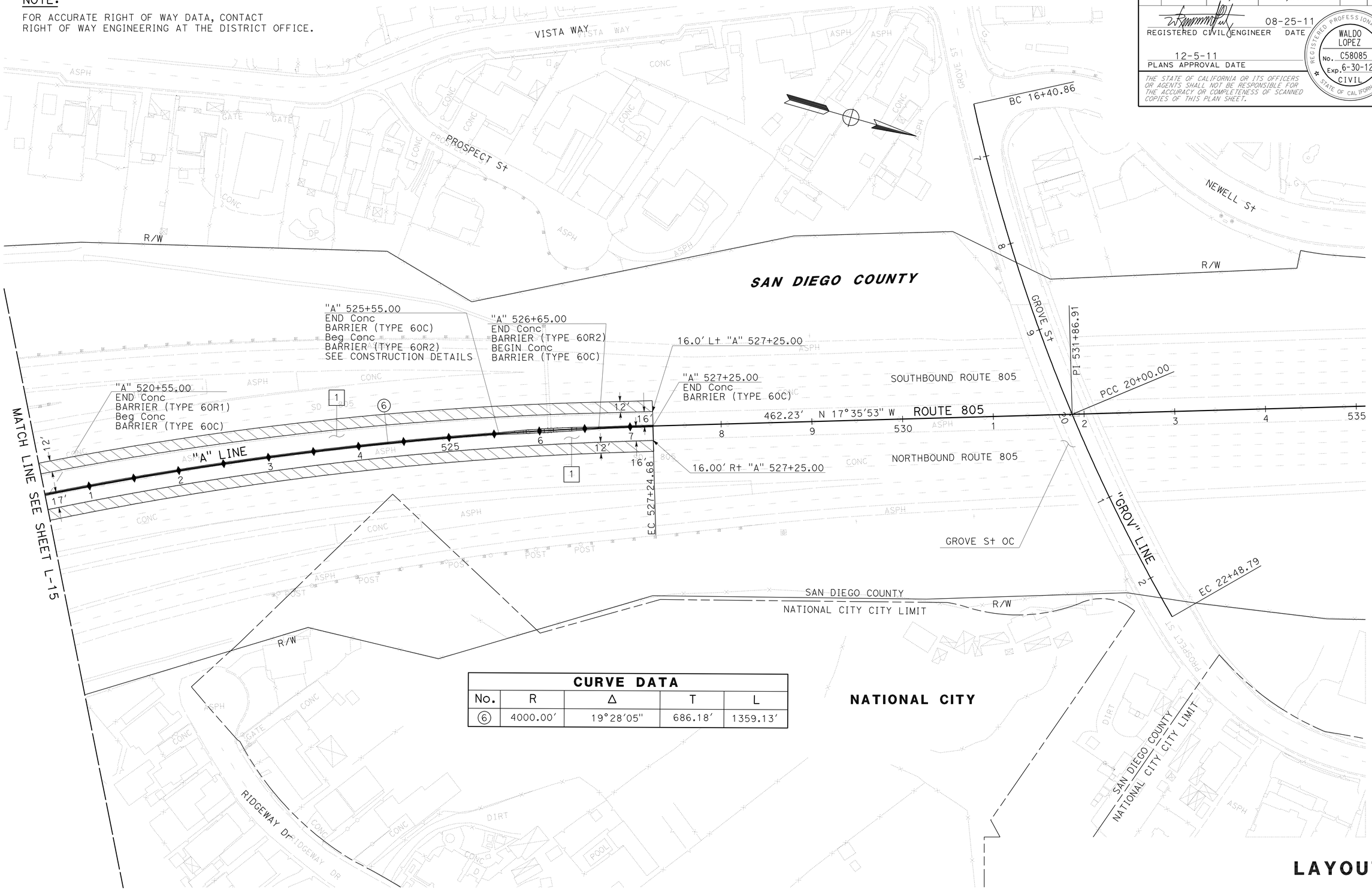

CURVE DATA

No.	R	Δ	T	L
6	4000.00'	19°28'05"	686.18'	1359.13'

LAYOUT

SCALE: 1" = 50' **L-16**

STATE OF CALIFORNIA - DEPARTMENT OF TRANSPORTATION
Caltrans PROJECT DEVELOPMENT

FUNCTIONAL SUPERVISOR: ROGER CARLIN

CALCULATED-DESIGNED BY: WALDO R. LOPEZ
CHECKED BY: WALDO R. LOPEZ
REVISED BY
DATE REVISED

LAST REVISION 08-25-11
DATE PLOTTED => 09-DEC-2011
TIME PLOTTED => 13:36

Dist	COUNTY	ROUTE	POST MILES TOTAL PROJECT	SHEET No.	TOTAL SHEETS
11	SD	54,805	1.8,5.5/9.4	23	635

REGISTERED CIVIL ENGINEER 08-25-11 DATE

12-5-11
PLANS APPROVAL DATE

REGISTERED PROFESSIONAL ENGINEER WALDO LOPEZ No. C58085 Exp. 6-30-12 CIVIL STATE OF CALIFORNIA

THE STATE OF CALIFORNIA OR ITS OFFICERS OR AGENTS SHALL NOT BE RESPONSIBLE FOR THE ACCURACY OR COMPLETENESS OF SCANNED COPIES OF THIS PLAN SHEET.

NOTE:

1. ELEVATIONS ARE BASED ON NGVD 88 DATUM

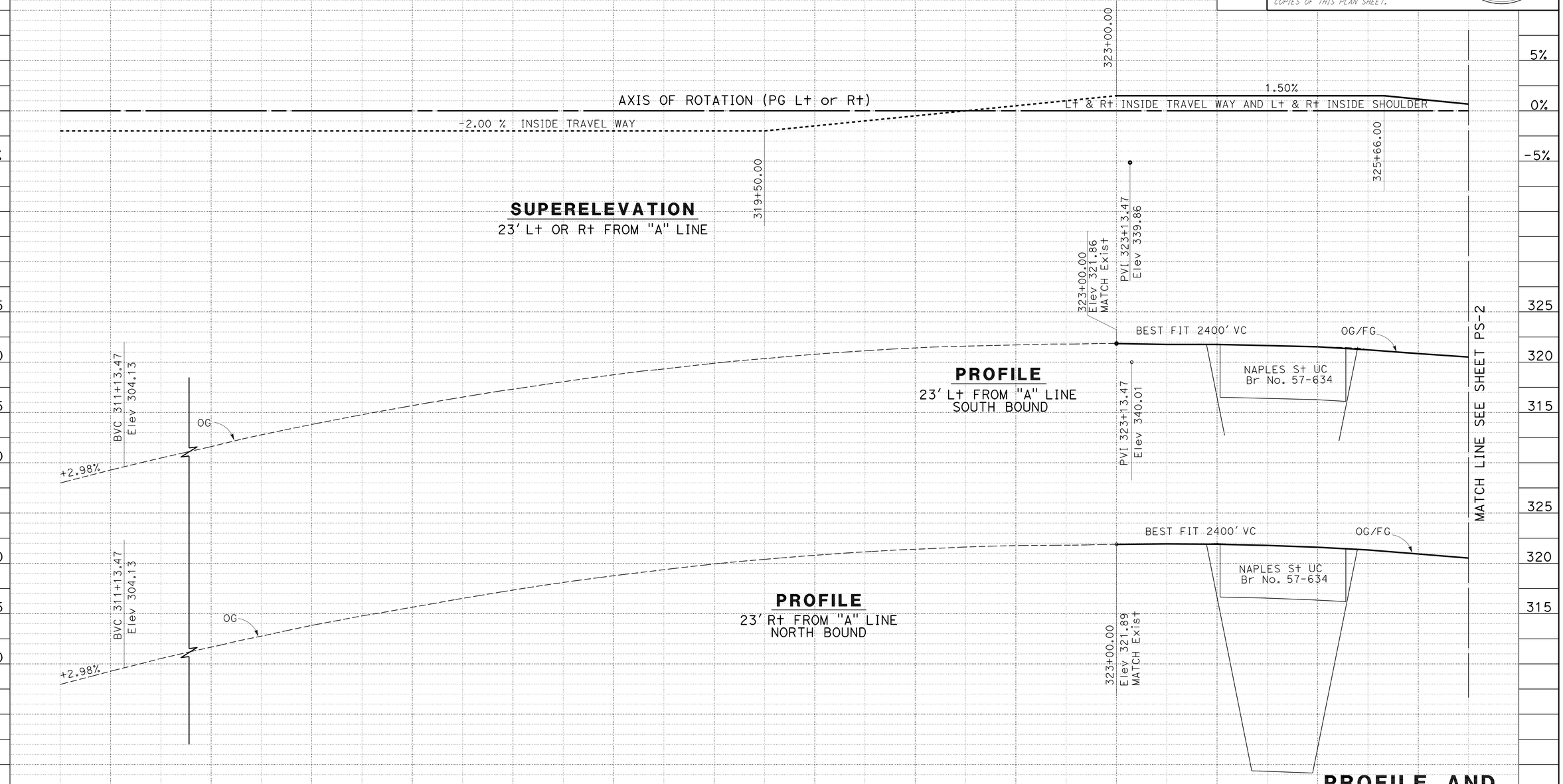

STATION		311	314	315	316	317	318	319	320	321	322	323	324	325	326	TOTAL
CY	Exc											357	0	253		610
	Emb											0	0	0		0

PROFILE AND SUPERELEVATION DIAGRAM

SCALE: Horiz 1" = 50'
Vert 1" = 5'

PS-1

REVISED BY	DATE REVISED
WALDO R. LOPEZ	WALDO R. LOPEZ

CALCULATED-DESIGNED BY: WALDO R. LOPEZ
CHECKED BY: WALDO R. LOPEZ

FUNCTIONAL SUPERVISOR: ROGER CARLIN

STATE OF CALIFORNIA - DEPARTMENT OF TRANSPORTATION
Caltrans PROJECT DEVELOPMENT

LAST REVISION 08-25-11
DATE PLOTTED => 09-DEC-2011
TIME PLOTTED => 13:36

Dist	COUNTY	ROUTE	POST MILES TOTAL PROJECT	SHEET No.	TOTAL SHEETS
11	SD	54,805	1.8,5.5/9.4	24	635

REGISTERED CIVIL ENGINEER 08-25-11 DATE

12-5-11
PLANS APPROVAL DATE

REGISTERED PROFESSIONAL ENGINEER WALDO LOPEZ No. C58085 Exp. 6-30-12 CIVIL STATE OF CALIFORNIA

THE STATE OF CALIFORNIA OR ITS OFFICERS OR AGENTS SHALL NOT BE RESPONSIBLE FOR THE ACCURACY OR COMPLETENESS OF SCANNED COPIES OF THIS PLAN SHEET.

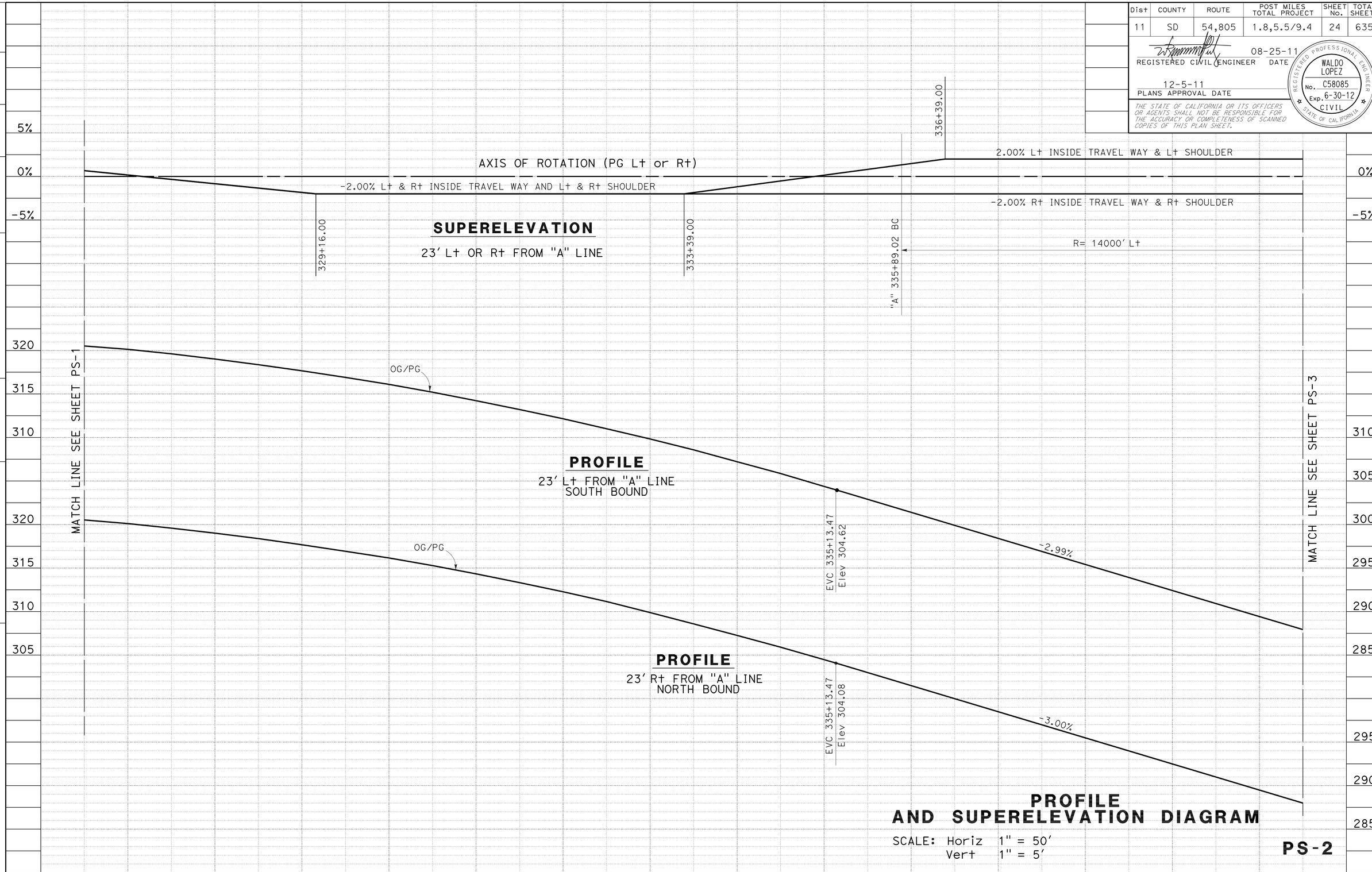

STATE OF CALIFORNIA - DEPARTMENT OF TRANSPORTATION
Caltrans PROJECT DEVELOPMENT

FUNCTIONAL SUPERVISOR: ROGER CARLIN

CALCULATED-DESIGNED BY: WALDO R. LOPEZ
CHECKED BY: WALDO R. LOPEZ

REVISED BY
DATE REVISED

LAST REVISION 08-25-11
DATE PLOTTED => 09-DEC-2011
TIME PLOTTED => 13:36

Dist	COUNTY	ROUTE	POST MILES TOTAL PROJECT	SHEET No.	TOTAL SHEETS
11	SD	54,805	1.8,5.5/9.4	25	635

REGISTERED CIVIL ENGINEER DATE 08-25-11

12-5-11
PLANS APPROVAL DATE

REGISTERED PROFESSIONAL ENGINEER WALDO LOPEZ No. C58085 Exp. 6-30-12 CIVIL STATE OF CALIFORNIA

THE STATE OF CALIFORNIA OR ITS OFFICERS OR AGENTS SHALL NOT BE RESPONSIBLE FOR THE ACCURACY OR COMPLETENESS OF SCANNED COPIES OF THIS PLAN SHEET.

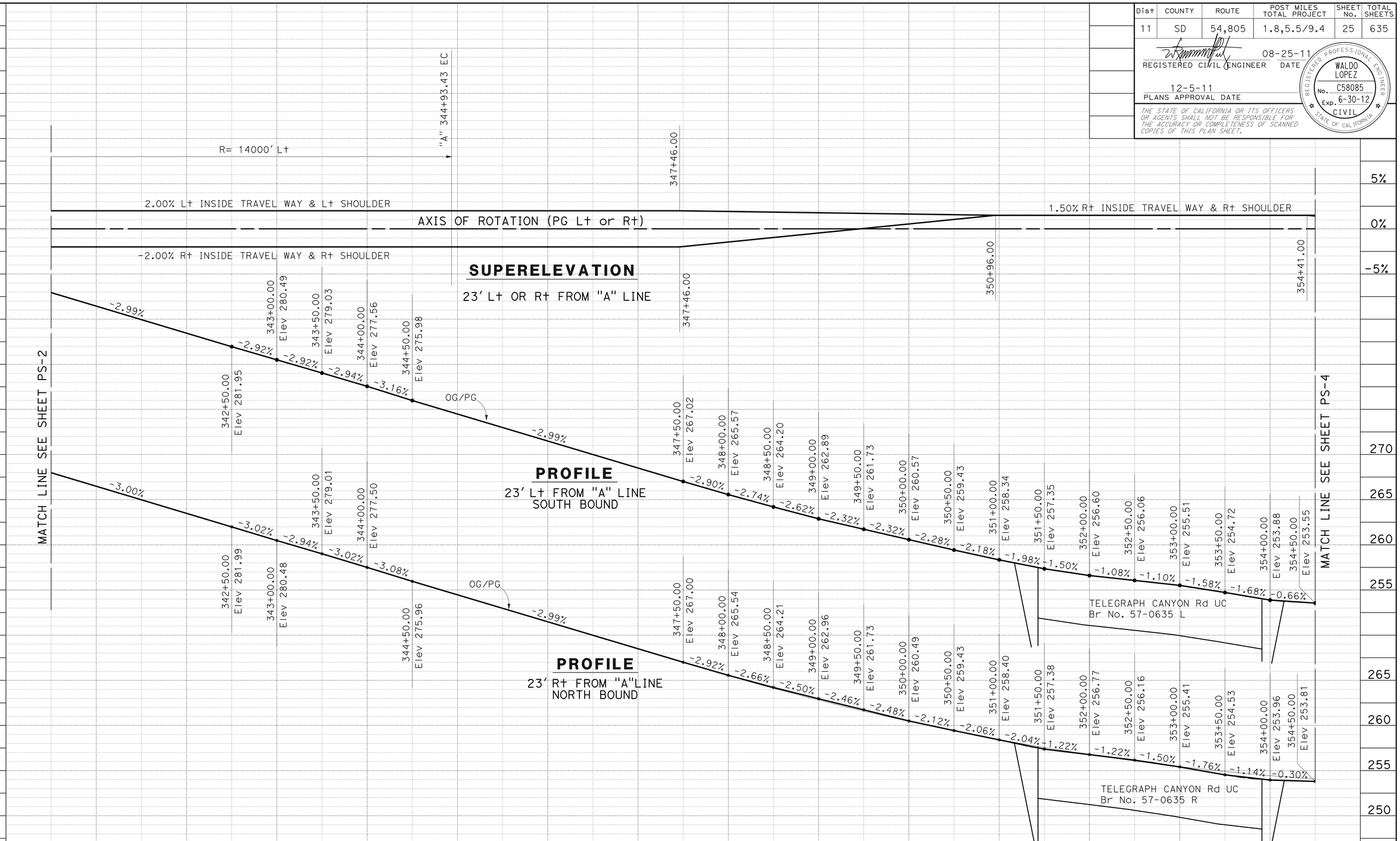

PROFILE AND SUPERELEVATION DIAGRAM PS-3

STATION	341	342	343	344	345	346	347	348	349	350	351	352	353	354	TOTAL
CY Exc	2,280										0				2,280
CY Emb	0										0				0

STATE OF CALIFORNIA - DEPARTMENT OF TRANSPORTATION
Caltrans PROJECT DEVELOPMENT

FUNCTIONAL SUPERVISOR: ROGER CARLIN
CALCULATED-DESIGNED BY: WALDO R. LOPEZ
CHECKED BY: WALDO R. LOPEZ
REVISED BY
DATE REVISED

LAST REVISION 08-25-11
DATE PLOTTED => 09-DEC-2011
TIME PLOTTED => 13:36

Dist	COUNTY	ROUTE	POST MILES TOTAL PROJECT	SHEET No.	TOTAL SHEETS
11	SD	54,805	1.8,5.5/9.4	26	635

REGISTERED CIVIL ENGINEER 08-25-11 DATE

12-5-11
PLANS APPROVAL DATE

REGISTERED PROFESSIONAL ENGINEER WALDO LOPEZ No. C58085 Exp. 6-30-12 CIVIL STATE OF CALIFORNIA

THE STATE OF CALIFORNIA OR ITS OFFICERS OR AGENTS SHALL NOT BE RESPONSIBLE FOR THE ACCURACY OR COMPLETENESS OF SCANNED COPIES OF THIS PLAN SHEET.

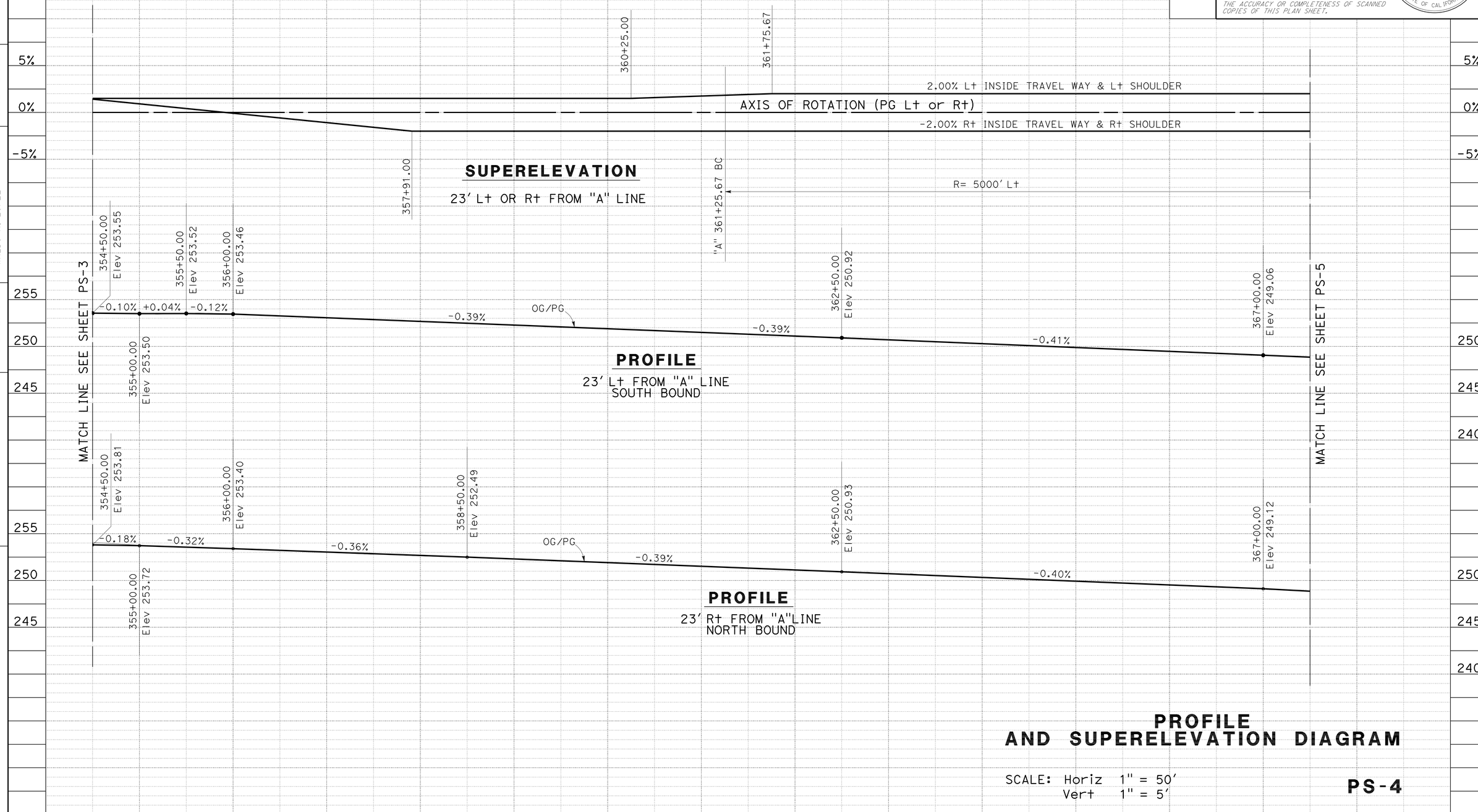

PROFILE AND SUPERELEVATION DIAGRAM

SCALE: Horiz 1" = 50'
Vert 1" = 5'

PS-4

STATION	355	356	357	358	359	360	361	362	363	364	365	366	367	368	TOTAL
CY Exc							3,733								3,733
CY Emb							0								0

REVISED BY | DATE REVISED
WALDO R. LOPEZ | WALDO R. LOPEZ
CALCULATED-DESIGNED BY | CHECKED BY
FUNCTIONAL SUPERVISOR: ROGER CARLIN

STATE OF CALIFORNIA - DEPARTMENT OF TRANSPORTATION
Caltrans PROJECT DEVELOPMENT

LAST REVISION 08-25-11
DATE PLOTTED => 09-DEC-2011
TIME PLOTTED => 13:36

Dist	COUNTY	ROUTE	POST MILES TOTAL PROJECT	SHEET No.	TOTAL SHEETS
11	SD	54,805	1.8,5.5/9.4	27	635

REGISTERED CIVIL ENGINEER 08-25-11 DATE

12-5-11
PLANS APPROVAL DATE

REGISTERED PROFESSIONAL ENGINEER WALDO LOPEZ No. C58085 Exp. 6-30-12 CIVIL STATE OF CALIFORNIA

THE STATE OF CALIFORNIA OR ITS OFFICERS OR AGENTS SHALL NOT BE RESPONSIBLE FOR THE ACCURACY OR COMPLETENESS OF SCANNED COPIES OF THIS PLAN SHEET.

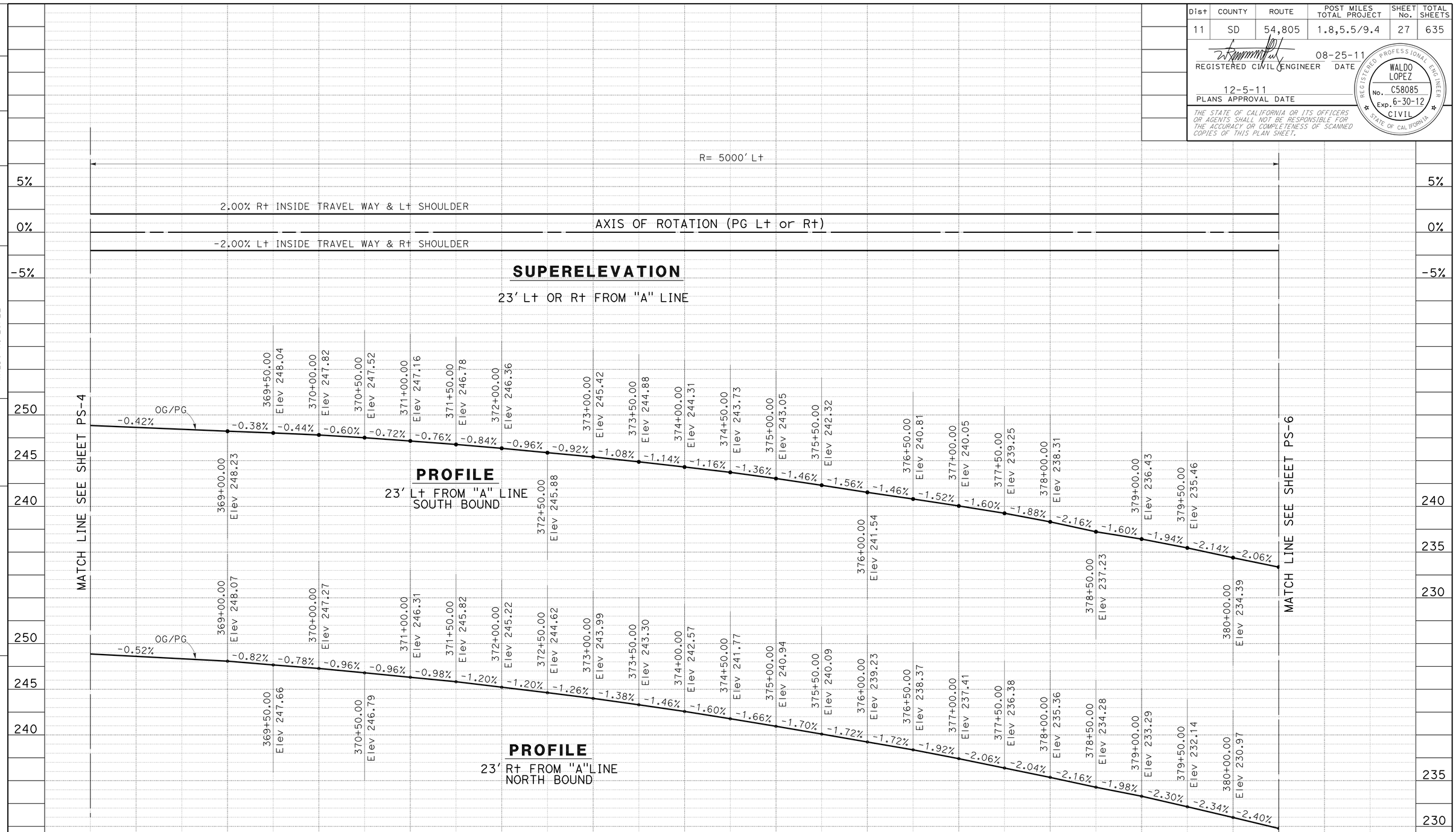

SCALE: Horiz 1" = 50'
Vert 1" = 5'

PROFILE AND SUPERELEVATION DIAGRAM PS-5

REVISED BY	DATE REVISED
WALDO R. LOPEZ	WALDO R. LOPEZ

CALCULATED-DESIGNED BY: WALDO R. LOPEZ
CHECKED BY: WALDO R. LOPEZ
FUNCTIONAL SUPERVISOR: ROGER CARLIN

STATE OF CALIFORNIA - DEPARTMENT OF TRANSPORTATION
Caltrans PROJECT DEVELOPMENT

LAST REVISION 08-25-11
DATE PLOTTED => 09-DEC-2011
TIME PLOTTED => 13:36

Dist	COUNTY	ROUTE	POST MILES TOTAL PROJECT	SHEET No.	TOTAL SHEETS
11	SD	54,805	1.8,5.5/9.4	28	635

REGISTERED CIVIL ENGINEER 08-25-11 DATE

12-5-11
PLANS APPROVAL DATE

REGISTERED PROFESSIONAL ENGINEER WALDO LOPEZ No. C58085 Exp. 6-30-12 CIVIL STATE OF CALIFORNIA

THE STATE OF CALIFORNIA OR ITS OFFICERS OR AGENTS SHALL NOT BE RESPONSIBLE FOR THE ACCURACY OR COMPLETENESS OF SCANNED COPIES OF THIS PLAN SHEET.

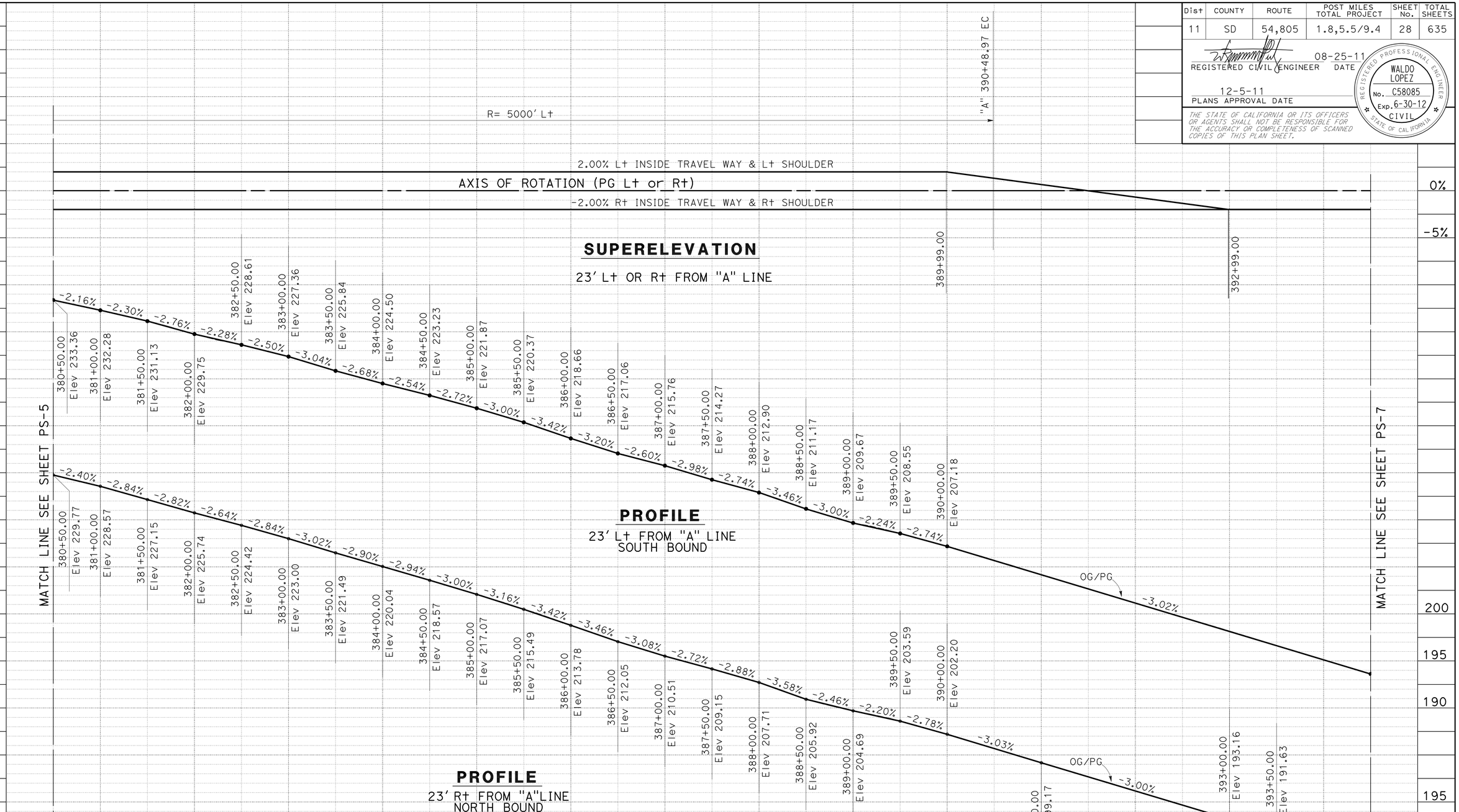

PROFILE AND SUPERELEVATION DIAGRAM

SCALE: Horiz 1" = 50'
Vert 1" = 5'

PS-6

STATION	381	382	383	384	385	386	387	388	389	390	391	392	393	394	TOTAL
CY Exc							5,803								5,803
CY Emb							5								5

STATE OF CALIFORNIA - DEPARTMENT OF TRANSPORTATION
Caltrans PROJECT DEVELOPMENT

FUNCTIONAL SUPERVISOR: ROGER CARLIN
CALCULATED-DESIGNED BY: WALDO R. LOPEZ
CHECKED BY: WALDO R. LOPEZ
REVISED BY
DATE REVISED

LAST REVISION 08-25-11
DATE PLOTTED => 09-DEC-2011
TIME PLOTTED => 13:36

Dist	COUNTY	ROUTE	POST MILES TOTAL PROJECT	SHEET No.	TOTAL SHEETS
11	SD	54,805	1.8,5.5/9.4	29	635

REGISTERED CIVIL ENGINEER 08-25-11 DATE

12-5-11
PLANS APPROVAL DATE

REGISTERED PROFESSIONAL ENGINEER WALDO LOPEZ No. C58085 Exp. 6-30-12 CIVIL STATE OF CALIFORNIA

THE STATE OF CALIFORNIA OR ITS OFFICERS OR AGENTS SHALL NOT BE RESPONSIBLE FOR THE ACCURACY OR COMPLETENESS OF SCANNED COPIES OF THIS PLAN SHEET.

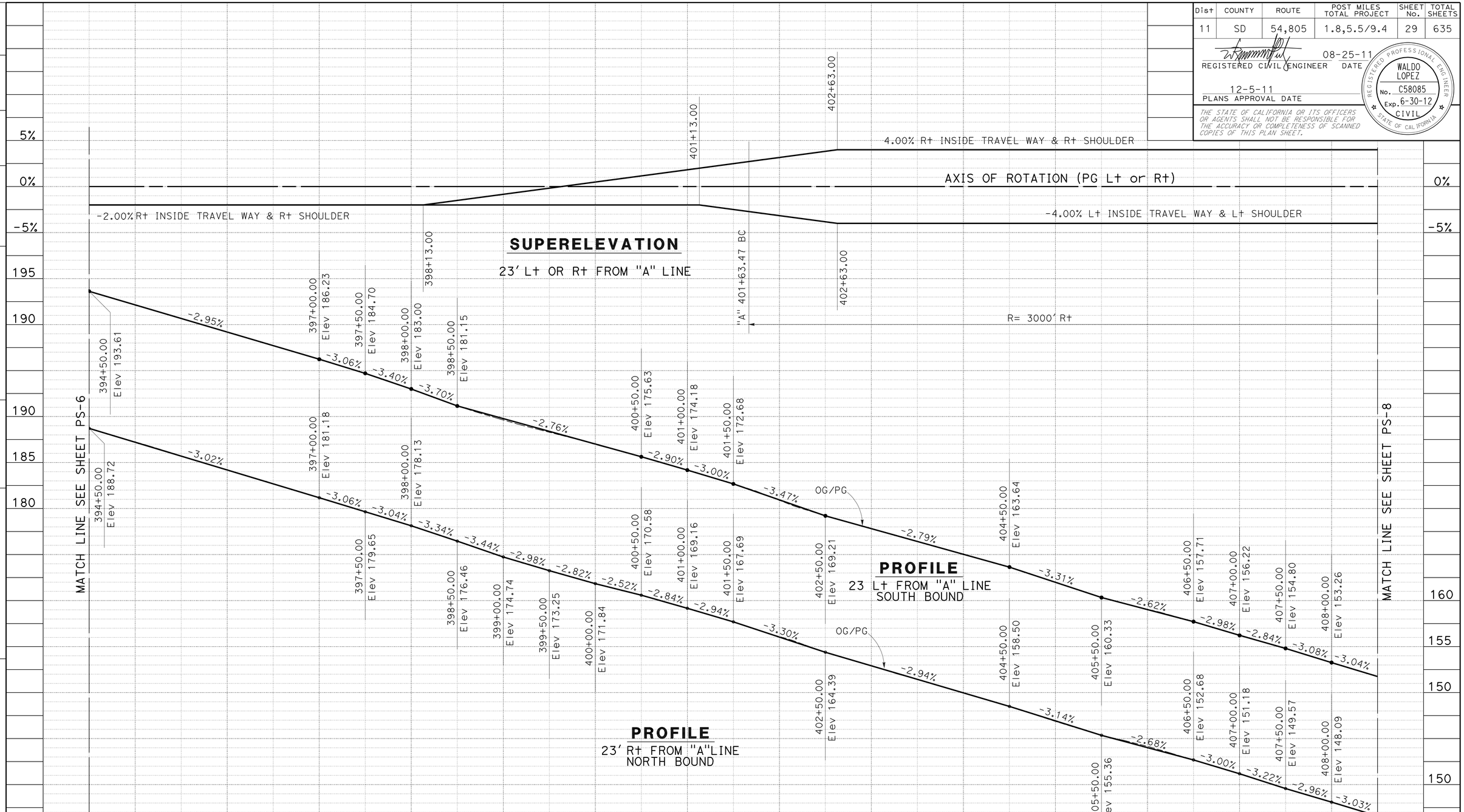

PROFILE AND SUPERELEVATION DIAGRAM

SCALE: Horiz 1" = 50'
Vert 1" = 5'

PS-7

REVISED BY	DATE REVISED

CALCULATED-DESIGNED BY	CHECKED BY
WALDO R. LOPEZ	WALDO R. LOPEZ

FUNCTIONAL SUPERVISOR: ROGER CARLIN

STATE OF CALIFORNIA - DEPARTMENT OF TRANSPORTATION
Caltrans PROJECT DEVELOPMENT

LAST REVISION 08-25-11
DATE PLOTTED => 09-DEC-2011
TIME PLOTTED => 13:37

Dist	COUNTY	ROUTE	POST MILES TOTAL PROJECT	SHEET No.	TOTAL SHEETS
11	SD	54,805	1.8,5.5/9.4	30	635

REGISTERED CIVIL ENGINEER 08-25-11 DATE

12-5-11
PLANS APPROVAL DATE

REGISTERED PROFESSIONAL ENGINEER WALDO LOPEZ No. C58085 Exp. 6-30-12 CIVIL STATE OF CALIFORNIA

THE STATE OF CALIFORNIA OR ITS OFFICERS OR AGENTS SHALL NOT BE RESPONSIBLE FOR THE ACCURACY OR COMPLETENESS OF SCANNED COPIES OF THIS PLAN SHEET.

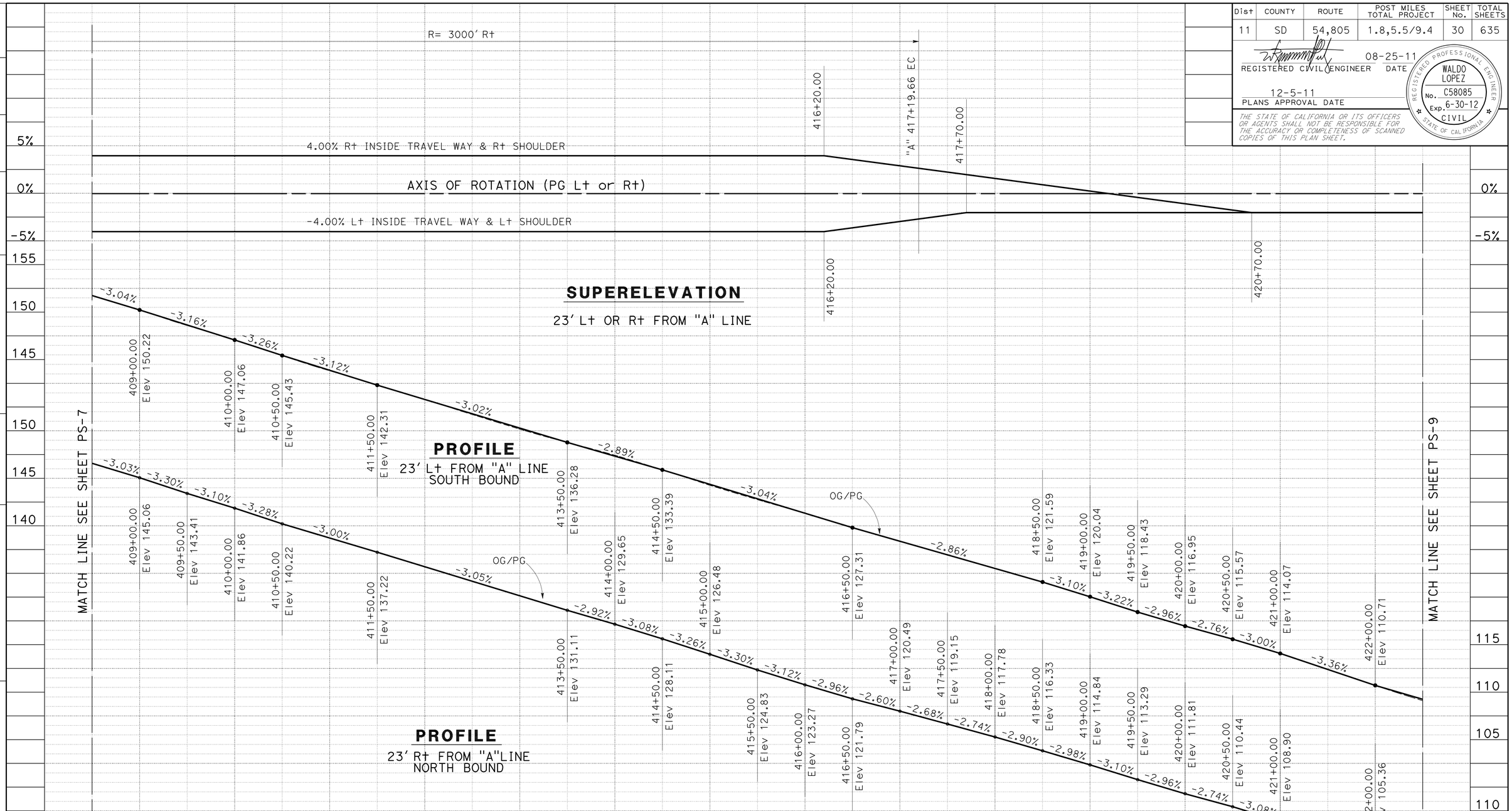

PROFILE AND SUPERELEVATION DIAGRAM

SCALE: Horiz 1" = 50'
Vert 1" = 5'

PS-8

STATION	409	410	411	412	413	414	415	416	417	418	419	420	421	422	TOTAL
CY Exc	6,444														6,444
CY Emb	3														3

STATE OF CALIFORNIA - DEPARTMENT OF TRANSPORTATION
Caltrans PROJECT DEVELOPMENT

FUNCTIONAL SUPERVISOR: ROGER CARLIN
CALCULATED-DESIGNED BY: WALDO R. LOPEZ
CHECKED BY: WALDO R. LOPEZ
REVISED BY / DATE REVISED

LAST REVISION 08-25-11
DATE PLOTTED => 09-DEC-2011
TIME PLOTTED => 13:37

Dist	COUNTY	ROUTE	POST MILES TOTAL PROJECT	SHEET No.	TOTAL SHEETS
11	SD	54,805	1.8,5.5/9.4	31	635

REGISTERED CIVIL ENGINEER 08-25-11 DATE

12-5-11
PLANS APPROVAL DATE

REGISTERED PROFESSIONAL ENGINEER WALDO LOPEZ No. C58085 Exp. 6-30-12 CIVIL STATE OF CALIFORNIA

THE STATE OF CALIFORNIA OR ITS OFFICERS OR AGENTS SHALL NOT BE RESPONSIBLE FOR THE ACCURACY OR COMPLETENESS OF SCANNED COPIES OF THIS PLAN SHEET.

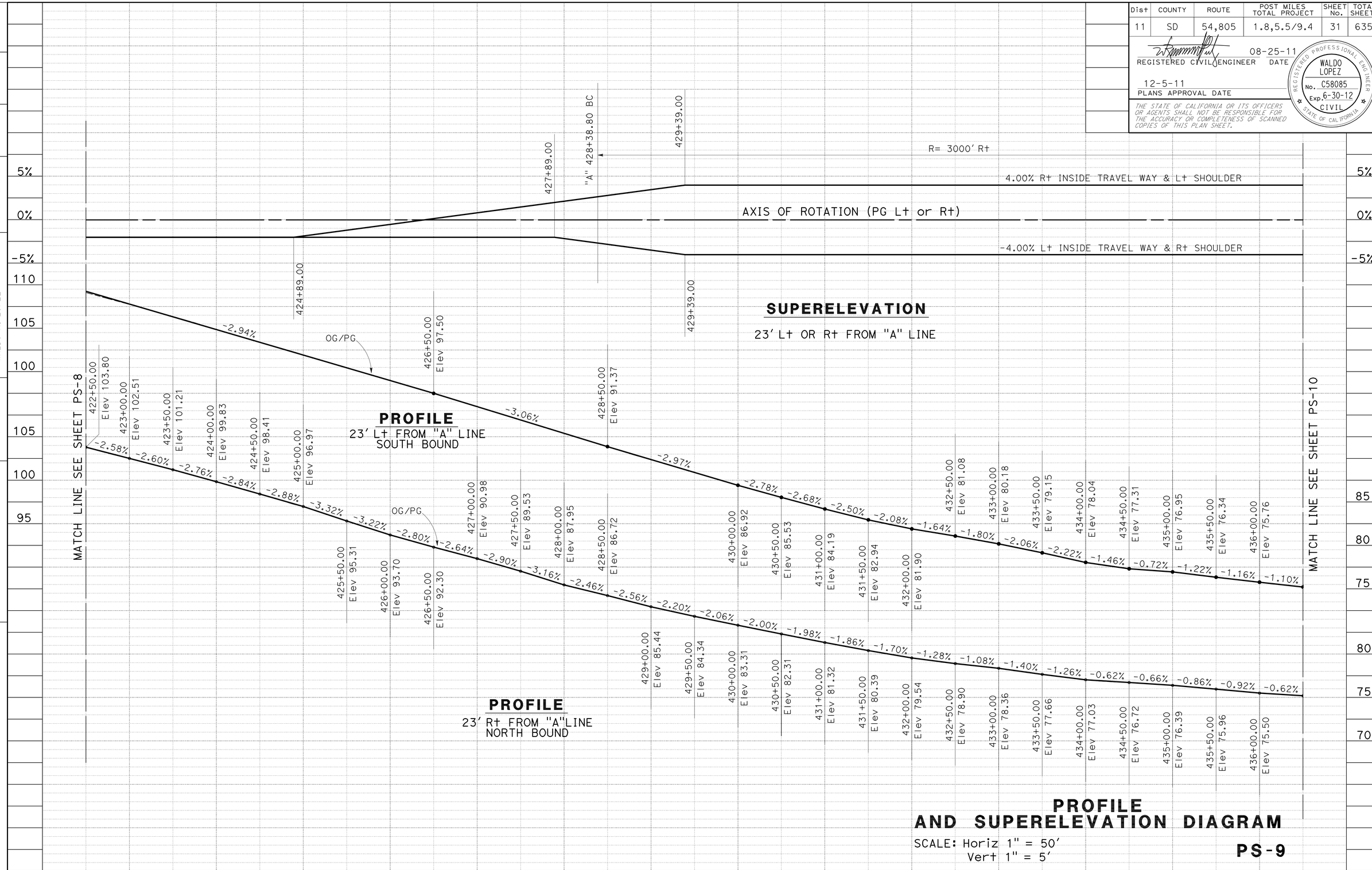

PROFILE AND SUPERELEVATION DIAGRAM

SCALE: Horiz 1" = 50'
Vert 1" = 5'

PS-9

STATE OF CALIFORNIA - DEPARTMENT OF TRANSPORTATION
Caltrans PROJECT DEVELOPMENT

FUNCTIONAL SUPERVISOR: ROGER CARLIN
CALCULATED-DESIGNED BY: WALDO R. LOPEZ
CHECKED BY: WALDO R. LOPEZ
REVISED BY
DATE REVISED

LAST REVISION 08-25-11
DATE PLOTTED => 09-DEC-2011
TIME PLOTTED => 10:11

Dist	COUNTY	ROUTE	POST MILES TOTAL PROJECT	SHEET No.	TOTAL SHEETS
11	SD	54,805	1.8,5.5/9.4	32	635

REGISTERED CIVIL ENGINEER 08-25-11 DATE

12-5-11
PLANS APPROVAL DATE

REGISTERED PROFESSIONAL ENGINEER WALDO LOPEZ No. C58085 Exp. 6-30-12 CIVIL STATE OF CALIFORNIA

THE STATE OF CALIFORNIA OR ITS OFFICERS OR AGENTS SHALL NOT BE RESPONSIBLE FOR THE ACCURACY OR COMPLETENESS OF SCANNED COPIES OF THIS PLAN SHEET.

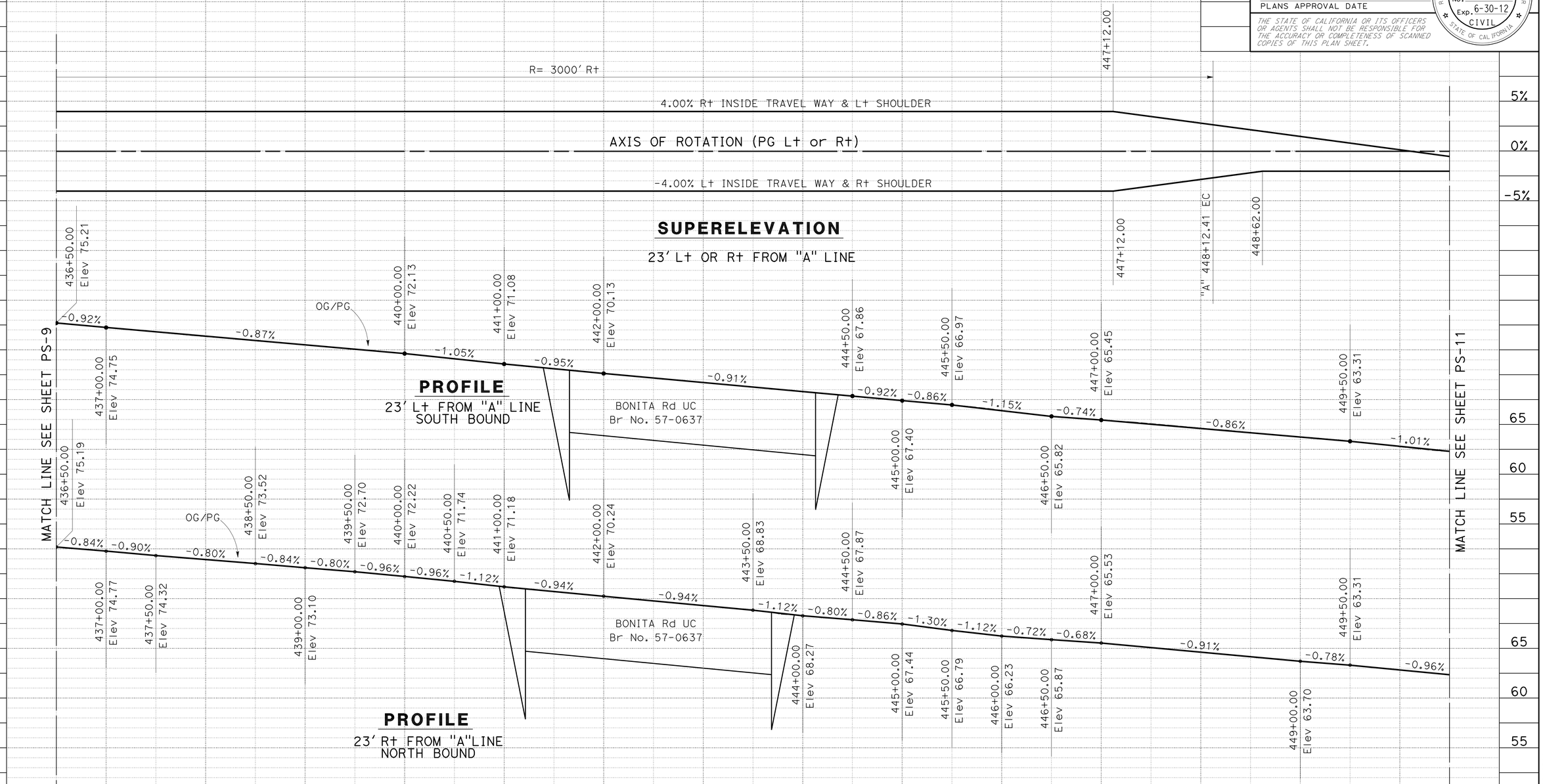

STATION	437	438	439	440	441	442	443	444	445	446	447	448	449	450	TOTAL
CY Exc	1,053					0				1,598					2,651
CY Emb	0					0				0					0

PROFILE AND SUPERELEVATION DIAGRAM

SCALE: Horiz 1" = 50'
Vert 1" = 5'

PS-10

STATE OF CALIFORNIA - DEPARTMENT OF TRANSPORTATION
Caltrans PROJECT DEVELOPMENT

FUNCTIONAL SUPERVISOR: ROGER CARLIN
CALCULATED-DESIGNED BY: WALDO R. LOPEZ
CHECKED BY: WALDO R. LOPEZ
REVISED BY
DATE REVISED

LAST REVISION 08-25-11
DATE PLOTTED => 09-DEC-2011
TIME PLOTTED => 10:11

Dist	COUNTY	ROUTE	POST MILES TOTAL PROJECT	SHEET No.	TOTAL SHEETS
11	SD	54,805	1.8,5.5/9.4	33	635

REGISTERED CIVIL ENGINEER 08-25-11 DATE

12-5-11
PLANS APPROVAL DATE

REGISTERED PROFESSIONAL ENGINEER WALDO LOPEZ No. C58085 Exp. 6-30-12 CIVIL STATE OF CALIFORNIA

THE STATE OF CALIFORNIA OR ITS OFFICERS OR AGENTS SHALL NOT BE RESPONSIBLE FOR THE ACCURACY OR COMPLETENESS OF SCANNED COPIES OF THIS PLAN SHEET.

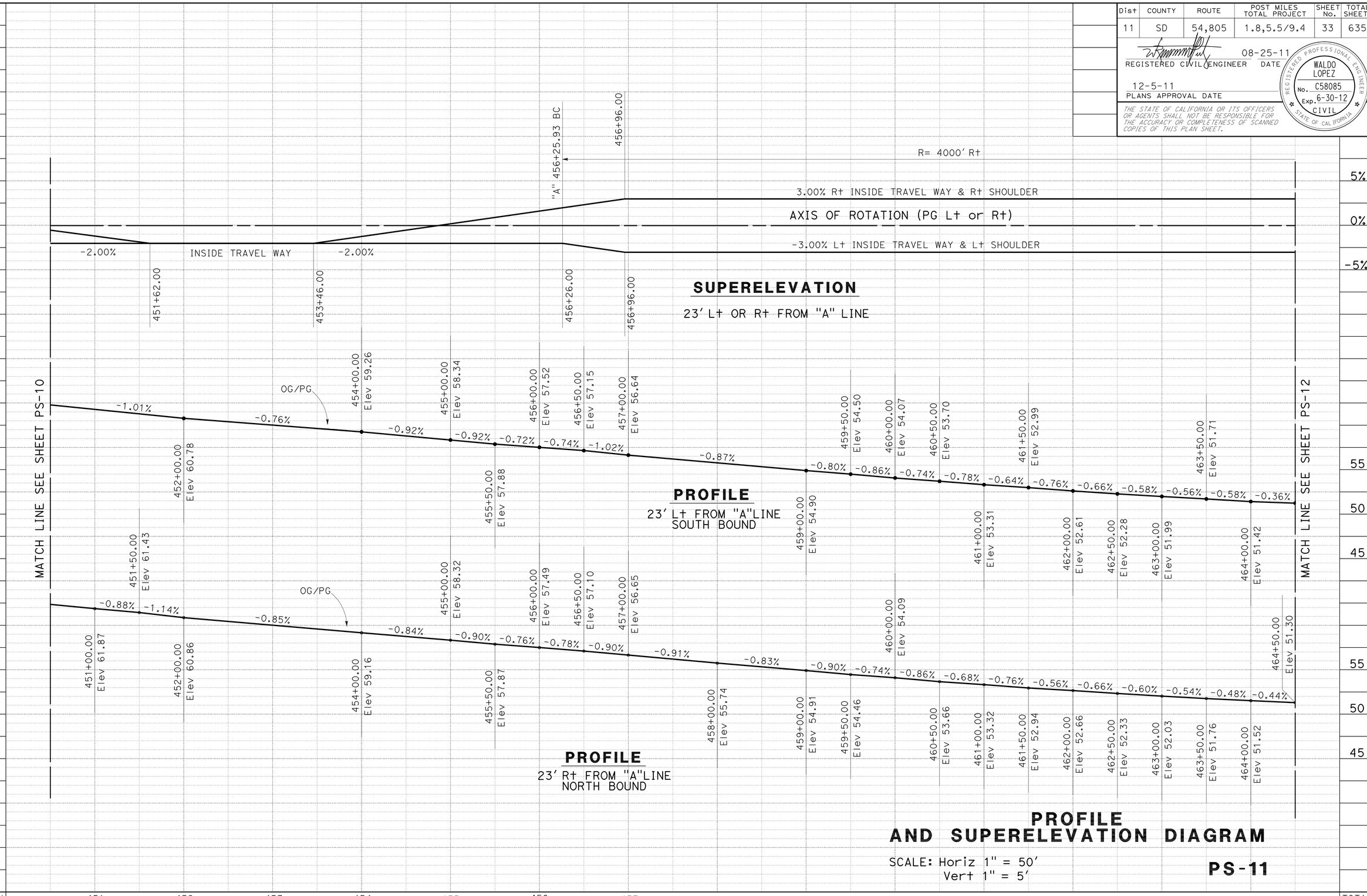

PROFILE AND SUPERELEVATION DIAGRAM

SCALE: Horiz 1" = 50'
Vert 1" = 5'

PS-11

REVISED BY	DATE REVISED

CALCULATED-DESIGNED BY: WALDO R. LOPEZ
CHECKED BY: WALDO R. LOPEZ
FUNCTIONAL SUPERVISOR: ROGER CARLIN

STATE OF CALIFORNIA - DEPARTMENT OF TRANSPORTATION
Caltrans PROJECT DEVELOPMENT

LAST REVISION 08-25-11
DATE PLOTTED => 09-DEC-2011
TIME PLOTTED => 10:11

Dist	COUNTY	ROUTE	POST MILES TOTAL PROJECT	SHEET No.	TOTAL SHEETS
11	SD	54,805	1.8,5.5/9.4	34	635

REGISTERED CIVIL ENGINEER 08-25-11 DATE

12-5-11
PLANS APPROVAL DATE

REGISTERED PROFESSIONAL ENGINEER WALDO LOPEZ No. C58085 Exp. 6-30-12 CIVIL STATE OF CALIFORNIA

THE STATE OF CALIFORNIA OR ITS OFFICERS OR AGENTS SHALL NOT BE RESPONSIBLE FOR THE ACCURACY OR COMPLETENESS OF SCANNED COPIES OF THIS PLAN SHEET.

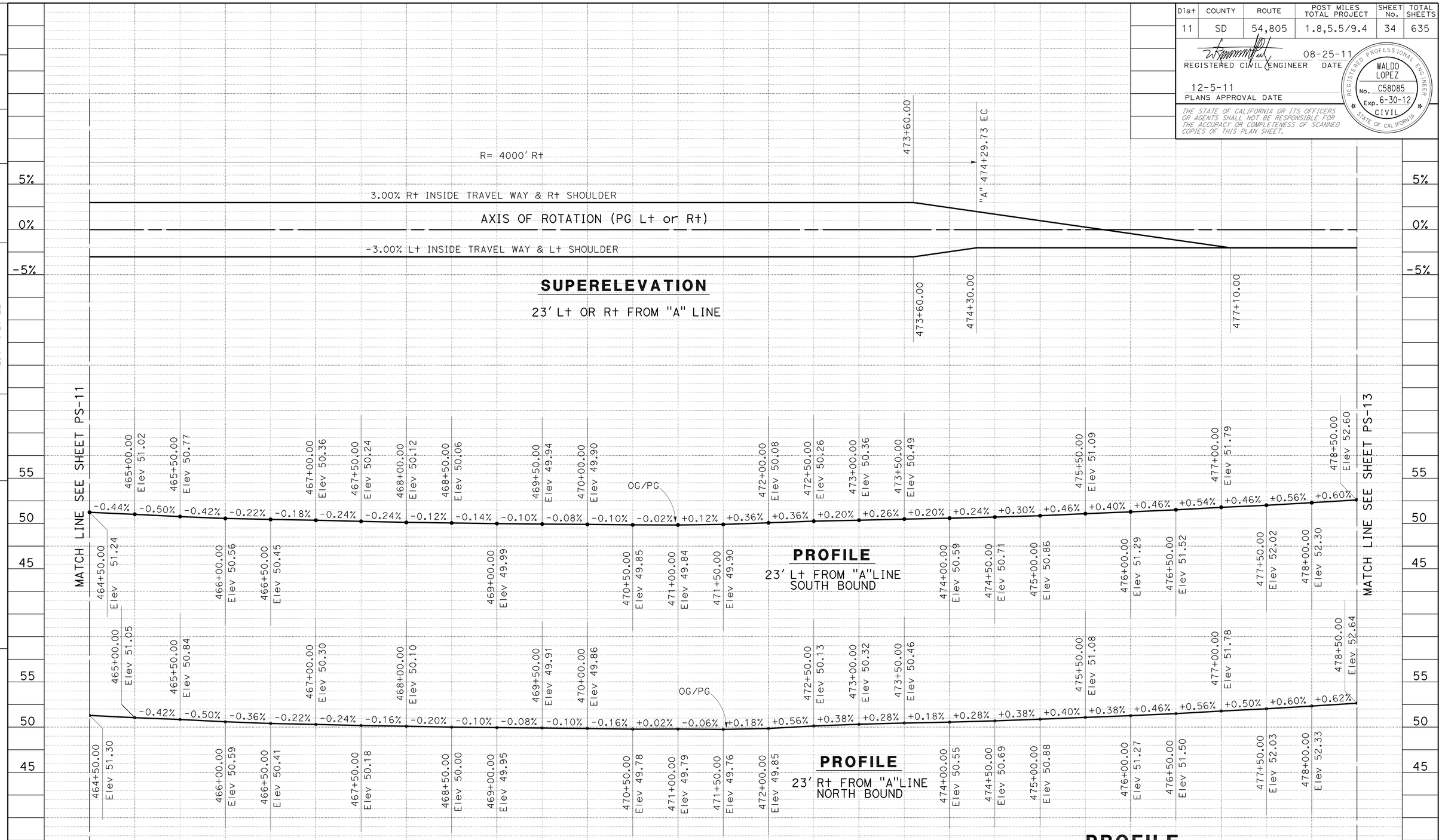

PROFILE AND SUPERELEVATION DIAGRAM

SCALE: Horiz 1" = 50'
Vert 1" = 5'

PS-12

STATE OF CALIFORNIA - DEPARTMENT OF TRANSPORTATION
Caltrans PROJECT DEVELOPMENT

FUNCTIONAL SUPERVISOR: ROGER CARLIN

CALCULATED-DESIGNED BY: WALDO R. LOPEZ
CHECKED BY: WALDO R. LOPEZ

REVISED BY
DATE REVISED

LAST REVISION 08-25-11
DATE PLOTTED => 09-DEC-2011
TIME PLOTTED => 10:11

Dist	COUNTY	ROUTE	POST MILES TOTAL PROJECT	SHEET No.	TOTAL SHEETS
11	SD	54,805	1.8,5.5/9.4	35	635

REGISTERED CIVIL ENGINEER 08-25-11 DATE

12-5-11
PLANS APPROVAL DATE

REGISTERED PROFESSIONAL ENGINEER WALDO LOPEZ No. C58085 Exp. 6-30-12 CIVIL STATE OF CALIFORNIA

THE STATE OF CALIFORNIA OR ITS OFFICERS OR AGENTS SHALL NOT BE RESPONSIBLE FOR THE ACCURACY OR COMPLETENESS OF SCANNED COPIES OF THIS PLAN SHEET.

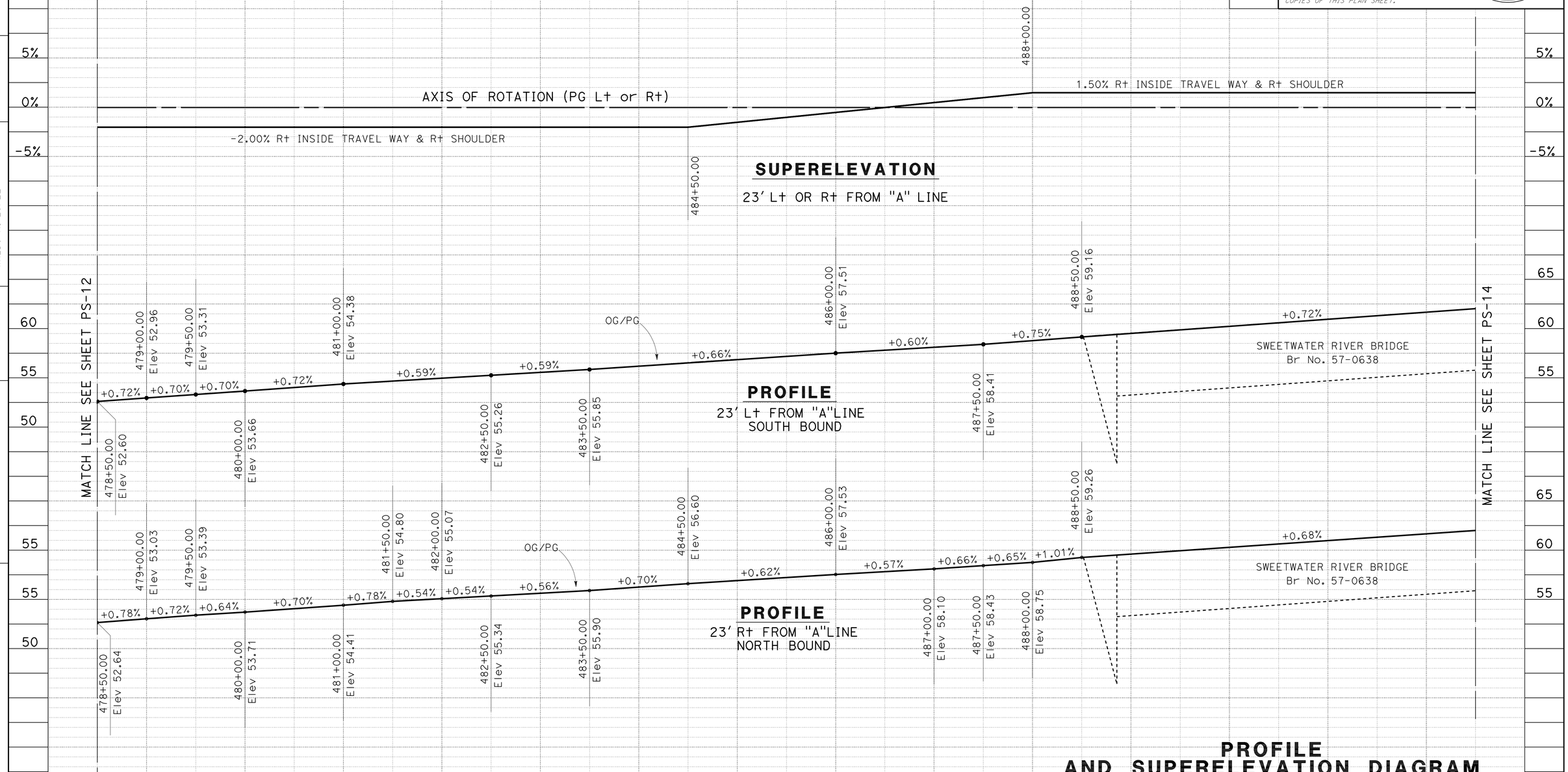

PROFILE AND SUPERELEVATION DIAGRAM

SCALE: Horiz 1" = 50'
Vert 1" = 5'

PS-13

STATION		479	480	481	482	483	484	485	486	487	488	489	490	491	492	TOTAL
CY	Exc	3,025										0				3,025
	Emb	0										0				0

STATE OF CALIFORNIA - DEPARTMENT OF TRANSPORTATION
Caltrans PROJECT DEVELOPMENT

FUNCTIONAL SUPERVISOR: ROGER CARLIN
CALCULATED-DESIGNED BY: WALDO R. LOPEZ
CHECKED BY: WALDO R. LOPEZ
REVISED BY
DATE REVISED

LAST REVISION 08-25-11
DATE PLOTTED => 09-DEC-2011
TIME PLOTTED => 10:11

Dist	COUNTY	ROUTE	POST MILES TOTAL PROJECT	SHEET No.	TOTAL SHEETS
11	SD	54,805	1.8,5.5/9.4	36	635

REGISTERED CIVIL ENGINEER 08-25-11 DATE

12-5-11
PLANS APPROVAL DATE

REGISTERED PROFESSIONAL ENGINEER WALDO LOPEZ No. C58085 Exp. 6-30-12 CIVIL STATE OF CALIFORNIA

THE STATE OF CALIFORNIA OR ITS OFFICERS OR AGENTS SHALL NOT BE RESPONSIBLE FOR THE ACCURACY OR COMPLETENESS OF SCANNED COPIES OF THIS PLAN SHEET.

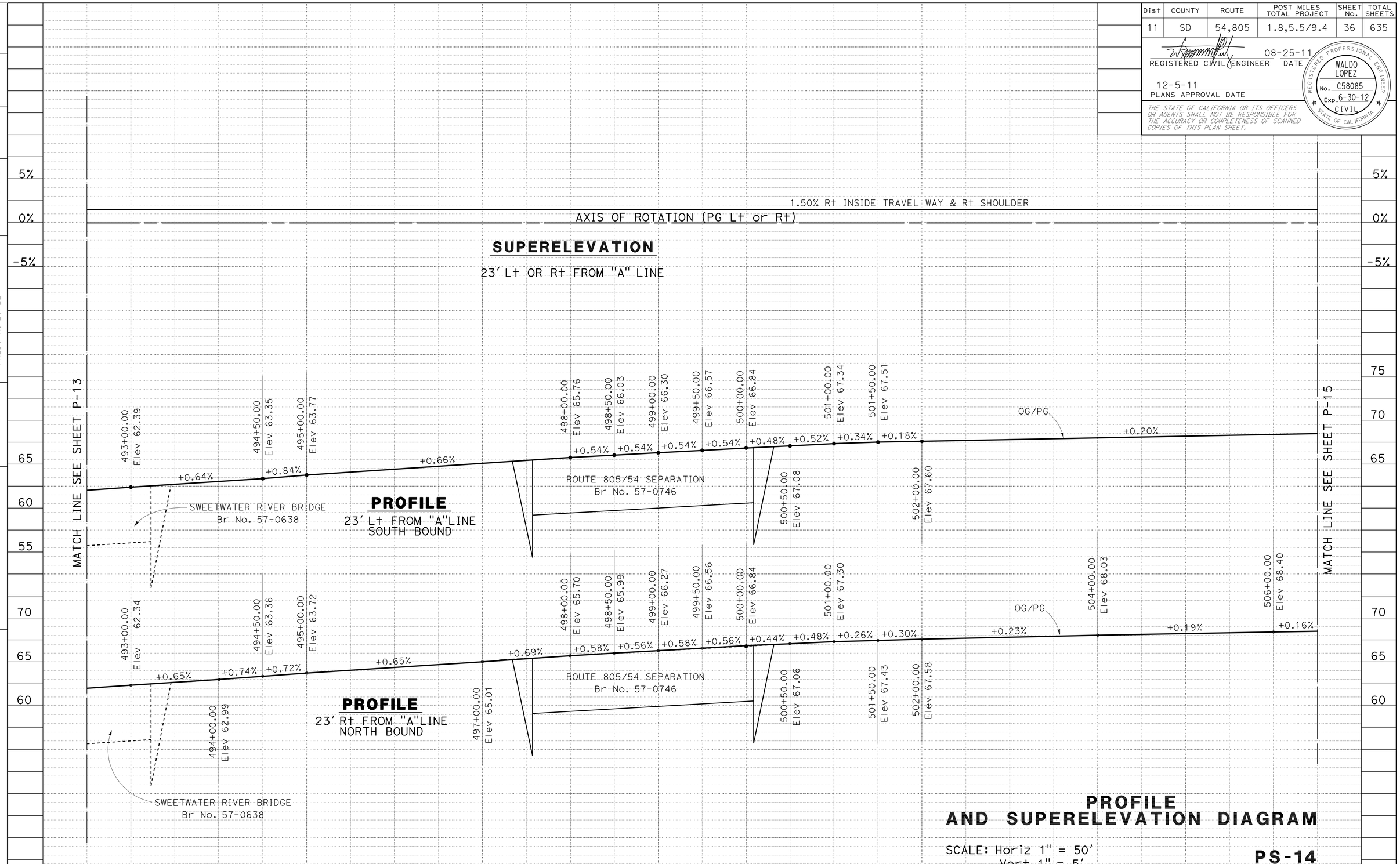

STATION		493	494	495	496	497	498	499	500	501	502	503	504	505	506	TOTAL
CY	Exc	0	872			0			782							1,654
	Emb	0	0			0			49							49

PROFILE AND SUPERELEVATION DIAGRAM

SCALE: Horiz 1" = 50'
Vert 1" = 5'

PS-14

STATE OF CALIFORNIA - DEPARTMENT OF TRANSPORTATION
Caltrans PROJECT DEVELOPMENT

FUNCTIONAL SUPERVISOR: ROGER CARLIN
CALCULATED-DESIGNED BY: WALDO R. LOPEZ
CHECKED BY: WALDO R. LOPEZ
REVISED BY
DATE REVISED

LAST REVISION 08-25-11
DATE PLOTTED => 09-DEC-2011
TIME PLOTTED => 10:11

Dist	COUNTY	ROUTE	POST MILES TOTAL PROJECT	SHEET No.	TOTAL SHEETS
11	SD	54,805	1.8,5.5/9.4	37	635

REGISTERED CIVIL ENGINEER 08-25-11 DATE

12-5-11
PLANS APPROVAL DATE

REGISTERED PROFESSIONAL ENGINEER WALDO LOPEZ No. C58085 Exp. 6-30-12 CIVIL STATE OF CALIFORNIA

THE STATE OF CALIFORNIA OR ITS OFFICERS OR AGENTS SHALL NOT BE RESPONSIBLE FOR THE ACCURACY OR COMPLETENESS OF SCANNED COPIES OF THIS PLAN SHEET.

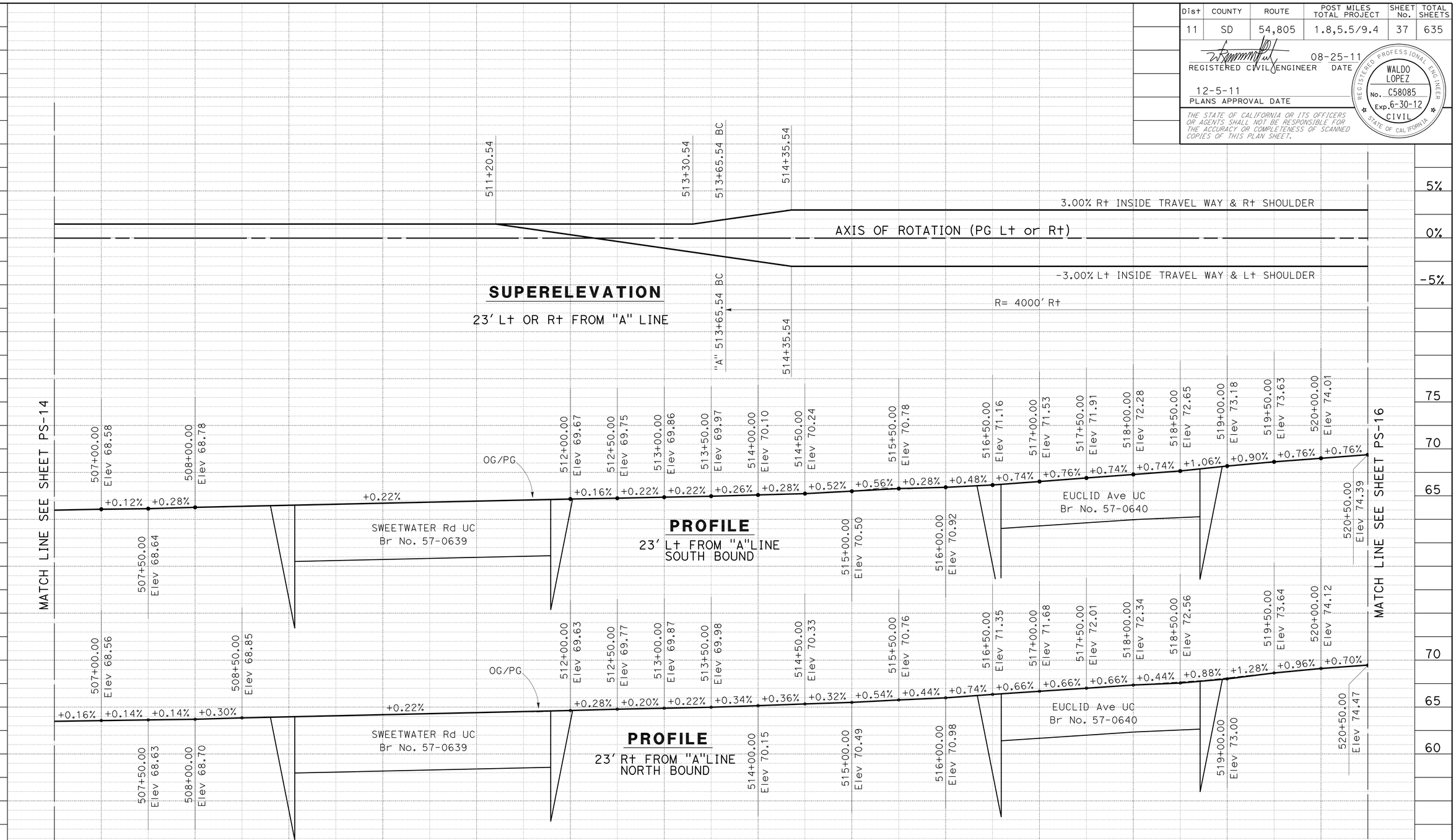

PROFILE AND SUPERELEVATION DIAGRAM

SCALE: Horiz 1" = 50'
Vert 1" = 5'

PS-15

STATION		507	508	509	510	511	512	513	514	515	516	517	518	519	520	TOTAL
CY	Exc	318		0			1,008					0		404		1,730
	Emb	4		0			3					0		0		7

STATE OF CALIFORNIA - DEPARTMENT OF TRANSPORTATION
Caltrans PROJECT DEVELOPMENT

FUNCTIONAL SUPERVISOR: ROGER CARLIN
CALCULATED-DESIGNED BY: WALDO R. LOPEZ
CHECKED BY: WALDO R. LOPEZ
REVISED BY
DATE REVISED

LAST REVISION 08-14-11
DATE PLOTTED => 09-DEC-2011
TIME PLOTTED => 10:11

Dist	COUNTY	ROUTE	POST MILES TOTAL PROJECT	SHEET No.	TOTAL SHEETS
11	SD	54,805	1.8,5.5/9.4	38	635

REGISTERED CIVIL ENGINEER 08-25-11 DATE

12-5-11
PLANS APPROVAL DATE

REGISTERED PROFESSIONAL ENGINEER WALDO LOPEZ No. C58085 Exp. 6-30-12 CIVIL STATE OF CALIFORNIA

THE STATE OF CALIFORNIA OR ITS OFFICERS OR AGENTS SHALL NOT BE RESPONSIBLE FOR THE ACCURACY OR COMPLETENESS OF SCANNED COPIES OF THIS PLAN SHEET.

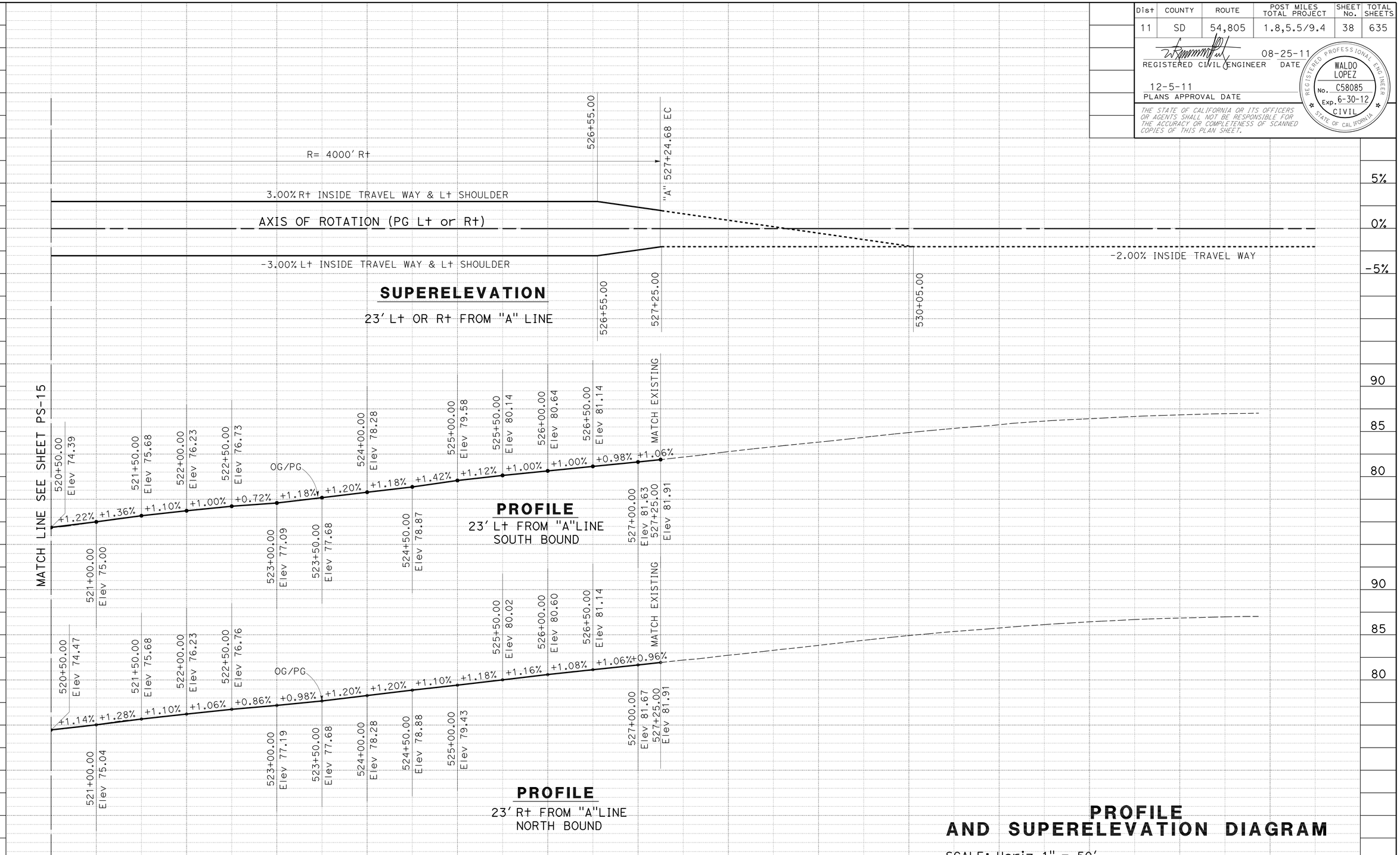

PROFILE AND SUPERELEVATION DIAGRAM

SCALE: Horiz 1" = 50'
Vert 1" = 5'

PS-16

REVISED BY	DATE REVISED
WALDO R. LOPEZ	WALDO R. LOPEZ

CALCULATED-DESIGNED BY
CHECKED BY

FUNCTIONAL SUPERVISOR: ROGER CARLIN

STATE OF CALIFORNIA - DEPARTMENT OF TRANSPORTATION
Caltrans PROJECT DEVELOPMENT

LAST REVISION 08-25-11
DATE PLOTTED => 09-DEC-2011
TIME PLOTTED => 10:11

Dist	COUNTY	ROUTE	POST MILES TOTAL PROJECT	SHEET No.	TOTAL SHEETS
11	SD	54,805	1.8,5.5/9.4	39	635

REGISTERED CIVIL ENGINEER 08-25-11 DATE

12-5-11
PLANS APPROVAL DATE

REGISTERED PROFESSIONAL ENGINEER WALDO LOPEZ No. C58085 Exp. 6-30-12 CIVIL STATE OF CALIFORNIA

THE STATE OF CALIFORNIA OR ITS OFFICERS OR AGENTS SHALL NOT BE RESPONSIBLE FOR THE ACCURACY OR COMPLETENESS OF SCANNED COPIES OF THIS PLAN SHEET.

① 5/8" ø SLEEVE NUT ANCHORAGE (SEE DETAIL E) OR RESIN CAPSULE ANCHORAGE (SEE ALTERNATIVE ANCHORAGE, ON C-3). A TOTAL OF 8 ANCHORAGE UNITS REQUIRED PER PLATE. ALL METAL PLATES TO BE GALVANIZED AFTER FABRICATION. HARDWARE TO BE GALVANIZED OR NON-CORROSIVE.

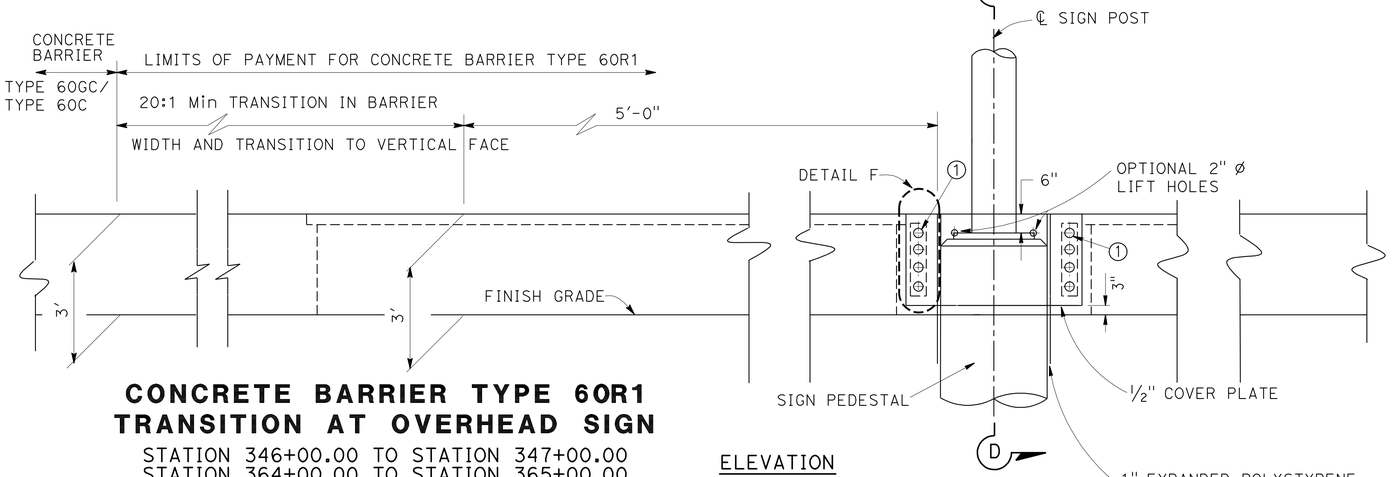

CONCRETE BARRIER TYPE 60R1 TRANSITION AT OVERHEAD SIGN

STATION 346+00.00 TO STATION 347+00.00
STATION 364+00.00 TO STATION 365+00.00
STATION 439+00.00 TO STATION 439+70.00
STATION 514+65.00 TO STATION 515+15.00
STATION 520+05.00 TO STATION 520+55.00

ELEVATION

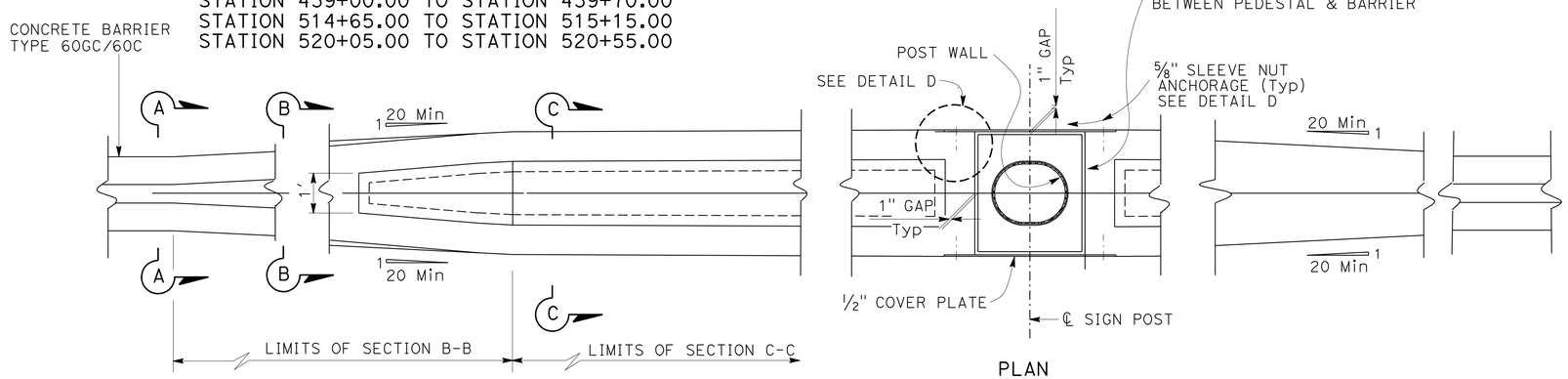

PLAN

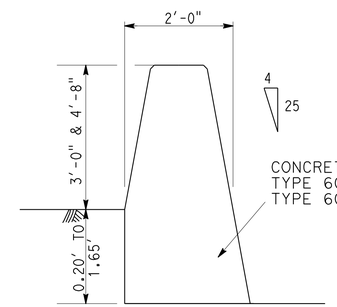

SECTION A-A

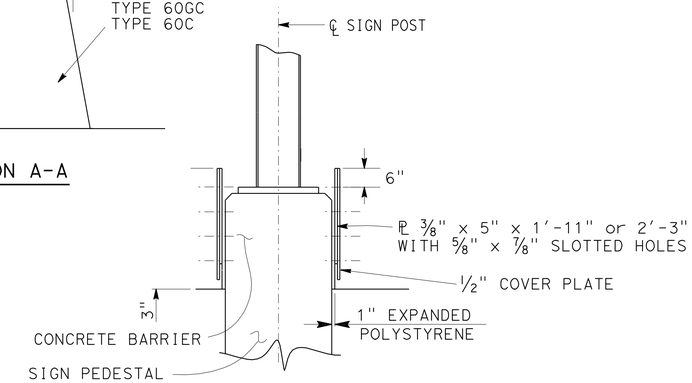

SECTION D-D

NOTE: CONCRETE BARRIER TYPE 60R1 IS SYMMETRICAL ABOUT ℄ OF SIGN POST.

NOTES:

1. FORMING MATERIAL FOR 4" CAP MAY REMAIN IN PLACE.
2. ENCLOSE COLUMN WITH 4" EXPANDED POLYSTYRENE AT LOCATIONS WHERE CONCRETE OR CEMENT TREATED BASE ENCASES THE COLUMN.
3. FOR ALTERNATIVE ANCHORAGE SEE CONSTRUCTION DETAIL C-3.
4. CONTRACTOR OPTIONS FOR FILL BETWEEN BARRIER WALLS.
   - (A) PLACE 6" PCC AT BASE BETWEEN BARRIER WALLS.
   - (B) PLACE GRANULAR MATERIAL FROM BASE TO BOTTOM OF 4" CAP.

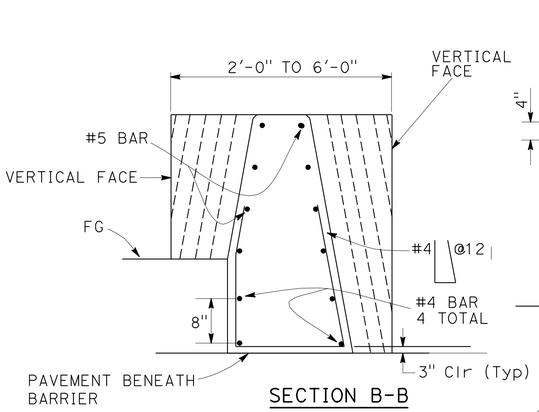

SECTION B-B

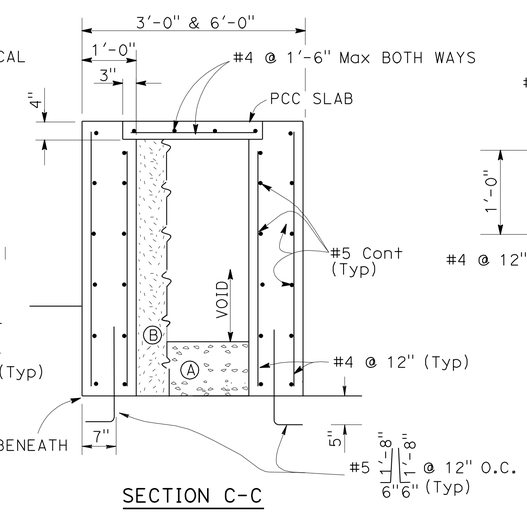

SECTION C-C

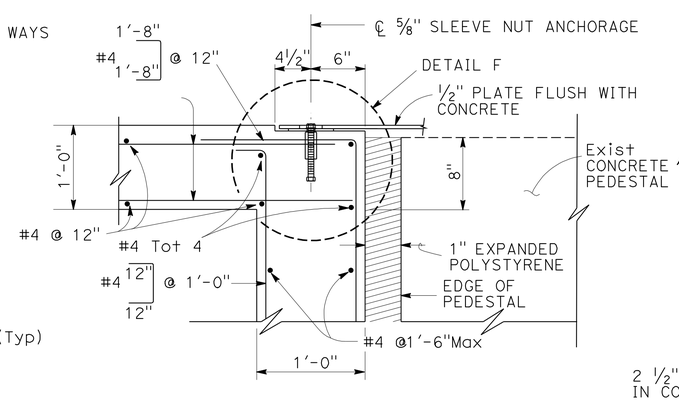

DETAIL D

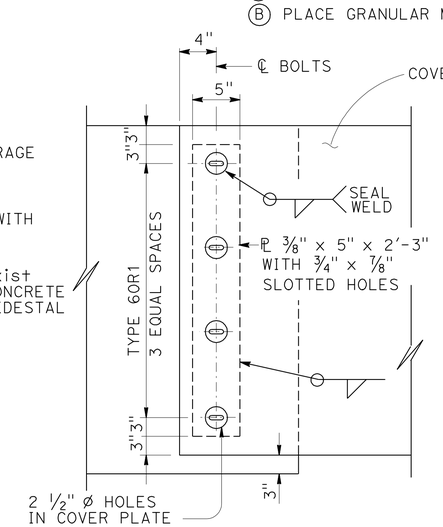

DETAIL F

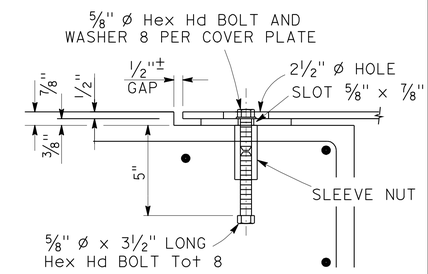

DETAIL E

CONSTRUCTION DETAILS

NO SCALE

C-1

STATE OF CALIFORNIA - DEPARTMENT OF TRANSPORTATION
Caltrans PROJECT DEVELOPMENT

FUNCTIONAL SUPERVISOR: ROGER CARLIN
CALCULATED-DESIGNED BY: WALDO R. LOPEZ
CHECKED BY: WALDO R. LOPEZ
REVISED BY
DATE REVISED

LAST REVISION 08-27-11
DATE PLOTTED => 09-DEC-2011
TIME PLOTTED => 11:23

Dist	COUNTY	ROUTE	POST MILES TOTAL PROJECT	SHEET No.	TOTAL SHEETS
11	SD	54,805	1.8,5.5/9.4	40	635

REGISTERED CIVIL ENGINEER 08-25-11 DATE

12-5-11
PLANS APPROVAL DATE

REGISTERED PROFESSIONAL ENGINEER WALDO LOPEZ No. C58085 Exp. 6-30-12 CIVIL STATE OF CALIFORNIA

THE STATE OF CALIFORNIA OR ITS OFFICERS OR AGENTS SHALL NOT BE RESPONSIBLE FOR THE ACCURACY OR COMPLETENESS OF SCANNED COPIES OF THIS PLAN SHEET.

NOTES:

1. FORMING MATERIAL FOR 4" CAP MAY REMAIN IN PLACE.
2. ENCLOSE COLUMN WITH 4" EXPANDED POLYSTYRENE AT LOCATIONS WHERE CONCRETE OR CEMENT TREATED BASE ENCASES THE COLUMN.
3. FOR ALTERNATE ANCHORAGE SEE CONSTRUCTION DETAIL C-3.
4. CONTRACTOR OPTIONS FOR FILL BETWEEN BARRIER WALLS.
   - (A) PLACE 6" PCC AT BASE BETWEEN BARRIER WALLS.
   - (B) PLACE GRANULAR MATERIAL FROM BASE TO BOTTOM OF 4" CAP.

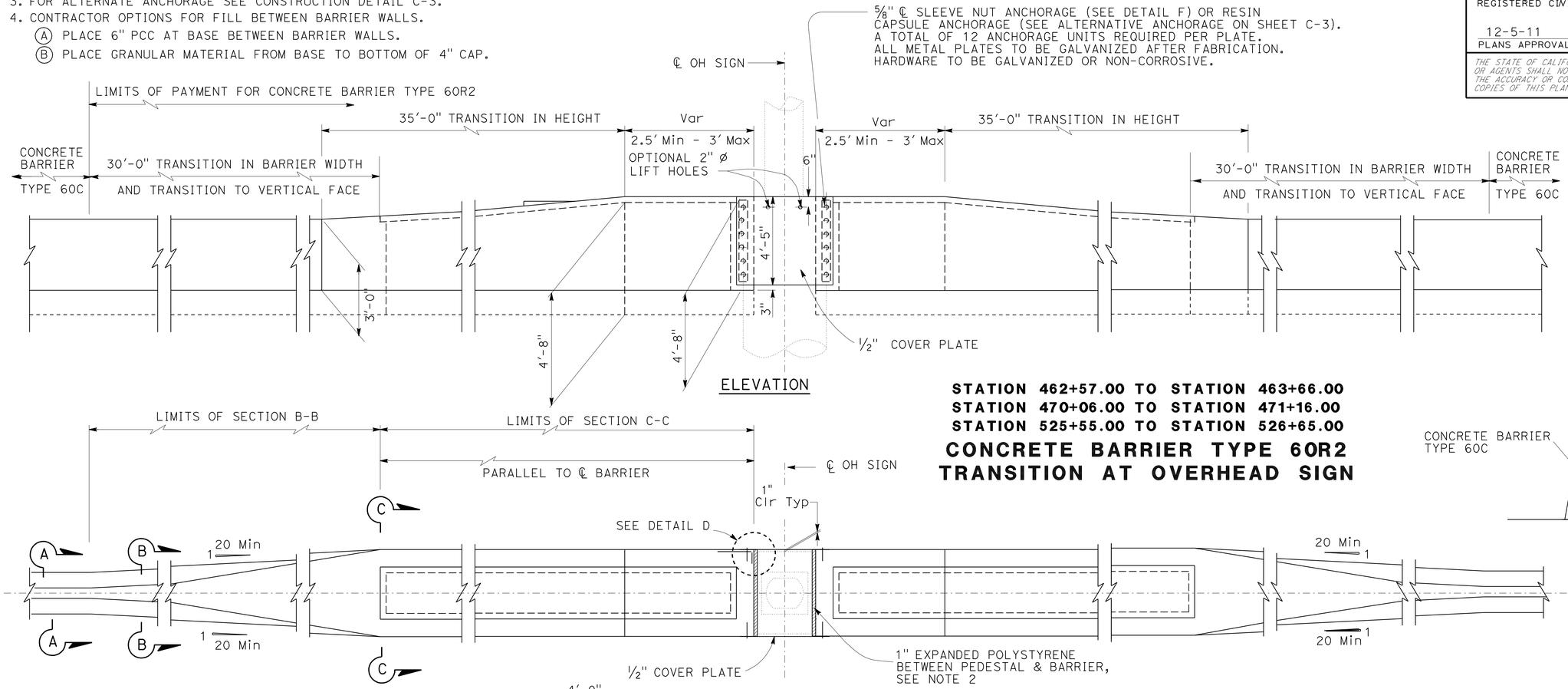

STATION 462+57.00 TO STATION 463+66.00
STATION 470+06.00 TO STATION 471+16.00
STATION 525+55.00 TO STATION 526+65.00

CONCRETE BARRIER TYPE 60R2 TRANSITION AT OVERHEAD SIGN

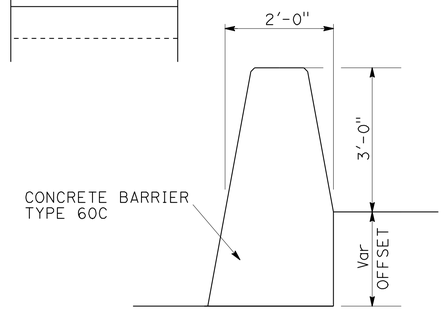

SECTION A-A

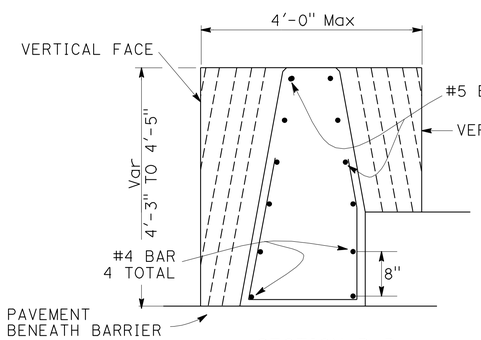

SECTION B-B

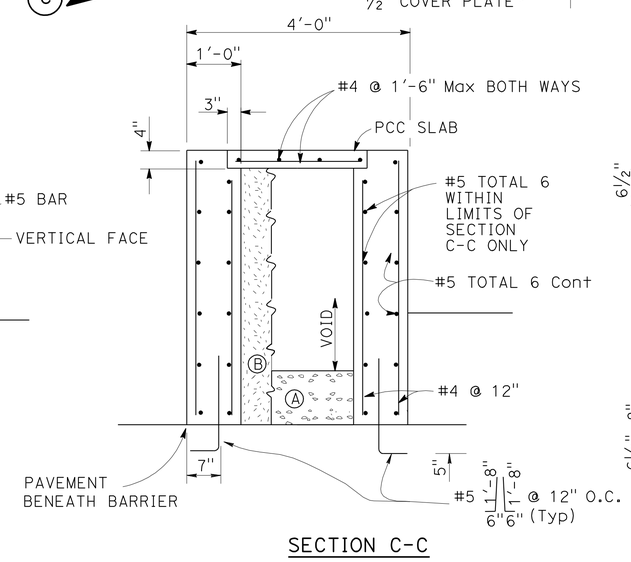

SECTION C-C

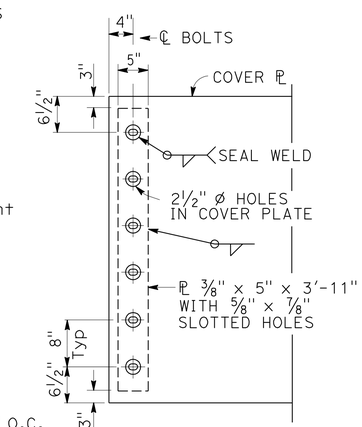

DETAIL F

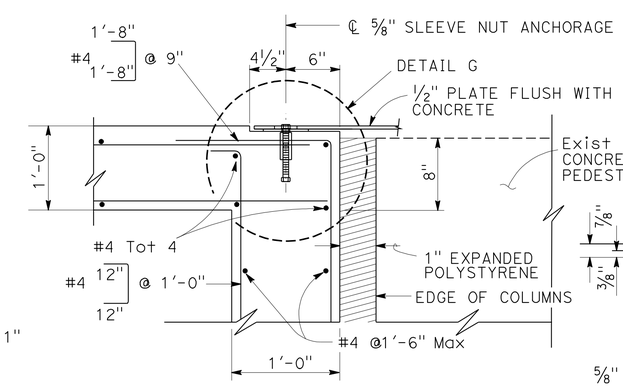

DETAIL D

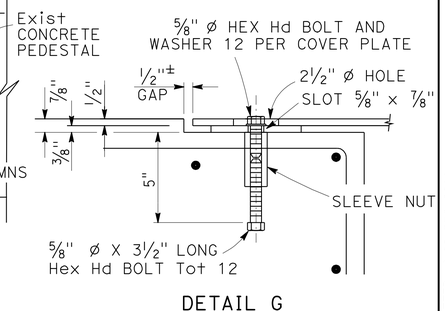

DETAIL G

CONSTRUCTION DETAILS C-2

NO SCALE

REVISED BY	DATE REVISED

CALCULATED-DESIGNED BY: WALDO R. LOPEZ
CHECKED BY: WALDO R. LOPEZ
FUNCTIONAL SUPERVISOR: ROGER CARLIN

STATE OF CALIFORNIA - DEPARTMENT OF TRANSPORTATION
Caltrans PROJECT DEVELOPMENT

LAST REVISION 08-27-11 | DATE PLOTTED => 09-DEC-2011 | TIME PLOTTED => 11:23

Dist	COUNTY	ROUTE	POST MILES TOTAL PROJECT	SHEET No.	TOTAL SHEETS
11	SD	54,805	1.8,5.5/9.4	41	635

REGISTERED CIVIL ENGINEER 08-25-11 DATE

12-5-11
PLANS APPROVAL DATE

REGISTERED PROFESSIONAL ENGINEER WALDO LOPEZ No. C58085 Exp. 6-30-12 CIVIL STATE OF CALIFORNIA

THE STATE OF CALIFORNIA OR ITS OFFICERS OR AGENTS SHALL NOT BE RESPONSIBLE FOR THE ACCURACY OR COMPLETENESS OF SCANNED COPIES OF THIS PLAN SHEET.

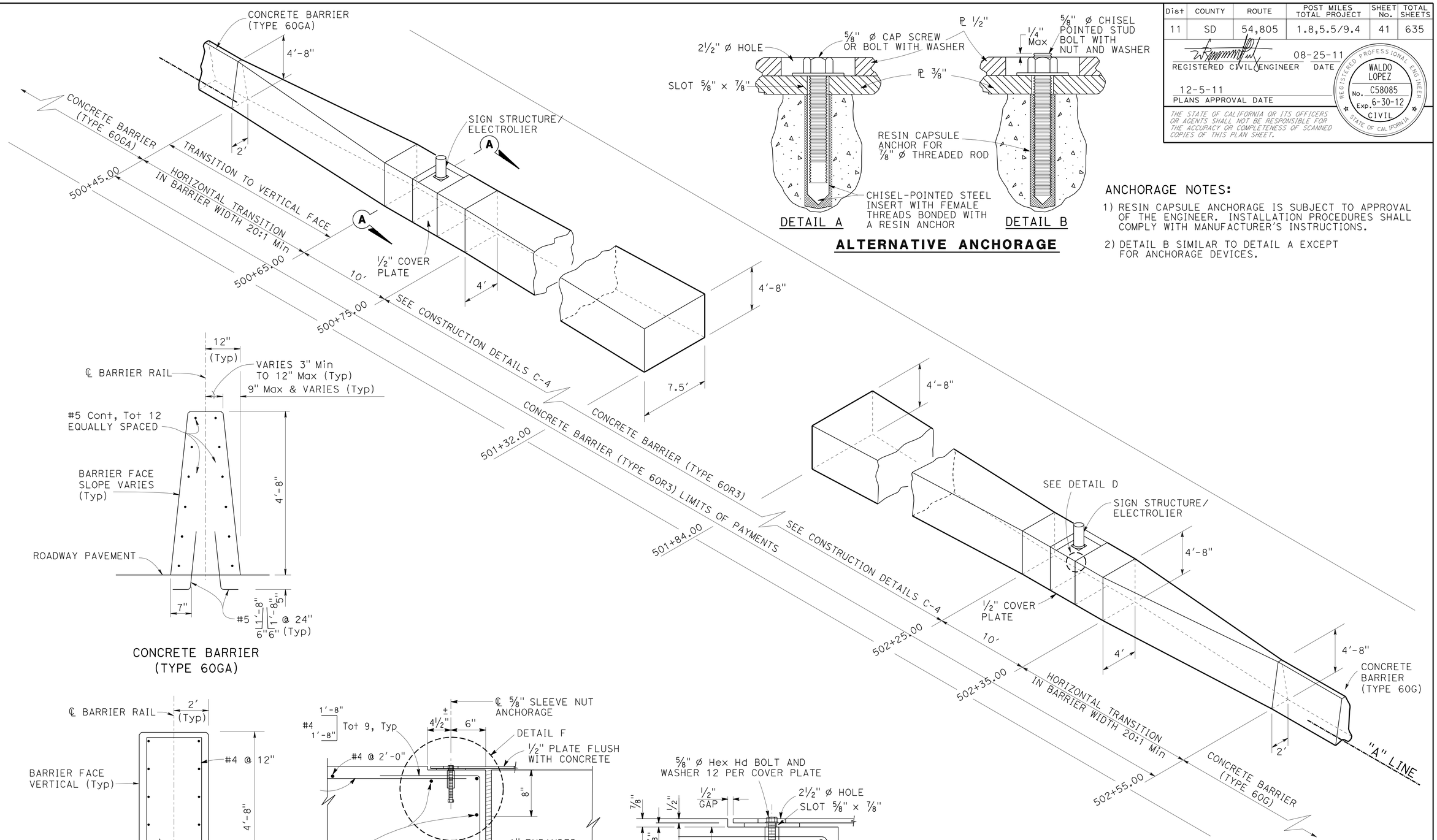

ANCHORAGE NOTES:

1) RESIN CAPSULE ANCHORAGE IS SUBJECT TO APPROVAL OF THE ENGINEER. INSTALLATION PROCEDURES SHALL COMPLY WITH MANUFACTURER'S INSTRUCTIONS.

2) DETAIL B SIMILAR TO DETAIL A EXCEPT FOR ANCHORAGE DEVICES.

CONCRETE BARRIER TRANSITION TYPE 60R3

Sta "A" 500+45.00 - "A" 502+55.00

CONSTRUCTION DETAILS

NO SCALE

C-3

STATE OF CALIFORNIA - DEPARTMENT OF TRANSPORTATION
Caltrans PROJECT DEVELOPMENT

FUNCTIONAL SUPERVISOR: ROGER CARLIN
CALCULATED-DESIGNED BY: WALDO R. LOPEZ
CHECKED BY: WALDO R. LOPEZ
REVISED BY
DATE REVISED

LAST REVISION 08-27-11
DATE PLOTTED => 09-DEC-2011
TIME PLOTTED => 11:24

Dist	COUNTY	ROUTE	POST MILES TOTAL PROJECT	SHEET No.	TOTAL SHEETS
11	SD	54,805	1.8,5.5/9.4	42	635

REGISTERED CIVIL ENGINEER 08-25-11 DATE

12-5-11
PLANS APPROVAL DATE

REGISTERED PROFESSIONAL ENGINEER WALDO LOPEZ No. C58085 Exp. 6-30-12 CIVIL STATE OF CALIFORNIA

THE STATE OF CALIFORNIA OR ITS OFFICERS OR AGENTS SHALL NOT BE RESPONSIBLE FOR THE ACCURACY OR COMPLETENESS OF SCANNED COPIES OF THIS PLAN SHEET.

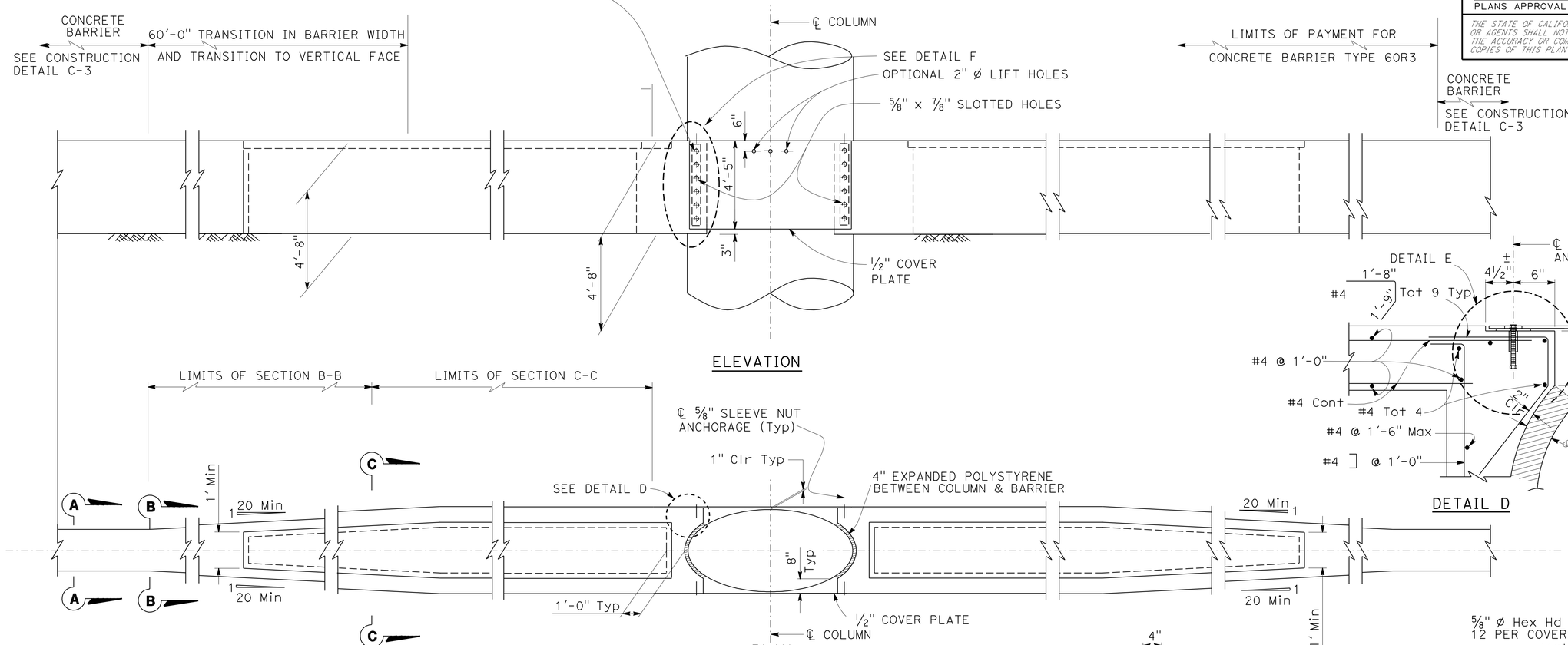

NOTES:

1. CONTRACTOR OPTIONS FOR FILL BETWEEN BARRIER WALLS.
   - (A) PLACE 2'-0" PCC AT BASE BETWEEN BARRIER WALLS.
   - (B) PLACE GRANULAR MATERIAL FROM BASE TO BOTTOM OF 4" CAP.
2. FORMING MATERIAL FOR 4" CAP MAY REMAIN IN PLACE.
3. ENCLOSE COLUMN WITH 4" EXPANDED POLYSTYRENE AT AT LOCATIONS WHERE CONCRETE OR CEMENT TREATED BASE ENCASES THE COLUMN.
3. FOR ALTERNATIVE ANCHORAGE, SEE CONSTRUCTION DETAIL C-3.

CONCRET BARRIER TYPE 60R3 TRANSITION AT BRIDGE COLUMN

STATION 500+75.00 TO STATION 502+25.00

CONSTRUCTION DETAILS

NO SCALE

C-4

STATE OF CALIFORNIA - DEPARTMENT OF TRANSPORTATION
Caltrans PROJECT DEVELOPMENT

FUNCTIONAL SUPERVISOR: ROGER CARLIN
CALCULATED-DESIGNED BY: WALDO R. LOPEZ
CHECKED BY: WALDO R. LOPEZ
REVISED BY
DATE REVISED

LAST REVISION 08-27-11
DATE PLOTTED => 09-DEC-2011
TIME PLOTTED => 11:24

Dist	COUNTY	ROUTE	POST MILES TOTAL PROJECT	SHEET No.	TOTAL SHEETS
11	SD	54,805	1.8,5.5/9.4	43	635

REGISTERED CIVIL ENGINEER 08-25-11 DATE

12-5-11
PLANS APPROVAL DATE

REGISTERED PROFESSIONAL ENGINEER WALDO LOPEZ No. C58085 Exp. 6-30-12 CIVIL STATE OF CALIFORNIA

THE STATE OF CALIFORNIA OR ITS OFFICERS OR AGENTS SHALL NOT BE RESPONSIBLE FOR THE ACCURACY OR COMPLETENESS OF SCANNED COPIES OF THIS PLAN SHEET.

MINOR CONCRETE (TEXTURED PAVING)

◇X	SHEET	RAMP LINE	A (N) (LF)	B (N) (LF)	C (N) (LF)
1	L-7	"HC"	12.0	29.0	30.0
2	L-7	"H4R"	21.0	24.0	32.0
3	L-7	"H4R"	18.0	98.0	31.0
4	L-9	"B4R"	20.0	90.0	31.0

(N) NOT A PAY ITEM, FOR INFORMATION ONLY.

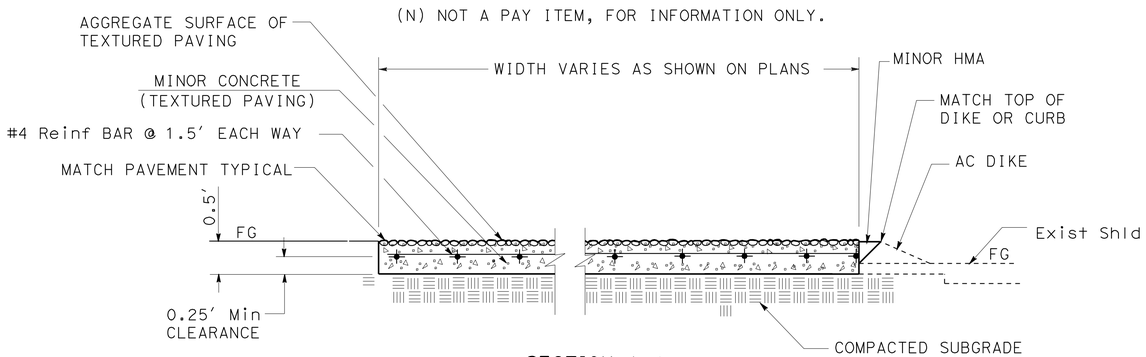

SECTION A-A

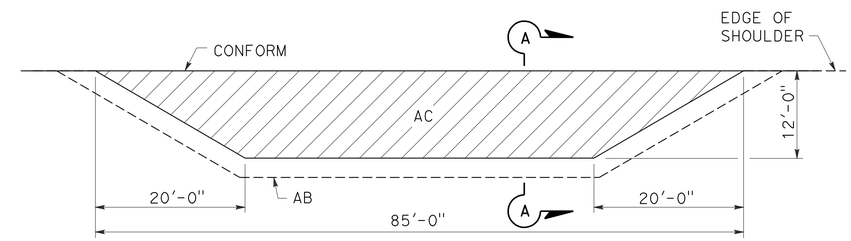

PLAN

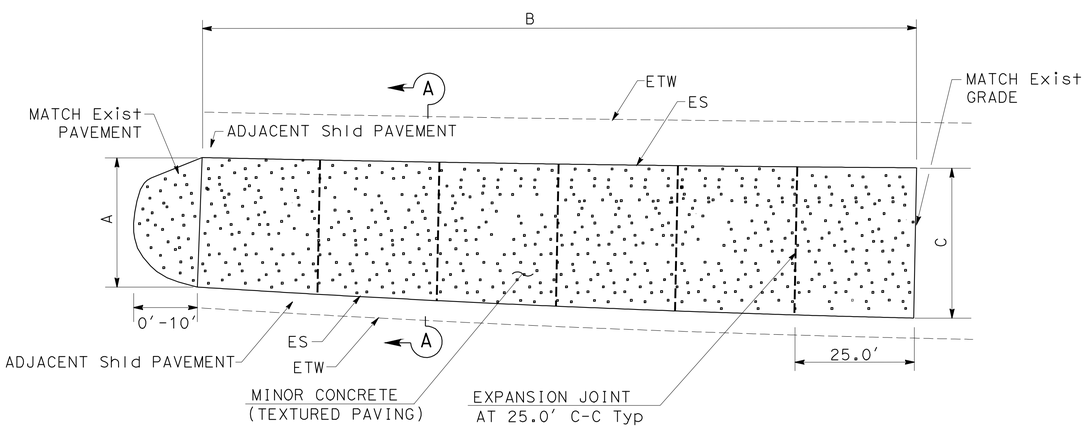

GORE PAVING

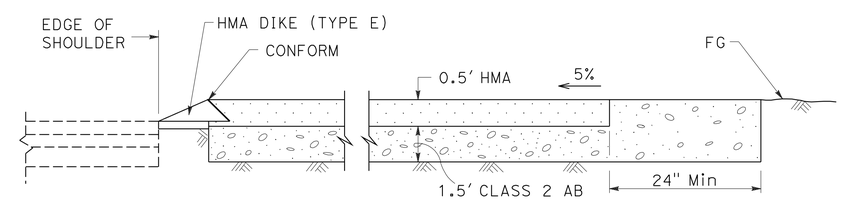

SECTION A-A

MAINTENANCE VEHICLE PULLOUT (MODIFIED)

MINOR CONCRETE (TEXTURED PAVING)

(TYPICAL)

NOTES:

1. SEE PAVEMENT DELINEATION AND SIGN PLAN FOR SIGN LOCATIONS.
2. SEE SIGN DETAILS FOR SIGN INSTALLATION IN PAVED AREAS.
3. INSTALL SLEEVES AT ANY EXISTING SIGNS TO REMAIN IN MINOR CONCRETE (TEXTURED PAVING) AREAS PER SIGN INSTALLATION DETAILS.

CONSTRUCTION DETAILS

NO SCALE

C-5

STATE OF CALIFORNIA - DEPARTMENT OF TRANSPORTATION
Caltrans PROJECT DEVELOPMENT

FUNCTIONAL SUPERVISOR: ROGER CARLIN
CALCULATED-DESIGNED BY: WALDO R. LOPEZ
CHECKED BY: WALDO R. LOPEZ
REVISED BY
DATE REVISED

LAST REVISION 08-27-11
DATE PLOTTED => 09-DEC-2011
TIME PLOTTED => 11:24

Dist	COUNTY	ROUTE	POST MILES TOTAL PROJECT	SHEET No.	TOTAL SHEETS
11	SD	54,805	1.8,5.5/9.4	44	635

REGISTERED CIVIL ENGINEER 08-25-11 DATE

12-5-11
PLANS APPROVAL DATE

REGISTERED PROFESSIONAL ENGINEER WALDO LOPEZ No. C58085 Exp. 6-30-12 CIVIL STATE OF CALIFORNIA

THE STATE OF CALIFORNIA OR ITS OFFICERS OR AGENTS SHALL NOT BE RESPONSIBLE FOR THE ACCURACY OR COMPLETENESS OF SCANNED COPIES OF THIS PLAN SHEET.

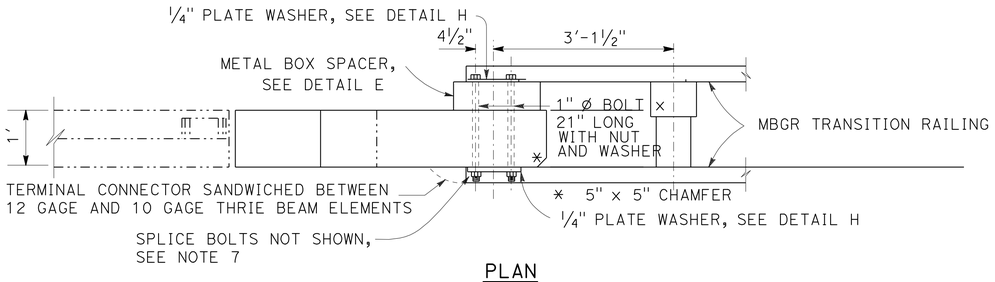

PLAN

DIRECTION OF TRAFFIC

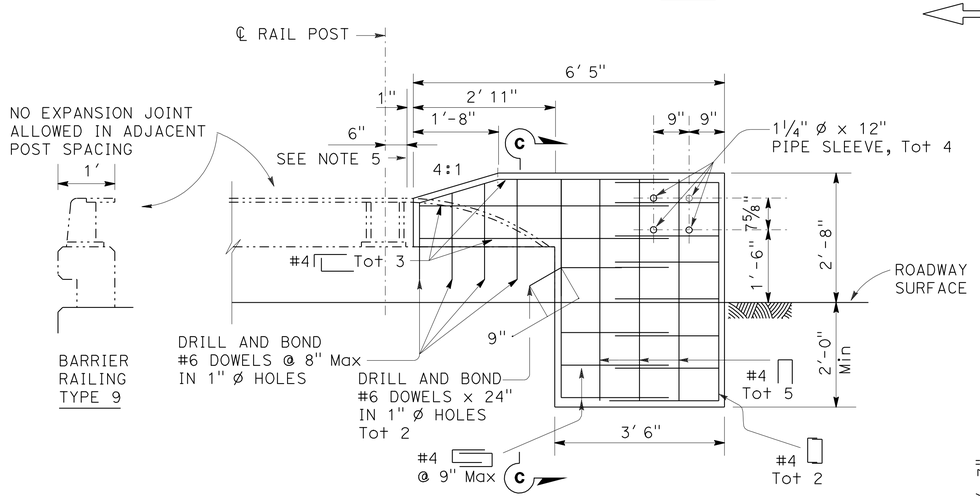

ELEVATION

EXISTING BARRIER RAILING CONNECTION TYPE 9

ALTERNATIVE 1

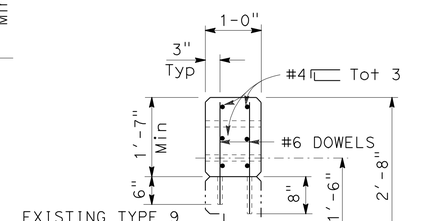

SECTION C-C

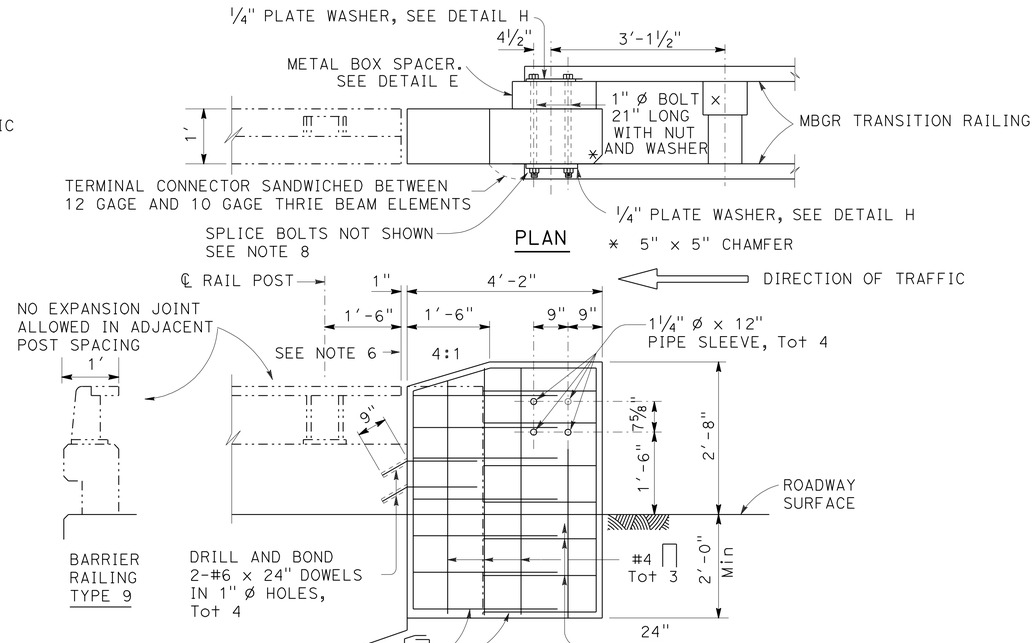

ELEVATION

EXISTING BARRIER RAILING TYPE 9

ALTERNATIVE 2

1. FOR DETAILS NOT SHOWN, SEE STANDARD PLANS
2. DEPENDANT DIMENSIONS WILL BE VERIFIED IN THE FIELD BEFORE FABRICATING ANY END CONNECTION TO CONFORM WITH EXISTING PAVED CONDITIONS.
3. FOR THRIE BEAM CONNECTION, SEE STANDARD PLANS "THRIE BEAM BARRIER CONNECTIONS TO BRIDGE RAILLING".
4. ALL PLATES AND BOLTS ARE GALVANIZED.
5. CUT AND REMOVE THAT PORTION OF EXISTING TYPE 9, AND BAGR AS REQUIRED.
6. IF RAIL IS NOT CONTINUOUS OVER 2 POSTS, USE SPLICE AT EXPANSION JOINT.
7. EXTERIOR SPLICE BOLT HOLES SHALL BE THE STANDARD 7/8" x 1 1/8" DIA. WASHERS SHALL BE USED WITH SPLICE BOLTS.
8. TAPER THE TOP OF THE END OF THE CONCRETE BLOCK AT 4:1 TO MATCH THE TOP ELEVATION OF THE BRIDGE RAIL ELEMENT.

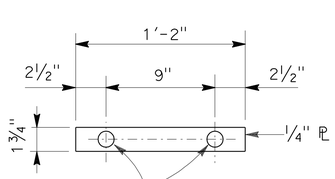

DETAIL H

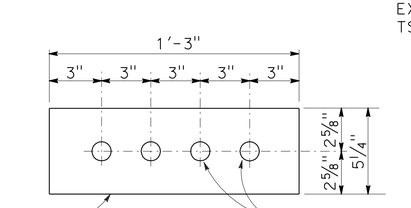

SPLICE PLATE

RAIL SPLICE DETAIL

SEE NOTE 7

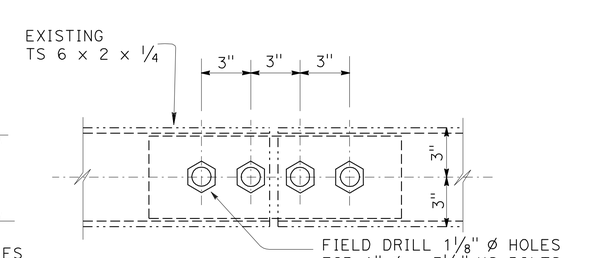

MODIFIED TUBE

CONSTRUCTION DETAILS

NO SCALE

C-6

STATE OF CALIFORNIA - DEPARTMENT OF TRANSPORTATION
Caltrans PROJECT DEVELOPMENT

FUNCTIONAL SUPERVISOR: ROGER CARLIN
CALCULATED-DESIGNED BY: WALDO R. LOPEZ
CHECKED BY: WALDO R. LOPEZ
REVISED BY
DATE REVISED

LAST REVISION 08-27-11
DATE PLOTTED => 12-DEC-2011
TIME PLOTTED => 08:40

Dist	COUNTY	ROUTE	POST MILES TOTAL PROJECT	SHEET No.	TOTAL SHEETS
11	SD	54,805	1.8,5.5/9.4	45	635

REGISTERED CIVIL ENGINEER 08-25-11 DATE

12-5-11
PLANS APPROVAL DATE

REGISTERED PROFESSIONAL ENGINEER WALDO LOPEZ No. C58085 Exp. 6-30-12 CIVIL STATE OF CALIFORNIA

THE STATE OF CALIFORNIA OR ITS OFFICERS OR AGENTS SHALL NOT BE RESPONSIBLE FOR THE ACCURACY OR COMPLETENESS OF SCANNED COPIES OF THIS PLAN SHEET.

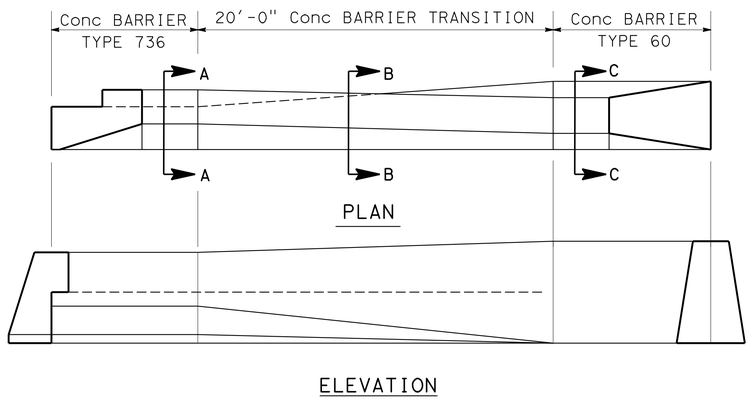

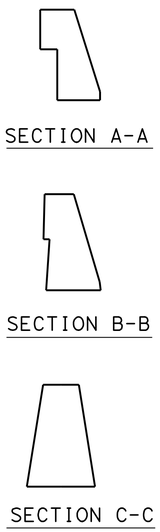

CONCRETE BARRIER TRANSITION

TYPICAL PLACEMENT OF TRAFFIC PLASTIC DRUM

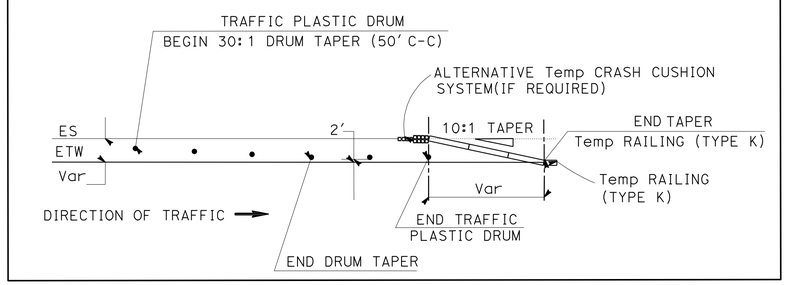

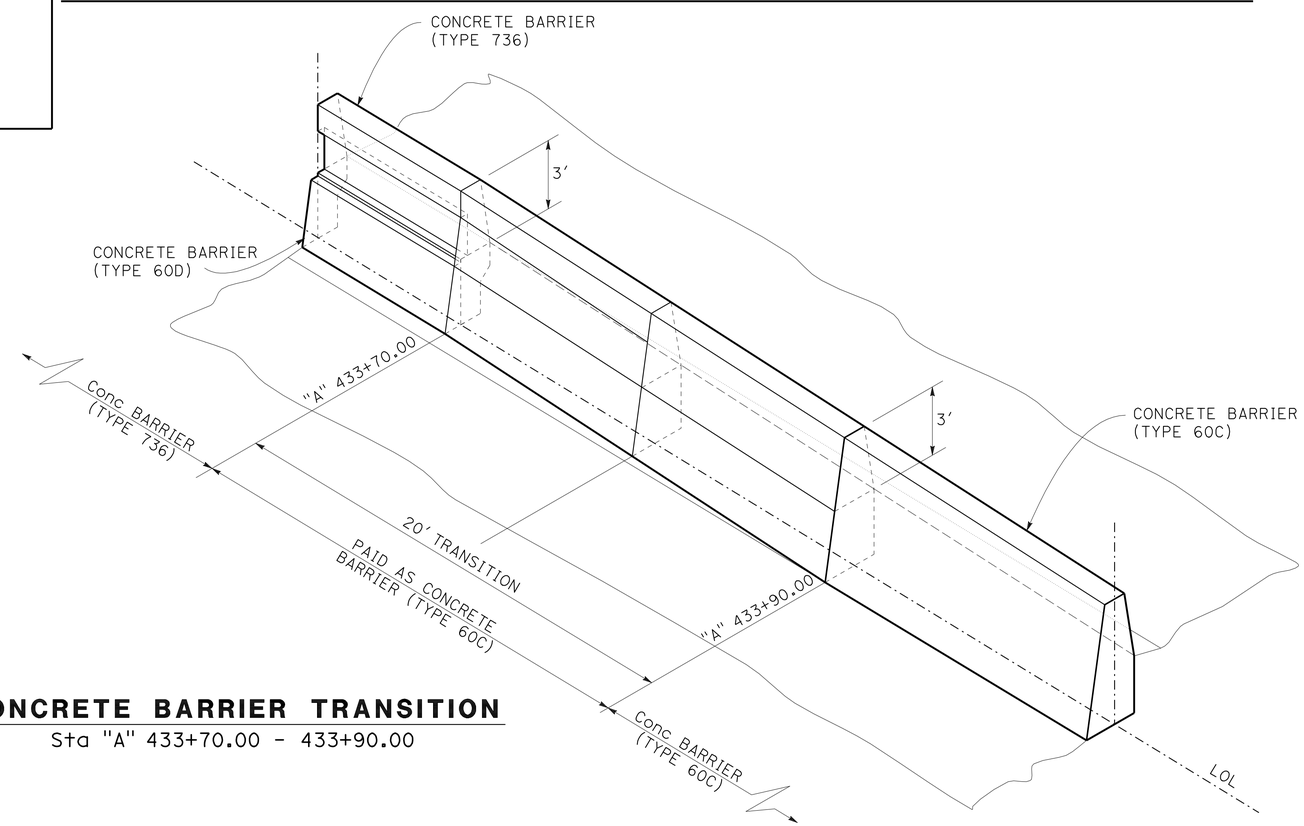

CONCRETE BARRIER TRANSITION

Sta "A" 433+70.00 - 433+90.00

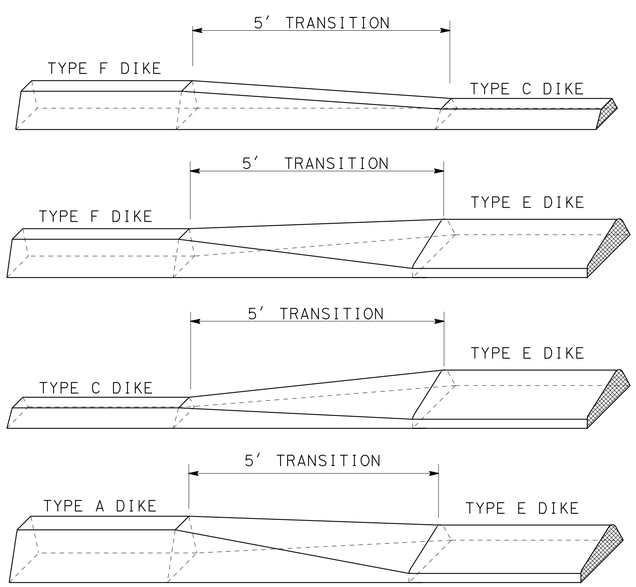

DIKE TRANSITION DETAILS

CONSTRUCTION DETAILS

NO SCALE

C-7

STATE OF CALIFORNIA - DEPARTMENT OF TRANSPORTATION
Caltrans PROJECT DEVELOPMENT

FUNCTIONAL SUPERVISOR: ROGER CARLIN
CALCULATED-DESIGNED BY: WALDO R. LOPEZ
CHECKED BY: WALDO R. LOPEZ
REVISED BY
DATE REVISED

LAST REVISION 08-27-11
DATE PLOTTED => 09-DEC-2011
TIME PLOTTED => 11:24

Dist	COUNTY	ROUTE	POST MILES TOTAL PROJECT	SHEET No.	TOTAL SHEETS
11	SD	54,805	1.8,5.5/9.4	46	635

REGISTERED CIVIL ENGINEER 08-25-11 DATE

12-5-11
PLANS APPROVAL DATE

REGISTERED PROFESSIONAL ENGINEER
WALDO LOPEZ
No. C58085
Exp. 6-30-12
CIVIL
STATE OF CALIFORNIA

THE STATE OF CALIFORNIA OR ITS OFFICERS OR AGENTS SHALL NOT BE RESPONSIBLE FOR THE ACCURACY OR COMPLETENESS OF SCANNED COPIES OF THIS PLAN SHEET.

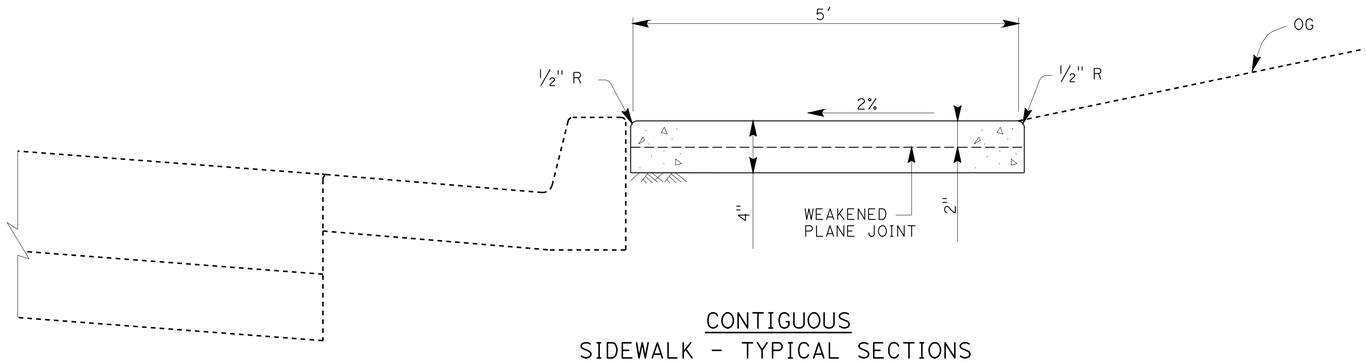

CONTIGUOUS
SIDEWALK - TYPICAL SECTIONS

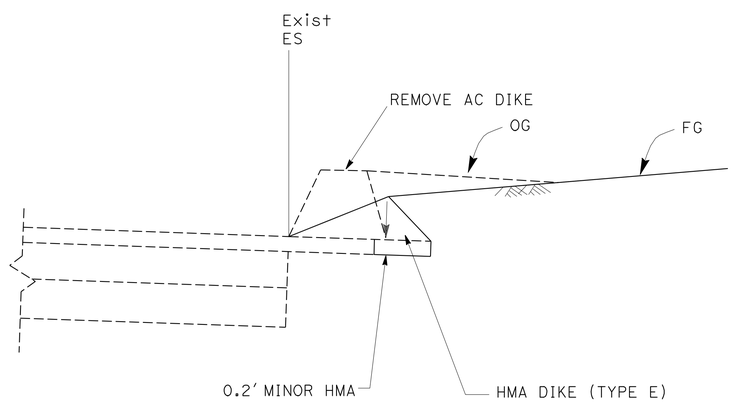

NEW HMA DIKE PLACEMENT

CONSTRUCTION DETAILS

NO SCALE

C-8

STATE OF CALIFORNIA - DEPARTMENT OF TRANSPORTATION
Caltrans PROJECT DEVELOPMENT

FUNCTIONAL SUPERVISOR: ROGER CARLIN
CALCULATED-DESIGNED BY: WALDO R. LOPEZ
CHECKED BY: WALDO R. LOPEZ
REVISED BY
DATE REVISED

LAST REVISION 08-27-11
DATE PLOTTED => 09-DEC-2011
TIME PLOTTED => 11:24

Dist	COUNTY	ROUTE	POST MILES TOTAL PROJECT	SHEET No.	TOTAL SHEETS
11	SD	54,805	1.8,5.5/9.4	47	635

REGISTERED CIVIL ENGINEER 08-25-11 DATE

12-5-11
PLANS APPROVAL DATE

REGISTERED PROFESSIONAL ENGINEER WALDO LOPEZ No. C58085 Exp. 6-30-12 CIVIL STATE OF CALIFORNIA

THE STATE OF CALIFORNIA OR ITS OFFICERS OR AGENTS SHALL NOT BE RESPONSIBLE FOR THE ACCURACY OR COMPLETENESS OF SCANNED COPIES OF THIS PLAN SHEET.

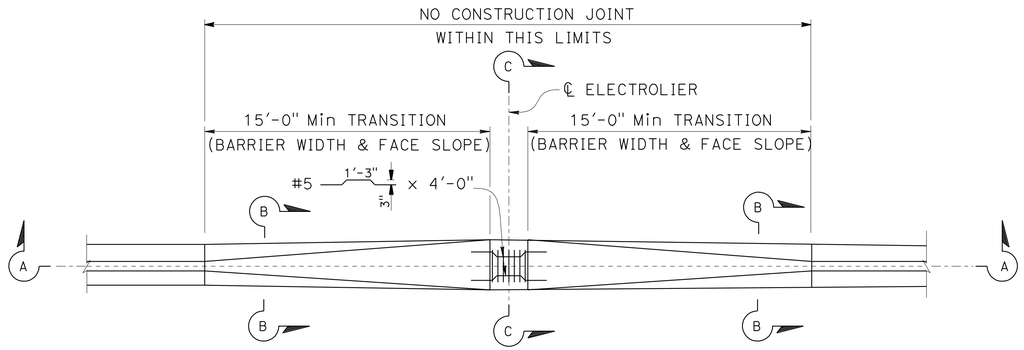

NOTE: ELECTROLIER AND BASE PLATE NOT SHOWN

PLAN

1/4" = 1'-0"

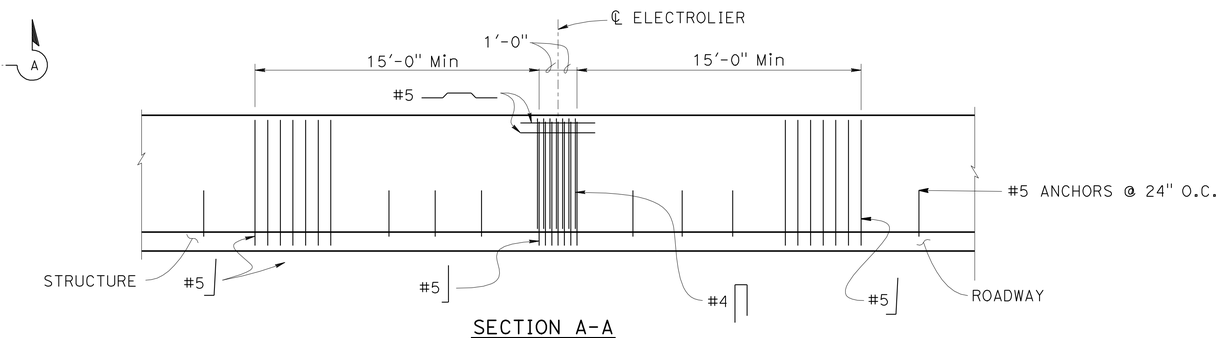

SECTION A-A

1/4" = 1'-0"

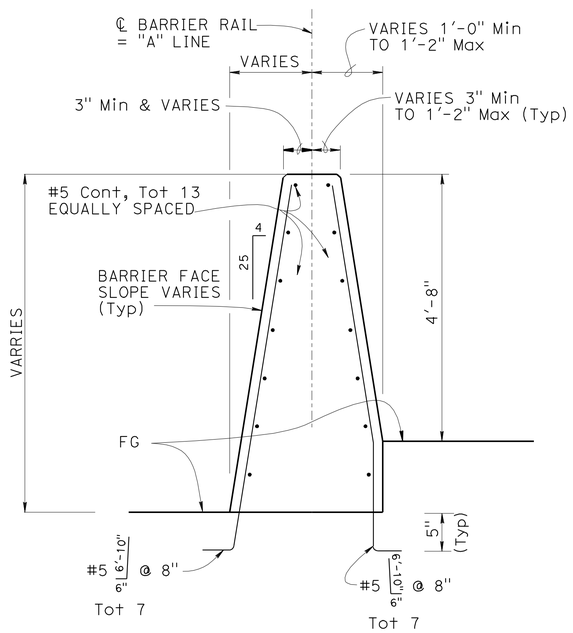

SECTION B-B

3/4" = 1'-0"

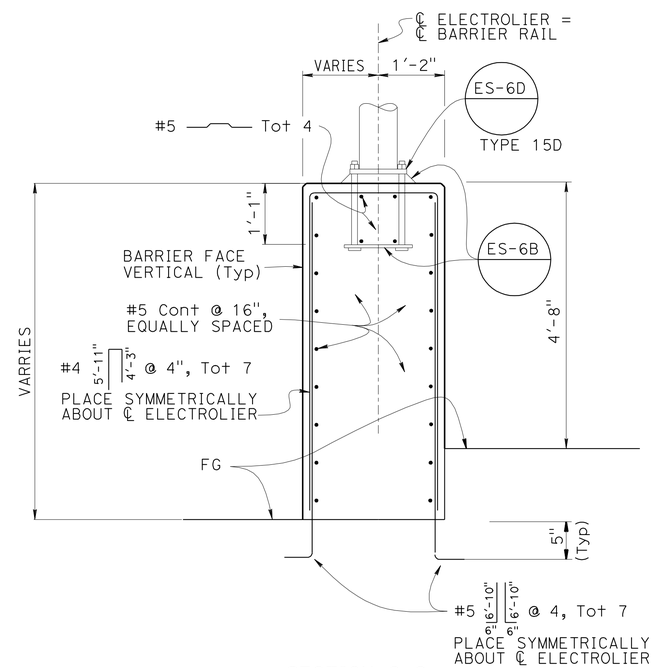

SECTION C-C

3/4" = 1'-0"

ELECTROLIER/CONCRETE BARRIER TYPE 60GC DETAILS

CONSTRUCTION DETAILS

SCALE AS SHOWN

C-9

STATE OF CALIFORNIA - DEPARTMENT OF TRANSPORTATION
Caltrans PROJECT DEVELOPMENT

FUNCTIONAL SUPERVISOR: ROGER CARLIN
CALCULATED-DESIGNED BY: WALDO R. LOPEZ
CHECKED BY: WALDO R. LOPEZ
REVISED BY
DATE REVISED

LAST REVISION 08-27-11
DATE PLOTTED => 09-DEC-2011
TIME PLOTTED => 11:24

Dist	COUNTY	ROUTE	POST MILES TOTAL PROJECT	SHEET No.	TOTAL SHEETS
11	SD	54,805	1.8,5.5/9.4	48	635

REGISTERED CIVIL ENGINEER 08-25-11 DATE

12-5-11
PLANS APPROVAL DATE

REGISTERED PROFESSIONAL ENGINEER WALDO LOPEZ No. C58085 Exp. 6-30-12 CIVIL STATE OF CALIFORNIA

THE STATE OF CALIFORNIA OR ITS OFFICERS OR AGENTS SHALL NOT BE RESPONSIBLE FOR THE ACCURACY OR COMPLETENESS OF SCANNED COPIES OF THIS PLAN SHEET.

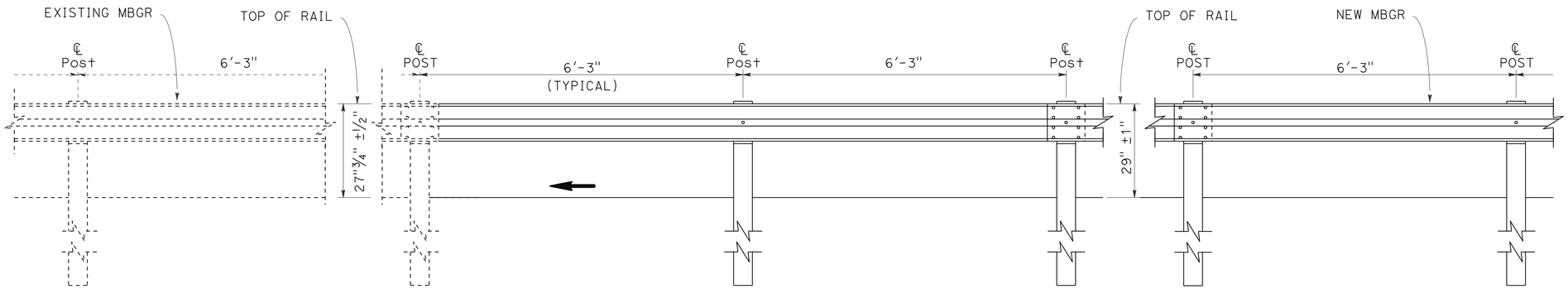

ELEVATION

METAL BEAM GUARD RAILING TRANSITION

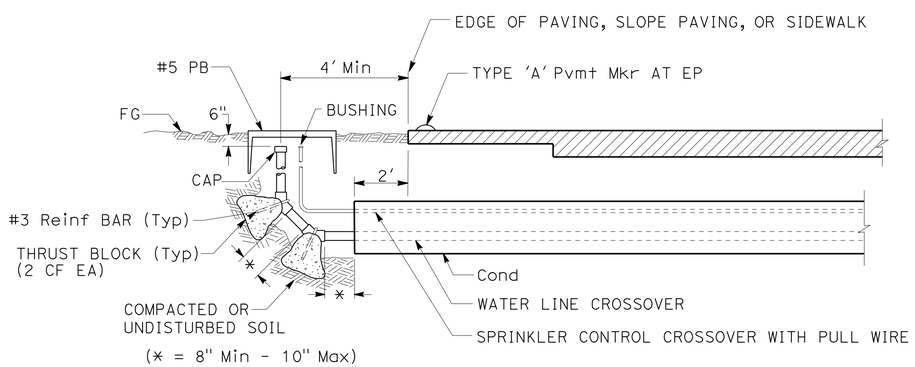

SECTION

IRRIGATION CROSSOVER

(MODIFIED)

THRUST BLOCK DETAIL

INSTALLATION	TYPE FITTING	PIPE SIZE						REMARKS
		2"	2½"	3"	4"	6"	8"	
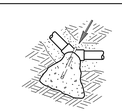	45°	0.04	0.08	0.1	0.1	0.2	0.3	REQUIRED BEARING AREA CUBIC YARD

CONSTRUCTION DETAILS

NO SCALE

C-10

STATE OF CALIFORNIA - DEPARTMENT OF TRANSPORTATION
Caltrans PROJECT DEVELOPMENT

FUNCTIONAL SUPERVISOR: ROGER CARLIN
CALCULATED-DESIGNED BY: WALDO R. LOPEZ
CHECKED BY: WALDO R. LOPEZ
REVISED BY
DATE REVISED

LAST REVISION 08-27-11
DATE PLOTTED => 09-DEC-2011
TIME PLOTTED => 11:24

Dist	COUNTY	ROUTE	POST MILES TOTAL PROJECT	SHEET No.	TOTAL SHEETS
11	SD	54,805	1.8,5.5/9.4	49	635

REGISTERED CIVIL ENGINEER 08-25-11 DATE

12-5-11
PLANS APPROVAL DATE

REGISTERED PROFESSIONAL ENGINEER WALDO LOPEZ No. C58085 Exp. 6-30-12 CIVIL STATE OF CALIFORNIA

THE STATE OF CALIFORNIA OR ITS OFFICERS OR AGENTS SHALL NOT BE RESPONSIBLE FOR THE ACCURACY OR COMPLETENESS OF SCANNED COPIES OF THIS PLAN SHEET.

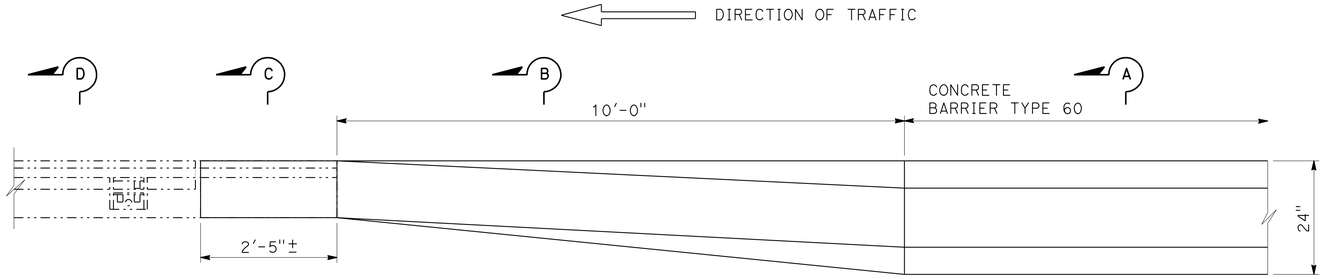

PLAN

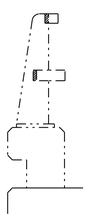

TYPE 9-11
SECTION D-D

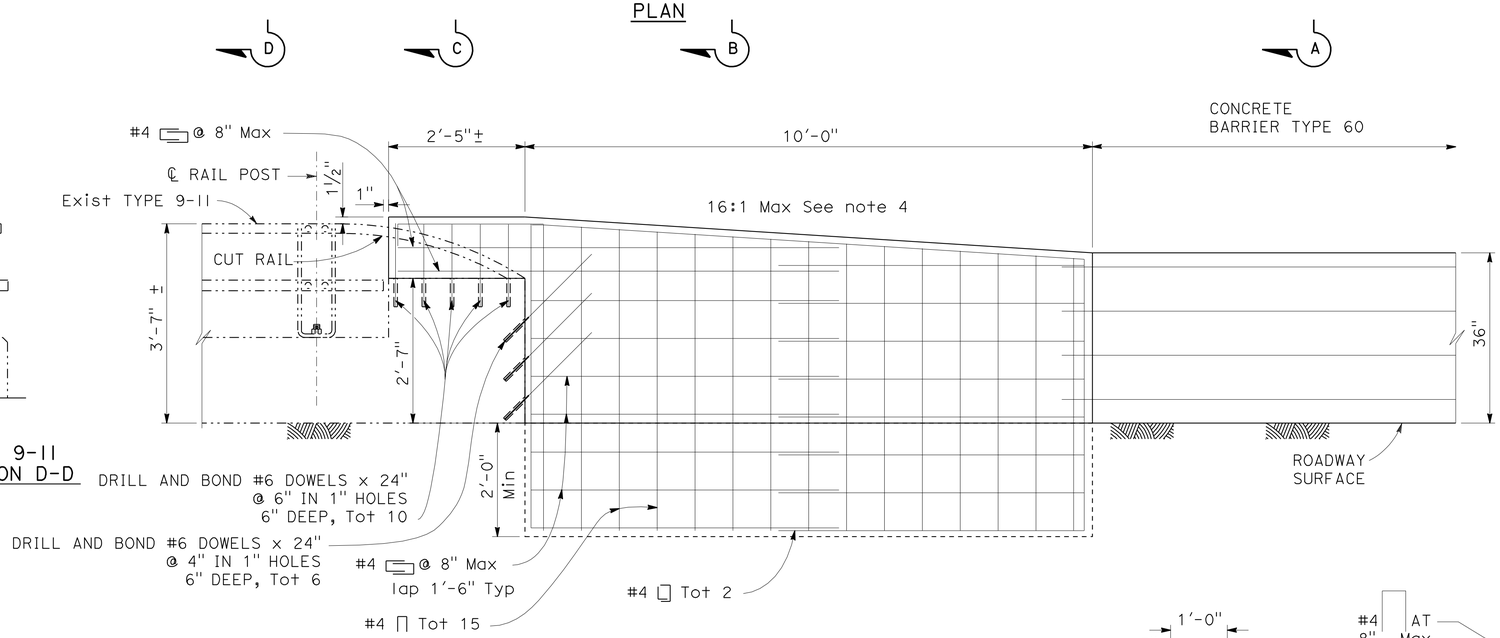

ELEVATION

EXISTING BARRIER RAILING CONNECTION TYPE 9-11

"A" LINE Sta 488+18.00 TO Sta 488+30.5

"A" LINE Sta 493+81.5 TO Sta 493+94.00

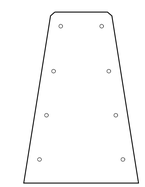

TYPE 60
CONCRETE BARRIER
SECTION A-A

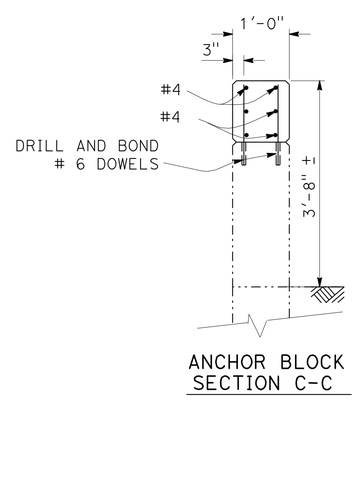

ANCHOR BLOCK
SECTION C-C

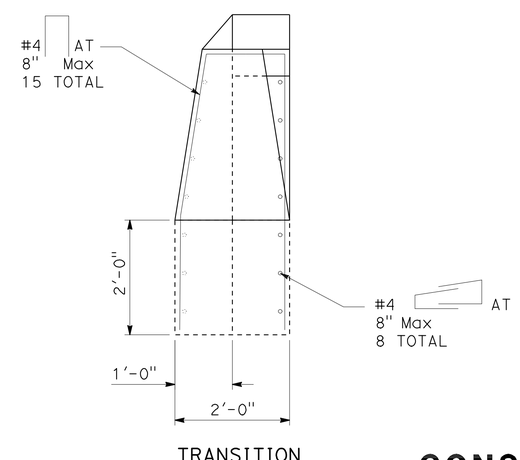

TRANSITION
SECTION B-B

1. FOR DETAILS NOT SHOWN, SEE STANDARD PLANS.
2. DEPENDANT DIMENSIONS WILL BE VERIFIED IN THE FIELD BEFORE FABRICATING ANY END CONNECTION TO CONFORM WITH EXISTING PAVED CONDITIONS.
3. CUT AND REMOVE THAT PORTION OF EXISTING TYPE 9-11.
4. TAPER THE TOP OF THE END OF THE TYPE 60 CONCRETE BARRIER AT 16:1 Max TO MATCH THE TOP ELEVATION OF THE BRIDGE RAILING.

CONSTRUCTION DETAILS

NO SCALE

C-11

STATE OF CALIFORNIA - DEPARTMENT OF TRANSPORTATION
Caltrans PROJECT DEVELOPMENT

FUNCTIONAL SUPERVISOR: ROGER CARLIN
CALCULATED-DESIGNED BY: WALDO R. LOPEZ
CHECKED BY: WALDO R. LOPEZ
REVISED BY
DATE REVISED

LAST REVISION 08-27-11
DATE PLOTTED => 09-DEC-2011
TIME PLOTTED => 11:24

Dist	COUNTY	ROUTE	POST MILES TOTAL PROJECT	SHEET No.	TOTAL SHEETS
11	SD	54,805	1.8,5.5/9.4	50	635

REGISTERED CIVIL ENGINEER 08-25-11 DATE

12-5-11
PLANS APPROVAL DATE

REGISTERED PROFESSIONAL ENGINEER WALDO LOPEZ No. C58085 Exp. 6-30-12 CIVIL STATE OF CALIFORNIA

THE STATE OF CALIFORNIA OR ITS OFFICERS OR AGENTS SHALL NOT BE RESPONSIBLE FOR THE ACCURACY OR COMPLETENESS OF SCANNED COPIES OF THIS PLAN SHEET.

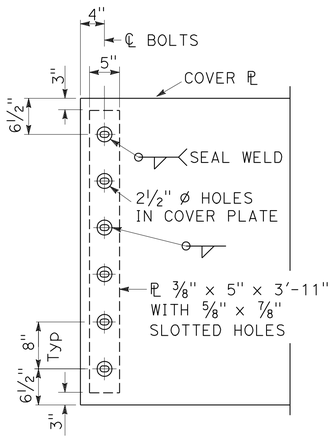

DETAIL F

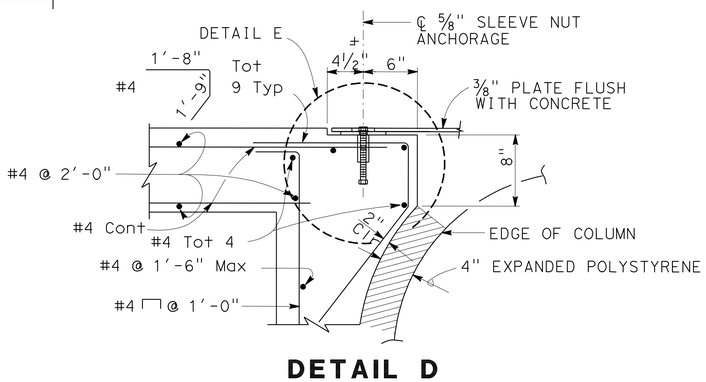

DETAIL D

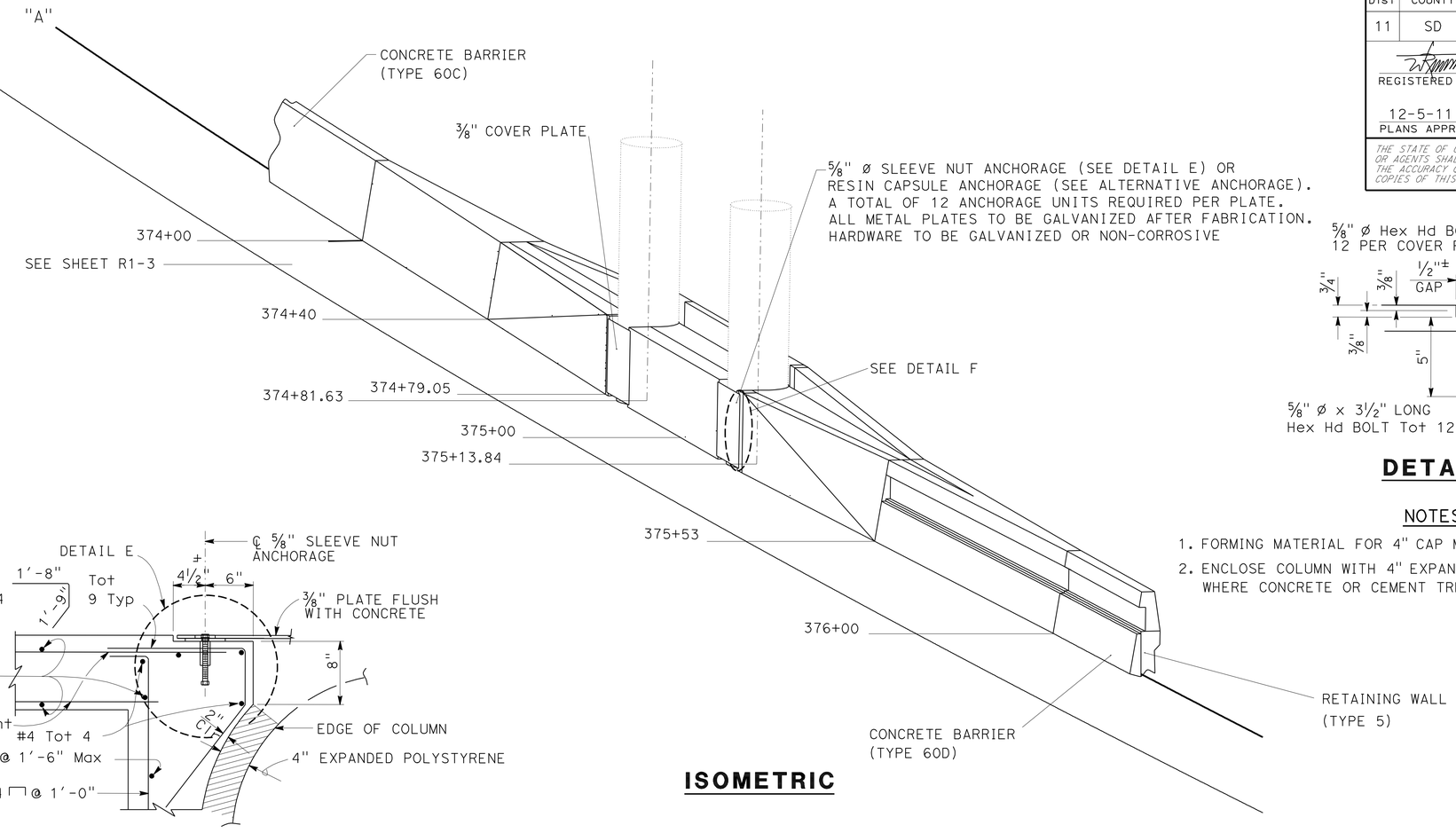

ISOMETRIC

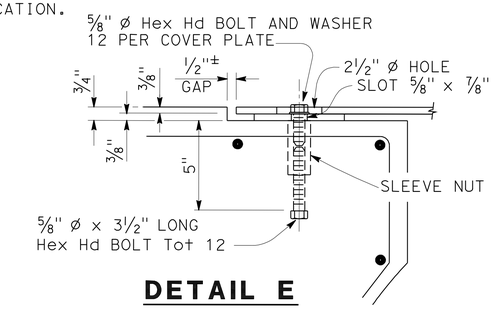

DETAIL E

NOTES:

1. FORMING MATERIAL FOR 4" CAP MAY REMAIN IN PLACE.
2. ENCLOSE COLUMN WITH 4" EXPANDED POLYSTYRENE AT LOCATIONS WHERE CONCRETE OR CEMENT TREATED BASE ENCASES THE COLUMN.

CONCRET BARRIER TYPE 60R4 TRANSITION AT BRIDGE COLUMN

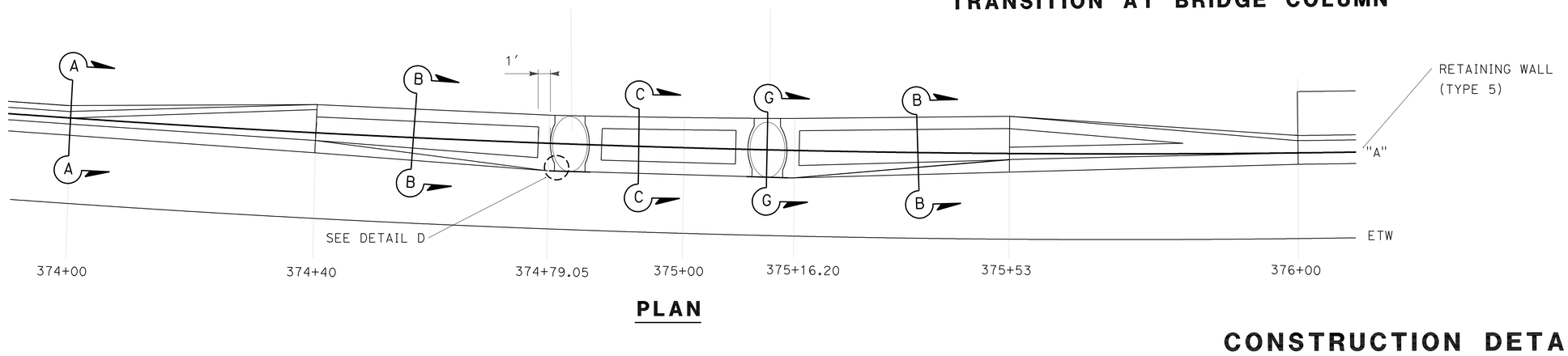

PLAN

CONSTRUCTION DETAIL

NO SCALE

C-12

REVISED BY	DATE REVISED
WALDO R. LOPEZ	WALDO R. LOPEZ

CALCULATED-DESIGNED BY | CHECKED BY

FUNCTIONAL SUPERVISOR: ROGER CARLIN

STATE OF CALIFORNIA - DEPARTMENT OF TRANSPORTATION
Caltrans PROJECT DEVELOPMENT

LAST REVISION 08-27-11 | DATE PLOTTED => 09-DEC-2011 | TIME PLOTTED => 11:24

Dist	COUNTY	ROUTE	POST MILES TOTAL PROJECT	SHEET No.	TOTAL SHEETS
11	SD	54,805	1.8,5.5/9.4	51	635

REGISTERED CIVIL ENGINEER 08-25-11 DATE

12-5-11
PLANS APPROVAL DATE

REGISTERED PROFESSIONAL ENGINEER WALDO LOPEZ No. C58085 Exp. 6-30-12 CIVIL STATE OF CALIFORNIA

THE STATE OF CALIFORNIA OR ITS OFFICERS OR AGENTS SHALL NOT BE RESPONSIBLE FOR THE ACCURACY OR COMPLETENESS OF SCANNED COPIES OF THIS PLAN SHEET.

1. USE TWO #4 REBARS AT 3" ABOVE THE LOWER ROADWAY SUFACE AND TWO #4 REBARS AT EVERY 8" INCREMENT VERTICAL SPACING ABOVE THE FIRST TWO #4 REBARS.

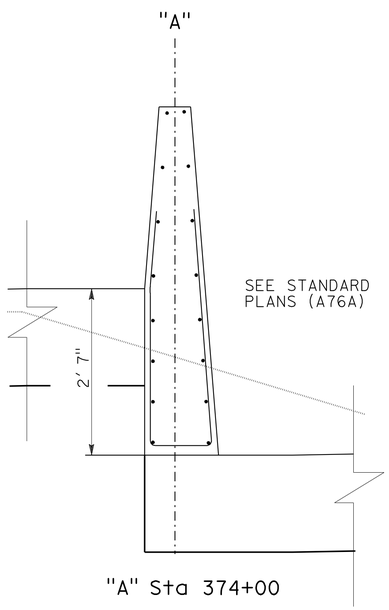

"A" Sta 374+00

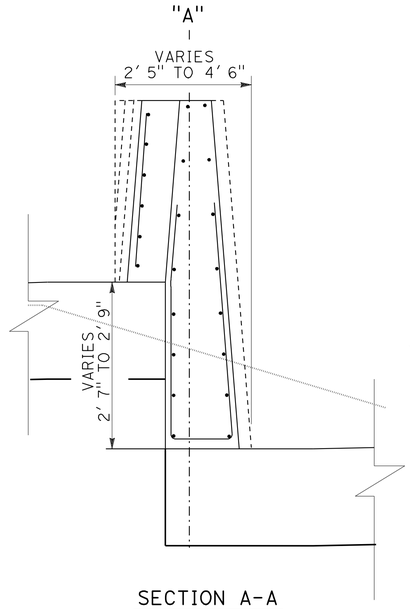

SECTION A-A

Sta 374+00 TO Sta 374+40.00

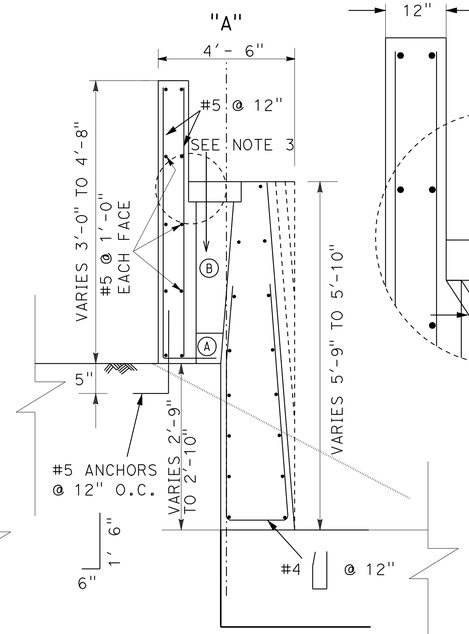

SECTION B-B

"A" Sta 374+40 TO Sta 374+78.05
"A" 375+17.20 TO Sta 375+53.00

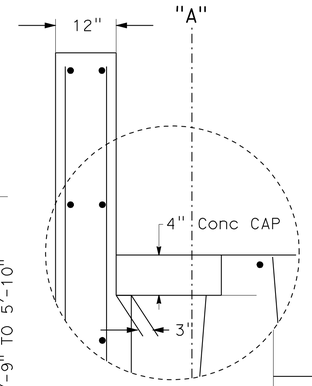

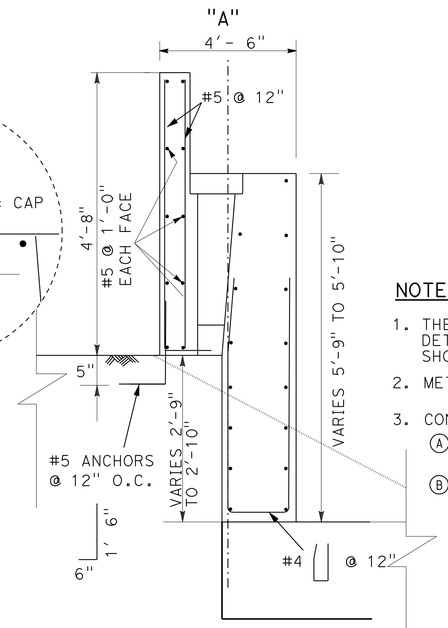

SECTION C-C

"A" 374+85.07 TO Sta 375+10.31

NOTES:

1. THESE DETAILS ARE TO BE COMBINED WITH SHEET R1-2 DETAILS NOT INCLUDED ARE SIMILAR TO THE DETAILS SHOWN ELSEWHERE ON SAID SHEET.
2. METAL PLATE DETAILS AT COLUMNS SHOWN ON SHEET R1-2.
3. CONTRACTOR OPTIONS FOR FILL BETWEEN BARRIER WALLS:
   - (A) PLACE 4" PCC AT BASE BETWEEN CONCRETE BARRIER WALLS.
   - (B) PLACE GRANULAR MATERIAL FROM BASE TO BOTTOM OF CONCRETE CAP.

CONCRET BARRIER TYPE 60R4 TRANSITION AT BRIDGE COLUMN

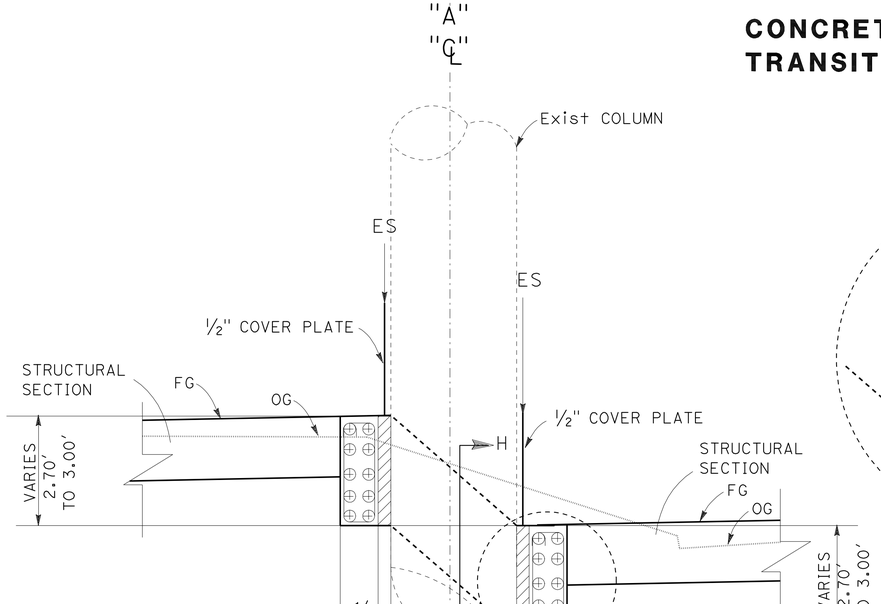

SECTION G - G

NO SCALE

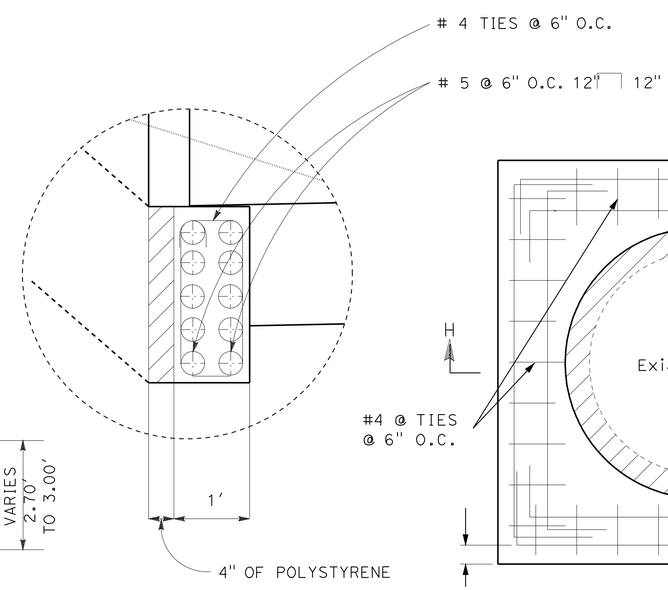

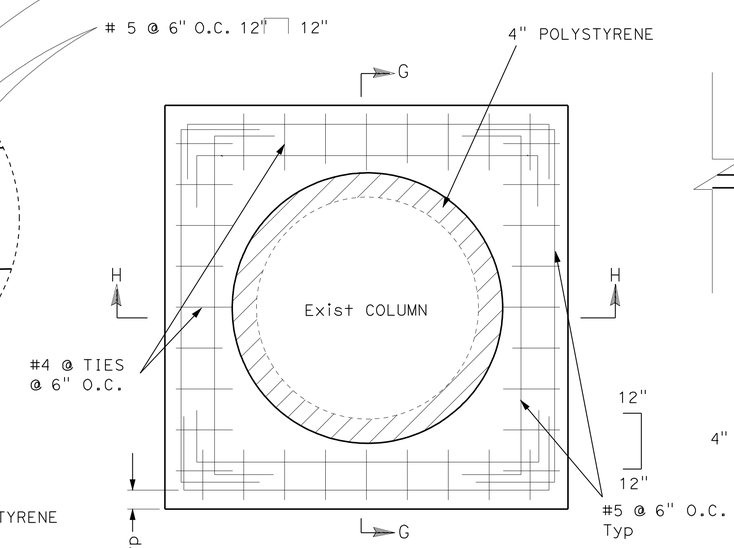

TYPICAL PLAN

NO SCALE

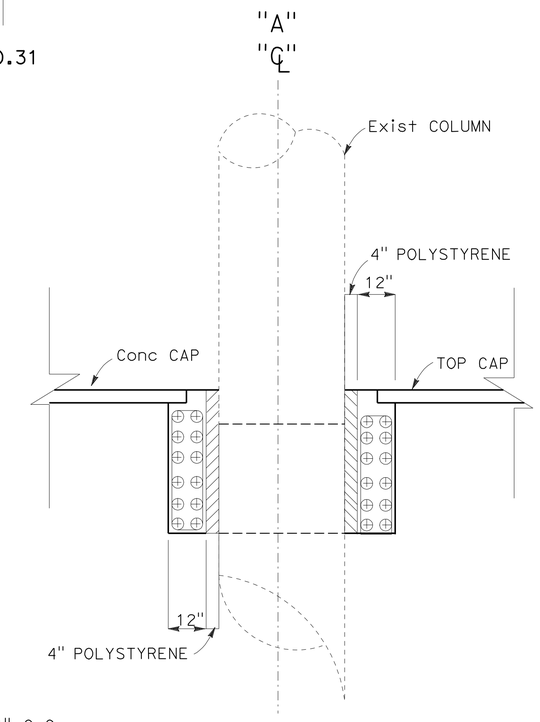

SECTION H - H

NO SCALE

CONSTRUCTION DETAIL

NO SCALE

C-13

STATE OF CALIFORNIA - DEPARTMENT OF TRANSPORTATION
Caltrans PROJECT DEVELOPMENT

FUNCTIONAL SUPERVISOR: ROGER CARLIN
CALCULATED-DESIGNED BY: WALDO R. LOPEZ
CHECKED BY: WALDO R. LOPEZ
REVISED BY
DATE REVISED

LAST REVISION 08-27-11 | DATE PLOTTED => 09-DEC-2011 | TIME PLOTTED => 11:25

Dist	COUNTY	ROUTE	POST MILES TOTAL PROJECT	SHEET No.	TOTAL SHEETS
11	SD	54,805	1.8,5.5/9.4	52	635

REGISTERED CIVIL ENGINEER 08-25-11 DATE

12-5-11
PLANS APPROVAL DATE

REGISTERED PROFESSIONAL ENGINEER WALDO LOPEZ No. C58085 Exp. 6-30-12 CIVIL STATE OF CALIFORNIA

THE STATE OF CALIFORNIA OR ITS OFFICERS OR AGENTS SHALL NOT BE RESPONSIBLE FOR THE ACCURACY OR COMPLETENESS OF SCANNED COPIES OF THIS PLAN SHEET.

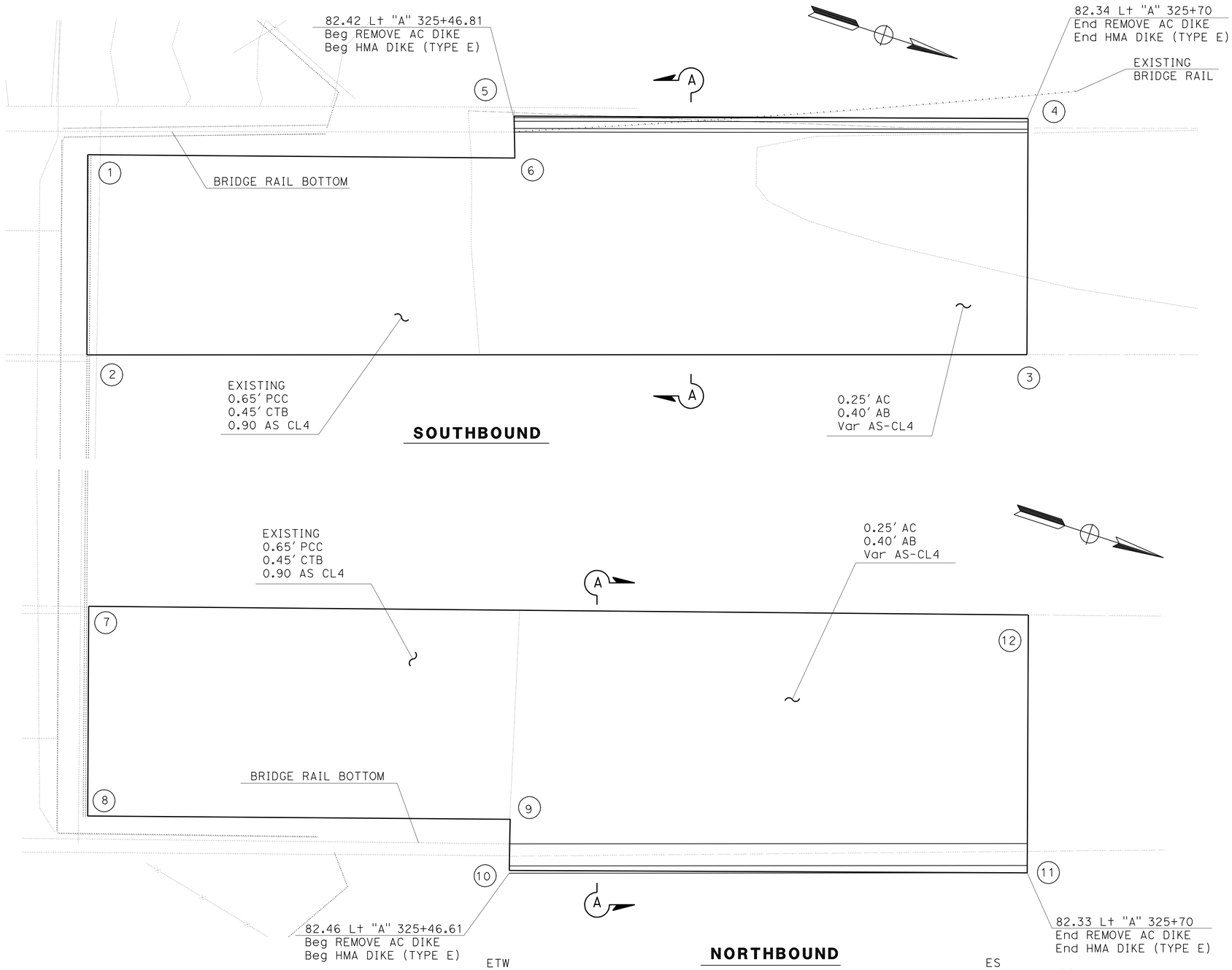

OUTSIDE JCPC SHOULDER "A" LINE Sta 327+50 TO Sta 325+70

LOCATION	STATION	OFFSET FROM "A" LINE	FG ELEVATION
1	325+27.5	79.96 Lt	MATCH EXISTING
2	325+27.5	70.63 Lt	320.74
3	325+70	70.85 Lt	MATCH EXISTING
4	325+70	82.34 Lt	MATCH EXISTING
5	325+46.81	82.42 Lt	320.41
6	325+46.81	79.91 Lt	320.45
7	325+27.5	70.82 Rt	320.79
8	325+27.5	79.97 Rt	MATCH EXISTING
9	325+46.61	80.02 Rt	320.45
10	325+46.61	82.46 Rt	320.40
11	325+70	82.33 Rt	MATCH EXISTING
12	325+70	70.90 Rt	MATCH EXISTING

SHOULDER ADJUSTMENT

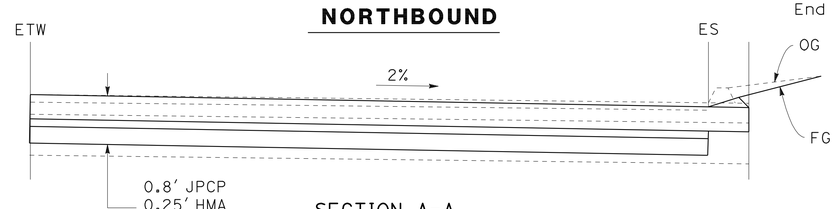

SECTION A-A

CONSTRUCTION DETAIL

NO SCALE

C-14

STATE OF CALIFORNIA - DEPARTMENT OF TRANSPORTATION
Caltrans PROJECT DEVELOPMENT

FUNCTIONAL SUPERVISOR: ROGER CARLIN
CALCULATED-DESIGNED BY: WALDO R. LOPEZ
CHECKED BY:
REVISED BY:
DATE REVISED:

LAST REVISION 08-27-11
DATE PLOTTED => 09-DEC-2011
TIME PLOTTED => 11:25

Dist	COUNTY	ROUTE	POST MILES TOTAL PROJECT	SHEET No.	TOTAL SHEETS
11	SD	54,805	1.8,5.5/9.4	53	635

REGISTERED CIVIL ENGINEER 08-25-11 DATE

12-5-11
PLANS APPROVAL DATE

REGISTERED PROFESSIONAL ENGINEER WALDO LOPEZ No. C58085 Exp. 6-30-12 CIVIL STATE OF CALIFORNIA

THE STATE OF CALIFORNIA OR ITS OFFICERS OR AGENTS SHALL NOT BE RESPONSIBLE FOR THE ACCURACY OR COMPLETENESS OF SCANNED COPIES OF THIS PLAN SHEET.

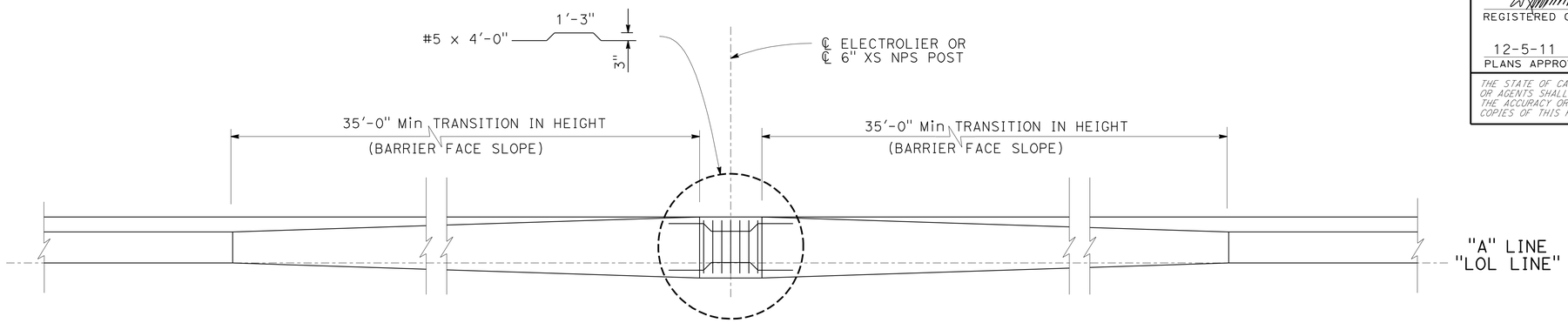

NOTE: ELECTROLIER AND BASE PLATE NOT SHOWN

PLAN

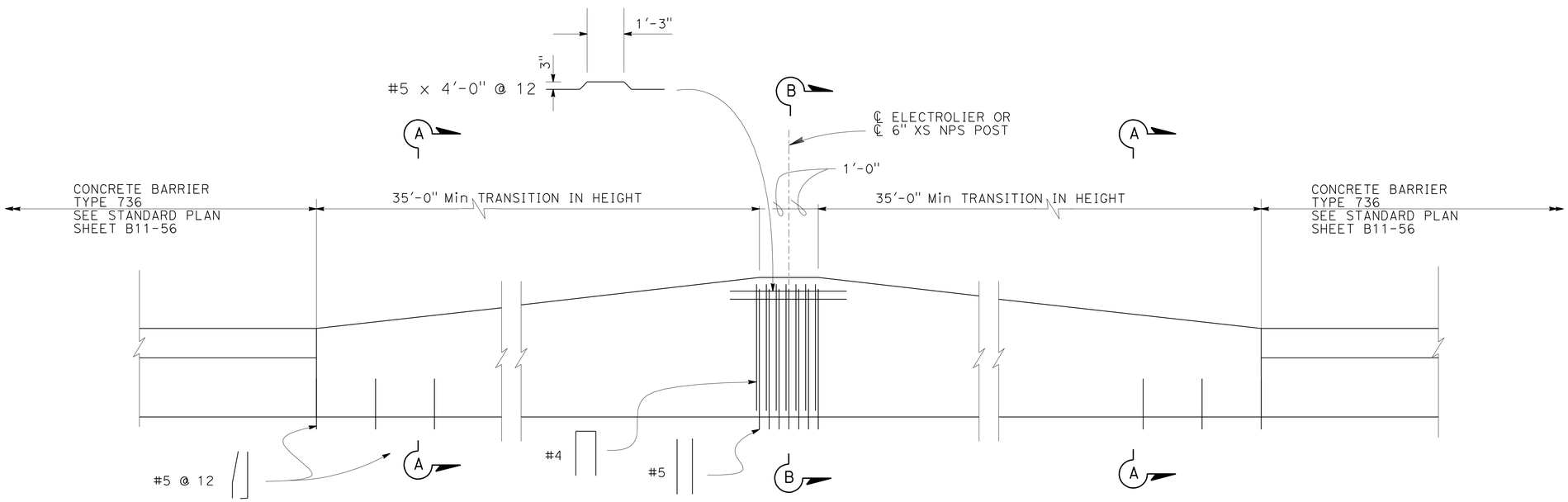

ELEVATION A76D

ELECTROLIER/ROADWAY SIGN, CONCRETE BARRIER TYPE 736 (Mod) DETAILS

CONSTRUCTION DETAILS

NO SCALE

C-15

STATE OF CALIFORNIA - DEPARTMENT OF TRANSPORTATION
Caltrans PROJECT DEVELOPMENT

FUNCTIONAL SUPERVISOR: ROGER CARLIN

CALCULATED-DESIGNED BY: WALDO R. LOPEZ
CHECKED BY: WALDO R. LOPEZ
REVISED BY
DATE REVISED

LAST REVISION 10-10-11
DATE PLOTTED => 09-DEC-2011
TIME PLOTTED => 11:25

Dist	COUNTY	ROUTE	POST MILES TOTAL PROJECT	SHEET No.	TOTAL SHEETS
11	SD	54,805	1.8,5.5/9.4	54	635

REGISTERED CIVIL ENGINEER 08-25-11 DATE

12-5-11
PLANS APPROVAL DATE

REGISTERED PROFESSIONAL ENGINEER
WALDO LOPEZ
No. C58085
Exp. 6-30-12
CIVIL
STATE OF CALIFORNIA

THE STATE OF CALIFORNIA OR ITS OFFICERS OR AGENTS SHALL NOT BE RESPONSIBLE FOR THE ACCURACY OR COMPLETENESS OF SCANNED COPIES OF THIS PLAN SHEET.

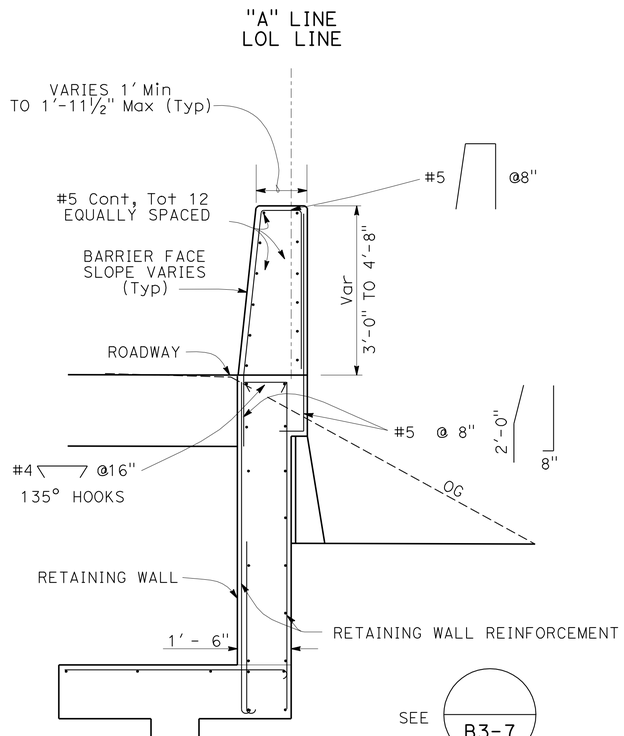

SECTION A-A

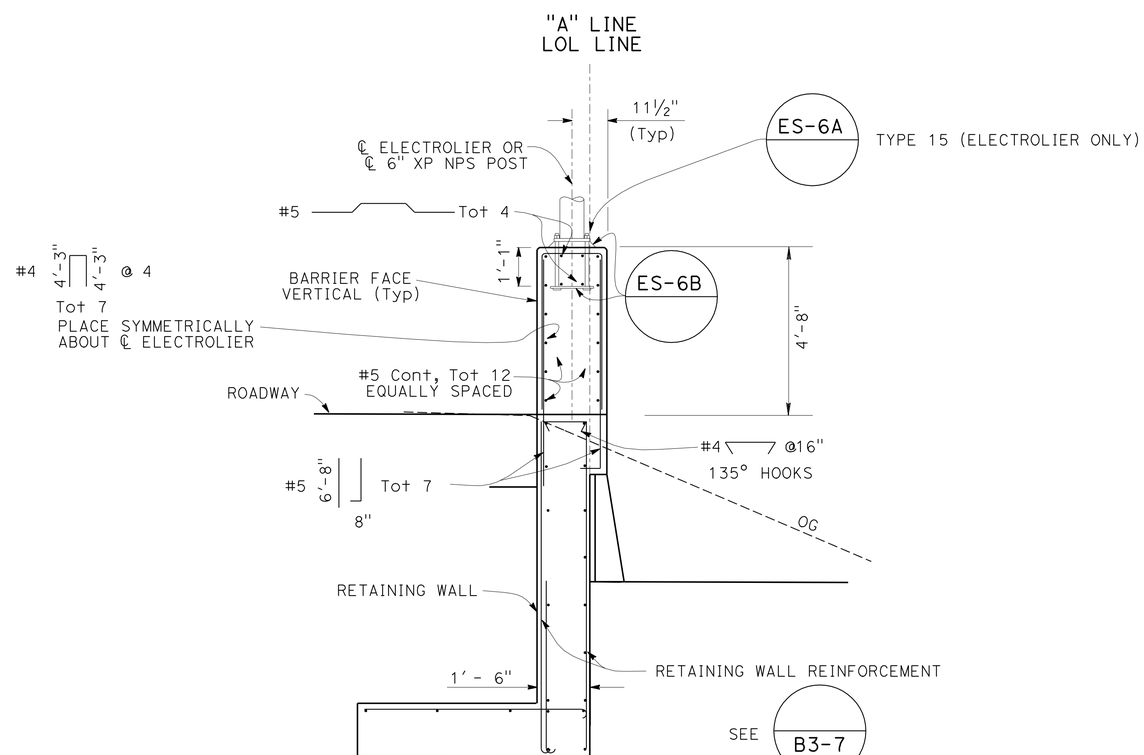

SECTION B-B

ELECTROLIER/ROADWAY SIGN, CONCRETE BARRIER TYPE 736 (Mod) DETAILS

CONSTRUCTION DETAILS

NO SCALE

C-16

REVISED BY	DATE REVISED
WALDO R. LOPEZ	WALDO R. LOPEZ

CALCULATED-DESIGNED BY / CHECKED BY

FUNCTIONAL SUPERVISOR: ROGER CARLIN

STATE OF CALIFORNIA - DEPARTMENT OF TRANSPORTATION
Caltrans PROJECT DEVELOPMENT

LAST REVISION 10-10-11 | DATE PLOTTED => 09-DEC-2011 | TIME PLOTTED => 11:25

Dist	COUNTY	ROUTE	POST MILES TOTAL PROJECT	SHEET No.	TOTAL SHEETS
11	SD	54,805	1.8,5.5/9.4	55	635

REGISTERED CIVIL ENGINEER 08-25-11 DATE

12-5-11
PLANS APPROVAL DATE

REGISTERED PROFESSIONAL ENGINEER WALDO LOPEZ No. C58085 Exp. 6-30-12 CIVIL STATE OF CALIFORNIA

THE STATE OF CALIFORNIA OR ITS OFFICERS OR AGENTS SHALL NOT BE RESPONSIBLE FOR THE ACCURACY OR COMPLETENESS OF SCANNED COPIES OF THIS PLAN SHEET.

NOTE:

FOR ACCURATE RIGHT OF WAY DATA, CONTACT RIGHT OF WAY ENGINEERING AT THE DISTRICT OFFICE.

LEGEND:

- TEMPORARY CONSTRUCTION ENTRANCE (TYPE 2)
- TFR — TEMPORARY FIBER ROLL
- TEMPORARY DRAINAGE INLET PROTECTION (TYPE 4A)
- TEMPORARY DRAINAGE INLET PROTECTION (TYPE 5)
- TEMPORARY DRAINAGE INLET PROTECTION (TYPE 3B)
- ESA — ENVIRONMENTALLY SENSITIVE AREA
- TEMPORARY HYDRAULIC MULCH
- TEMPORARY CHECK DAM (TYPE 1) 20' SPACING (LENGTH = 20' EACH)
- BIOFILTRATION SWALE FLOW LINE (SEE CONTOUR GRADING PLANS FOR DETAILS)

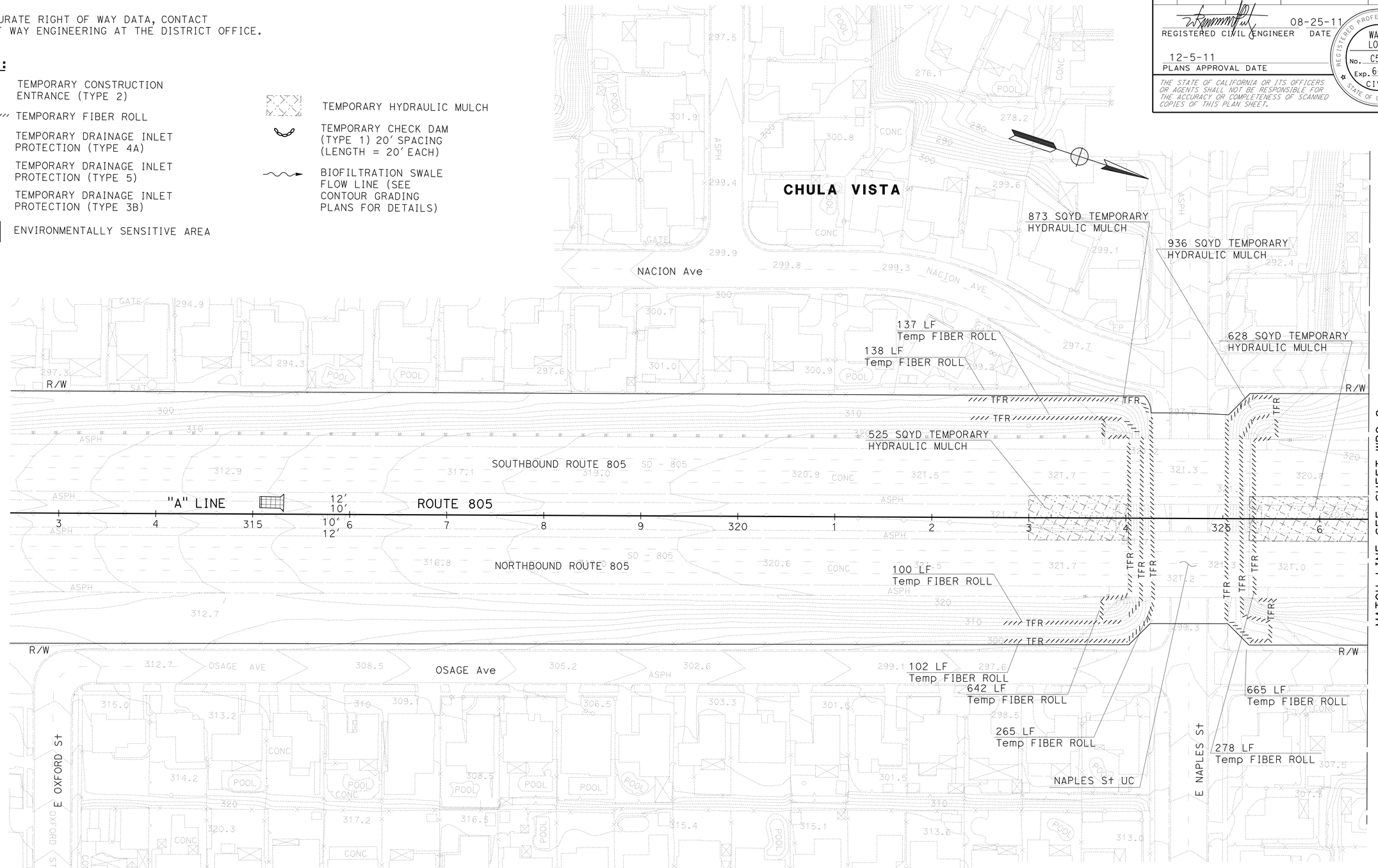

TEMPORARY WATER POLLUTION CONTROL PLAN
(STAGE 1)

SCALE: 1" = 50'

WPC-1

APPROVED FOR TEMPORARY WATER POLLUTION CONTROL WORK ONLY

STATE OF CALIFORNIA - DEPARTMENT OF TRANSPORTATION
Caltrans PROJECT DEVELOPMENT

FUNCTIONAL SUPERVISOR: ROGER CARLIN
CALCULATED-DESIGNED BY: WALDO R. LOPEZ
CHECKED BY:
REVISED BY:
DATE REVISED:

LAST REVISION 08-26-11
DATE PLOTTED => 09-DEC-2011
TIME PLOTTED => 11:25

Dist	COUNTY	ROUTE	POST MILES TOTAL PROJECT	SHEET No.	TOTAL SHEETS
11	SD	54,805	1.8,5.5/9.4	56	635

REGISTERED CIVIL ENGINEER 08-25-11 DATE

12-5-11
PLANS APPROVAL DATE

REGISTERED PROFESSIONAL ENGINEER WALDO LOPEZ No. C58085 Exp. 6-30-12 CIVIL STATE OF CALIFORNIA

THE STATE OF CALIFORNIA OR ITS OFFICERS OR AGENTS SHALL NOT BE RESPONSIBLE FOR THE ACCURACY OR COMPLETENESS OF SCANNED COPIES OF THIS PLAN SHEET.

NOTE:

FOR ACCURATE RIGHT OF WAY DATA, CONTACT RIGHT OF WAY ENGINEERING AT THE DISTRICT OFFICE.

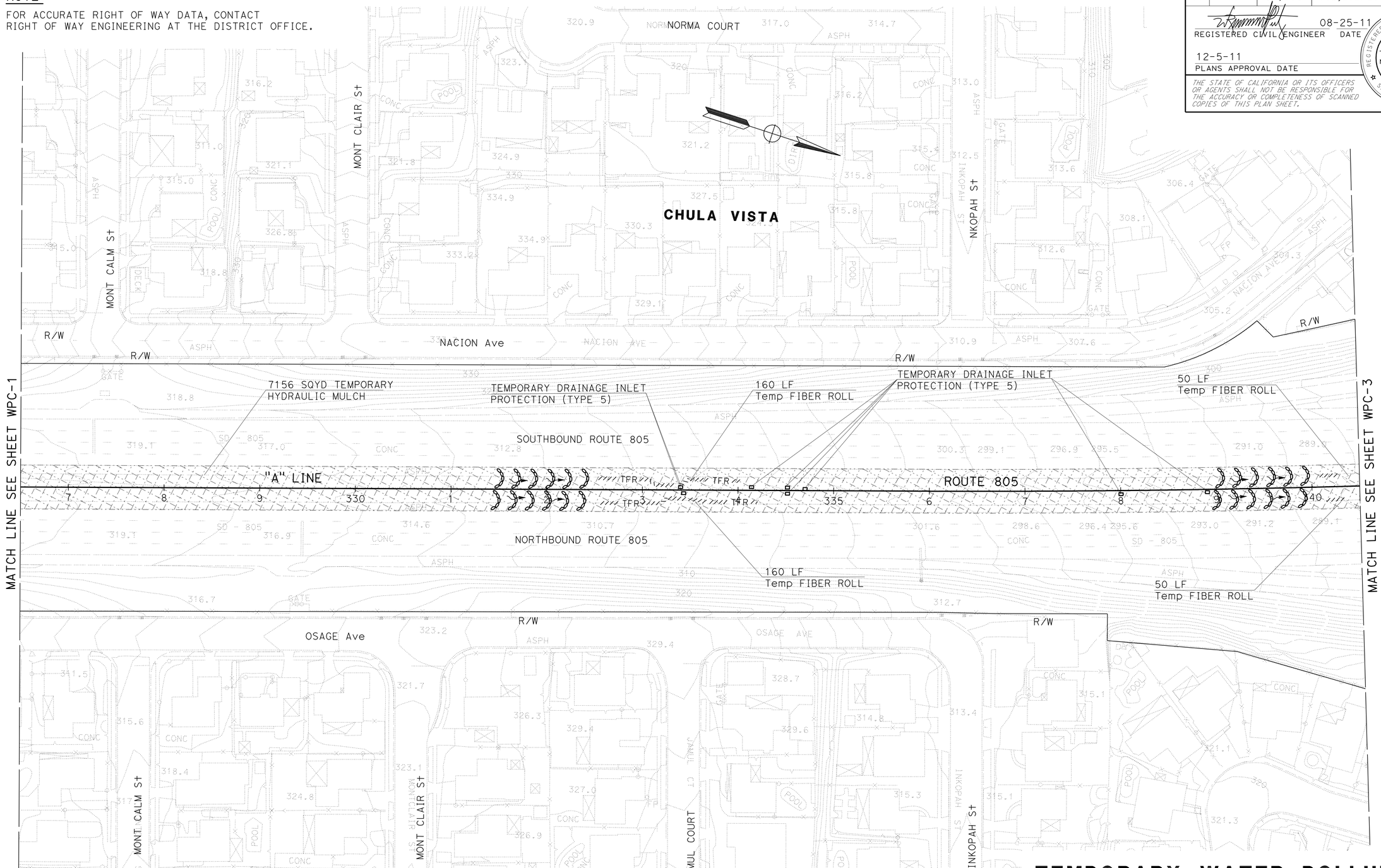

TEMPORARY WATER POLLUTION CONTROL PLAN
(STAGE 1)

SCALE: 1" = 50'

WPC-2

APPROVED FOR TEMPORARY WATER POLLUTION CONTROL WORK ONLY

STATE OF CALIFORNIA - DEPARTMENT OF TRANSPORTATION
Caltrans PROJECT DEVELOPMENT

FUNCTIONAL SUPERVISOR: ROGER CARLIN

CALCULATED-DESIGNED BY: WALDO R. LOPEZ
CHECKED BY: WALDO R. LOPEZ

REVISED BY
DATE REVISED

LAST REVISION 08-26-11
DATE PLOTTED => 09-DEC-2011
TIME PLOTTED => 10:23

Dist	COUNTY	ROUTE	POST MILES TOTAL PROJECT	SHEET No.	TOTAL SHEETS
11	SD	54,805	1.8,5.5/9.4	57	635

REGISTERED CIVIL ENGINEER 08-25-11 DATE

12-5-11
PLANS APPROVAL DATE

REGISTERED PROFESSIONAL ENGINEER WALDO LOPEZ No. C58085 Exp. 6-30-12 CIVIL STATE OF CALIFORNIA

THE STATE OF CALIFORNIA OR ITS OFFICERS OR AGENTS SHALL NOT BE RESPONSIBLE FOR THE ACCURACY OR COMPLETENESS OF SCANNED COPIES OF THIS PLAN SHEET.

NOTE:

FOR ACCURATE RIGHT OF WAY DATA, CONTACT RIGHT OF WAY ENGINEERING AT THE DISTRICT OFFICE.

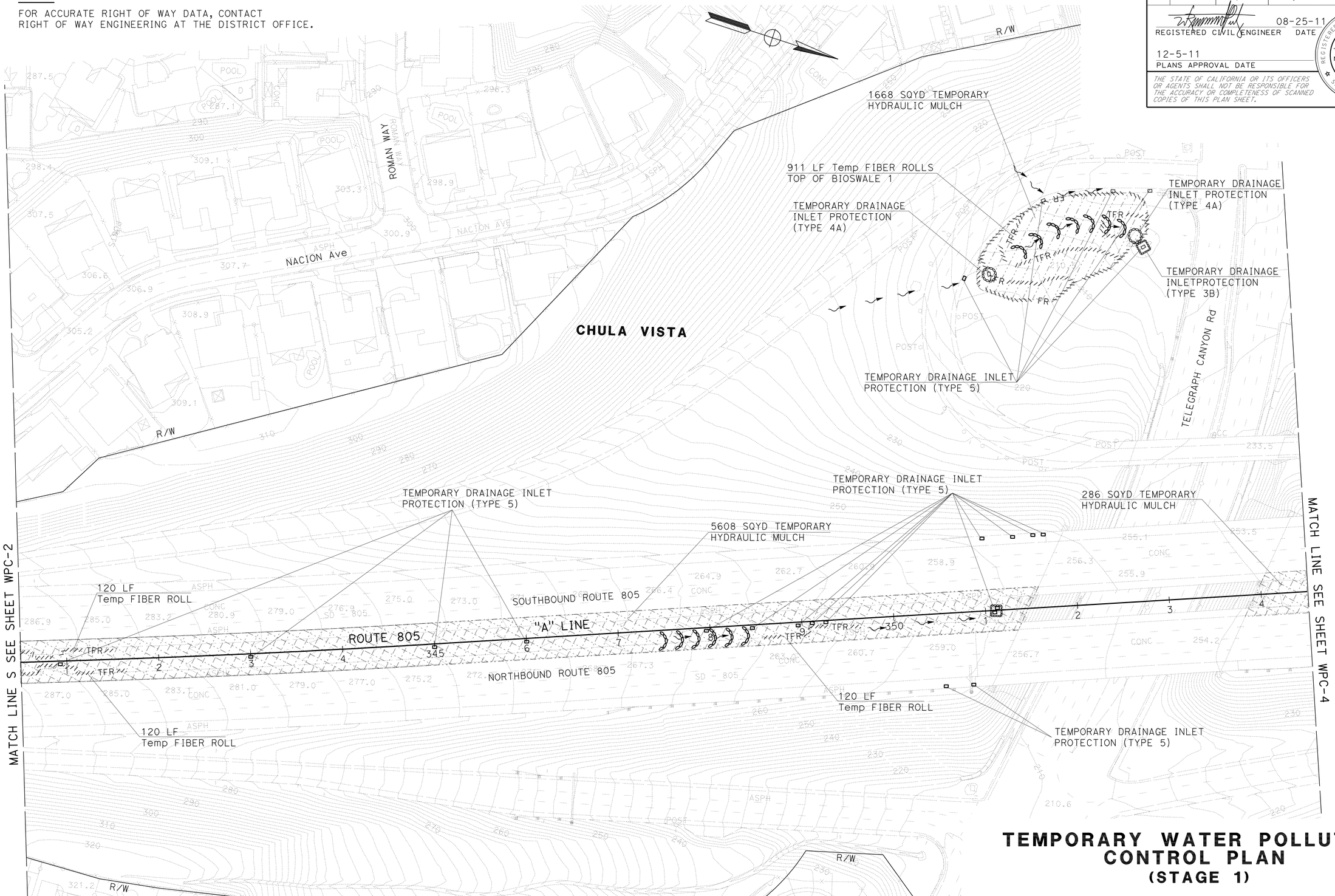

TEMPORARY WATER POLLUTION CONTROL PLAN
(STAGE 1)

SCALE: 1" = 50'

WPC-3

APPROVED FOR TEMPORARY WATER POLLUTION CONTROL WORK ONLY

STATE OF CALIFORNIA - DEPARTMENT OF TRANSPORTATION
Caltrans PROJECT DEVELOPMENT

FUNCTIONAL SUPERVISOR: ROGER CARLIN
CALCULATED-DESIGNED BY: WALDO R. LOPEZ
CHECKED BY: WALDO R. LOPEZ
REVISED BY
DATE REVISED

LAST REVISION 08-26-11 | DATE PLOTTED => 09-DEC-2011 | TIME PLOTTED => 10:23

Dist	COUNTY	ROUTE	POST MILES TOTAL PROJECT	SHEET No.	TOTAL SHEETS
11	SD	54,805	1.8,5.5/9.4	58	635

REGISTERED CIVIL ENGINEER 08-25-11 DATE

12-5-11
PLANS APPROVAL DATE

REGISTERED PROFESSIONAL ENGINEER WALDO LOPEZ No. C58085 Exp. 6-30-12 CIVIL STATE OF CALIFORNIA

THE STATE OF CALIFORNIA OR ITS OFFICERS OR AGENTS SHALL NOT BE RESPONSIBLE FOR THE ACCURACY OR COMPLETENESS OF SCANNED COPIES OF THIS PLAN SHEET.

NOTE:

FOR ACCURATE RIGHT OF WAY DATA, CONTACT RIGHT OF WAY ENGINEERING AT THE DISTRICT OFFICE.

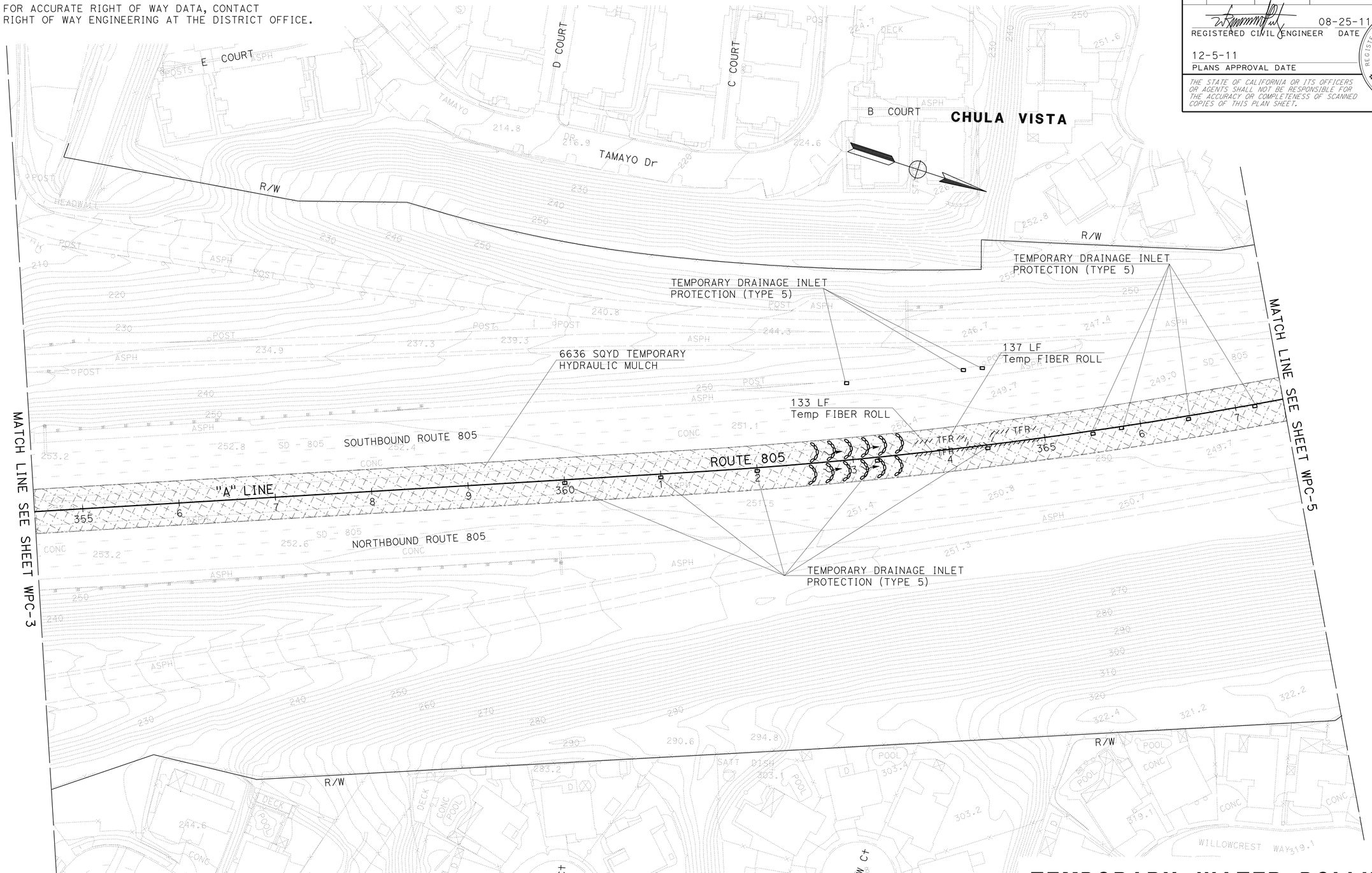

TEMPORARY WATER POLLUTION CONTROL PLAN
(STAGE 1)

SCALE: 1" = 50'

WPC-4

APPROVED FOR TEMPORARY WATER POLLUTION CONTROL WORK ONLY

STATE OF CALIFORNIA - DEPARTMENT OF TRANSPORTATION
Caltrans PROJECT DEVELOPMENT

FUNCTIONAL SUPERVISOR: ROGER CARLIN
CALCULATED-DESIGNED BY: WALDO R. LOPEZ
CHECKED BY: WALDO R. LOPEZ
REVISED BY
DATE REVISED

LAST REVISION DATE PLOTTED => 09-DEC-2011
08-26-11 TIME PLOTTED => 10:23

Dist	COUNTY	ROUTE	POST MILES TOTAL PROJECT	SHEET No.	TOTAL SHEETS
11	SD	54,805	1.8,5.5/9.4	59	635

REGISTERED CIVIL ENGINEER 08-25-11 DATE

12-5-11
PLANS APPROVAL DATE

REGISTERED PROFESSIONAL ENGINEER WALDO LOPEZ No. C58085 Exp. 6-30-12 CIVIL STATE OF CALIFORNIA

THE STATE OF CALIFORNIA OR ITS OFFICERS OR AGENTS SHALL NOT BE RESPONSIBLE FOR THE ACCURACY OR COMPLETENESS OF SCANNED COPIES OF THIS PLAN SHEET.

NOTE:

FOR ACCURATE RIGHT OF WAY DATA, CONTACT RIGHT OF WAY ENGINEERING AT THE DISTRICT OFFICE.

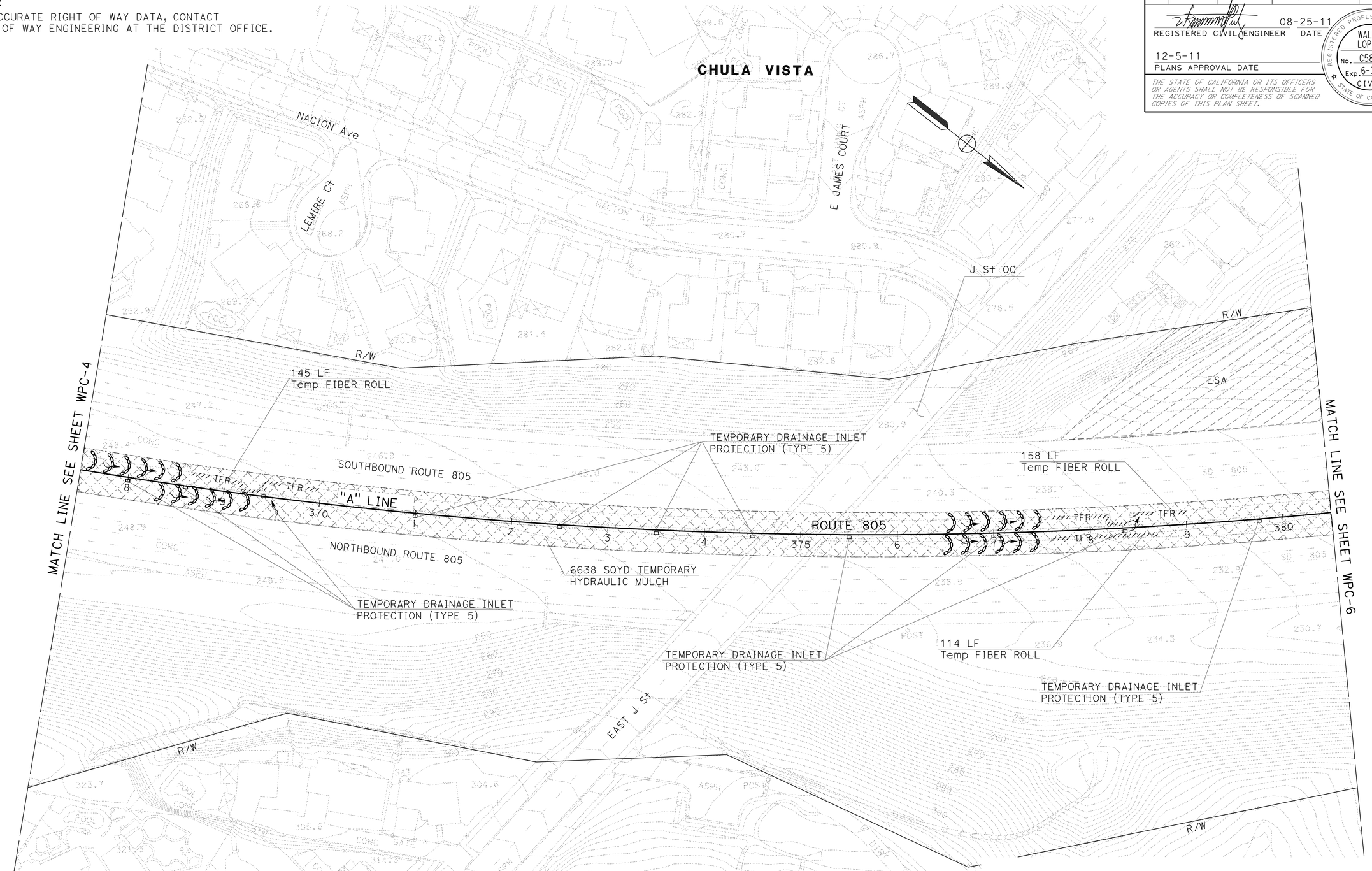

APPROVED FOR TEMPORARY WATER POLLUTION CONTROL WORK ONLY

TEMPORARY WATER POLLUTION CONTROL PLAN
(STAGE 1)

SCALE: 1" = 50'

WPC-5

STATE OF CALIFORNIA - DEPARTMENT OF TRANSPORTATION
Caltrans PROJECT DEVELOPMENT

FUNCTIONAL SUPERVISOR: ROGER CARLIN

CALCULATED-DESIGNED BY: WALDO R. LOPEZ
CHECKED BY: WALDO R. LOPEZ

REVISED BY
DATE REVISED

LAST REVISION DATE PLOTTED => 09-DEC-2011
08-26-11 TIME PLOTTED => 10:23

Dist	COUNTY	ROUTE	POST MILES TOTAL PROJECT	SHEET No.	TOTAL SHEETS
11	SD	54,805	1.8,5.5/9.4	60	635

REGISTERED CIVIL ENGINEER 08-25-11 DATE

12-5-11
PLANS APPROVAL DATE

REGISTERED PROFESSIONAL ENGINEER WALDO LOPEZ No. C58085 Exp. 6-30-12 CIVIL STATE OF CALIFORNIA

THE STATE OF CALIFORNIA OR ITS OFFICERS OR AGENTS SHALL NOT BE RESPONSIBLE FOR THE ACCURACY OR COMPLETENESS OF SCANNED COPIES OF THIS PLAN SHEET.

NOTE:

FOR ACCURATE RIGHT OF WAY DATA, CONTACT RIGHT OF WAY ENGINEERING AT THE DISTRICT OFFICE.

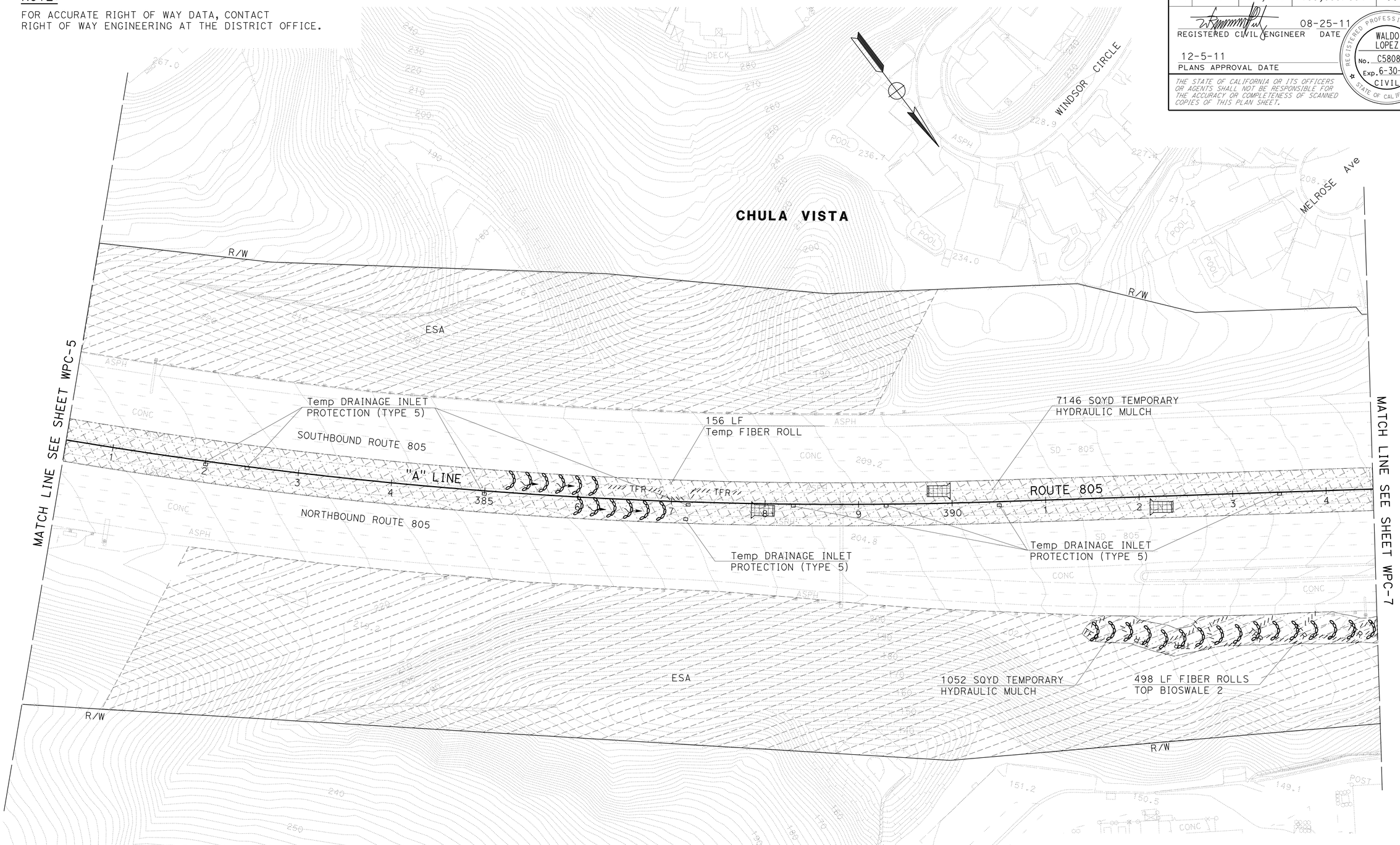

TEMPORARY WATER POLLUTION CONTROL PLAN
(STAGE 1)

SCALE: 1" = 50'

WPC-6

APPROVED FOR TEMPORARY WATER POLLUTION CONTROL WORK ONLY

STATE OF CALIFORNIA - DEPARTMENT OF TRANSPORTATION
Caltrans PROJECT DEVELOPMENT

FUNCTIONAL SUPERVISOR: ROGER CARLIN

CALCULATED-DESIGNED BY: WALDO R. LOPEZ
CHECKED BY: WALDO R. LOPEZ

REVISED BY
DATE REVISED

LAST REVISION 08-26-11
DATE PLOTTED => 09-DEC-2011
TIME PLOTTED => 10:23

Dist	COUNTY	ROUTE	POST MILES TOTAL PROJECT	SHEET No.	TOTAL SHEETS
11	SD	54,805	1.8,5.5/9.4	61	635

REGISTERED CIVIL ENGINEER 08-25-11 DATE

12-5-11
PLANS APPROVAL DATE

REGISTERED PROFESSIONAL ENGINEER WALDO LOPEZ No. C58085 Exp. 6-30-12 CIVIL STATE OF CALIFORNIA

THE STATE OF CALIFORNIA OR ITS OFFICERS OR AGENTS SHALL NOT BE RESPONSIBLE FOR THE ACCURACY OR COMPLETENESS OF SCANNED COPIES OF THIS PLAN SHEET.

NOTE:

FOR ACCURATE RIGHT OF WAY DATA, CONTACT RIGHT OF WAY ENGINEERING AT THE DISTRICT OFFICE.

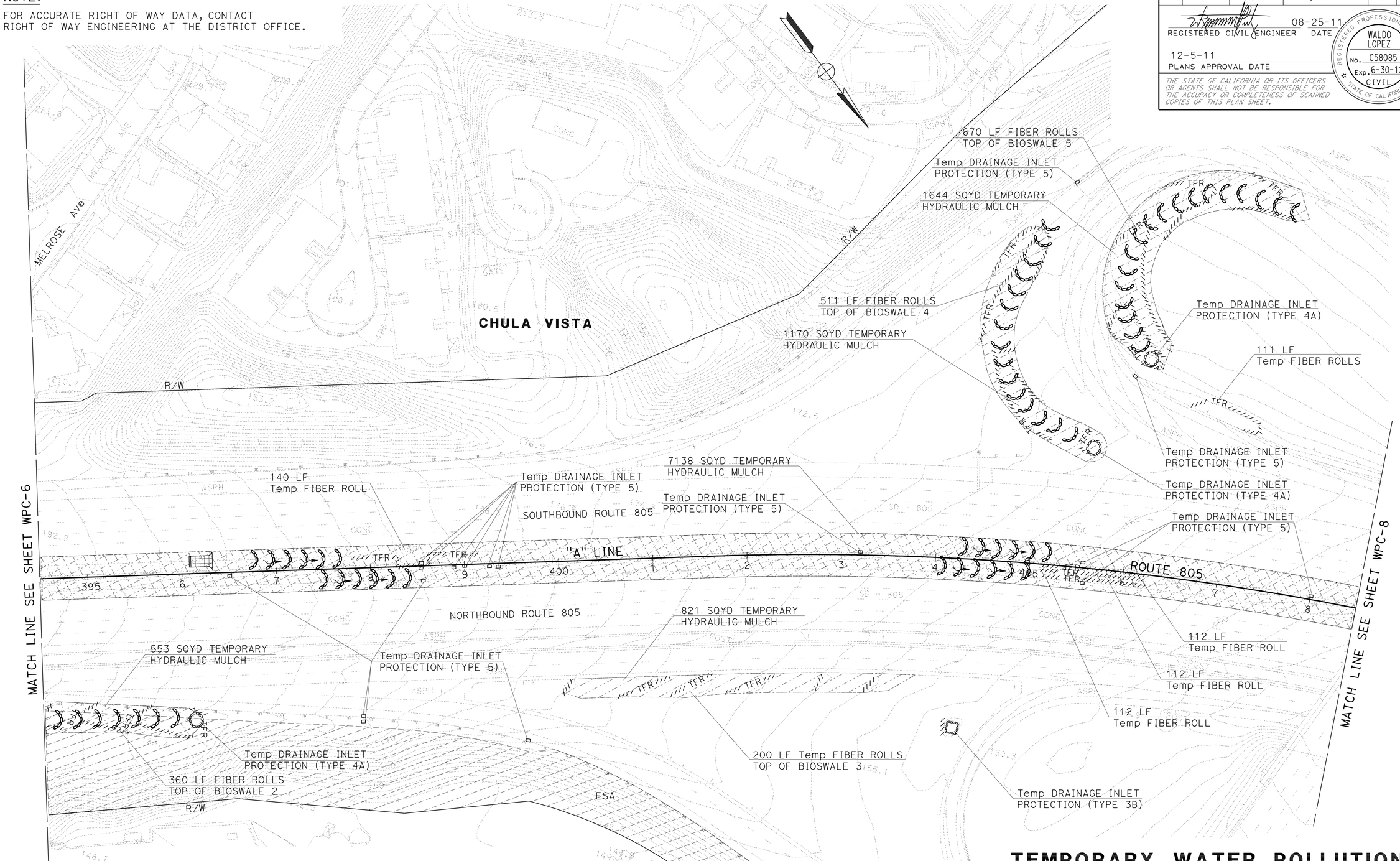

TEMPORARY WATER POLLUTION CONTROL PLAN
(STAGE 1)

SCALE: 1" = 50'

WPC-7

APPROVED FOR TEMPORARY WATER POLLUTION CONTROL WORK ONLY

STATE OF CALIFORNIA - DEPARTMENT OF TRANSPORTATION
Caltrans PROJECT DEVELOPMENT

FUNCTIONAL SUPERVISOR: ROGER CARLIN

CALCULATED-DESIGNED BY: WALDO R. LOPEZ
CHECKED BY: WALDO R. LOPEZ
REVISED BY
DATE REVISED

LAST REVISION 08-26-11
DATE PLOTTED => 09-DEC-2011
TIME PLOTTED => 10:23

Dist	COUNTY	ROUTE	POST MILES TOTAL PROJECT	SHEET No.	TOTAL SHEETS
11	SD	54,805	1.8,5.5/9.4	62	635

REGISTERED CIVIL ENGINEER 08-25-11 DATE

12-5-11
PLANS APPROVAL DATE

REGISTERED PROFESSIONAL ENGINEER WALDO LOPEZ No. C58085 Exp. 6-30-12 CIVIL STATE OF CALIFORNIA

THE STATE OF CALIFORNIA OR ITS OFFICERS OR AGENTS SHALL NOT BE RESPONSIBLE FOR THE ACCURACY OR COMPLETENESS OF SCANNED COPIES OF THIS PLAN SHEET.

NOTE:

FOR ACCURATE RIGHT OF WAY DATA, CONTACT RIGHT OF WAY ENGINEERING AT THE DISTRICT OFFICE.

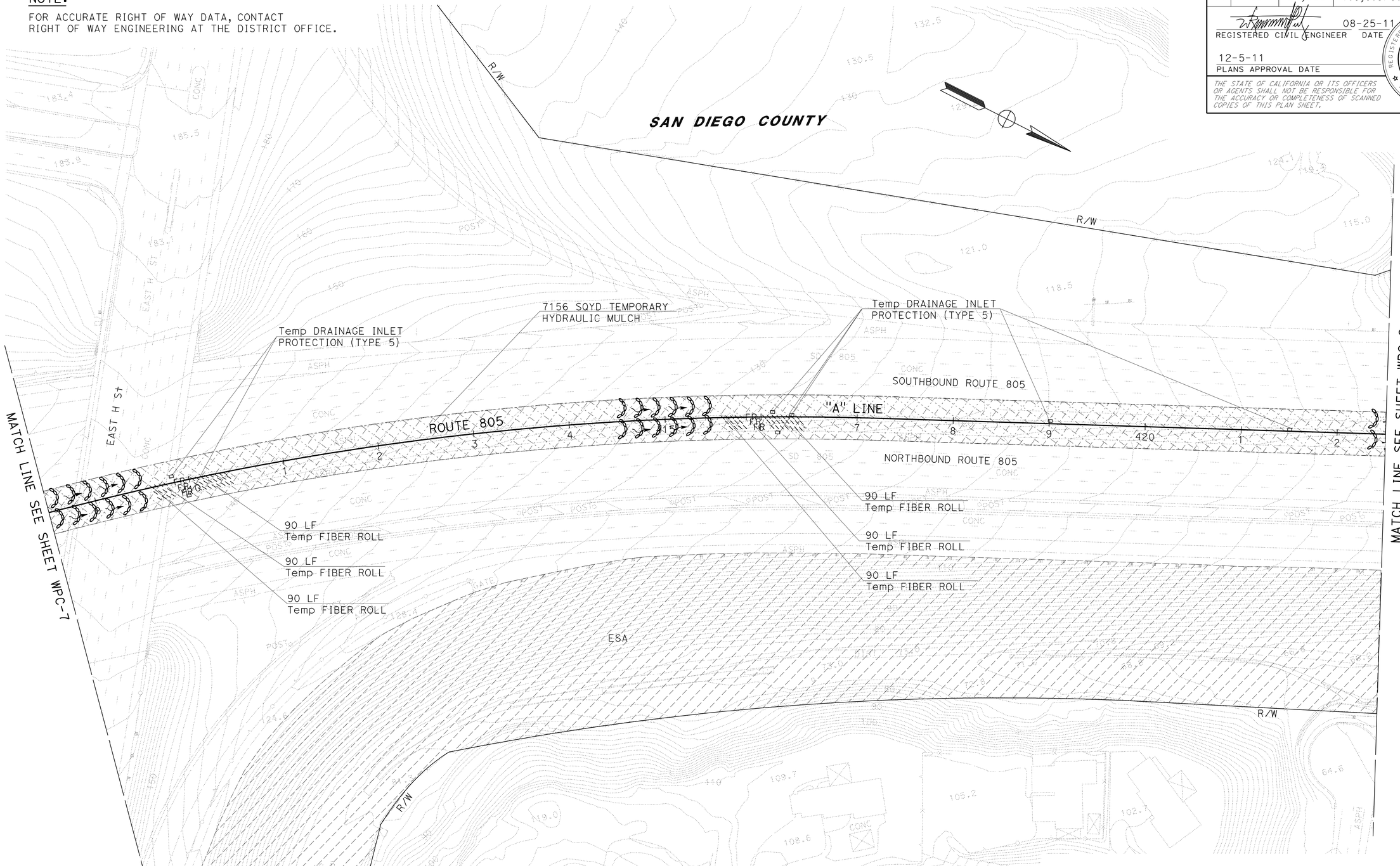

TEMPORARY WATER POLLUTION CONTROL PLAN (STAGE 2)

SCALE: 1" = 50'

WPC-8

APPROVED FOR TEMPORARY WATER POLLUTION CONTROL WORK ONLY

STATE OF CALIFORNIA - DEPARTMENT OF TRANSPORTATION
Caltrans PROJECT DEVELOPMENT

FUNCTIONAL SUPERVISOR: ROGER CARLIN

CALCULATED-DESIGNED BY: WALDO R. LOPEZ
CHECKED BY: WALDO R. LOPEZ

REVISED BY
DATE REVISED

LAST REVISION DATE PLOTTED => 09-DEC-2011
08-26-11 TIME PLOTTED => 10:23

Dist	COUNTY	ROUTE	POST MILES TOTAL PROJECT	SHEET No.	TOTAL SHEETS
11	SD	54,805	1.8,5.5/9.4	63	635

REGISTERED CIVIL ENGINEER 08-25-11 DATE

12-5-11
PLANS APPROVAL DATE

REGISTERED PROFESSIONAL ENGINEER WALDO LOPEZ No. C58085 Exp. 6-30-12 CIVIL STATE OF CALIFORNIA

THE STATE OF CALIFORNIA OR ITS OFFICERS OR AGENTS SHALL NOT BE RESPONSIBLE FOR THE ACCURACY OR COMPLETENESS OF SCANNED COPIES OF THIS PLAN SHEET.

NOTE:

FOR ACCURATE RIGHT OF WAY DATA, CONTACT RIGHT OF WAY ENGINEERING AT THE DISTRICT OFFICE.

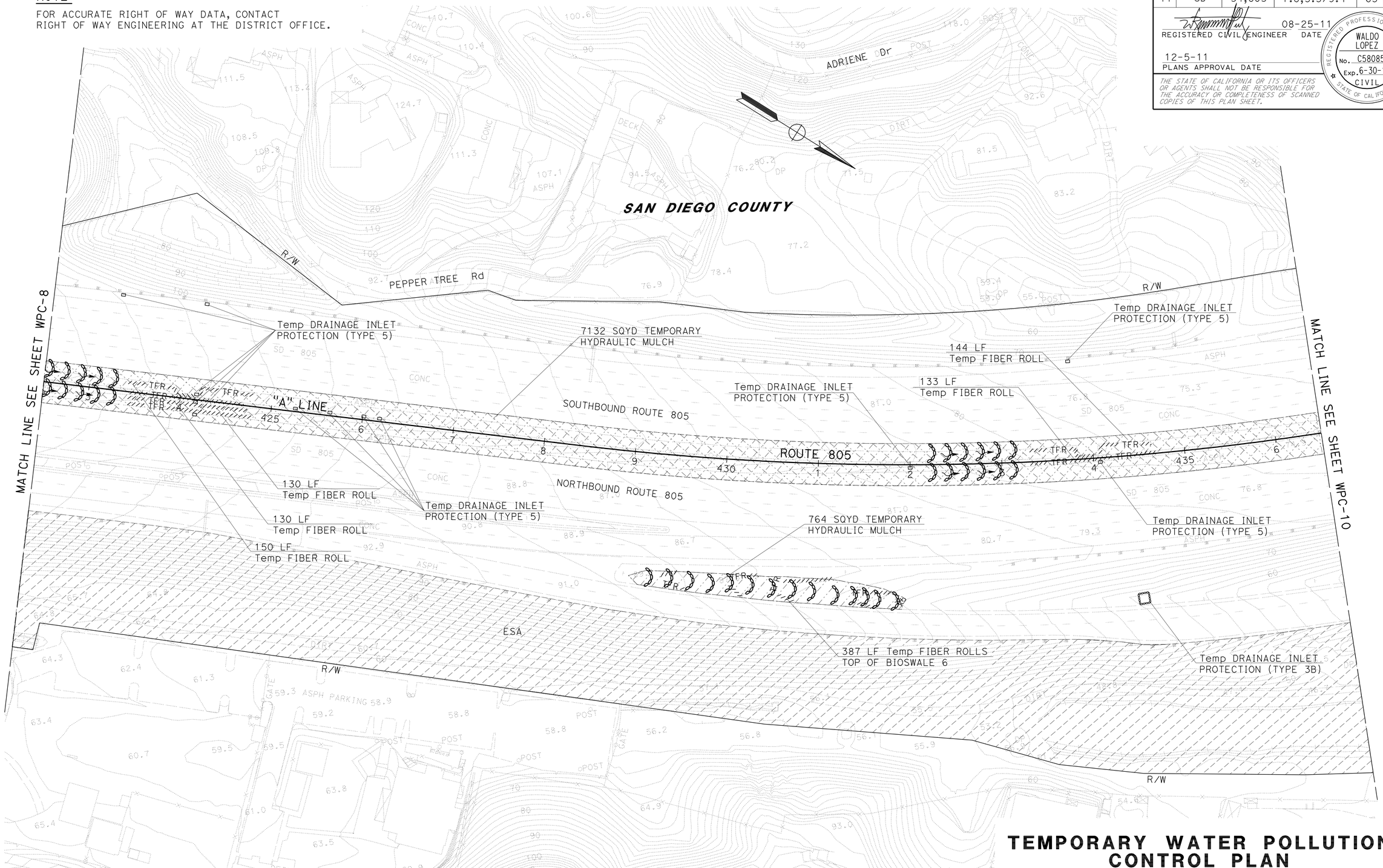

TEMPORARY WATER POLLUTION CONTROL PLAN
(STAGE 2)

SCALE: 1" = 50'

WPC-9

APPROVED FOR TEMPORARY WATER POLLUTION CONTROL WORK ONLY

STATE OF CALIFORNIA - DEPARTMENT OF TRANSPORTATION
Caltrans PROJECT DEVELOPMENT

FUNCTIONAL SUPERVISOR: ROGER CARLIN

CALCULATED-DESIGNED BY: WALDO R. LOPEZ
CHECKED BY: WALDO R. LOPEZ
REVISED BY
DATE REVISED

LAST REVISION 08-26-11
DATE PLOTTED => 09-DEC-2011
TIME PLOTTED => 10:23

Dist	COUNTY	ROUTE	POST MILES TOTAL PROJECT	SHEET No.	TOTAL SHEETS
11	SD	54,805	1.8,5.5/9.4	64	635

REGISTERED CIVIL ENGINEER 08-25-11 DATE

12-5-11
PLANS APPROVAL DATE

REGISTERED PROFESSIONAL ENGINEER WALDO LOPEZ No. C58085 Exp. 6-30-12 CIVIL STATE OF CALIFORNIA

THE STATE OF CALIFORNIA OR ITS OFFICERS OR AGENTS SHALL NOT BE RESPONSIBLE FOR THE ACCURACY OR COMPLETENESS OF SCANNED COPIES OF THIS PLAN SHEET.

NOTE:

FOR ACCURATE RIGHT OF WAY DATA, CONTACT RIGHT OF WAY ENGINEERING AT THE DISTRICT OFFICE.

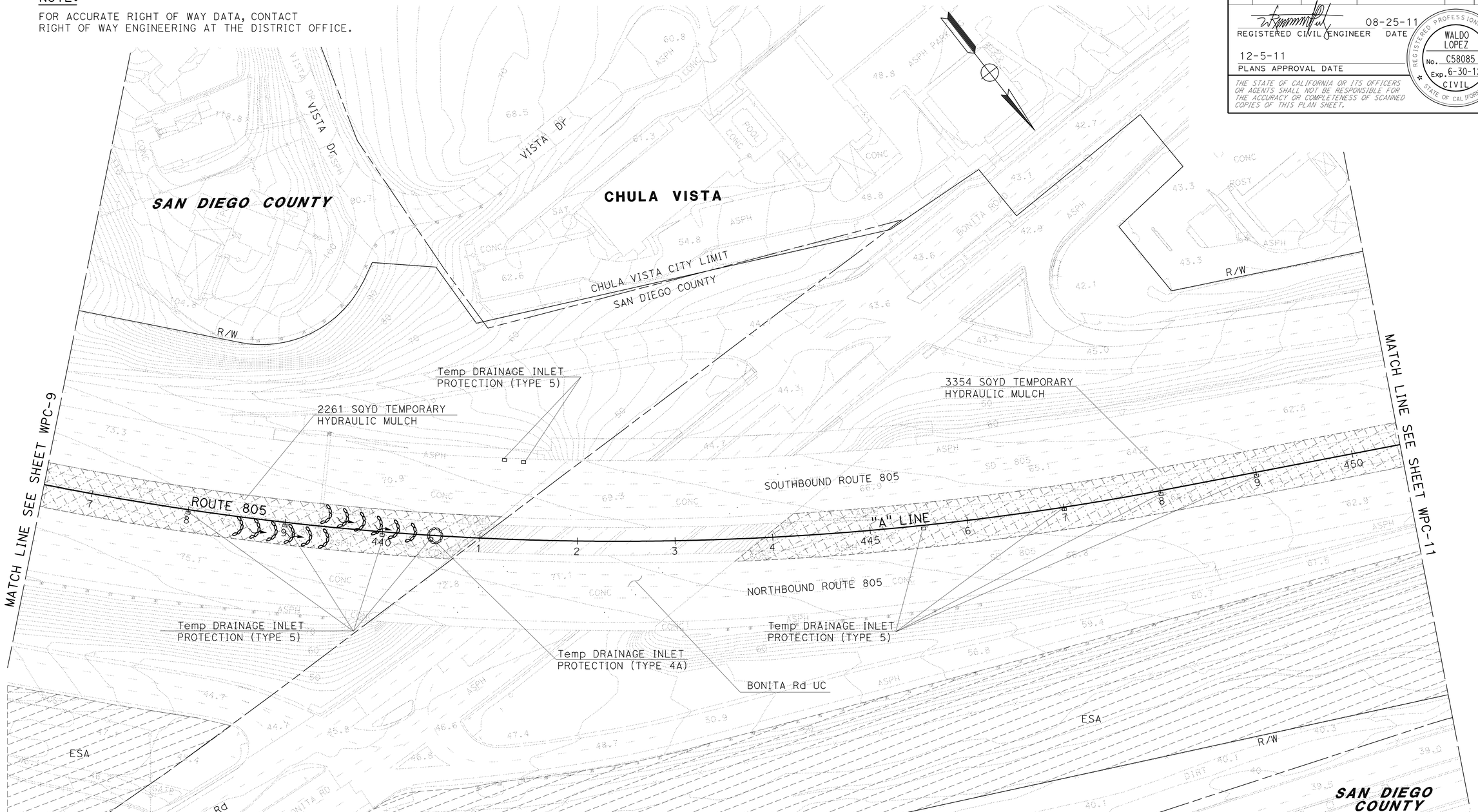

TEMPORARY WATER POLLUTION CONTROL PLAN
(STAGE 2)

SCALE: 1" = 50'

WPC-10

APPROVED FOR TEMPORARY WATER POLLUTION CONTROL WORK ONLY

STATE OF CALIFORNIA - DEPARTMENT OF TRANSPORTATION
Caltrans PROJECT DEVELOPMENT

FUNCTIONAL SUPERVISOR: ROGER CARLIN

CALCULATED-DESIGNED BY: WALDO R. LOPEZ
CHECKED BY: WALDO R. LOPEZ
REVISED BY
DATE REVISED

LAST REVISION 08-26-11 | DATE PLOTTED => 09-DEC-2011 | TIME PLOTTED => 10:23

Dist	COUNTY	ROUTE	POST MILES TOTAL PROJECT	SHEET No.	TOTAL SHEETS
11	SD	54,805	1.8,5.5/9.4	65	635

REGISTERED CIVIL ENGINEER 08-25-11 DATE

12-5-11
PLANS APPROVAL DATE

REGISTERED PROFESSIONAL ENGINEER WALDO LOPEZ No. C58085 Exp. 6-30-12 CIVIL STATE OF CALIFORNIA

THE STATE OF CALIFORNIA OR ITS OFFICERS OR AGENTS SHALL NOT BE RESPONSIBLE FOR THE ACCURACY OR COMPLETENESS OF SCANNED COPIES OF THIS PLAN SHEET.

NOTE:

FOR ACCURATE RIGHT OF WAY DATA, CONTACT RIGHT OF WAY ENGINEERING AT THE DISTRICT OFFICE.

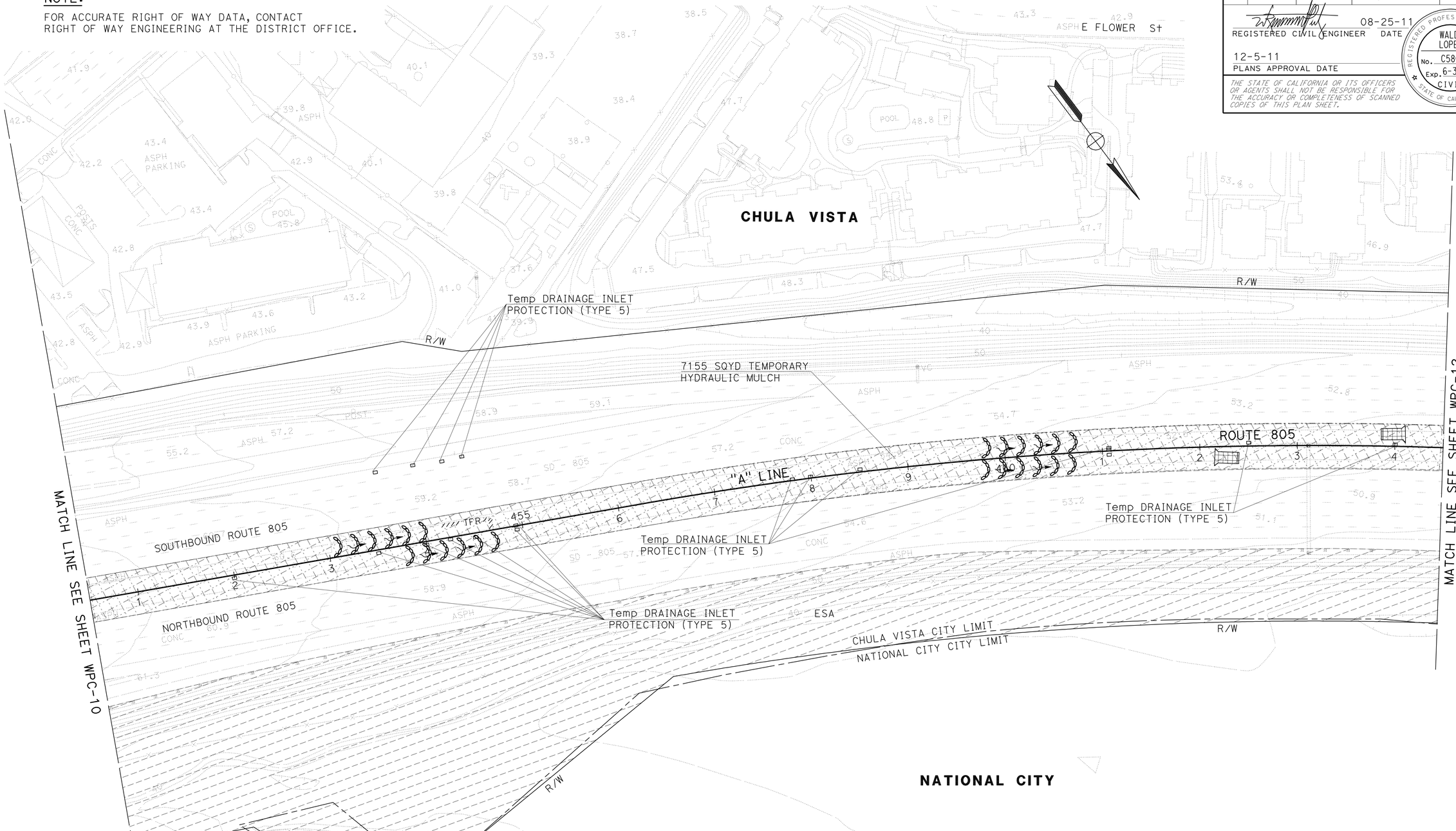

APPROVED FOR TEMPORARY WATER POLLUTION CONTROL WORK ONLY

TEMPORARY WATER POLLUTION CONTROL PLAN
(STAGE 2)

SCALE: 1" = 50'

WPC-11

STATE OF CALIFORNIA - DEPARTMENT OF TRANSPORTATION
Caltrans PROJECT DEVELOPMENT

FUNCTIONAL SUPERVISOR: ROGER CARLIN
CALCULATED-DESIGNED BY: WALDO R. LOPEZ
CHECKED BY: WALDO R. LOPEZ
REVISED BY
DATE REVISED

LAST REVISION 08-26-11
DATE PLOTTED => 09-DEC-2011
TIME PLOTTED => 10:24

Dist	COUNTY	ROUTE	POST MILES TOTAL PROJECT	SHEET No.	TOTAL SHEETS
11	SD	54,805	1.8,5.5/9.4	66	635

REGISTERED CIVIL ENGINEER 08-25-11 DATE

12-5-11
PLANS APPROVAL DATE

REGISTERED PROFESSIONAL ENGINEER WALDO LOPEZ No. C58085 Exp. 6-30-12 CIVIL STATE OF CALIFORNIA

THE STATE OF CALIFORNIA OR ITS OFFICERS OR AGENTS SHALL NOT BE RESPONSIBLE FOR THE ACCURACY OR COMPLETENESS OF SCANNED COPIES OF THIS PLAN SHEET.

NOTE:

FOR ACCURATE RIGHT OF WAY DATA, CONTACT RIGHT OF WAY ENGINEERING AT THE DISTRICT OFFICE.

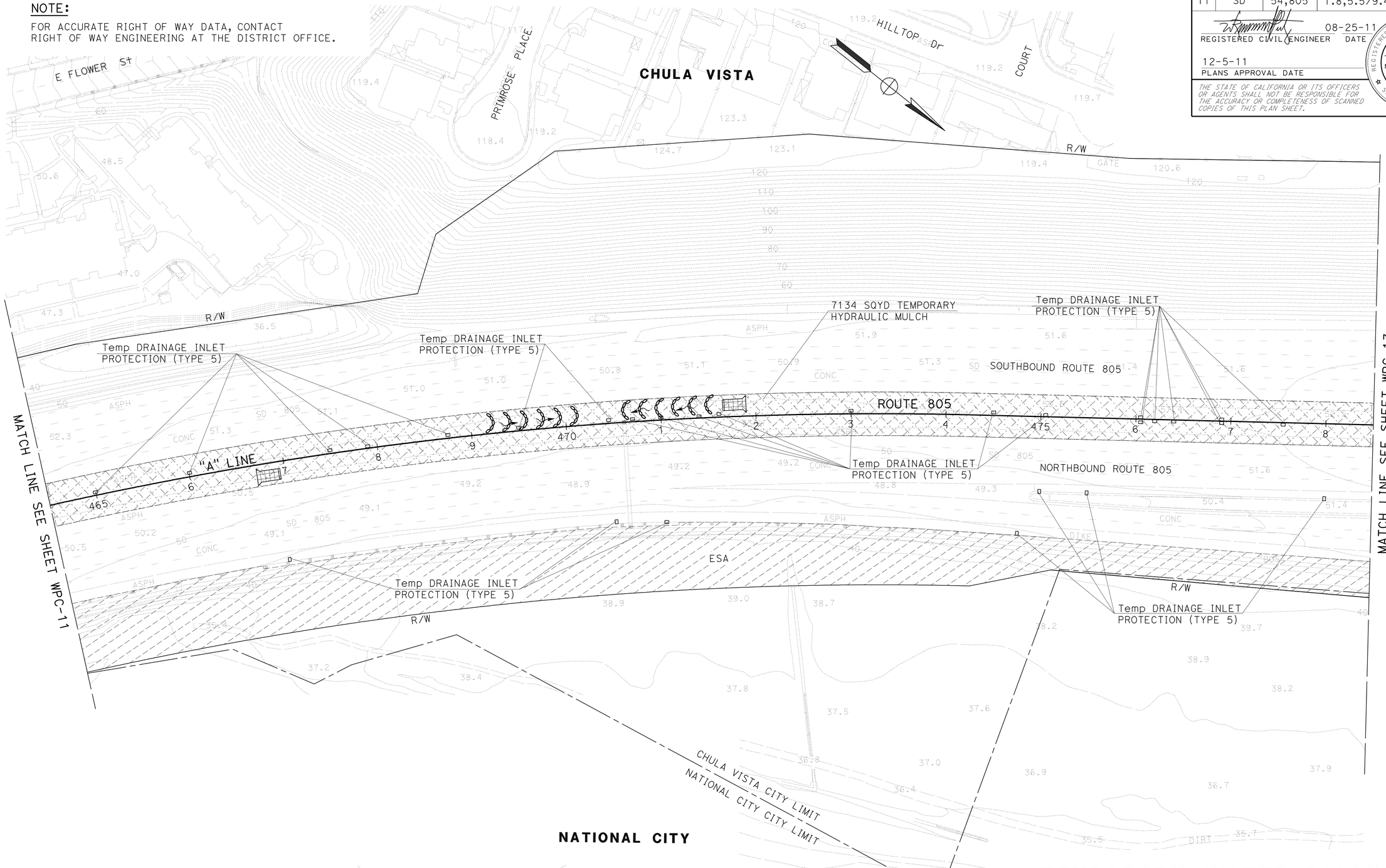

TEMPORARY WATER POLLUTION CONTROL PLAN
(STAGE 2)

APPROVED FOR TEMPORARY WATER POLLUTION CONTROL WORK ONLY

SCALE: 1" = 50'

WPC-12

STATE OF CALIFORNIA - DEPARTMENT OF TRANSPORTATION
Caltrans PROJECT DEVELOPMENT

FUNCTIONAL SUPERVISOR: ROGER CARLIN

CALCULATED-DESIGNED BY: WALDO R. LOPEZ
CHECKED BY: WALDO R. LOPEZ
REVISED BY
DATE REVISED

LAST REVISION 08-26-11
DATE PLOTTED => 09-DEC-2011
TIME PLOTTED => 10:24

Dist	COUNTY	ROUTE	POST MILES TOTAL PROJECT	SHEET No.	TOTAL SHEETS
11	SD	54,805	1.8,5.5/9.4	67	635

REGISTERED CIVIL ENGINEER 08-25-11 DATE

12-5-11
PLANS APPROVAL DATE

REGISTERED PROFESSIONAL ENGINEER WALDO LOPEZ No. C58085 Exp. 6-30-12 CIVIL STATE OF CALIFORNIA

THE STATE OF CALIFORNIA OR ITS OFFICERS OR AGENTS SHALL NOT BE RESPONSIBLE FOR THE ACCURACY OR COMPLETENESS OF SCANNED COPIES OF THIS PLAN SHEET.

NOTE:

FOR ACCURATE RIGHT OF WAY DATA, CONTACT RIGHT OF WAY ENGINEERING AT THE DISTRICT OFFICE.

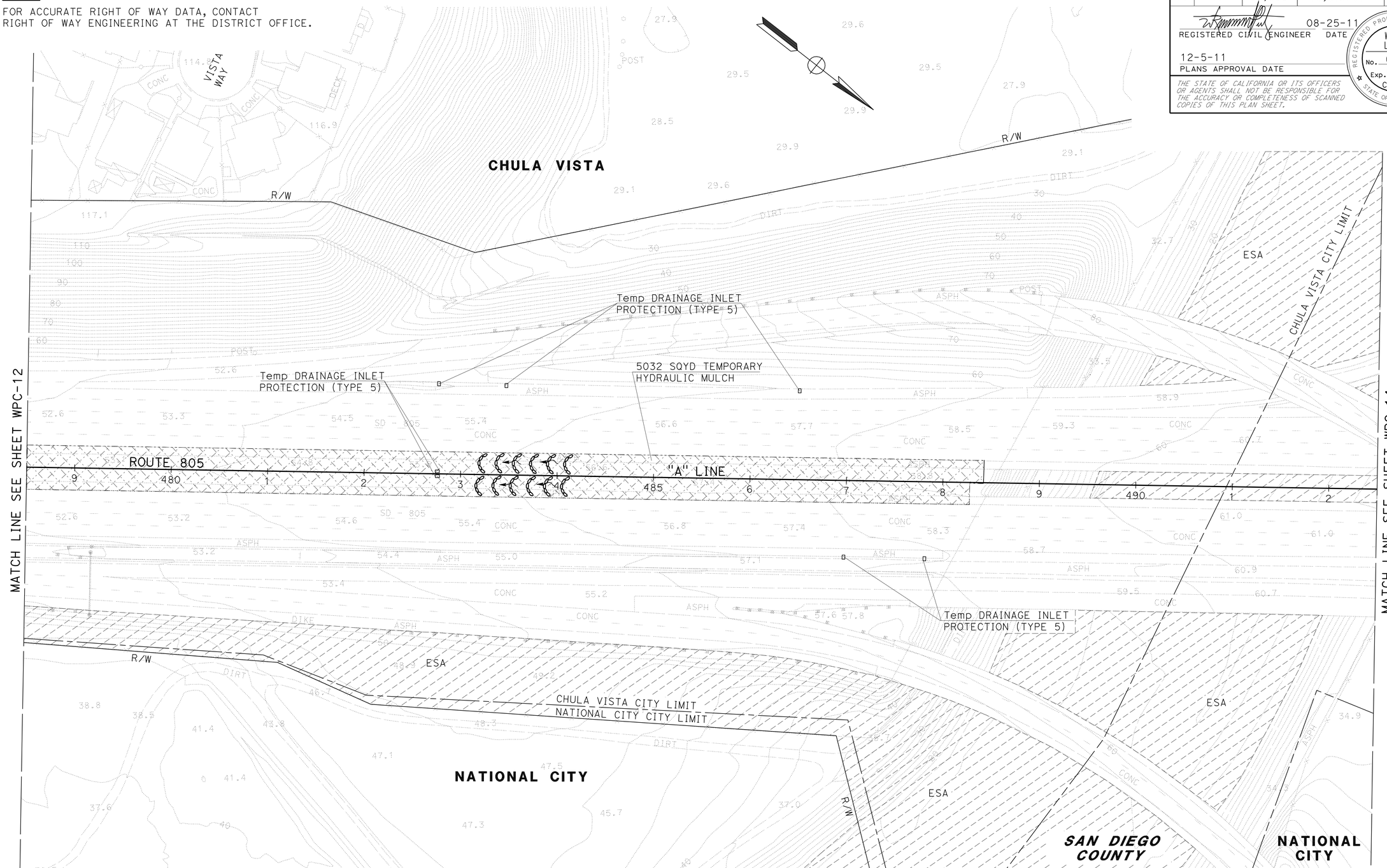

TEMPORARY WATER POLLUTION CONTROL PLAN
(STAGE 2)

SCALE: 1" = 50'

WPC-13

APPROVED FOR TEMPORARY WATER POLLUTION CONTROL WORK ONLY

STATE OF CALIFORNIA - DEPARTMENT OF TRANSPORTATION
Caltrans PROJECT DEVELOPMENT

FUNCTIONAL SUPERVISOR: ROGER CARLIN

CALCULATED-DESIGNED BY: WALDO R. LOPEZ
CHECKED BY: WALDO R. LOPEZ
REVISED BY
DATE REVISED

LAST REVISION 08-26-11 | DATE PLOTTED => 09-DEC-2011 | TIME PLOTTED => 10:24

Dist	COUNTY	ROUTE	POST MILES TOTAL PROJECT	SHEET No.	TOTAL SHEETS
11	SD	54,805	1.8,5.5/9.4	68	635

REGISTERED CIVIL ENGINEER 08-25-11 DATE

12-5-11
PLANS APPROVAL DATE

REGISTERED PROFESSIONAL ENGINEER WALDO LOPEZ No. C58085 Exp. 6-30-12 CIVIL STATE OF CALIFORNIA

THE STATE OF CALIFORNIA OR ITS OFFICERS OR AGENTS SHALL NOT BE RESPONSIBLE FOR THE ACCURACY OR COMPLETENESS OF SCANNED COPIES OF THIS PLAN SHEET.

NOTE:

FOR ACCURATE RIGHT OF WAY DATA, CONTACT RIGHT OF WAY ENGINEERING AT THE DISTRICT OFFICE.

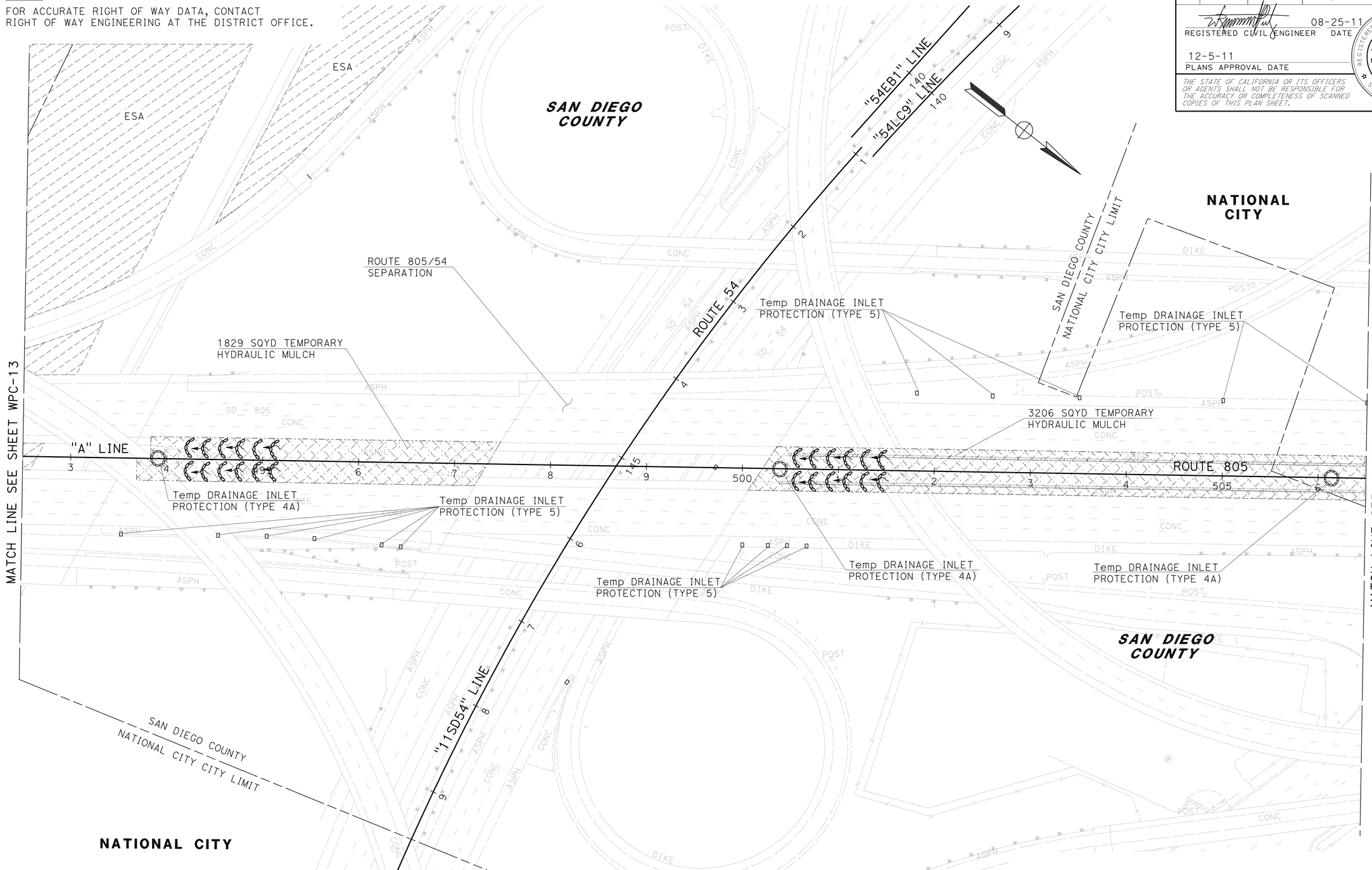

TEMPORARY WATER POLLUTION CONTROL PLAN
(STAGE 3)

SCALE: 1" = 50'

WPC-14

APPROVED FOR TEMPORARY WATER POLLUTION CONTROL WORK ONLY

STATE OF CALIFORNIA - DEPARTMENT OF TRANSPORTATION
Caltrans PROJECT DEVELOPMENT

FUNCTIONAL SUPERVISOR: ROGER CARLIN

CALCULATED-DESIGNED BY: WALDO R. LOPEZ
CHECKED BY: WALDO R. LOPEZ
REVISED BY
DATE REVISED

LAST REVISION 08-07-11
DATE PLOTTED => 09-DEC-2011
TIME PLOTTED => 10:24

Dist	COUNTY	ROUTE	POST MILES TOTAL PROJECT	SHEET No.	TOTAL SHEETS
11	SD	54,805	1.8,5.5/9.4	69	635

REGISTERED CIVIL ENGINEER 08-25-11 DATE

12-5-11
PLANS APPROVAL DATE

REGISTERED PROFESSIONAL ENGINEER WALDO LOPEZ No. C58085 Exp. 6-30-12 CIVIL STATE OF CALIFORNIA

THE STATE OF CALIFORNIA OR ITS OFFICERS OR AGENTS SHALL NOT BE RESPONSIBLE FOR THE ACCURACY OR COMPLETENESS OF SCANNED COPIES OF THIS PLAN SHEET.

NOTE:

FOR ACCURATE RIGHT OF WAY DATA, CONTACT RIGHT OF WAY ENGINEERING AT THE DISTRICT OFFICE.

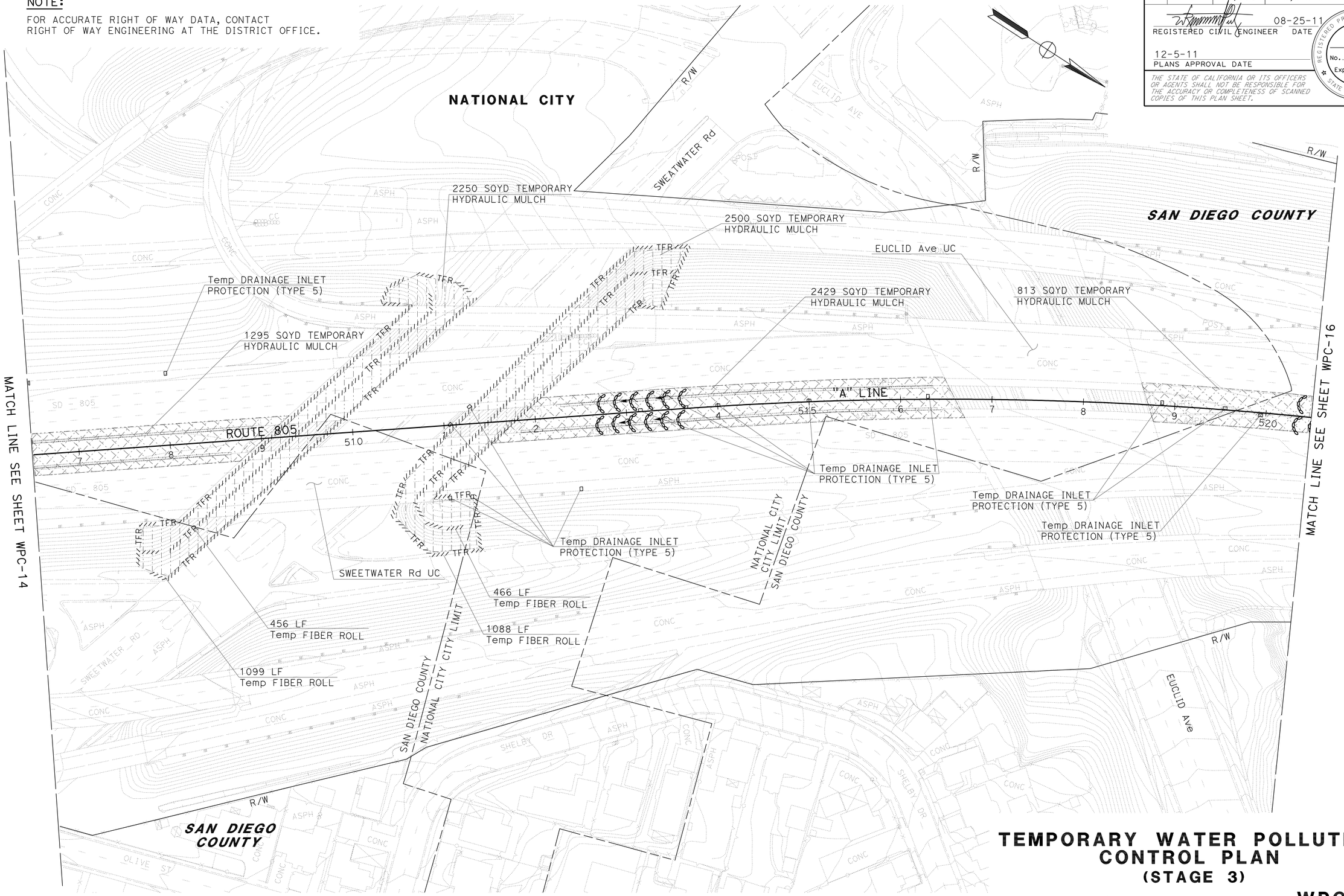

TEMPORARY WATER POLLUTION CONTROL PLAN
(STAGE 3)

SCALE: 1" = 50'

WPC-15

APPROVED FOR TEMPORARY WATER POLLUTION CONTROL WORK ONLY

STATE OF CALIFORNIA - DEPARTMENT OF TRANSPORTATION
Caltrans PROJECT DEVELOPMENT

FUNCTIONAL SUPERVISOR: ROGER CARLIN
CALCULATED-DESIGNED BY: WALDO R. LOPEZ
CHECKED BY: WALDO R. LOPEZ
REVISED BY
DATE REVISED

LAST REVISION DATE PLOTTED => 09-DEC-2011
TIME PLOTTED => 10:24
08-26-11

Dist	COUNTY	ROUTE	POST MILES TOTAL PROJECT	SHEET No.	TOTAL SHEETS
11	SD	54,805	1.8,5.5/9.4	70	635

08-25-11
REGISTERED CIVIL ENGINEER DATE

12-5-11
PLANS APPROVAL DATE

REGISTERED PROFESSIONAL ENGINEER
WALDO LOPEZ
No. C58085
Exp. 6-30-12
CIVIL
STATE OF CALIFORNIA

THE STATE OF CALIFORNIA OR ITS OFFICERS OR AGENTS SHALL NOT BE RESPONSIBLE FOR THE ACCURACY OR COMPLETENESS OF SCANNED COPIES OF THIS PLAN SHEET.

NOTE:

FOR ACCURATE RIGHT OF WAY DATA, CONTACT RIGHT OF WAY ENGINEERING AT THE DISTRICT OFFICE.

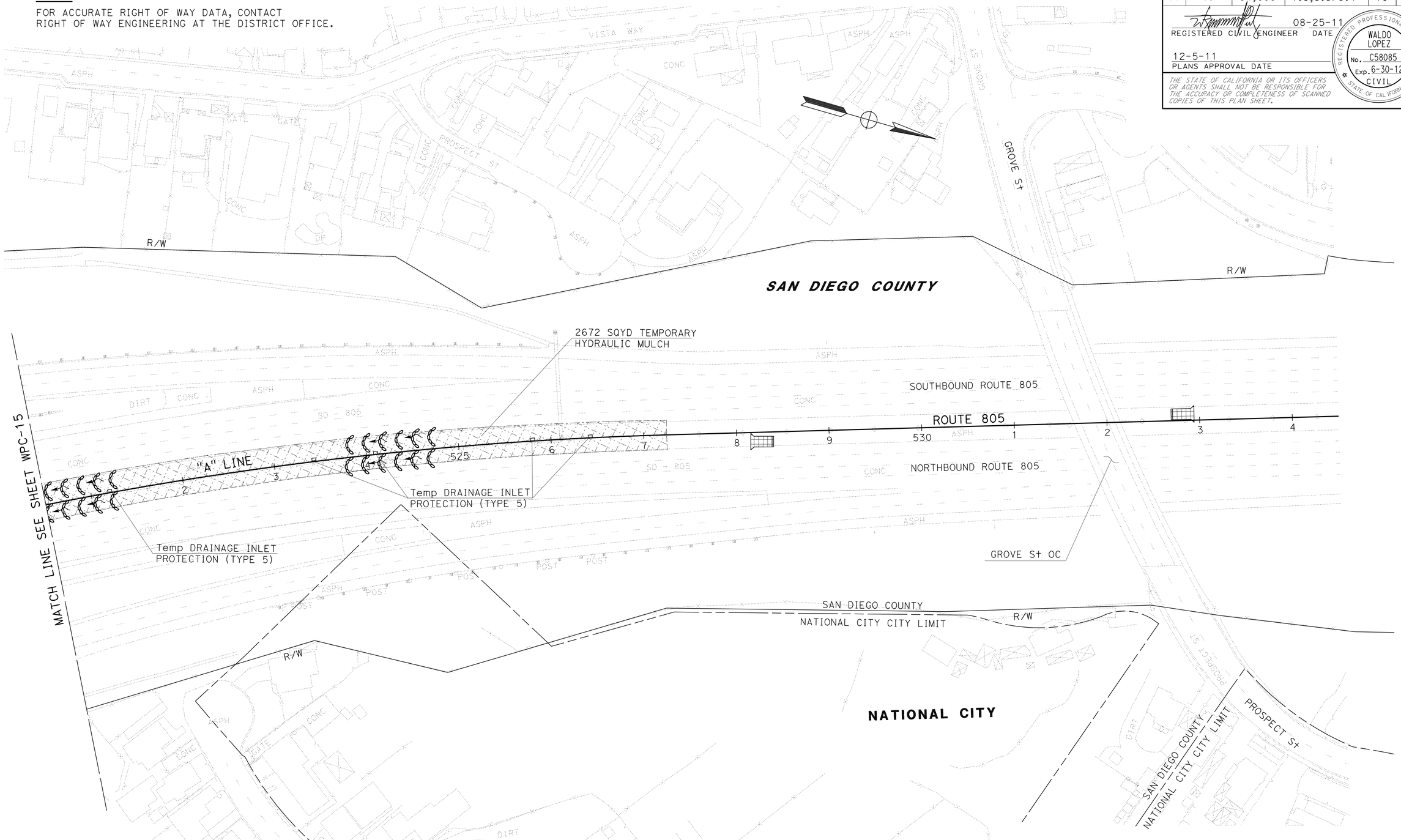

TEMPORARY WATER POLLUTION CONTROL PLAN
(STAGE 3)

SCALE: 1" = 50'

WPC-16

APPROVED FOR TEMPORARY WATER POLLUTION CONTROL WORK ONLY

STATE OF CALIFORNIA - DEPARTMENT OF TRANSPORTATION
Caltrans PROJECT DEVELOPMENT

FUNCTIONAL SUPERVISOR: ROGER CARLIN
CALCULATED-DESIGNED BY: WALDO R. LOPEZ
CHECKED BY: WALDO R. LOPEZ
REVISED BY
DATE REVISED

LAST REVISION 08-26-11
DATE PLOTTED => 09-DEC-2011
TIME PLOTTED => 10:24

Dist	COUNTY	ROUTE	POST MILES TOTAL PROJECT	SHEET No.	TOTAL SHEETS
11	SD	54,805	1.8,5.5/9.4	71	635

REGISTERED CIVIL ENGINEER 08-25-11 DATE

12-5-11
PLANS APPROVAL DATE

REGISTERED PROFESSIONAL ENGINEER
WALDO LOPEZ
No. C58085
Exp. 6-30-12
CIVIL
STATE OF CALIFORNIA

THE STATE OF CALIFORNIA OR ITS OFFICERS OR AGENTS SHALL NOT BE RESPONSIBLE FOR THE ACCURACY OR COMPLETENESS OF SCANNED COPIES OF THIS PLAN SHEET.

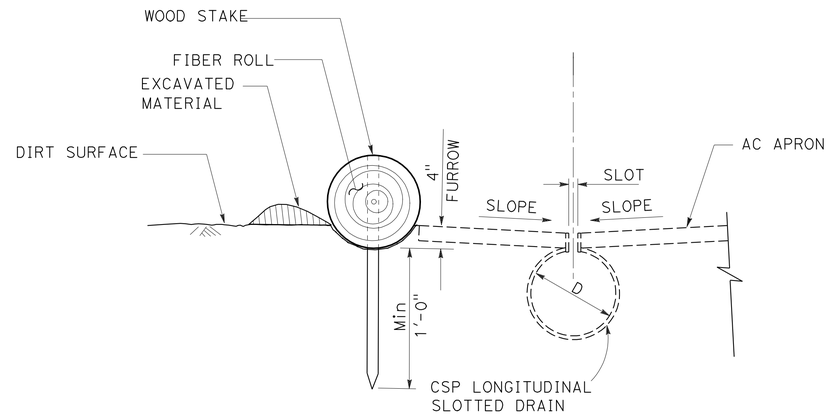

SECTION A-A

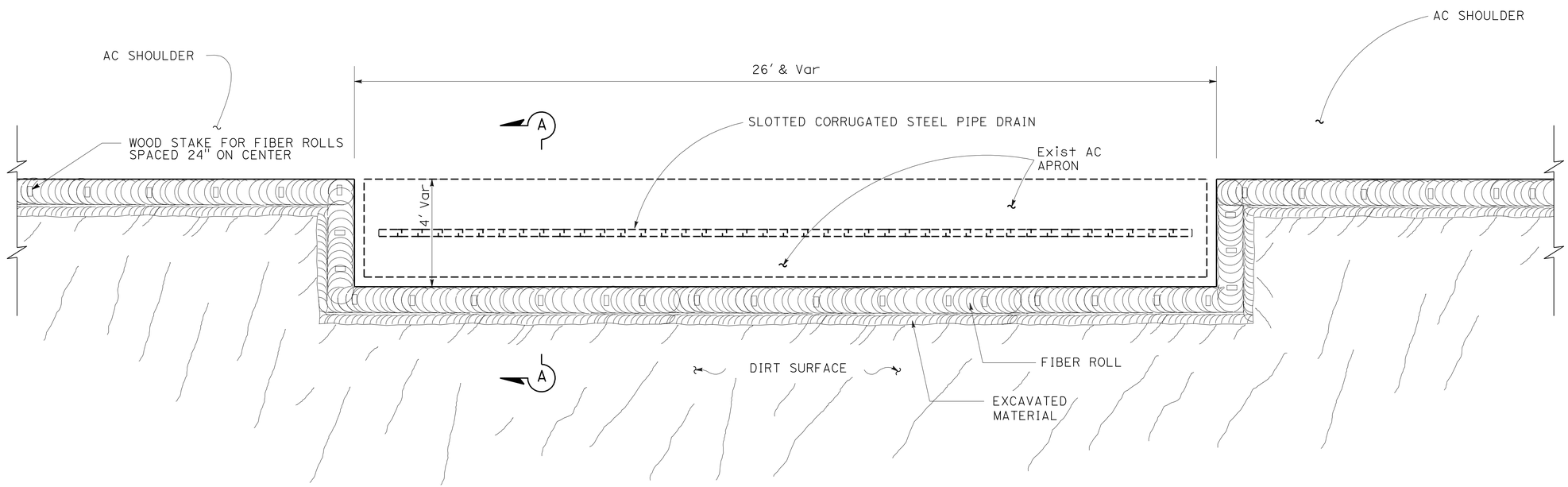

PLAN

TEMPORARY FIBER ROLL (MODIFIED)

TEMPORARY WATER POLLUTION CONTROL DETAILS

NO SCALE

WPCD-1

STATE OF CALIFORNIA - DEPARTMENT OF TRANSPORTATION
Caltrans PROJECT DEVELOPMENT

FUNCTIONAL SUPERVISOR: ROGER CARLIN

CALCULATED-DESIGNED BY: WALDO R. LOPEZ
CHECKED BY: WALDO R. LOPEZ

REVISED BY
DATE REVISED

LAST REVISION 08-26-11
DATE PLOTTED => 09-DEC-2011
TIME PLOTTED => 10:24

Dist	COUNTY	ROUTE	POST MILES TOTAL PROJECT	SHEET No.	TOTAL SHEETS
11	SD	54,805	1.8,5.5/9.4	72	635

REGISTERED CIVIL ENGINEER 08-25-11 DATE

12-5-11
PLANS APPROVAL DATE

REGISTERED PROFESSIONAL ENGINEER WALDO LOPEZ No. C58085 Exp. 6-30-12 CIVIL STATE OF CALIFORNIA

THE STATE OF CALIFORNIA OR ITS OFFICERS OR AGENTS SHALL NOT BE RESPONSIBLE FOR THE ACCURACY OR COMPLETENESS OF SCANNED COPIES OF THIS PLAN SHEET.

TEMPORARY WATER POLLUTION CONTROL QUANTITIES

SHEET NUMBER	TEMPORARY FIBER ROLL	TEMPORARY DRAINAGE INLET PROTECTION			TEMPORARY HYDRAULIC MULCH	TEMPORARY CONSTRUCTION ENTRANCE	TEMPORARY CHECK DAM
		TYPE 4A	TYPE 5	TYPE 3B		TYPE 2	TYPE 2
	(LF)	(EA)	(EA)	(EA)	(SQYD)	(EA)	(LF)
WPC-1	2,327				2,962	1	
WPC-2	420		8		7,156		480
WPC-3	1,271	2	22	2	7,562		260
WPC-4	270		12		6,636		240
WPC-5	417		11		6,638		480
WPC-6	654		9		8,198	3	560
WPC-7	2,328	3	17	1	11,326	1	1,280
WPC-8	540		7		7,156		520
WPC-9	1,074		12		7,896		720
WPC-10		1	10		5,615		240
WPC-11			17		7,155	2	480
WPC-12			28		7,134	2	240
WPC-13			7		5,032		240
WPC-14		3	15		5,035		480
WPC-15	3,109		14		9,287		280
WPC-16			5		2,672	2	440
SUBTOTAL	12,410	9	194	3	107,460	11	6,940
TOTAL	12,410	203			107,460	11	6,940

TEMPORARY WATER POLLUTION CONTROL QUANTITIES

WPCQ-1

STATE OF CALIFORNIA - DEPARTMENT OF TRANSPORTATION
Caltrans PROJECT DEVELOPMENT

FUNCTIONAL SUPERVISOR: ROGER CARLIN
CALCULATED-DESIGNED BY: WALDO R. LOPEZ
CHECKED BY: WALDO R. LOPEZ
REVISED BY
DATE REVISED

LAST REVISION 08-26-11
DATE PLOTTED => 09-DEC-2011
TIME PLOTTED => 10:24

Dist	COUNTY	ROUTE	POST MILES TOTAL PROJECT	SHEET No.	TOTAL SHEETS
11	SD	54,805	1.8,5.5/9.4	73	635

REGISTERED CIVIL ENGINEER 08-25-11 DATE

12-5-11
PLANS APPROVAL DATE

REGISTERED PROFESSIONAL ENGINEER WALDO LOPEZ No. C58085 Exp. 6-30-12 CIVIL STATE OF CALIFORNIA

THE STATE OF CALIFORNIA OR ITS OFFICERS OR AGENTS SHALL NOT BE RESPONSIBLE FOR THE ACCURACY OR COMPLETENESS OF SCANNED COPIES OF THIS PLAN SHEET.

NOTE:

1. FOR ACCURATE RIGHT OF WAY DATA, CONTACT RIGHT OF WAY ENGINEERING AT THE DISTRICT OFFICE.
2. FOR LOCATION OF COMPOST (INCORPORATE) WORK, SEE PLANTING PLANS.

LEGEND:

- FR — FIBER ROLLS
- DRAINAGE INLET PROTECTION (EROSION CONTROL)
- CHECK DAM (EROSION CONTROL) 20' SPACING (LENGTH = 20' EACH)
- ESA — ENVIRONMENTALLY SENSITIVE AREA

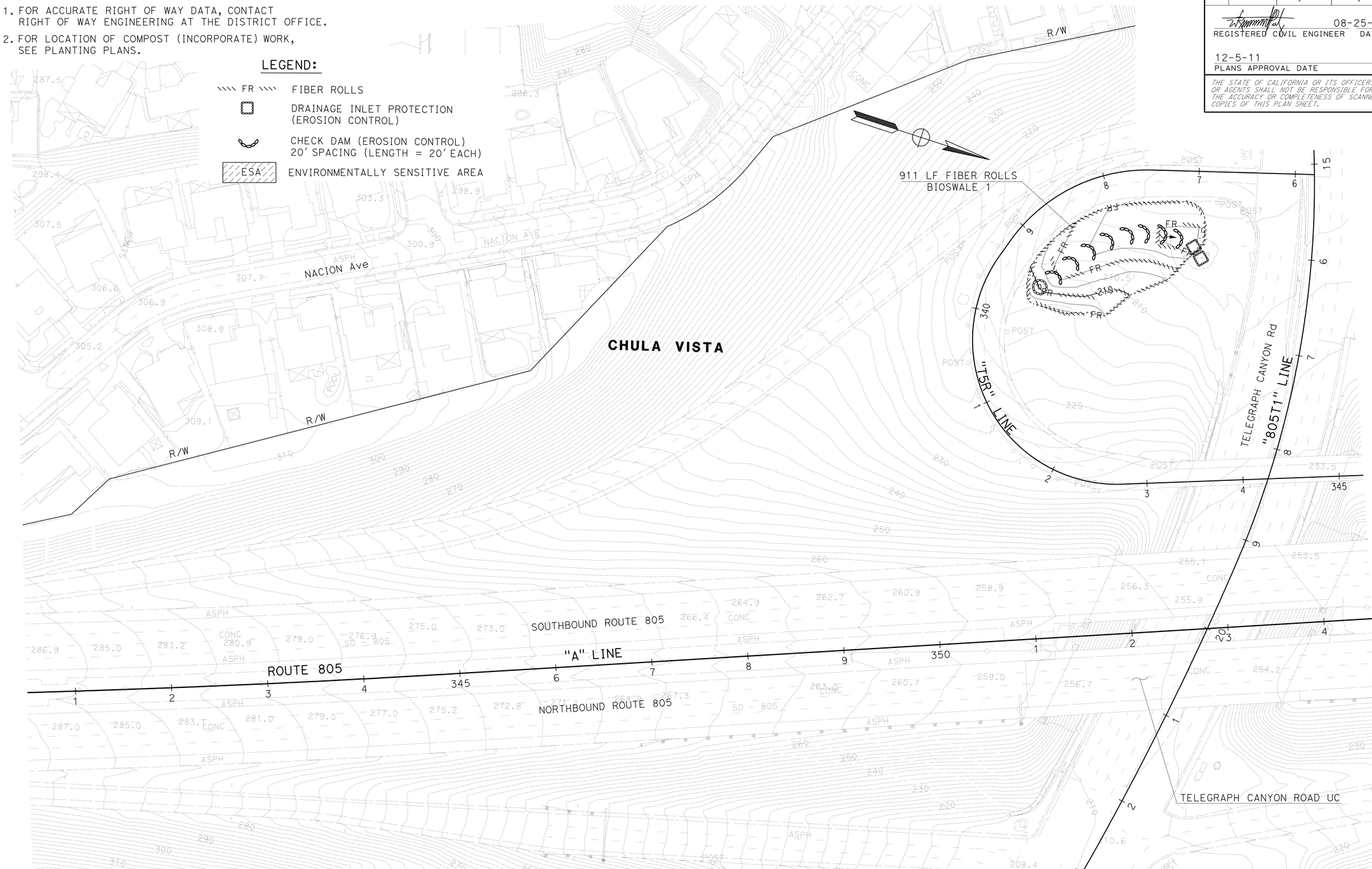

EROSION CONTROL PLAN

SCALE: 1" = 50'

EC-1

APPROVED FOR EROSION CONTROL WORK ONLY

STATE OF CALIFORNIA - DEPARTMENT OF TRANSPORTATION
Caltrans PROJECT DEVELOPMENT

FUNCTIONAL SUPERVISOR: ROGER CARLIN

CALCULATED-DESIGNED BY: WALDO R. LOPEZ
CHECKED BY: WALDO R. LOPEZ
REVISED BY
DATE REVISED

LAST REVISION 08-26-11
DATE PLOTTED => 09-DEC-2011
TIME PLOTTED => 10:24

Dist	COUNTY	ROUTE	POST MILES TOTAL PROJECT	SHEET No.	TOTAL SHEETS
11	SD	54,805	1.8,5.5/9.4	74	635

REGISTERED CIVIL ENGINEER 08-25-11 DATE

12-5-11
PLANS APPROVAL DATE

REGISTERED PROFESSIONAL ENGINEER WALDO LOPEZ No. C58085 Exp. 6-30-12 CIVIL STATE OF CALIFORNIA

THE STATE OF CALIFORNIA OR ITS OFFICERS OR AGENTS SHALL NOT BE RESPONSIBLE FOR THE ACCURACY OR COMPLETENESS OF SCANNED COPIES OF THIS PLAN SHEET.

NOTE:

FOR ACCURATE RIGHT OF WAY DATA, CONTACT RIGHT OF WAY ENGINEERING AT THE DISTRICT OFFICE.

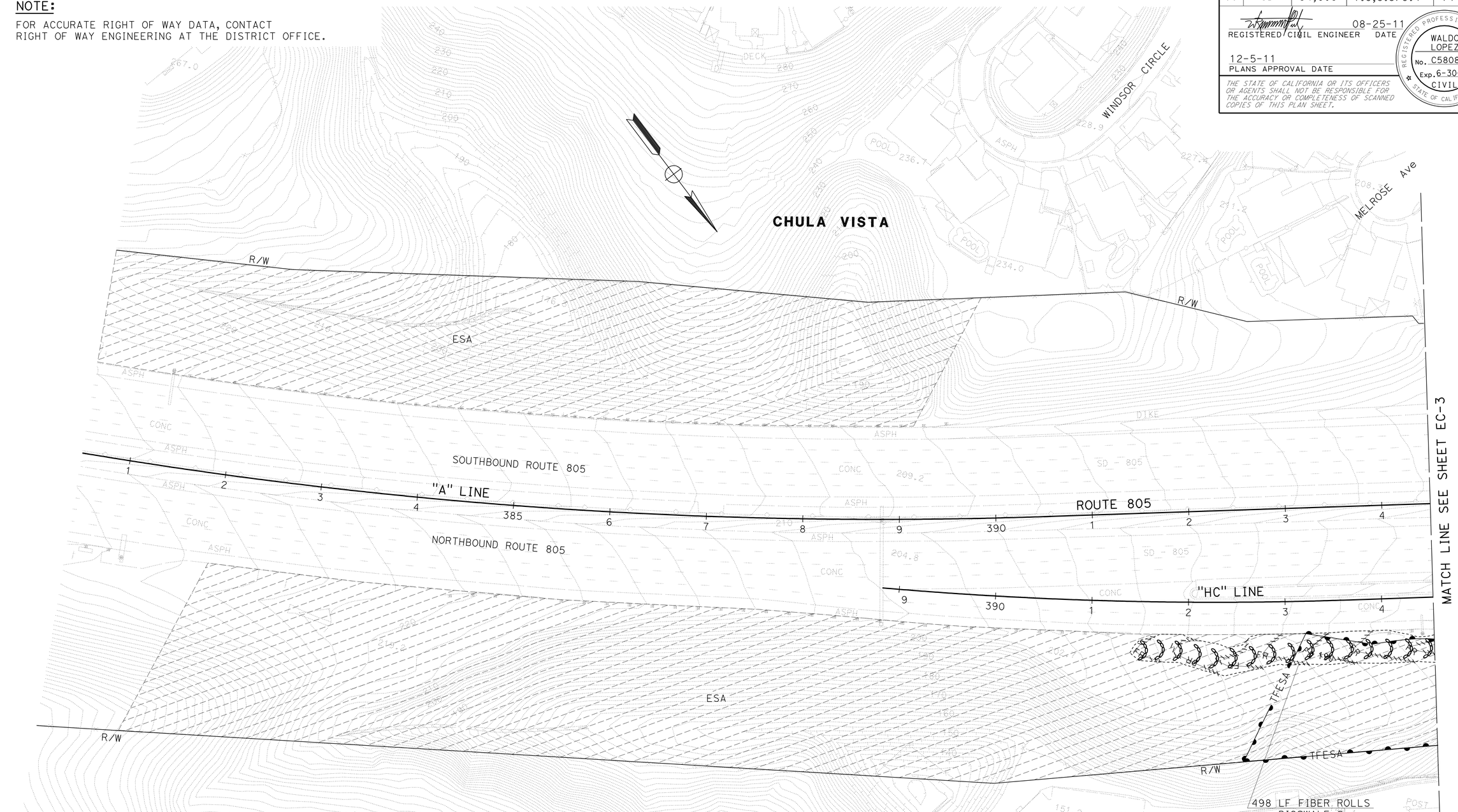

EROSION CONTROL PLAN

APPROVED FOR EROSION CONTROL WORK ONLY

SCALE: 1" = 50'

EC-2

STATE OF CALIFORNIA - DEPARTMENT OF TRANSPORTATION
Caltrans PROJECT DEVELOPMENT

FUNCTIONAL SUPERVISOR: ROGER CARLIN

CALCULATED-DESIGNED BY: WALDO R. LOPEZ
CHECKED BY: WALDO R. LOPEZ

REVISED BY
DATE REVISED

LAST REVISION 08-26-11
DATE PLOTTED => 09-DEC-2011
TIME PLOTTED => 10:24

Dist	COUNTY	ROUTE	POST MILES TOTAL PROJECT	SHEET No.	TOTAL SHEETS
11	SD	54,805	1.8,5.5/9.4	75	635

REGISTERED CIVIL ENGINEER 08-25-11 DATE

12-5-11
PLANS APPROVAL DATE

REGISTERED PROFESSIONAL ENGINEER
WALDO LOPEZ
No. C58085
Exp. 6-30-12
CIVIL
STATE OF CALIFORNIA

THE STATE OF CALIFORNIA OR ITS OFFICERS OR AGENTS SHALL NOT BE RESPONSIBLE FOR THE ACCURACY OR COMPLETENESS OF SCANNED COPIES OF THIS PLAN SHEET.

NOTE:

FOR ACCURATE RIGHT OF WAY DATA, CONTACT RIGHT OF WAY ENGINEERING AT THE DISTRICT OFFICE.

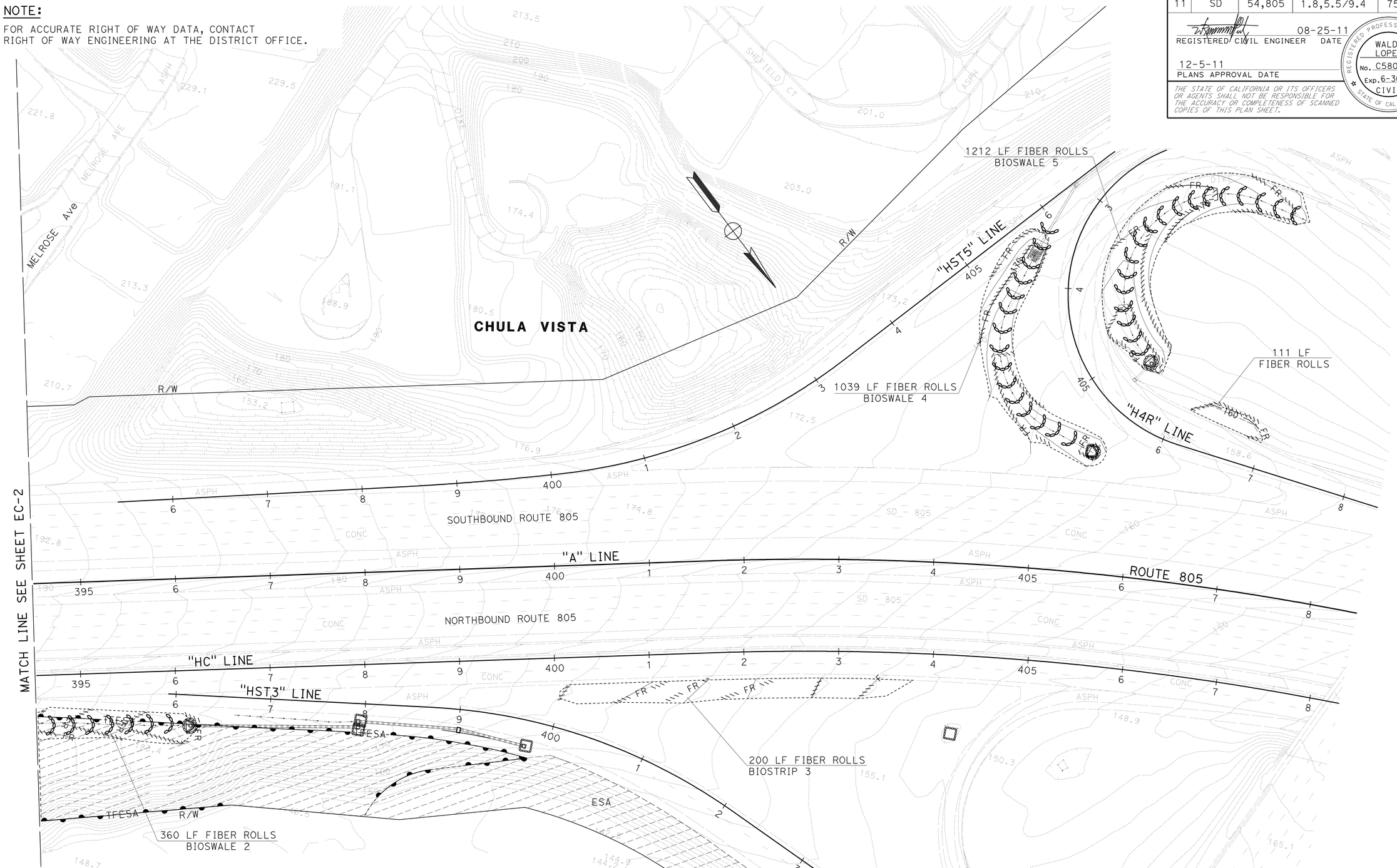

EROSION CONTROL PLAN

APPROVED FOR EROSION CONTROL WORK ONLY

SCALE: 1" = 50'

EC-3

STATE OF CALIFORNIA - DEPARTMENT OF TRANSPORTATION
Caltrans PROJECT DEVELOPMENT

FUNCTIONAL SUPERVISOR: ROGER CARLIN
CALCULATED-DESIGNED BY: WALDO R. LOPEZ
CHECKED BY: WALDO R. LOPEZ
REVISED BY
DATE REVISED

LAST REVISION 08-26-11
DATE PLOTTED => 09-DEC-2011
TIME PLOTTED => 10:25

Dist	COUNTY	ROUTE	POST MILES TOTAL PROJECT	SHEET No.	TOTAL SHEETS
11	SD	54,805	1.8,5.5/9.4	76	635

REGISTERED CIVIL ENGINEER 08-25-11 DATE

12-5-11
PLANS APPROVAL DATE

REGISTERED PROFESSIONAL ENGINEER
WALDO LOPEZ
No. C58085
Exp. 6-30-12
CIVIL
STATE OF CALIFORNIA

THE STATE OF CALIFORNIA OR ITS OFFICERS OR AGENTS SHALL NOT BE RESPONSIBLE FOR THE ACCURACY OR COMPLETENESS OF SCANNED COPIES OF THIS PLAN SHEET.

NOTE:

FOR ACCURATE RIGHT OF WAY DATA, CONTACT RIGHT OF WAY ENGINEERING AT THE DISTRICT OFFICE.

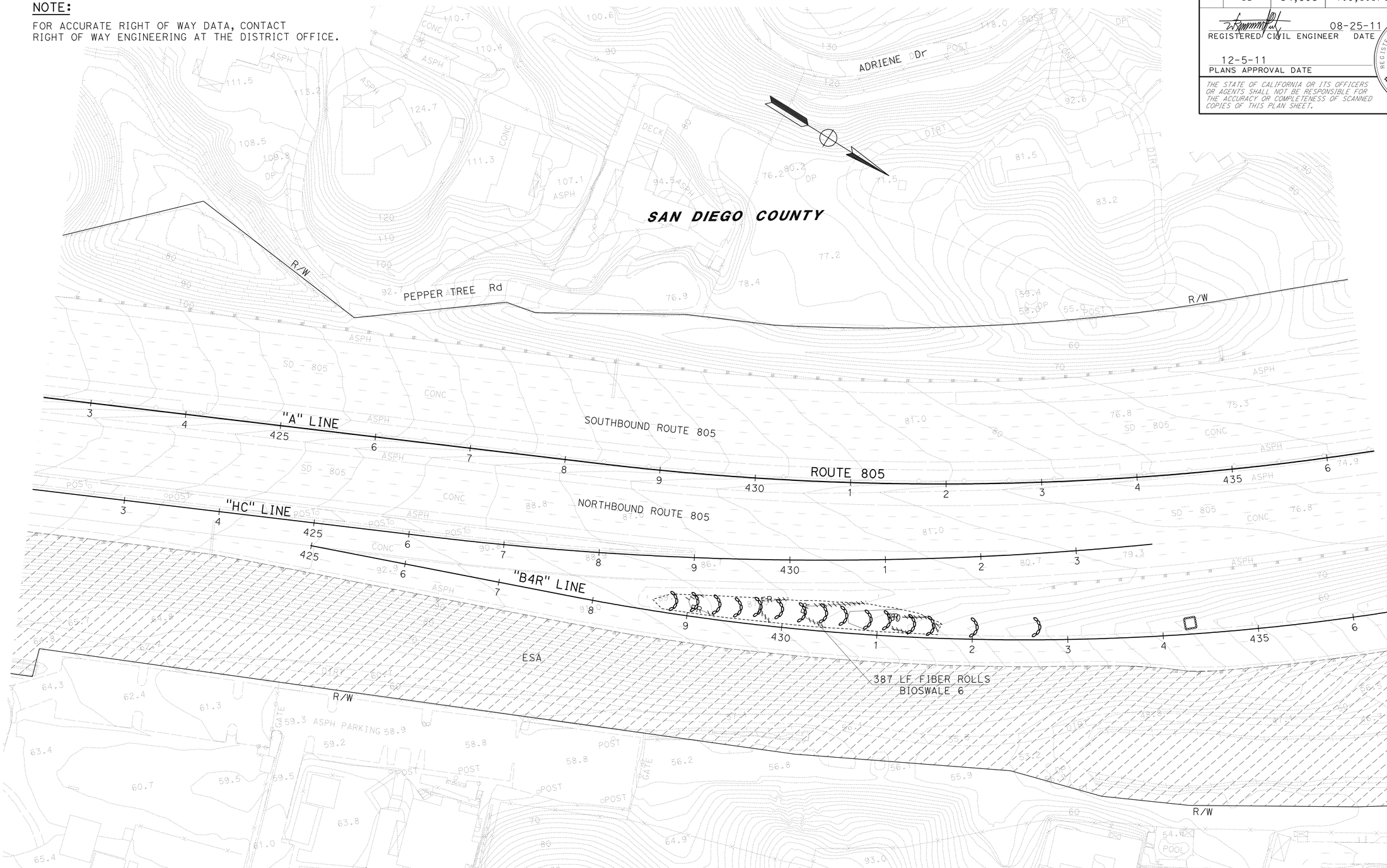

EROSION CONTROL PLAN

SCALE: 1" = 50'

EC-4

APPROVED FOR EROSION CONTROL WORK ONLY

STATE OF CALIFORNIA - DEPARTMENT OF TRANSPORTATION
Caltrans PROJECT DEVELOPMENT

FUNCTIONAL SUPERVISOR: ROGER CARLIN

CALCULATED-DESIGNED BY: WALDO R. LOPEZ
CHECKED BY: WALDO R. LOPEZ

REVISED BY
DATE REVISED

LAST REVISION 08-26-11
DATE PLOTTED => 09-DEC-2011
TIME PLOTTED => 10:00

Dist	COUNTY	ROUTE	POST MILES TOTAL PROJECT	SHEET No.	TOTAL SHEETS
11	SD	54,805	1.8,5.5/9.4	77	635

REGISTERED CIVIL ENGINEER 08-25-11 DATE

12-5-11
PLANS APPROVAL DATE

REGISTERED PROFESSIONAL ENGINEER WALDO LOPEZ No. C58085 Exp. 6-30-12 CIVIL STATE OF CALIFORNIA

THE STATE OF CALIFORNIA OR ITS OFFICERS OR AGENTS SHALL NOT BE RESPONSIBLE FOR THE ACCURACY OR COMPLETENESS OF SCANNED COPIES OF THIS PLAN SHEET.

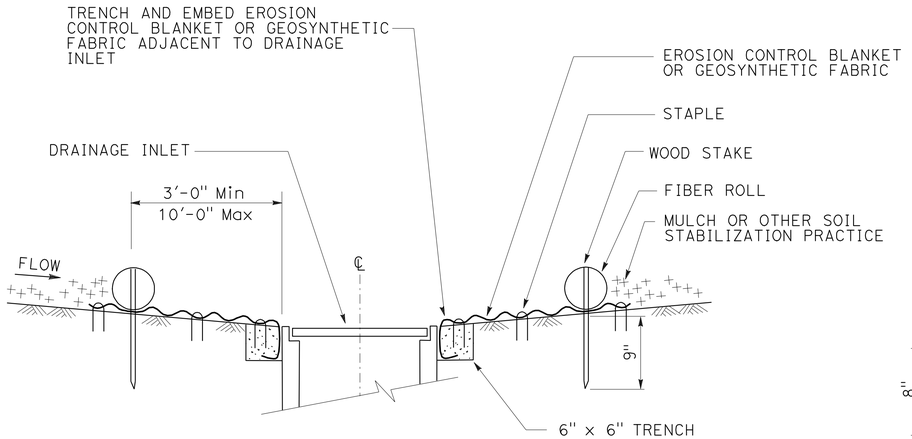

SECTION A-A

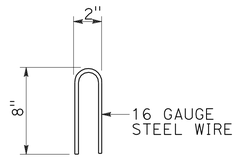

STAPLE DETAIL

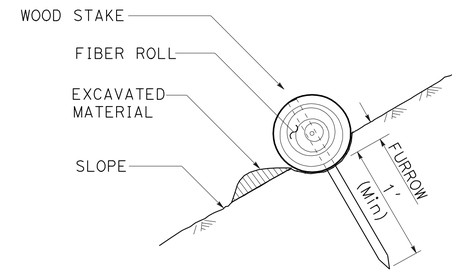

SECTION

FIBER ROLL

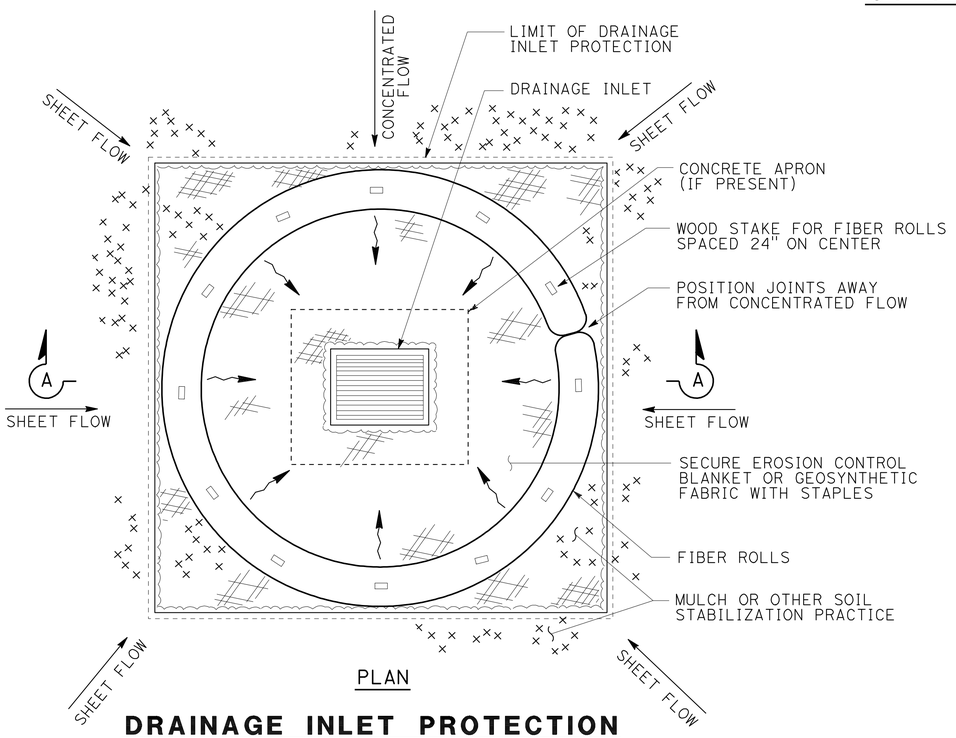

PLAN

DRAINAGE INLET PROTECTION (EROSION CONTROL)

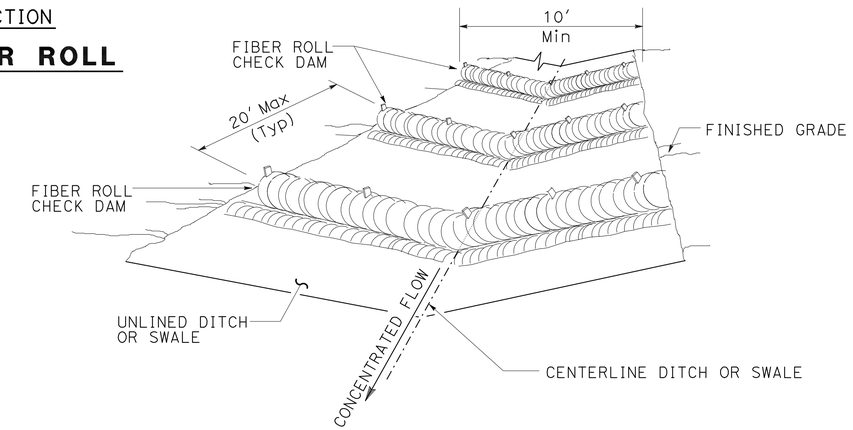

PERSPECTIVE

CHECK DAM (EROSION CONTROL)

(TOTAL OF 3 CHECK DAMS SHOWN)

EROSION CONTROL DETAILS

NO SCALE

ECD-1

STATE OF CALIFORNIA - DEPARTMENT OF TRANSPORTATION
Caltrans PROJECT DEVELOPMENT

FUNCTIONAL SUPERVISOR	CALCULATED-DESIGNED BY	REVISED BY	WALDO R. LOPEZ
ROGER CARLIN	WALDO R. LOPEZ	DATE REVISED	CHECKED BY

LAST REVISION 08-26-11 DATE PLOTTED => 09-DEC-2011 TIME PLOTTED => 10:00

Dist	COUNTY	ROUTE	POST MILES TOTAL PROJECT	SHEET No.	TOTAL SHEETS
11	SD	54,805	1.8,5.5/9.4	78	635

08-25-11
REGISTERED CIVIL ENGINEER DATE

12-5-11
PLANS APPROVAL DATE

REGISTERED PROFESSIONAL ENGINEER
WALDO LOPEZ
No. C58085
Exp. 6-30-12
CIVIL
STATE OF CALIFORNIA

THE STATE OF CALIFORNIA OR ITS OFFICERS OR AGENTS SHALL NOT BE RESPONSIBLE FOR THE ACCURACY OR COMPLETENESS OF SCANNED COPIES OF THIS PLAN SHEET.

EROSION CONTROL QUANTITIES

SHEET NUMBER	FIBER ROLLS (LF)	CHECK DAM (EROSION CONTROL) (LF)	DRAINAGE INLET PROTECTION (EROSION CONTROL) (EA)
EC-1	911	160	3
EC-2	498	320	-
EC-3	2922	800	7
EC-4	387	300	1
TOTAL	4718	1580	11

COMPOST (INCORPRATE)

SHEET NUMBER	SQYD
PP-1	121.00
PP-2	455.00
PP-3	677.00
TOTAL	1,253.00

EROSION CONTROL QUANTITIES
ECQ-1

STATE OF CALIFORNIA - DEPARTMENT OF TRANSPORTATION
Caltrans PROJECT DEVELOPMENT

FUNCTIONAL SUPERVISOR: ROGER CARLIN
CALCULATED-DESIGNED BY: WALDO R. LOPEZ
CHECKED BY: WALDO R. LOPEZ
REVISED BY
DATE REVISED

LAST REVISION 08-26-11
DATE PLOTTED => 09-DEC-2011
TIME PLOTTED => 10:00

Dist	COUNTY	ROUTE	POST MILES TOTAL PROJECT	SHEET No.	TOTAL SHEETS
11	SD	54,805	1.8,5.5/9.4	79	635

REGISTERED CIVIL ENGINEER 08-25-11 DATE

12-5-11
PLANS APPROVAL DATE

REGISTERED PROFESSIONAL ENGINEER
WALDO LOPEZ
No. C58085
Exp. 6-30-12
CIVIL
STATE OF CALIFORNIA

THE STATE OF CALIFORNIA OR ITS OFFICERS OR AGENTS SHALL NOT BE RESPONSIBLE FOR THE ACCURACY OR COMPLETENESS OF SCANNED COPIES OF THIS PLAN SHEET.

NOTE:

FOR ACCURATE RIGHT OF WAY DATA, CONTACT RIGHT OF WAY ENGINEERING AT THE DISTRICT OFFICE.

LEGEND:

---------- BIOSWALE

ESA — ENVIRONMENTALLY SENSITIVE AREA

TFESA — TEMPORARY FENCE ENVIRONMENTALLY SENSITIVE AREA

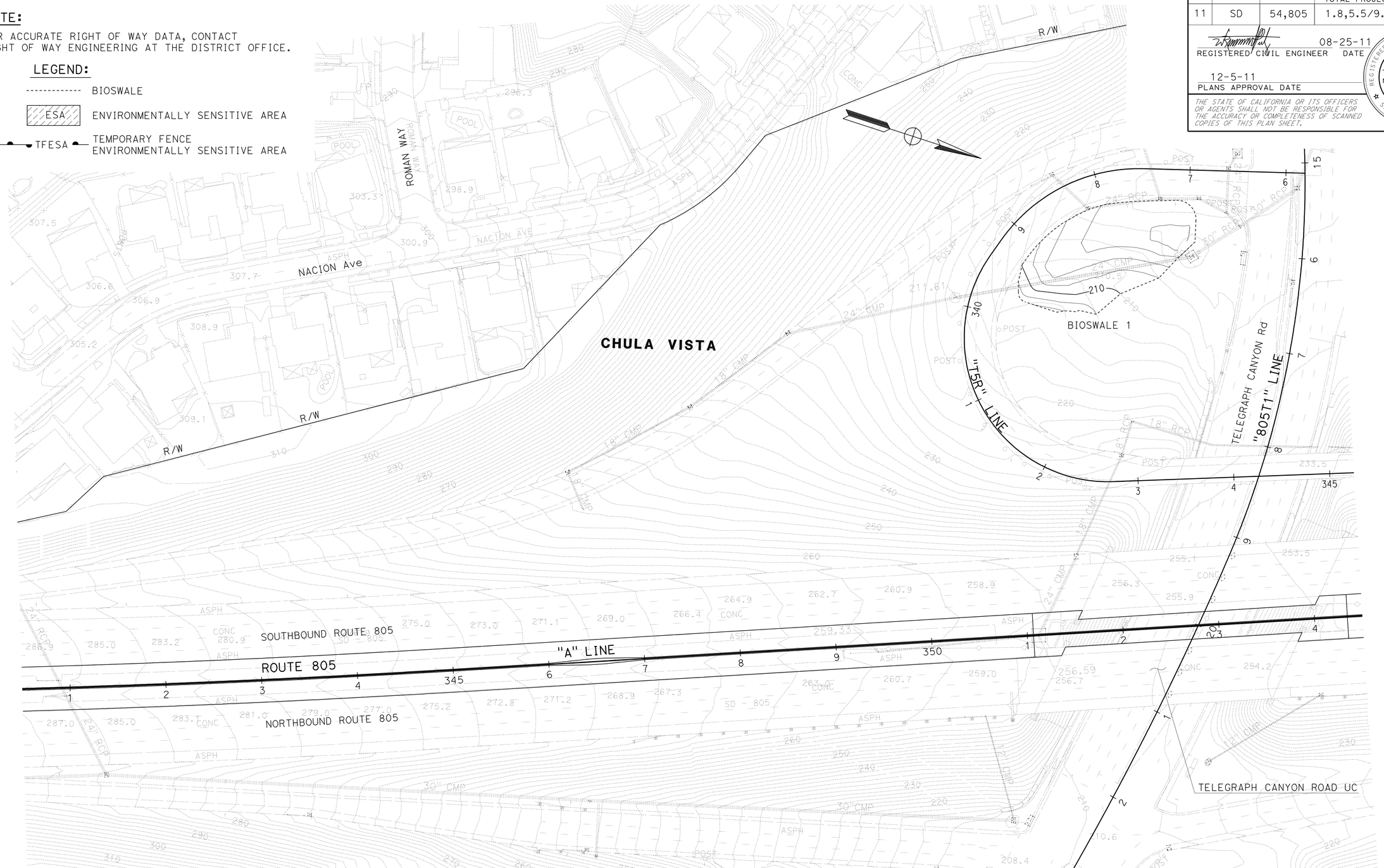

CONTOUR GRADING

SCALE: 1" = 50'

G-1

APPROVED FOR CONTOUR GRADING WORK ONLY

STATE OF CALIFORNIA - DEPARTMENT OF TRANSPORTATION
Caltrans PROJECT DEVELOPMENT

FUNCTIONAL SUPERVISOR: ROGER CARLIN

CALCULATED-DESIGNED BY: WALDO R. LOPEZ
CHECKED BY: WALDO R. LOPEZ

REVISED BY | DATE REVISED

LAST REVISION 08-26-11
DATE PLOTTED => 09-DEC-2011
TIME PLOTTED => 10:01

Dist	COUNTY	ROUTE	POST MILES TOTAL PROJECT	SHEET No.	TOTAL SHEETS
11	SD	54,805	1.8,5.5/9.4	80	635

08-25-11
REGISTERED CIVIL ENGINEER DATE

12-5-11
PLANS APPROVAL DATE

REGISTERED PROFESSIONAL ENGINEER
WALDO LOPEZ
No. C58085
Exp. 6-30-12
CIVIL
STATE OF CALIFORNIA

THE STATE OF CALIFORNIA OR ITS OFFICERS OR AGENTS SHALL NOT BE RESPONSIBLE FOR THE ACCURACY OR COMPLETENESS OF SCANNED COPIES OF THIS PLAN SHEET.

NOTE:

FOR ACCURATE RIGHT OF WAY DATA, CONTACT RIGHT OF WAY ENGINEERING AT THE DISTRICT OFFICE.

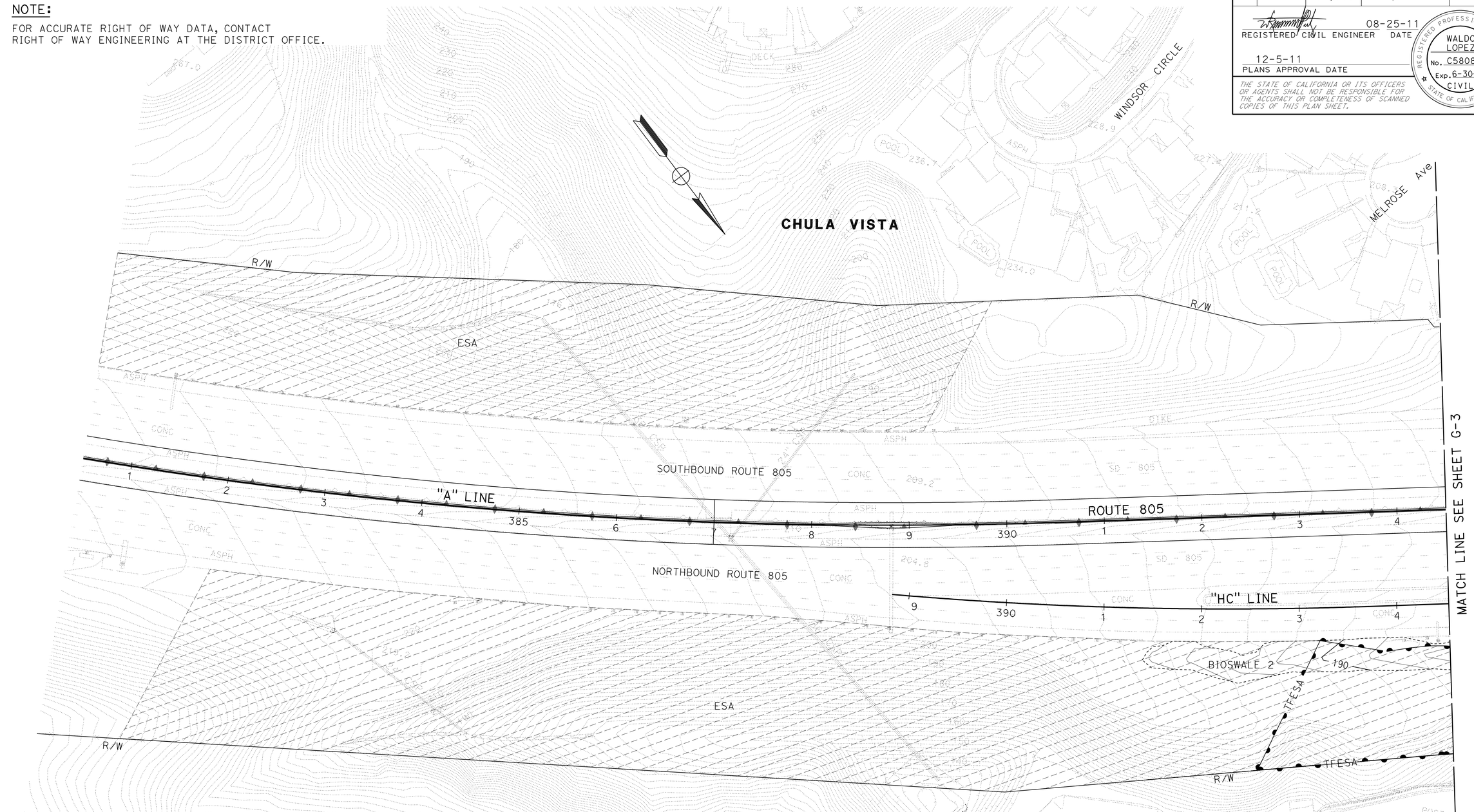

CONTOUR GRADING

SCALE: 1" = 50'

G-2

APPROVED FOR CONTOUR GRADING WORK ONLY

STATE OF CALIFORNIA - DEPARTMENT OF TRANSPORTATION
Caltrans PROJECT DEVELOPMENT

FUNCTIONAL SUPERVISOR: ROGER CARLIN

CALCULATED-DESIGNED BY: WALDO R. LOPEZ
CHECKED BY: WALDO R. LOPEZ

REVISED BY
DATE REVISED

LAST REVISION 08-26-11
DATE PLOTTED => 09-DEC-2011
TIME PLOTTED => 10:01

Dist	COUNTY	ROUTE	POST MILES TOTAL PROJECT	SHEET No.	TOTAL SHEETS
11	SD	54,805	1.8,5.5/9.4	81	635

REGISTERED CIVIL ENGINEER 08-25-11 DATE

12-5-11
PLANS APPROVAL DATE

REGISTERED PROFESSIONAL ENGINEER WALDO LOPEZ No. C58085 Exp. 6-30-12 CIVIL STATE OF CALIFORNIA

THE STATE OF CALIFORNIA OR ITS OFFICERS OR AGENTS SHALL NOT BE RESPONSIBLE FOR THE ACCURACY OR COMPLETENESS OF SCANNED COPIES OF THIS PLAN SHEET.

NOTE:

FOR ACCURATE RIGHT OF WAY DATA, CONTACT RIGHT OF WAY ENGINEERING AT THE DISTRICT OFFICE.

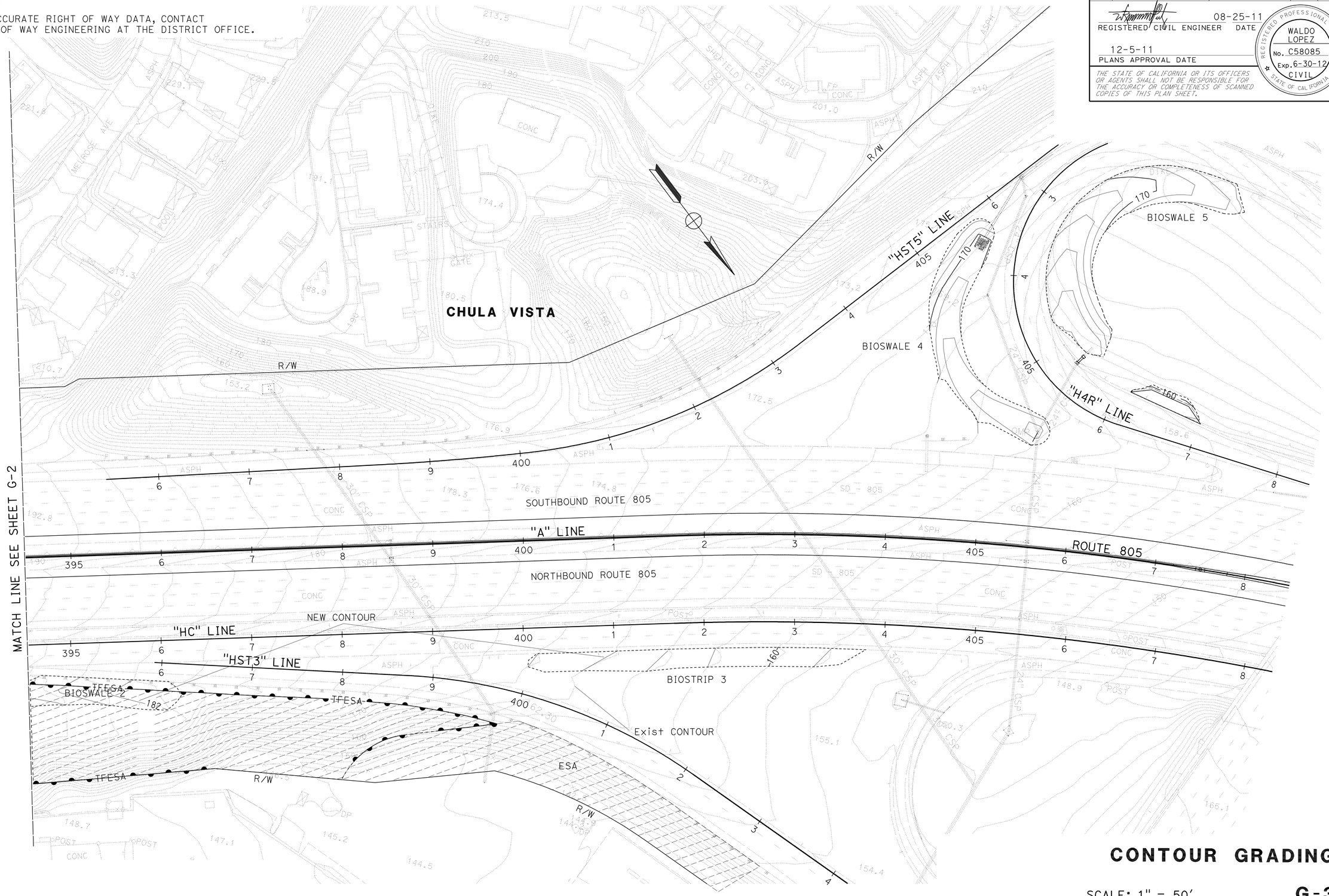

CONTOUR GRADING

SCALE: 1" = 50'

G-3

APPROVED FOR CONTOUR GRADING WORK ONLY

STATE OF CALIFORNIA - DEPARTMENT OF TRANSPORTATION
Caltrans PROJECT DEVELOPMENT

FUNCTIONAL SUPERVISOR: ROGER CARLIN
CALCULATED-DESIGNED BY: WALDO R. LOPEZ
CHECKED BY: WALDO R. LOPEZ
REVISED BY
DATE REVISED

LAST REVISION 08-26-11
DATE PLOTTED => 09-DEC-2011
TIME PLOTTED => 10:01

Dist	COUNTY	ROUTE	POST MILES TOTAL PROJECT	SHEET No.	TOTAL SHEETS
11	SD	54,805	1.8,5.5/9.4	82	635

REGISTERED CIVIL ENGINEER 08-25-11 DATE

12-5-11
PLANS APPROVAL DATE

REGISTERED PROFESSIONAL ENGINEER
WALDO LOPEZ
No. C58085
Exp. 6-30-12
CIVIL
STATE OF CALIFORNIA

THE STATE OF CALIFORNIA OR ITS OFFICERS OR AGENTS SHALL NOT BE RESPONSIBLE FOR THE ACCURACY OR COMPLETENESS OF SCANNED COPIES OF THIS PLAN SHEET.

NOTE:

FOR ACCURATE RIGHT OF WAY DATA, CONTACT RIGHT OF WAY ENGINEERING AT THE DISTRICT OFFICE.

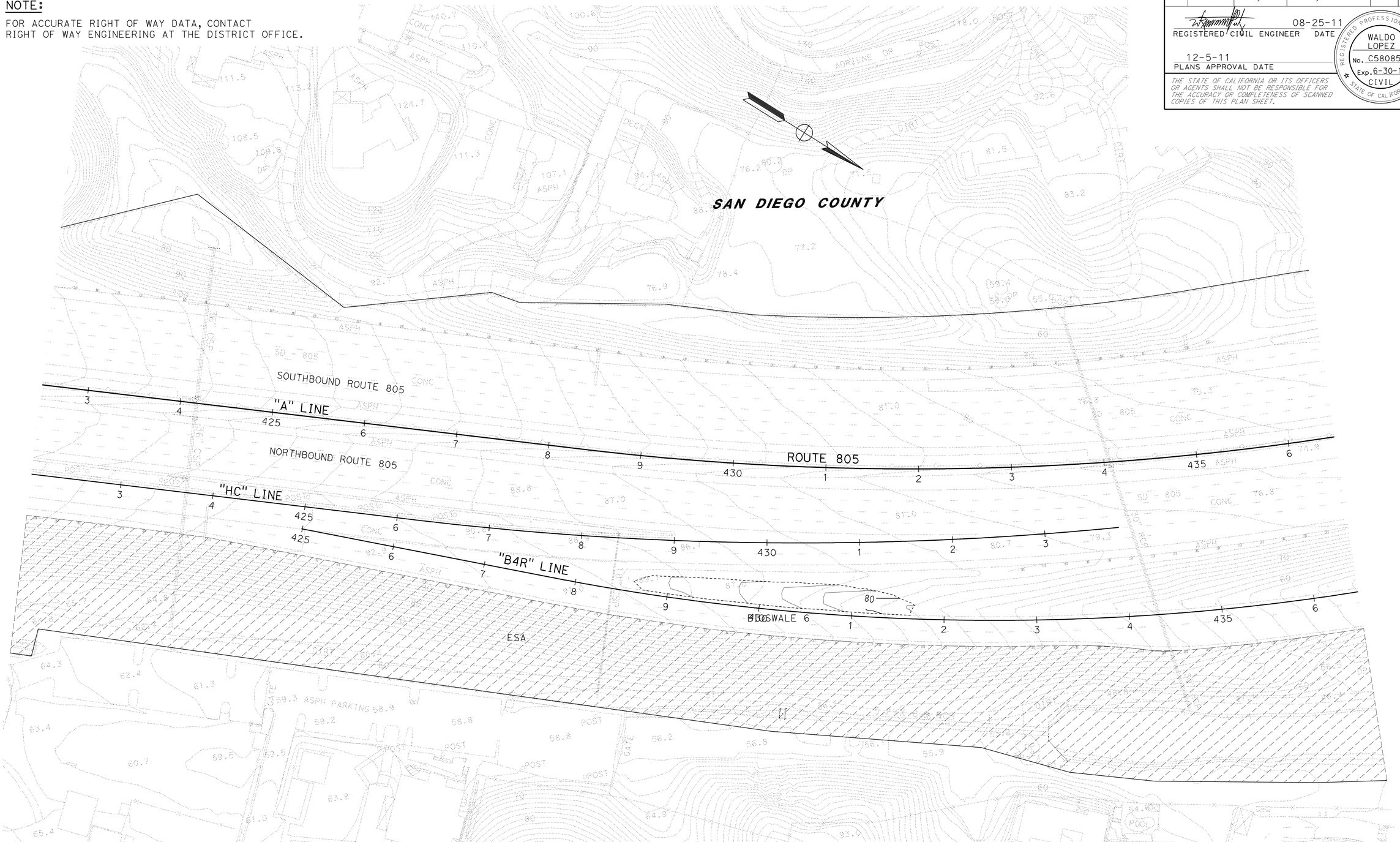

CONTOUR GRADING

SCALE: 1" = 50'

G-4

APPROVED FOR CONTOUR GRADING WORK ONLY

STATE OF CALIFORNIA - DEPARTMENT OF TRANSPORTATION
Caltrans PROJECT DEVELOPMENT

FUNCTIONAL SUPERVISOR: ROGER CARLIN

CALCULATED-DESIGNED BY: WALDO R. LOPEZ
CHECKED BY: WALDO R. LOPEZ
REVISED BY
DATE REVISED

LAST REVISION DATE PLOTTED => 09-DEC-2011
08-26-11 TIME PLOTTED => 10:01

Dist	COUNTY	ROUTE	POST MILES TOTAL PROJECT	SHEET No.	TOTAL SHEETS
11	SD	54,805	1.8,5.5/9.4	83	635

REGISTERED CIVIL ENGINEER 08-29-11 DATE

12-5-11
PLANS APPROVAL DATE

REGISTERED PROFESSIONAL ENGINEER MATTHEW T. MCCARTHY No. C77228 Exp. 6-30-13 CIVIL STATE OF CALIFORNIA

THE STATE OF CALIFORNIA OR ITS OFFICERS OR AGENTS SHALL NOT BE RESPONSIBLE FOR THE ACCURACY OR COMPLETENESS OF SCANNED COPIES OF THIS PLAN SHEET.

CH2M HILL
402 W. BROADWAY,
SUITE 1450
SAN DIEGO, CA 92101

NOTES:

1. FOR ACCURATE RIGHT OF WAY AND ACCESS DATA, CONTACT RIGHT OF WAY ENGINEERING AT THE DISTRICT OFFICE.
2. CONTRACTOR SHALL PLACE ONE REMOVABLE GRATE AT THE UPSTREAM END OF EACH GRATED LINE DRAIN INSTALLATION, THEN ADDITIONAL REMOVABLE GRATES AT A SPACING OF 50' FEET THEREAFTER.
3. ALL GRATED LINE DRAIN SHALL BE PRE-SLOPED AT 0.6% AND CHANNEL AT INLET SHALL BE A MINIMUM OF 12 INCHES DEEP.
4. HORIZONTAL LOCATIONS OF EXISTING STORM DRAINS ARE BASED ON BEST AVAILABLE INFORMATION. CONTRACTOR SHALL VERIFY LOCATIONS AND ELEVATIONS OF ALL STORM DRAINS PRIOR TO CONSTRUCTION AND REPORT ALL MAJOR DISCREPANCIES TO THE RESIDENT ENGINEER.
5. NEW DRAINAGE INLETS SHALL BE CONNECTED TO EXISTING CSP RISERS USING STANDARD PLAN D93B.
6. NEW DRAINAGE INLETS LOCATED ADJACENT TO Conc BARRIER SHALL BE CONSTRUCTED ACCORDING TO CASE 1, INLET AT Conc BARRIER, UNLESS OTHERWISE SPECIFIED. SEE DRAINAGE DETAILS.
6. NEW DRAINAGE INLETS LOCATED ADJACENT TO WALLS SHALL BE CONSTRUCTED ACCORDING TO CASE 4 OR CASE 5, INLET AT WALL, UNLESS OTHERWISE SPECIFIED. SEE DRAINAGE DETAILS.

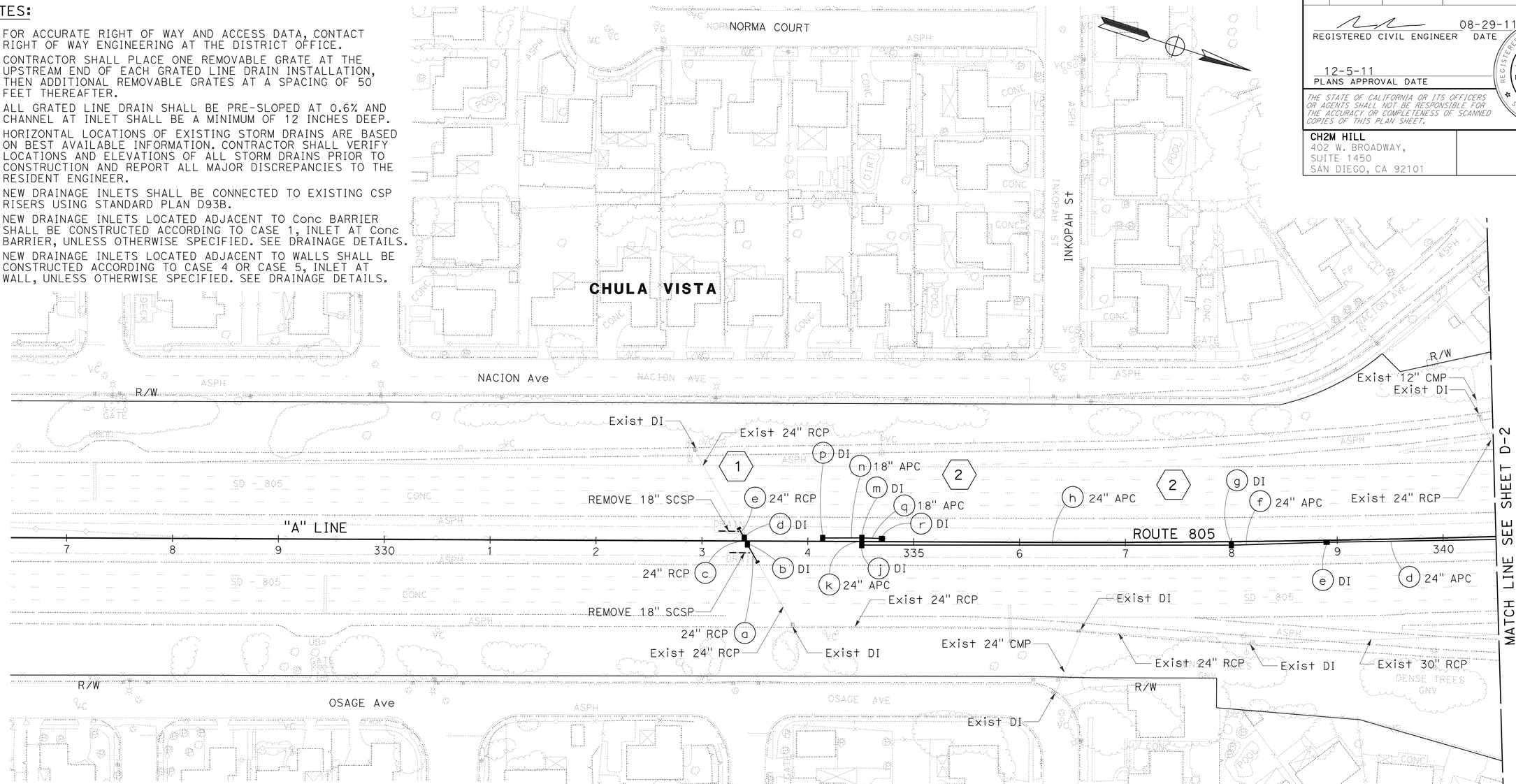

LEGEND:

- DRAINAGE SYSTEM No.
- DRAINAGE UNIT No.
- EXISTING INLET
- NEW DOUBLE INLET
- NEW SINGLE INLET
- REMOVE/ABANDON PIPE OR SCSP
- ESA — ENVIRONMENTALLY SENSITIVE AREA
- TEMPORARY FENCE, TYPE ESA

ABBREVIATIONS:

GLD	GRATED LINE DRAIN
Pos	POSITIVE
TFESA	TEMPORARY FENCE, TYPE ESA
Wa	WATERTIGHT

DRAINAGE PLAN

SCALE: 1" = 50'

D-1

APPROVED FOR DRAINAGE WORK ONLY

STATE OF CALIFORNIA - DEPARTMENT OF TRANSPORTATION

CONSULTANT FUNCTIONAL SUPERVISOR: HANY HAROUN

CALCULATED-DESIGNED BY: JANICE REGUYAL

CHECKED BY: BENJAMIN ESPIRITU

REVISED BY / DATE REVISED

LAST REVISION 08-29-11

DATE PLOTTED => 09-DEC-2011
TIME PLOTTED => 10:01

Dist	COUNTY	ROUTE	POST MILES TOTAL PROJECT	SHEET No.	TOTAL SHEETS
11	SD	54,805	1.8,5.5/9.4	84	635

REGISTERED CIVIL ENGINEER 08-29-11 DATE

12-5-11
PLANS APPROVAL DATE

REGISTERED PROFESSIONAL ENGINEER MATTHEW T. MCCARTHY No. C77228 Exp. 6-30-13 CIVIL STATE OF CALIFORNIA

THE STATE OF CALIFORNIA OR ITS OFFICERS OR AGENTS SHALL NOT BE RESPONSIBLE FOR THE ACCURACY OR COMPLETENESS OF SCANNED COPIES OF THIS PLAN SHEET.

CH2M HILL
402 W. BROADWAY,
SUITE 1450
SAN DIEGO, CA 92101

NOTE:

1. FOR ACCURATE RIGHT OF WAY AND ACCESS DATA, CONTACT RIGHT OF WAY ENGINEERING AT THE DISTRICT OFFICE.

BIOSWALE CURVE DATA

No.	R	Δ	T	L
1	86.93′	73°26′25″	64.85′	111.43′

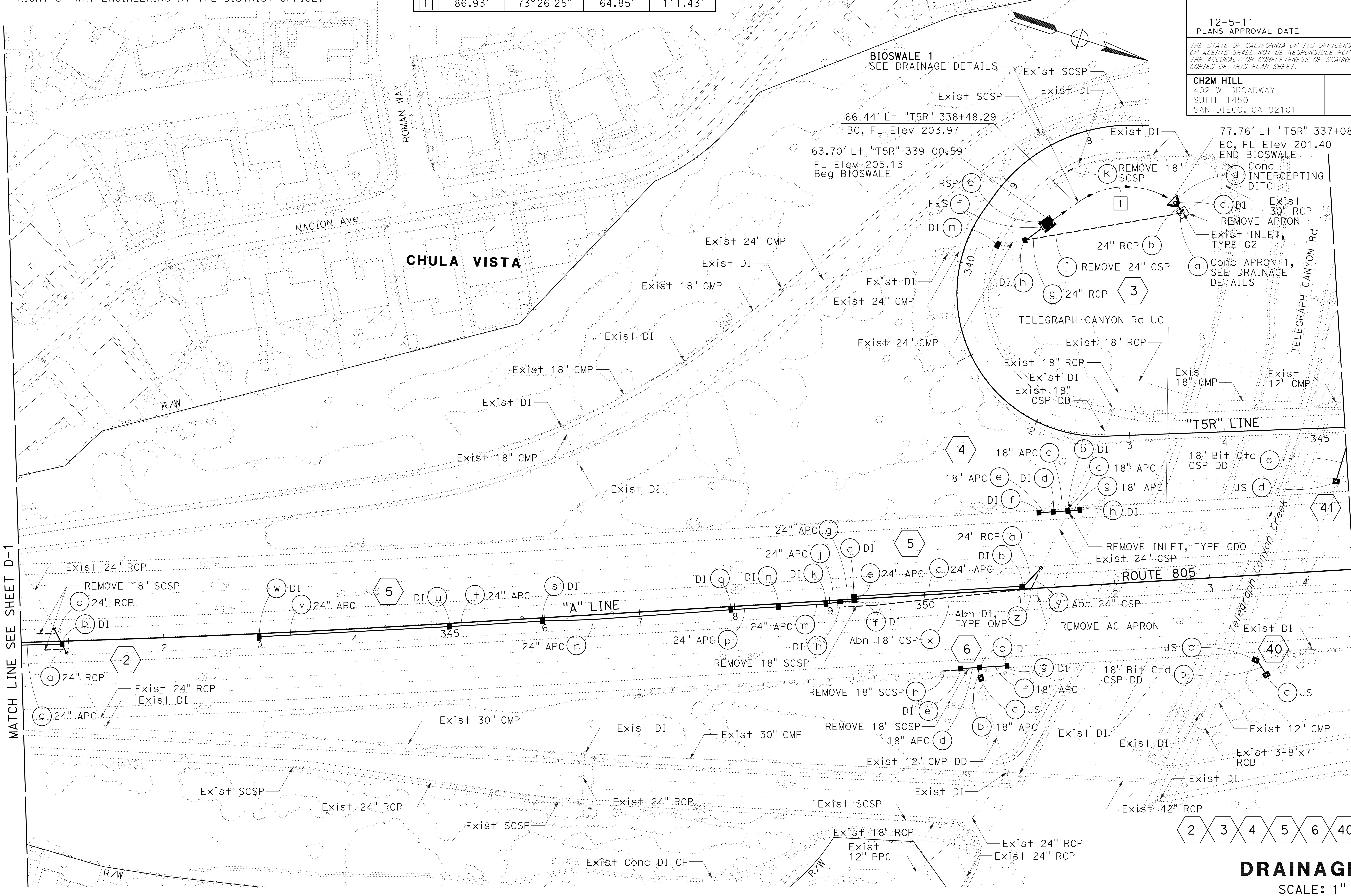

2 3 4 5 6 40 41

DRAINAGE PLAN

SCALE: 1" = 50′

D-2

APPROVED FOR DRAINAGE WORK ONLY

STATE OF CALIFORNIA - DEPARTMENT OF TRANSPORTATION
Caltrans

CONSULTANT FUNCTIONAL SUPERVISOR	HANY HAROUN
CALCULATED-DESIGNED BY	BENJAMIN ESPIRITU
CHECKED BY	JANICE REGUYAL
REVISED BY	
DATE REVISED	

Dist	COUNTY	ROUTE	POST MILES TOTAL PROJECT	SHEET No.	TOTAL SHEETS
11	SD	54,805	1.8,5.5/9.4	85	635

REGISTERED CIVIL ENGINEER 08-29-11 DATE

12-5-11
PLANS APPROVAL DATE

REGISTERED PROFESSIONAL ENGINEER MATTHEW T. MCCARTHY No. C77228 Exp. 6-30-13 CIVIL STATE OF CALIFORNIA

THE STATE OF CALIFORNIA OR ITS OFFICERS OR AGENTS SHALL NOT BE RESPONSIBLE FOR THE ACCURACY OR COMPLETENESS OF SCANNED COPIES OF THIS PLAN SHEET.

CH2M HILL
402 W. BROADWAY,
SUITE 1450
SAN DIEGO, CA 92101

NOTE:

1. FOR ACCURATE RIGHT OF WAY AND ACCESS DATA, CONTACT RIGHT OF WAY ENGINEERING AT THE DISTRICT OFFICE.

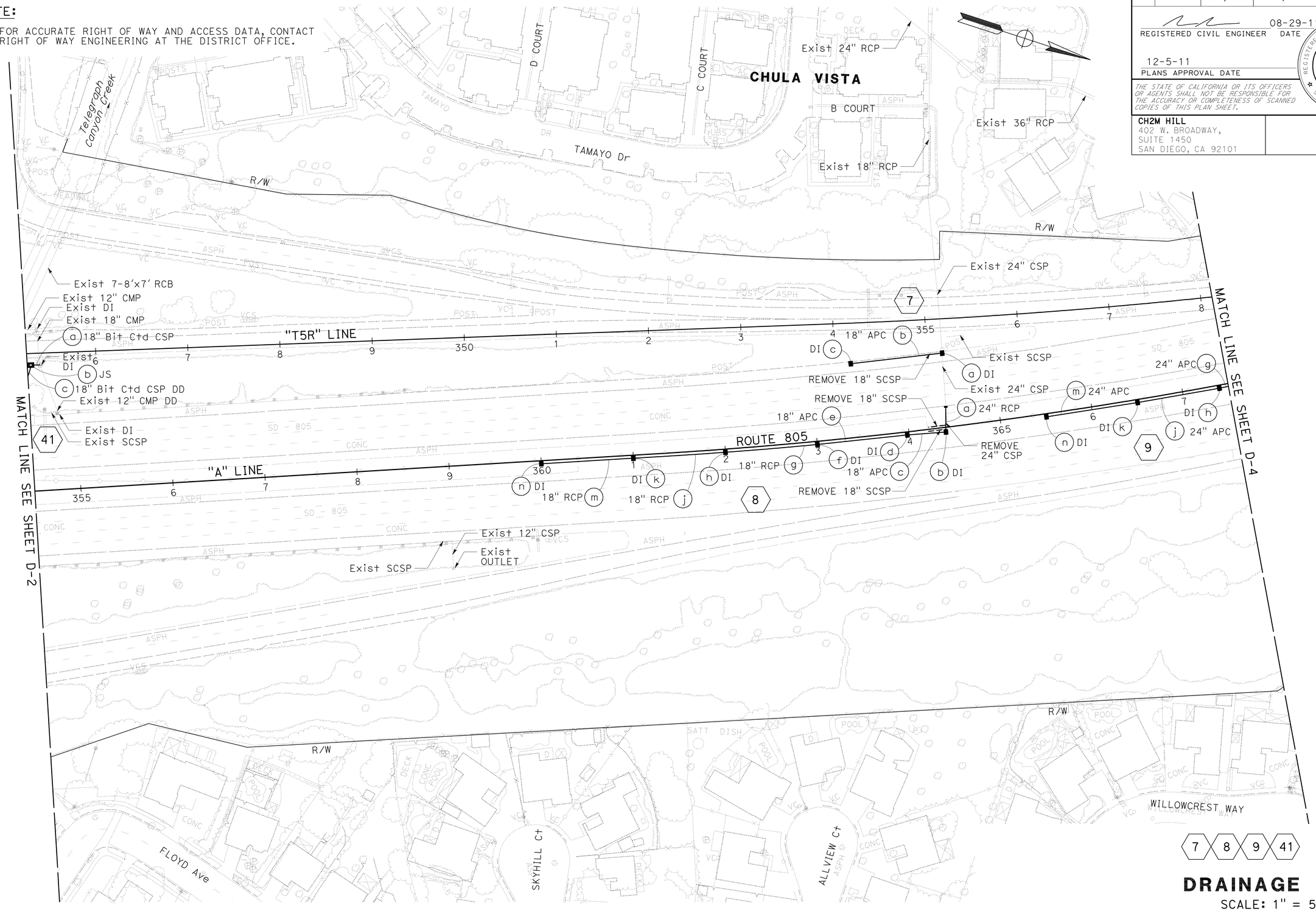

APPROVED FOR DRAINAGE WORK ONLY

DRAINAGE PLAN

SCALE: 1" = 50'

D-3

STATE OF CALIFORNIA - DEPARTMENT OF TRANSPORTATION

Caltrans

CONSULTANT FUNCTIONAL SUPERVISOR: HANY HAROUN

CALCULATED-DESIGNED BY: BENJAMIN ESPIRITU

CHECKED BY: JANICE REGUYAL

REVISED BY

DATE REVISED

LAST REVISION 08-29-11 DATE PLOTTED => 11-JAN-2012 TIME PLOTTED => 08:15

Dist	COUNTY	ROUTE	POST MILES TOTAL PROJECT	SHEET No.	TOTAL SHEETS
11	SD	54,805	1.8,5.5/9.4	86	635

REGISTERED CIVIL ENGINEER 08-29-11 DATE

12-5-11
PLANS APPROVAL DATE

REGISTERED PROFESSIONAL ENGINEER MATTHEW T. MCCARTHY No. C77228 Exp. 6-30-13 CIVIL STATE OF CALIFORNIA

THE STATE OF CALIFORNIA OR ITS OFFICERS OR AGENTS SHALL NOT BE RESPONSIBLE FOR THE ACCURACY OR COMPLETENESS OF SCANNED COPIES OF THIS PLAN SHEET.

CH2M HILL
402 W. BROADWAY,
SUITE 1450
SAN DIEGO, CA 92101

NOTE:

1. FOR ACCURATE RIGHT OF WAY AND ACCESS DATA, CONTACT RIGHT OF WAY ENGINEERING AT THE DISTRICT OFFICE.

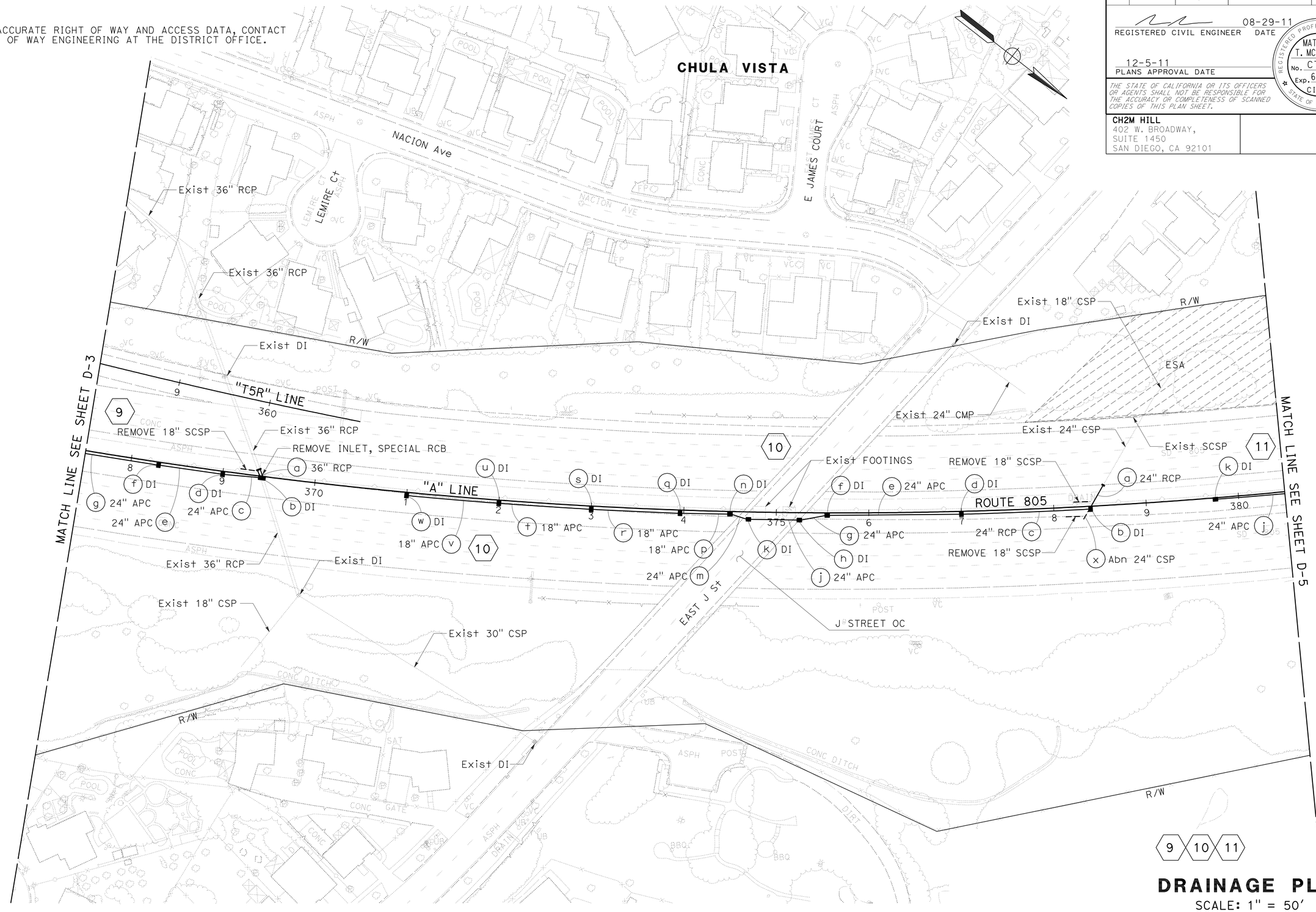

DRAINAGE PLAN

SCALE: 1" = 50'

D-4

APPROVED FOR DRAINAGE WORK ONLY

STATE OF CALIFORNIA - DEPARTMENT OF TRANSPORTATION

Caltrans

CONSULTANT FUNCTIONAL SUPERVISOR: HANY HAROUN

CALCULATED-DESIGNED BY: BENJAMIN ESPIRITU

CHECKED BY: JANICE REGUYAL

REVISED BY / DATE REVISED

LAST REVISION 08-29-11 DATE PLOTTED => 09-DEC-2011 TIME PLOTTED => 10:02

Dist	COUNTY	ROUTE	POST MILES TOTAL PROJECT	SHEET No.	TOTAL SHEETS
11	SD	54,805	1.8,5.5/9.4	87	635

REGISTERED CIVIL ENGINEER 08-29-11 DATE

12-5-11
PLANS APPROVAL DATE

REGISTERED PROFESSIONAL ENGINEER MATTHEW T. MCCARTHY No. C77228 Exp. 6-30-13 CIVIL STATE OF CALIFORNIA

THE STATE OF CALIFORNIA OR ITS OFFICERS OR AGENTS SHALL NOT BE RESPONSIBLE FOR THE ACCURACY OR COMPLETENESS OF SCANNED COPIES OF THIS PLAN SHEET.

CH2M HILL
402 W. BROADWAY,
SUITE 1450
SAN DIEGO, CA 92101

NOTE:

1. FOR ACCURATE RIGHT OF WAY AND ACCESS DATA, CONTACT RIGHT OF WAY ENGINEERING AT THE DISTRICT OFFICE.

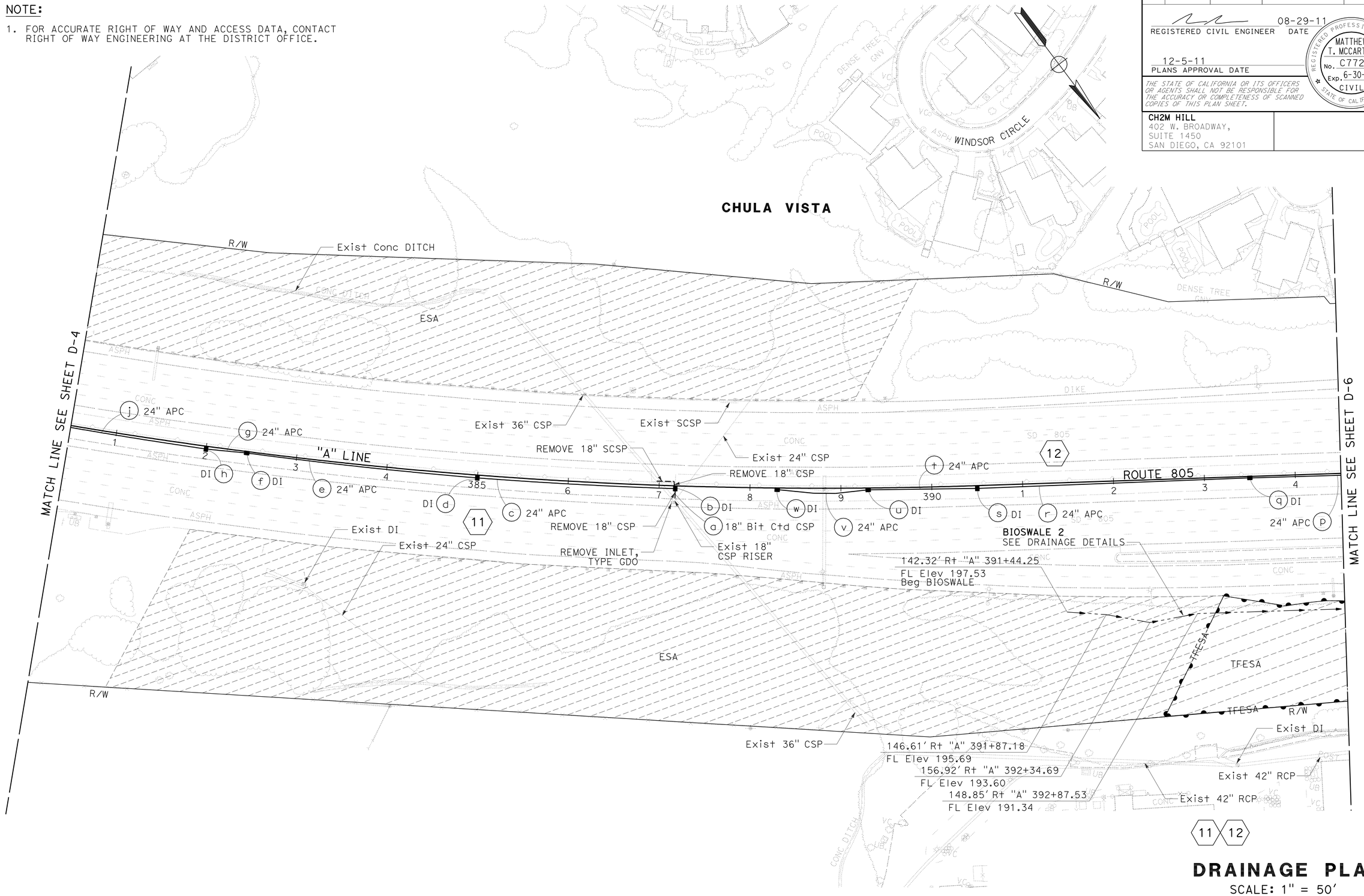

DRAINAGE PLAN

SCALE: 1" = 50'

D-5

APPROVED FOR DRAINAGE WORK ONLY

REVISED BY	DATE REVISED
BENJAMIN ESPIRITU	JANICE REGUYAL

CALCULATED-DESIGNED BY / CHECKED BY

CONSULTANT FUNCTIONAL SUPERVISOR: HANY HAROUN

STATE OF CALIFORNIA - DEPARTMENT OF TRANSPORTATION

Caltrans

LAST REVISION 08-29-11 DATE PLOTTED => 09-DEC-2011 TIME PLOTTED => 10:02

Dist	COUNTY	ROUTE	POST MILES TOTAL PROJECT	SHEET No.	TOTAL SHEETS
11	SD	54,805	1.8,5.5/9.4	88	635

REGISTERED CIVIL ENGINEER 08-29-11 DATE

12-5-11
PLANS APPROVAL DATE

REGISTERED PROFESSIONAL ENGINEER MATTHEW T. MCCARTHY No. C77228 Exp. 6-30-13 CIVIL STATE OF CALIFORNIA

THE STATE OF CALIFORNIA OR ITS OFFICERS OR AGENTS SHALL NOT BE RESPONSIBLE FOR THE ACCURACY OR COMPLETENESS OF SCANNED COPIES OF THIS PLAN SHEET.

CH2M HILL
402 W. BROADWAY,
SUITE 1450
SAN DIEGO, CA 92101

NOTE:

1. FOR ACCURATE RIGHT OF WAY AND ACCESS DATA, CONTACT RIGHT OF WAY ENGINEERING AT THE DISTRICT OFFICE.

BIOSWALE CURVE DATA

No.	R	Δ	T	L
2	100.000	88°56'03"	98.16	155.22
3	106.000	155°56'59"	497.62	288.51

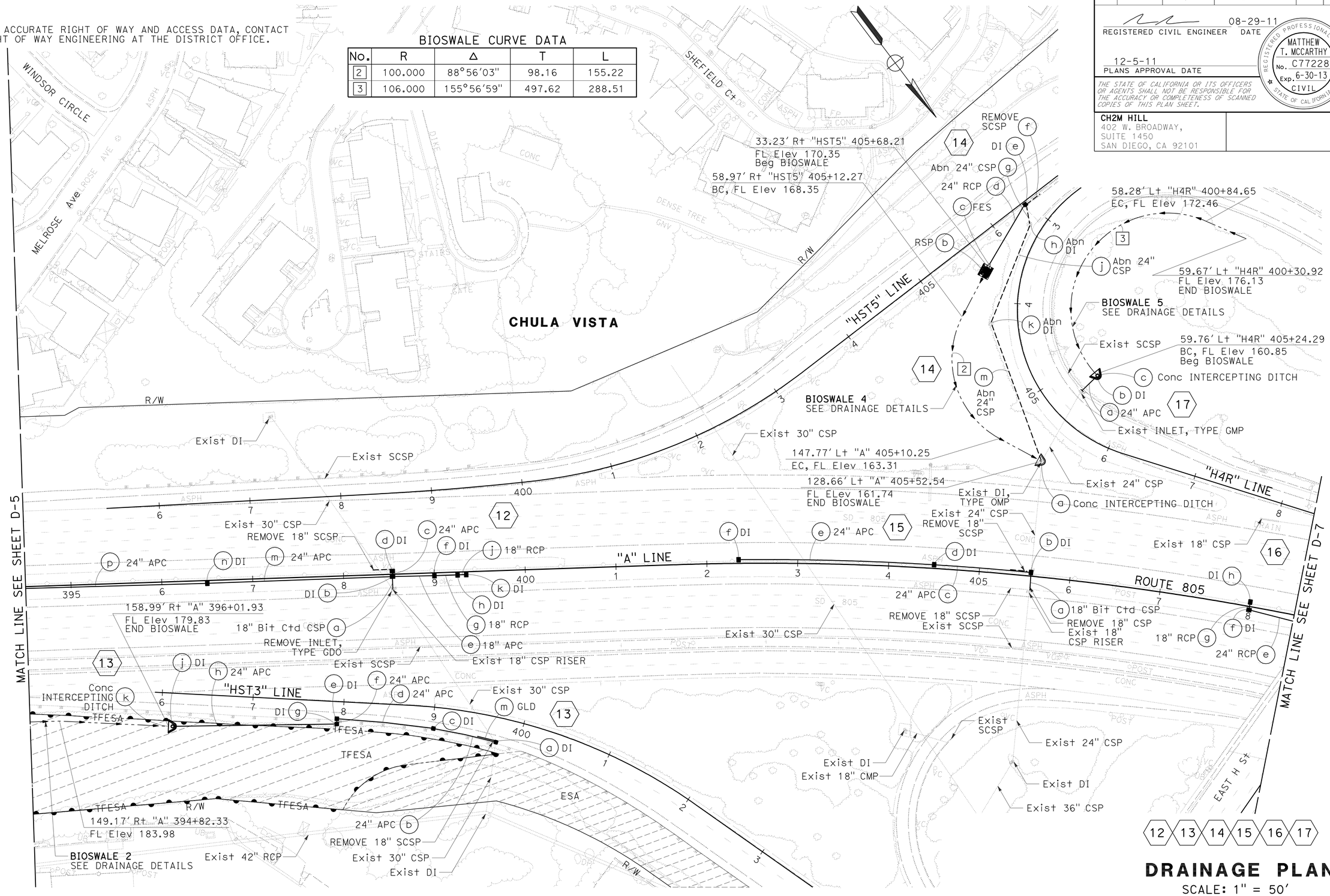

DRAINAGE PLAN

SCALE: 1" = 50'

APPROVED FOR DRAINAGE WORK ONLY

D-6

STATE OF CALIFORNIA - DEPARTMENT OF TRANSPORTATION

CONSULTANT FUNCTIONAL SUPERVISOR: HANY HAROUN

CALCULATED-DESIGNED BY: BENJAMIN ESPIRITU

CHECKED BY: JANICE REGUYAL

REVISED BY / DATE REVISED

LAST REVISION 08-29-11 DATE PLOTTED => 09-DEC-2011 TIME PLOTTED => 10:02

Dist	COUNTY	ROUTE	POST MILES TOTAL PROJECT	SHEET No.	TOTAL SHEETS
11	SD	54,805	1.8,5.5/9.4	89	635

08-29-11
REGISTERED CIVIL ENGINEER DATE

12-5-11
PLANS APPROVAL DATE

REGISTERED PROFESSIONAL ENGINEER MATTHEW T. MCCARTHY No. C77228 Exp. 6-30-13 CIVIL STATE OF CALIFORNIA

THE STATE OF CALIFORNIA OR ITS OFFICERS OR AGENTS SHALL NOT BE RESPONSIBLE FOR THE ACCURACY OR COMPLETENESS OF SCANNED COPIES OF THIS PLAN SHEET.

CH2M HILL
402 W. BROADWAY,
SUITE 1450
SAN DIEGO, CA 92101

NOTE:

1. FOR ACCURATE RIGHT OF WAY AND ACCESS DATA, CONTACT RIGHT OF WAY ENGINEERING AT THE DISTRICT OFFICE.

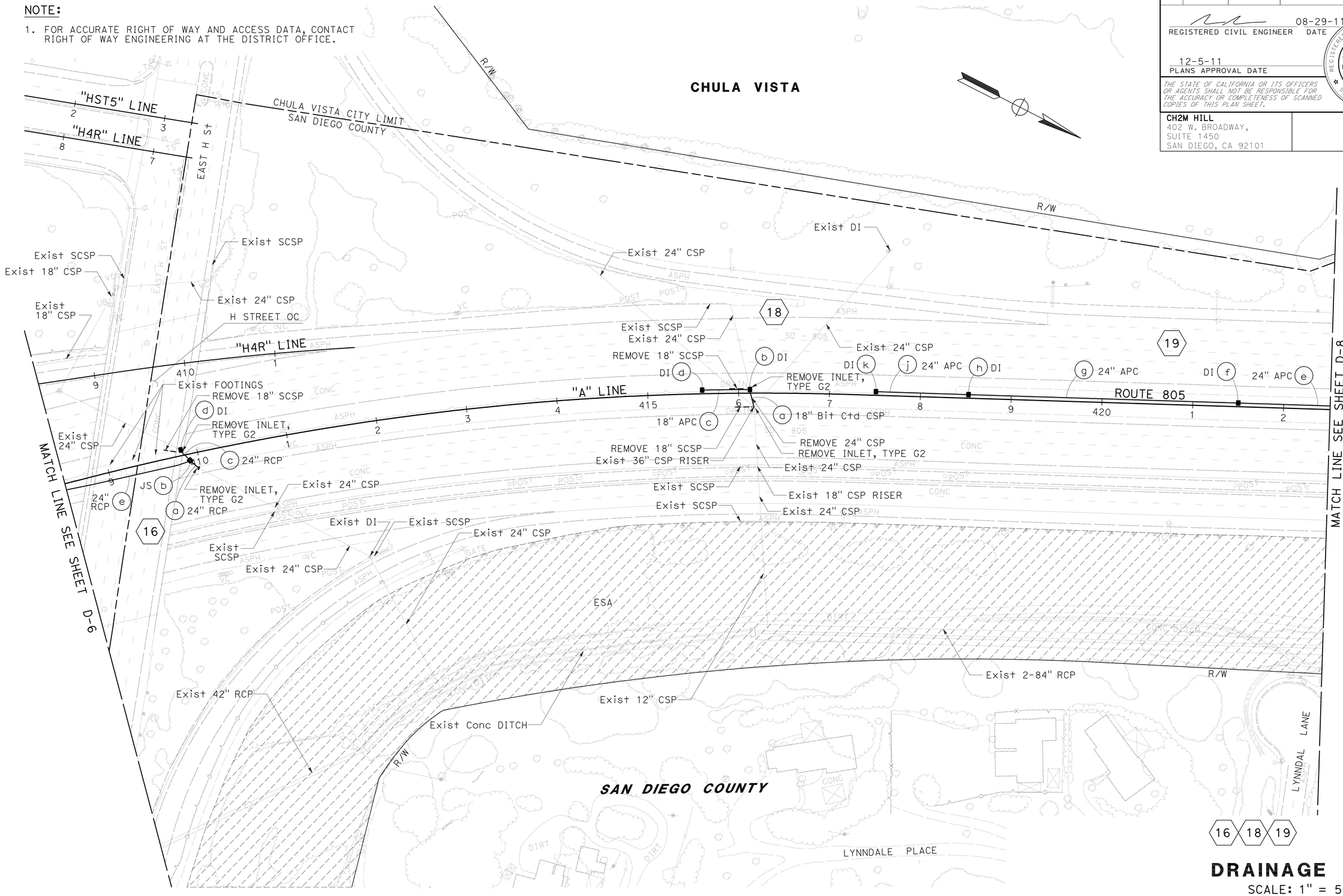

APPROVED FOR DRAINAGE WORK ONLY

DRAINAGE PLAN

SCALE: 1" = 50'

D-7

STATE OF CALIFORNIA - DEPARTMENT OF TRANSPORTATION

Caltrans

CONSULTANT FUNCTIONAL SUPERVISOR: HANY HAROUN

CALCULATED-DESIGNED BY: BENJAMIN ESPIRITU

CHECKED BY: JANICE REGUYAL

REVISED BY

DATE REVISED

LAST REVISION 08-29-11 | DATE PLOTTED => 09-DEC-2011 | TIME PLOTTED => 10:02

Dist	COUNTY	ROUTE	POST MILES TOTAL PROJECT	SHEET No.	TOTAL SHEETS
11	SD	54,805	1.8,5.5/9.4	90	635

08-29-11
REGISTERED CIVIL ENGINEER DATE

12-5-11
PLANS APPROVAL DATE

REGISTERED PROFESSIONAL ENGINEER MATTHEW T. MCCARTHY No. C77228 Exp. 6-30-13 CIVIL STATE OF CALIFORNIA

THE STATE OF CALIFORNIA OR ITS OFFICERS OR AGENTS SHALL NOT BE RESPONSIBLE FOR THE ACCURACY OR COMPLETENESS OF SCANNED COPIES OF THIS PLAN SHEET.

CH2M HILL
402 W. BROADWAY,
SUITE 1450
SAN DIEGO, CA 92101

NOTE:

1. FOR ACCURATE RIGHT OF WAY AND ACCESS DATA, CONTACT RIGHT OF WAY ENGINEERING AT THE DISTRICT OFFICE.

BIOSWALE CURVE DATA

No.	R	Δ	T	L
4	1000.00	2°38′54″	23.11	46.22
5	1000.02	3°37′41″	31.67	63.32
6	2438.32	5°12′49″	111.02	221.88

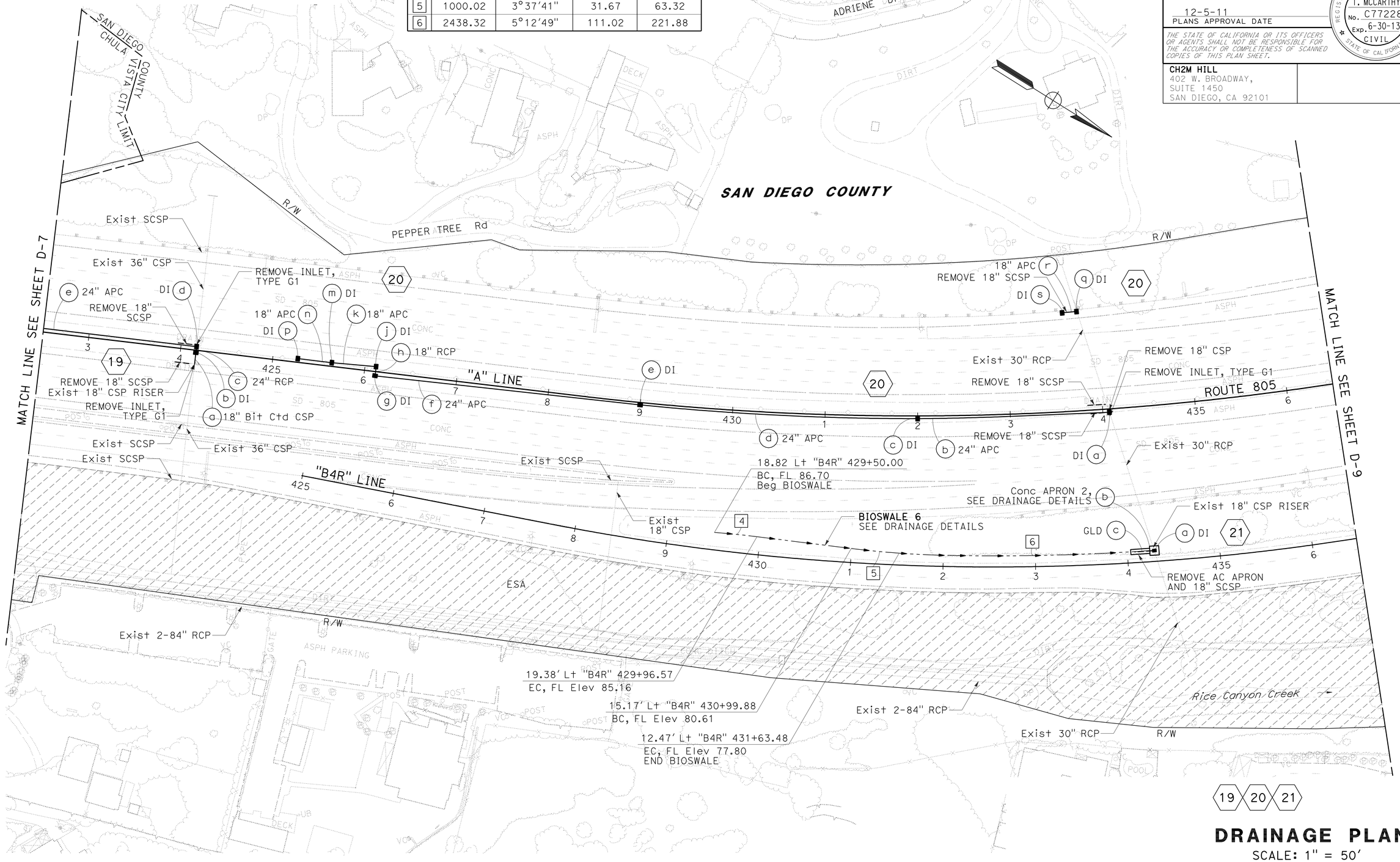

DRAINAGE PLAN

SCALE: 1" = 50′

D-8

APPROVED FOR DRAINAGE WORK ONLY

STATE OF CALIFORNIA - DEPARTMENT OF TRANSPORTATION
Caltrans

CONSULTANT FUNCTIONAL SUPERVISOR: HANY HAROUN
CALCULATED-DESIGNED BY: BENJAMIN ESPIRITU
CHECKED BY: JANICE REGUYAL
REVISED BY
DATE REVISED

LAST REVISION 08-29-11
DATE PLOTTED => 09-DEC-2011
TIME PLOTTED => 10:02

Dist	COUNTY	ROUTE	POST MILES TOTAL PROJECT	SHEET No.	TOTAL SHEETS
11	SD	54,805	1.8,5.5/9.4	91	635

08-29-11
REGISTERED CIVIL ENGINEER DATE

12-5-11
PLANS APPROVAL DATE

REGISTERED PROFESSIONAL ENGINEER
MATTHEW T. MCCARTHY
No. C77228
Exp. 6-30-13
CIVIL
STATE OF CALIFORNIA

THE STATE OF CALIFORNIA OR ITS OFFICERS OR AGENTS SHALL NOT BE RESPONSIBLE FOR THE ACCURACY OR COMPLETENESS OF SCANNED COPIES OF THIS PLAN SHEET.

CH2M HILL
402 W. BROADWAY,
SUITE 1450
SAN DIEGO, CA 92101

NOTE:

1. FOR ACCURATE RIGHT OF WAY AND ACCESS DATA, CONTACT RIGHT OF WAY ENGINEERING AT THE DISTRICT OFFICE.

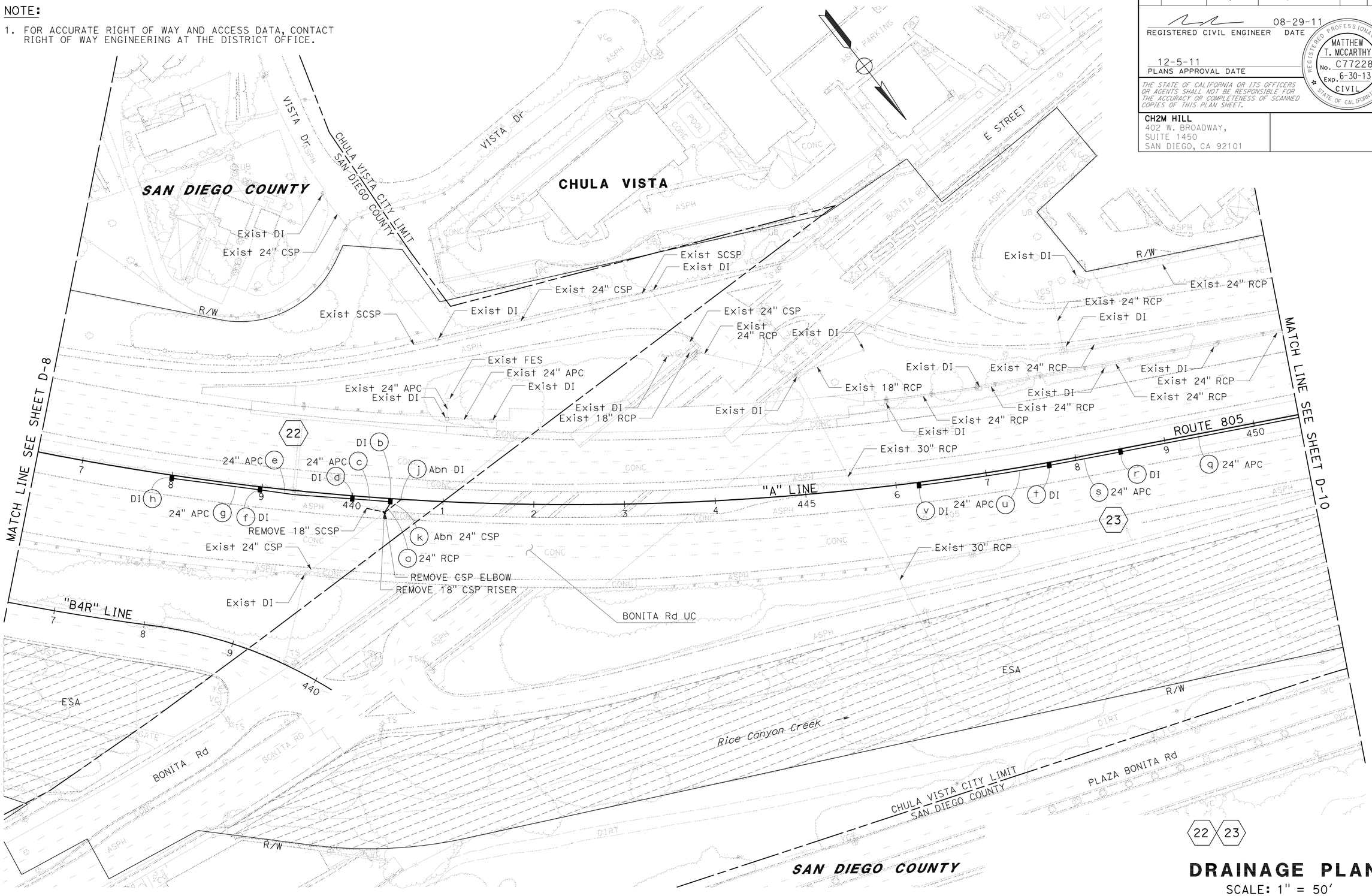

DRAINAGE PLAN

SCALE: 1" = 50'

D-9

APPROVED FOR DRAINAGE WORK ONLY

STATE OF CALIFORNIA - DEPARTMENT OF TRANSPORTATION

Caltrans

CONSULTANT FUNCTIONAL SUPERVISOR: HANY HAROUN

CALCULATED-DESIGNED BY: BENJAMIN ESPIRITU

CHECKED BY: JANICE REGUYAL

REVISED BY

DATE REVISED

LAST REVISION 08-29-11

DATE PLOTTED => 09-DEC-2011
TIME PLOTTED => 10:02

Dist	COUNTY	ROUTE	POST MILES TOTAL PROJECT	SHEET No.	TOTAL SHEETS
11	SD	54,805	1.8,5.5/9.4	92	635

08-29-11
REGISTERED CIVIL ENGINEER DATE

12-5-11
PLANS APPROVAL DATE

REGISTERED PROFESSIONAL ENGINEER
MATTHEW T. MCCARTHY
No. C77228
Exp. 6-30-13
CIVIL
STATE OF CALIFORNIA

THE STATE OF CALIFORNIA OR ITS OFFICERS OR AGENTS SHALL NOT BE RESPONSIBLE FOR THE ACCURACY OR COMPLETENESS OF SCANNED COPIES OF THIS PLAN SHEET.

CH2M HILL
402 W. BROADWAY,
SUITE 1450
SAN DIEGO, CA 92101

NOTE:

1. FOR ACCURATE RIGHT OF WAY AND ACCESS DATA, CONTACT RIGHT OF WAY ENGINEERING AT THE DISTRICT OFFICE.

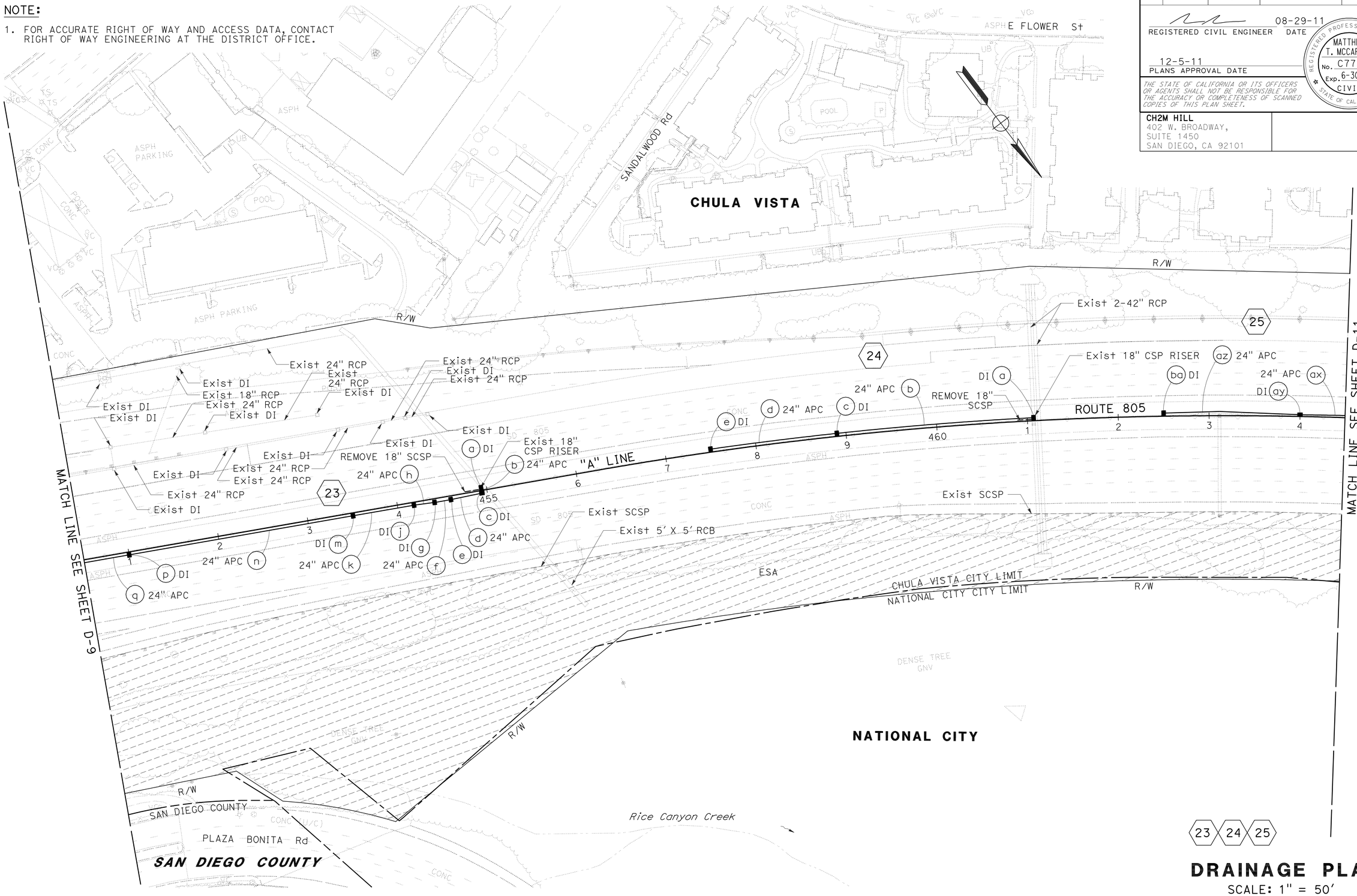

APPROVED FOR DRAINAGE WORK ONLY

DRAINAGE PLAN

SCALE: 1" = 50'

D-10

STATE OF CALIFORNIA - DEPARTMENT OF TRANSPORTATION
Caltrans

CONSULTANT FUNCTIONAL SUPERVISOR: HANY HAROUN
CALCULATED-DESIGNED BY: BENJAMIN ESPIRITU
CHECKED BY: JANICE REGUYAL
REVISED BY
DATE REVISED

LAST REVISION DATE PLOTTED => 09-DEC-2011
08-29-11 TIME PLOTTED => 10:03

Dist	COUNTY	ROUTE	POST MILES TOTAL PROJECT	SHEET No.	TOTAL SHEETS
11	SD	54,805	1.8,5.5/9.4	93	635

REGISTERED CIVIL ENGINEER 08-29-11 DATE

12-5-11
PLANS APPROVAL DATE

REGISTERED PROFESSIONAL ENGINEER MATTHEW T. MCCARTHY No. C77228 Exp. 6-30-13 CIVIL STATE OF CALIFORNIA

THE STATE OF CALIFORNIA OR ITS OFFICERS OR AGENTS SHALL NOT BE RESPONSIBLE FOR THE ACCURACY OR COMPLETENESS OF SCANNED COPIES OF THIS PLAN SHEET.

CH2M HILL
402 W. BROADWAY,
SUITE 1450
SAN DIEGO, CA 92101

NOTE:

1. FOR ACCURATE RIGHT OF WAY AND ACCESS DATA, CONTACT RIGHT OF WAY ENGINEERING AT THE DISTRICT OFFICE.

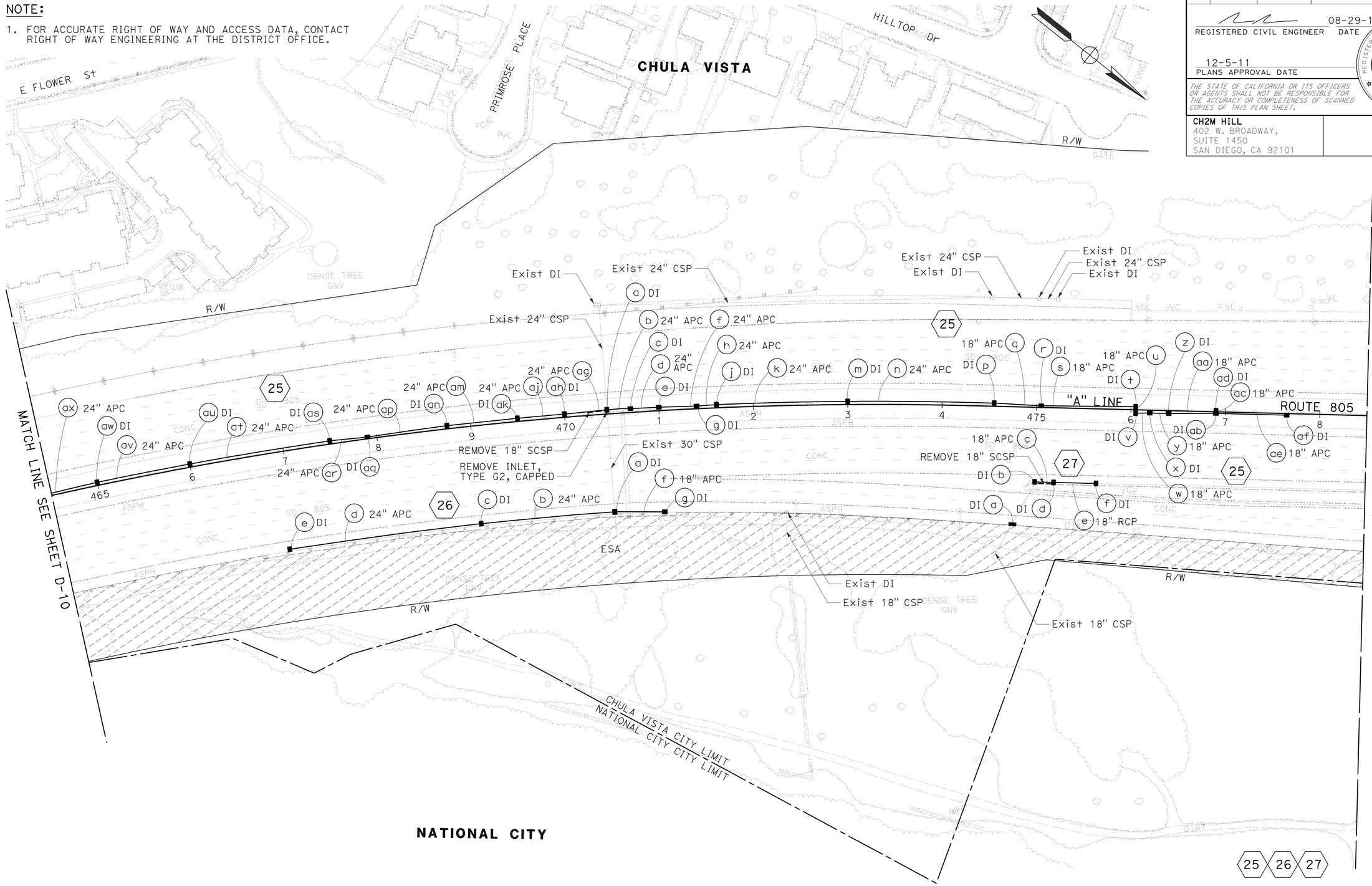

DRAINAGE PLAN

SCALE: 1" = 50'

D-11

APPROVED FOR DRAINAGE WORK ONLY

STATE OF CALIFORNIA - DEPARTMENT OF TRANSPORTATION

Caltrans

CONSULTANT FUNCTIONAL SUPERVISOR: HANY HAROUN

CALCULATED-DESIGNED BY: BENJAMIN ESPIRITU

CHECKED BY: JANICE REGUYAL

REVISED BY

DATE REVISED

LAST REVISION 11-14-11 DATE PLOTTED => 09-DEC-2011 TIME PLOTTED => 10:03

Dist	COUNTY	ROUTE	POST MILES TOTAL PROJECT	SHEET No.	TOTAL SHEETS
11	SD	54,805	1.8,5.5/9.4	94	635

REGISTERED CIVIL ENGINEER 08-29-11 DATE

12-5-11
PLANS APPROVAL DATE

REGISTERED PROFESSIONAL ENGINEER MATTHEW T. MCCARTHY No. C77228 Exp. 6-30-13 CIVIL STATE OF CALIFORNIA

THE STATE OF CALIFORNIA OR ITS OFFICERS OR AGENTS SHALL NOT BE RESPONSIBLE FOR THE ACCURACY OR COMPLETENESS OF SCANNED COPIES OF THIS PLAN SHEET.

CH2M HILL
402 W. BROADWAY,
SUITE 1450
SAN DIEGO, CA 92101

NOTE:

1. FOR ACCURATE RIGHT OF WAY AND ACCESS DATA, CONTACT RIGHT OF WAY ENGINEERING AT THE DISTRICT OFFICE.

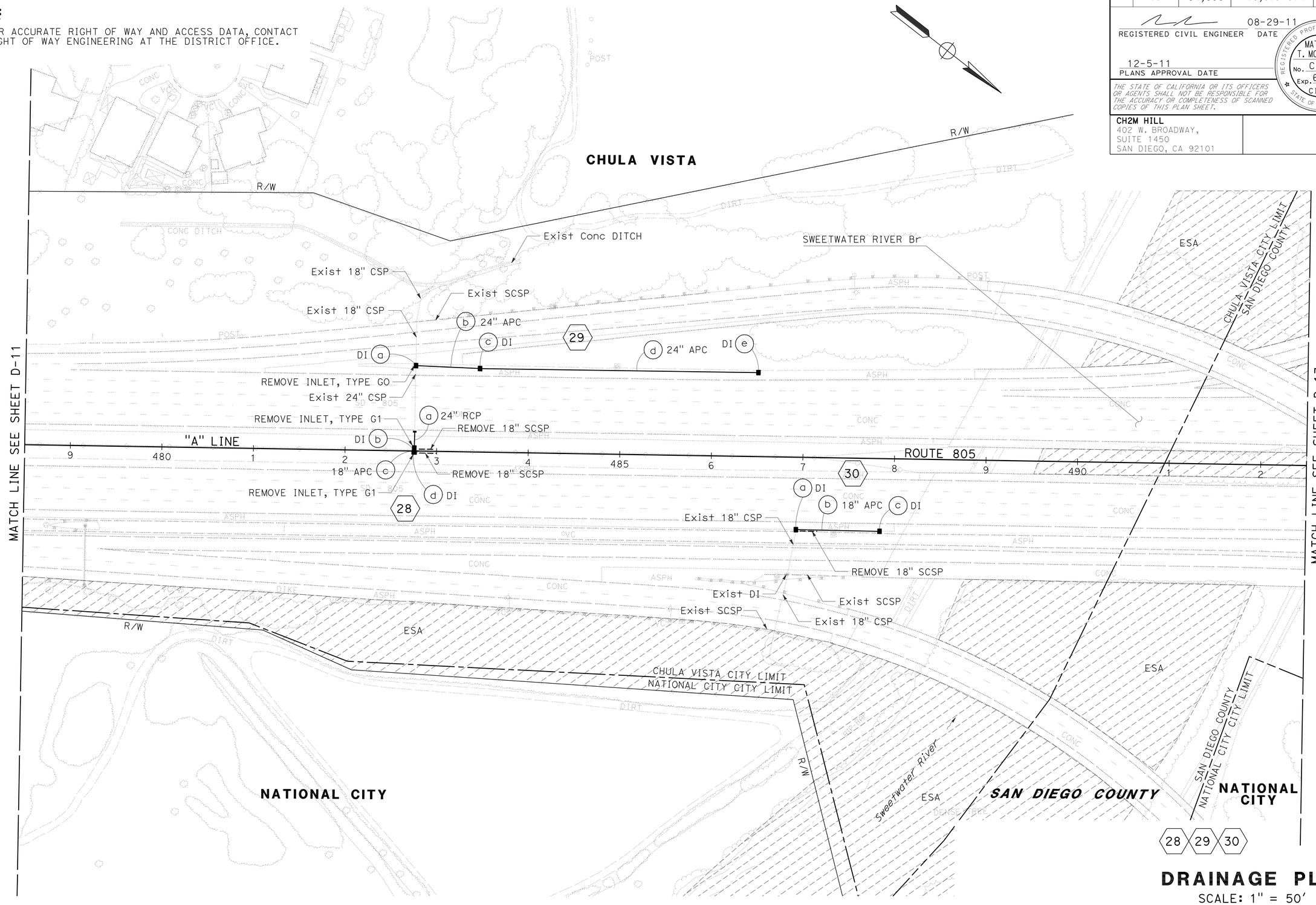

DRAINAGE PLAN

SCALE: 1" = 50'

APPROVED FOR DRAINAGE WORK ONLY

D-12

REVISED BY	DATE REVISED
BENJAMIN ESPIRITU	JANICE REGUYAL

CALCULATED-DESIGNED BY / CHECKED BY

CONSULTANT FUNCTIONAL SUPERVISOR: HANY HAROUN

STATE OF CALIFORNIA - DEPARTMENT OF TRANSPORTATION

Caltrans

LAST REVISION 08-29-11 DATE PLOTTED => 09-DEC-2011 TIME PLOTTED => 10:03

Dist	COUNTY	ROUTE	POST MILES TOTAL PROJECT	SHEET No.	TOTAL SHEETS
11	SD	54,805	1.8,5.5/9.4	95	635

REGISTERED CIVIL ENGINEER 08-29-11 DATE

12-5-11
PLANS APPROVAL DATE

REGISTERED PROFESSIONAL ENGINEER MATTHEW T. MCCARTHY No. C77228 Exp. 6-30-13 CIVIL STATE OF CALIFORNIA

THE STATE OF CALIFORNIA OR ITS OFFICERS OR AGENTS SHALL NOT BE RESPONSIBLE FOR THE ACCURACY OR COMPLETENESS OF SCANNED COPIES OF THIS PLAN SHEET.

CH2M HILL
402 W. BROADWAY,
SUITE 1450
SAN DIEGO, CA 92101

NOTE:

1. FOR ACCURATE RIGHT OF WAY AND ACCESS DATA, CONTACT RIGHT OF WAY ENGINEERING AT THE DISTRICT OFFICE.

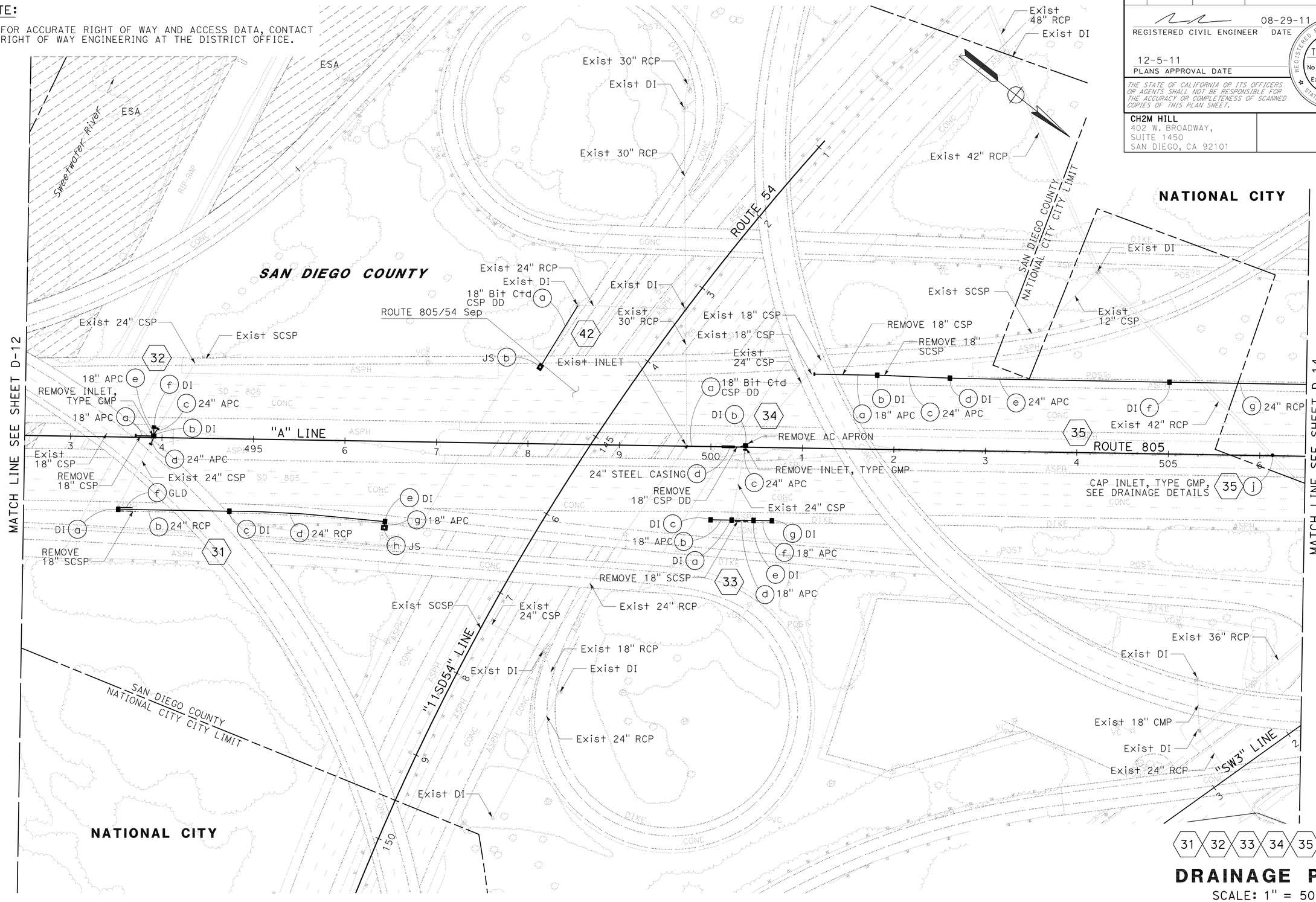

31 32 33 34 35 42

DRAINAGE PLAN

SCALE: 1" = 50'

D-13

APPROVED FOR DRAINAGE WORK ONLY

STATE OF CALIFORNIA - DEPARTMENT OF TRANSPORTATION
Caltrans

CONSULTANT FUNCTIONAL SUPERVISOR: HANY HAROUN
CALCULATED-DESIGNED BY: JANICE REGUYAL
CHECKED BY
REVISED BY: BENJAMIN ESPIRITU
DATE REVISED

LAST REVISION 08-29-11
DATE PLOTTED => 11-JAN-2012
TIME PLOTTED => 08:18

Dist	COUNTY	ROUTE	POST MILES TOTAL PROJECT	SHEET No.	TOTAL SHEETS
11	SD	54,805	1.8,5.5/9.4	96	635

REGISTERED CIVIL ENGINEER 08-29-11 DATE

12-5-11
PLANS APPROVAL DATE

REGISTERED PROFESSIONAL ENGINEER MATTHEW T. MCCARTHY No. C77228 Exp. 6-30-13 CIVIL STATE OF CALIFORNIA

THE STATE OF CALIFORNIA OR ITS OFFICERS OR AGENTS SHALL NOT BE RESPONSIBLE FOR THE ACCURACY OR COMPLETENESS OF SCANNED COPIES OF THIS PLAN SHEET.

CH2M HILL
402 W. BROADWAY,
SUITE 1450
SAN DIEGO, CA 92101

NOTE:

1. FOR ACCURATE RIGHT OF WAY AND ACCESS DATA, CONTACT RIGHT OF WAY ENGINEERING AT THE DISTRICT OFFICE.

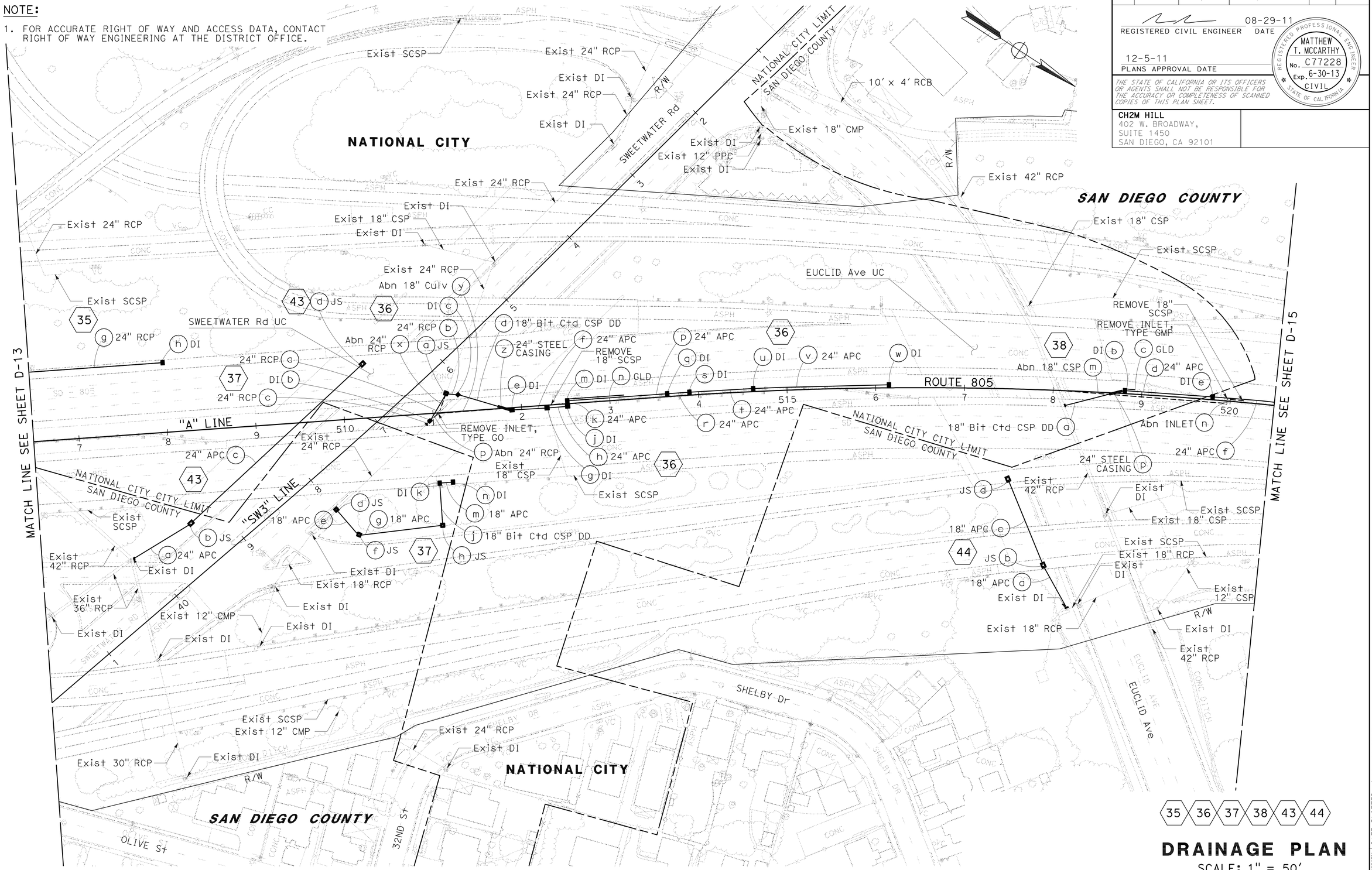

APPROVED FOR DRAINAGE WORK ONLY

DRAINAGE PLAN

SCALE: 1" = 50'

D-14

STATE OF CALIFORNIA - DEPARTMENT OF TRANSPORTATION

Caltrans

CONSULTANT FUNCTIONAL SUPERVISOR: HANY HAROUN

CALCULATED-DESIGNED BY: BENJAMIN ESPIRITU

CHECKED BY: JANICE REGUYAL

REVISED BY

DATE REVISED

LAST REVISION 08-29-11

DATE PLOTTED => 11-JAN-2012
TIME PLOTTED => 08:18

Dist	COUNTY	ROUTE	POST MILES TOTAL PROJECT	SHEET No.	TOTAL SHEETS
11	SD	54,805	1.8,5.5/9.4	97	635

REGISTERED CIVIL ENGINEER 08-29-11 DATE

12-5-11
PLANS APPROVAL DATE

REGISTERED PROFESSIONAL ENGINEER MATTHEW T. MCCARTHY No. C77228 Exp. 6-30-13 CIVIL STATE OF CALIFORNIA

THE STATE OF CALIFORNIA OR ITS OFFICERS OR AGENTS SHALL NOT BE RESPONSIBLE FOR THE ACCURACY OR COMPLETENESS OF SCANNED COPIES OF THIS PLAN SHEET.

CH2M HILL
402 W. BROADWAY,
SUITE 1450
SAN DIEGO, CA 92101

NOTE:

1. FOR ACCURATE RIGHT OF WAY AND ACCESS DATA, CONTACT RIGHT OF WAY ENGINEERING AT THE DISTRICT OFFICE.

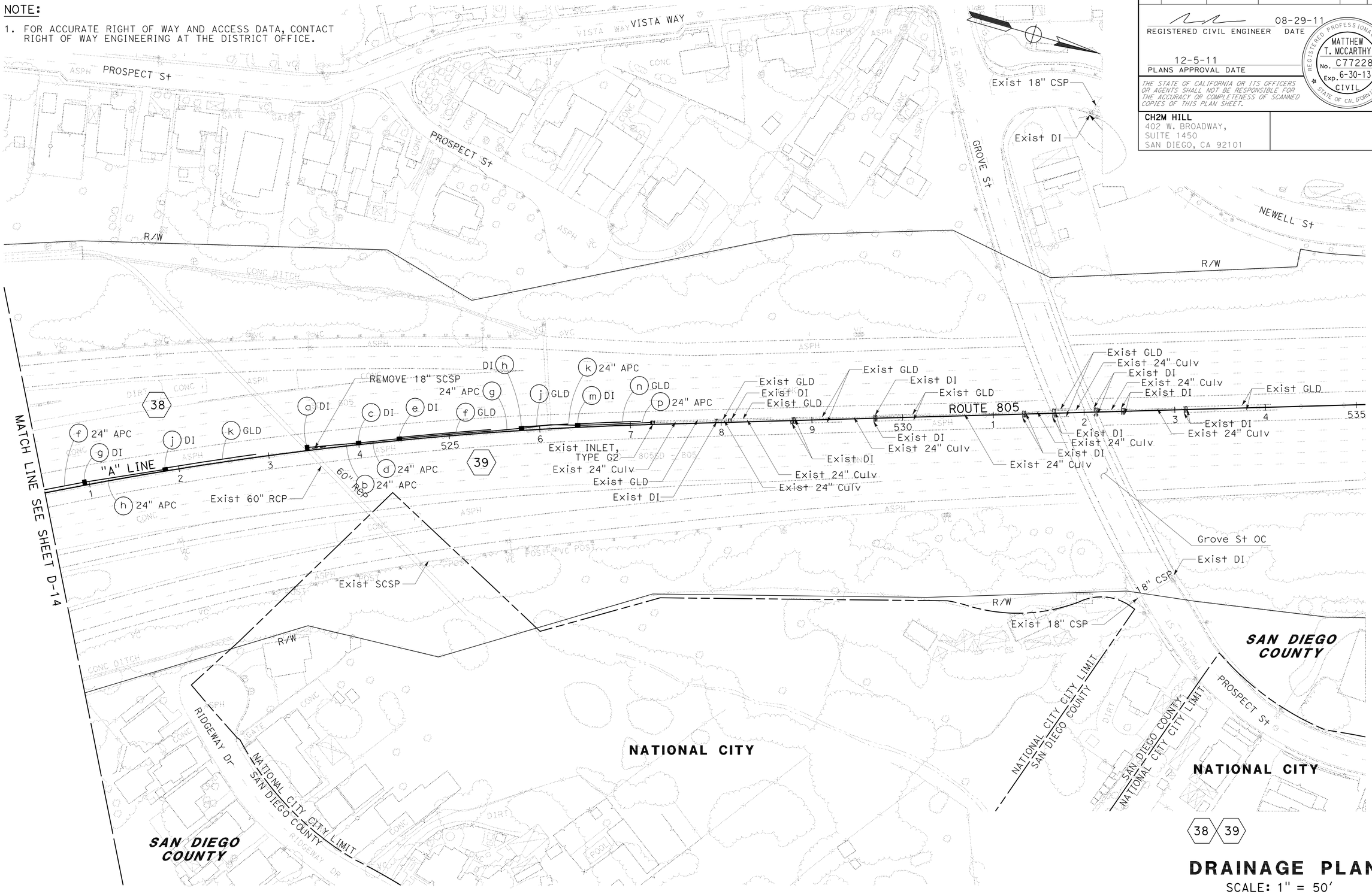

APPROVED FOR DRAINAGE WORK ONLY

DRAINAGE PLAN

SCALE: 1" = 50'

D-15

STATE OF CALIFORNIA - DEPARTMENT OF TRANSPORTATION

Caltrans

CONSULTANT FUNCTIONAL SUPERVISOR: HANY HAROUN

CALCULATED-DESIGNED BY: BENJAMIN ESPIRITU

CHECKED BY: JANICE REGUYAL

REVISED BY

DATE REVISED

LAST REVISION 08-29-11

DATE PLOTTED => 13-DEC-2011
TIME PLOTTED => 11:59

Dist	COUNTY	ROUTE	POST MILES TOTAL PROJECT	SHEET No.	TOTAL SHEETS
11	SD	54,805	1.8,5.5/9.4	98	635

REGISTERED CIVIL ENGINEER 08-29-11 DATE

12-5-11
PLANS APPROVAL DATE

REGISTERED PROFESSIONAL ENGINEER
MATTHEW T. MCCARTHY
No. C77228
Exp. 6-30-13
CIVIL
STATE OF CALIFORNIA

THE STATE OF CALIFORNIA OR ITS OFFICERS OR AGENTS SHALL NOT BE RESPONSIBLE FOR THE ACCURACY OR COMPLETENESS OF SCANNED COPIES OF THIS PLAN SHEET.

CH2M HILL
402 W. BROADWAY,
SUITE 1450
SAN DIEGO, CA 92101

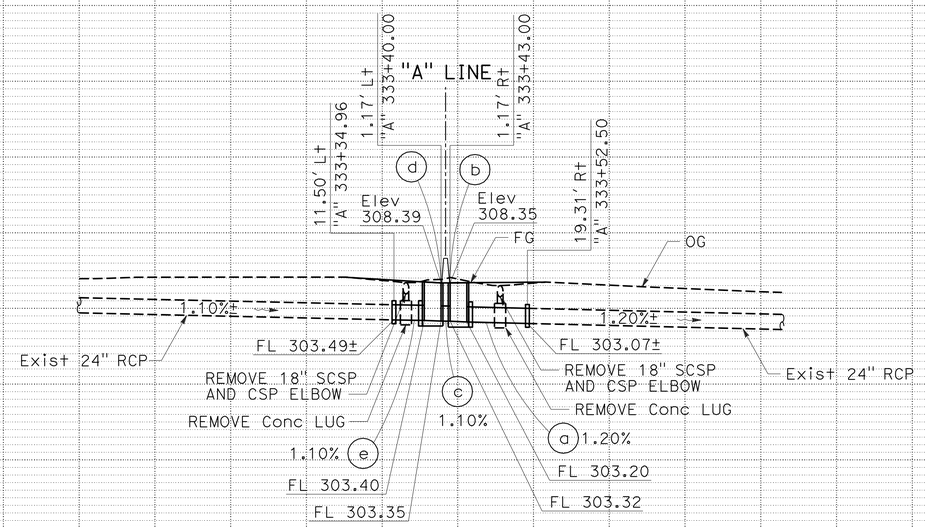

DRAINAGE SYSTEM No. 1

(a) 24" x 19.3' RCP, WITH TYPE L-2 AND M-42 COLLARS, SEE DRAINAGE DETAILS

(b) GT3 INLET (H=5.15'), WITH TWO TYPE 24-12 GRATES, SEE DRAINAGE DETAILS

(c) 24" x 4.1' RCP

(d) GT3 INLET (H=5.04'), WITH TWO TYPE 24-12 GRATES, SEE DRAINAGE DETAILS

(e) 24" x 10.3' RCP, WITH TYPE L-2 AND M-42 COLLARS, SEE DRAINAGE DETAILS

DRAINAGE PROFILES

SCALE: Horiz 1" = 20'
Vert 1" = 10'

DP-1

STATE OF CALIFORNIA - DEPARTMENT OF TRANSPORTATION
Caltrans

CONSULTANT FUNCTIONAL SUPERVISOR: HANY HAROUN
CALCULATED-DESIGNED BY: IOSEFA MATAGI
CHECKED BY: JANICE REGUYAL
REVISED BY
DATE REVISED

LAST REVISION 09-30-11
DATE PLOTTED => 09-DEC-2011
TIME PLOTTED => 10:15

Dist	COUNTY	ROUTE	POST MILES TOTAL PROJECT	SHEET No.	TOTAL SHEETS
11	SD	54,805	1.8,5.5/9.4	99	635

REGISTERED CIVIL ENGINEER 08-29-11 DATE

12-5-11
PLANS APPROVAL DATE

REGISTERED PROFESSIONAL ENGINEER MATTHEW T.MCCARTHY No. C77228 Exp. 6-30-13 CIVIL STATE OF CALIFORNIA

THE STATE OF CALIFORNIA OR ITS OFFICERS OR AGENTS SHALL NOT BE RESPONSIBLE FOR THE ACCURACY OR COMPLETENESS OF SCANNED COPIES OF THIS PLAN SHEET.

CH2M HILL
402 W. BROADWAY,
SUITE 1450
SAN DIEGO, CA 92101

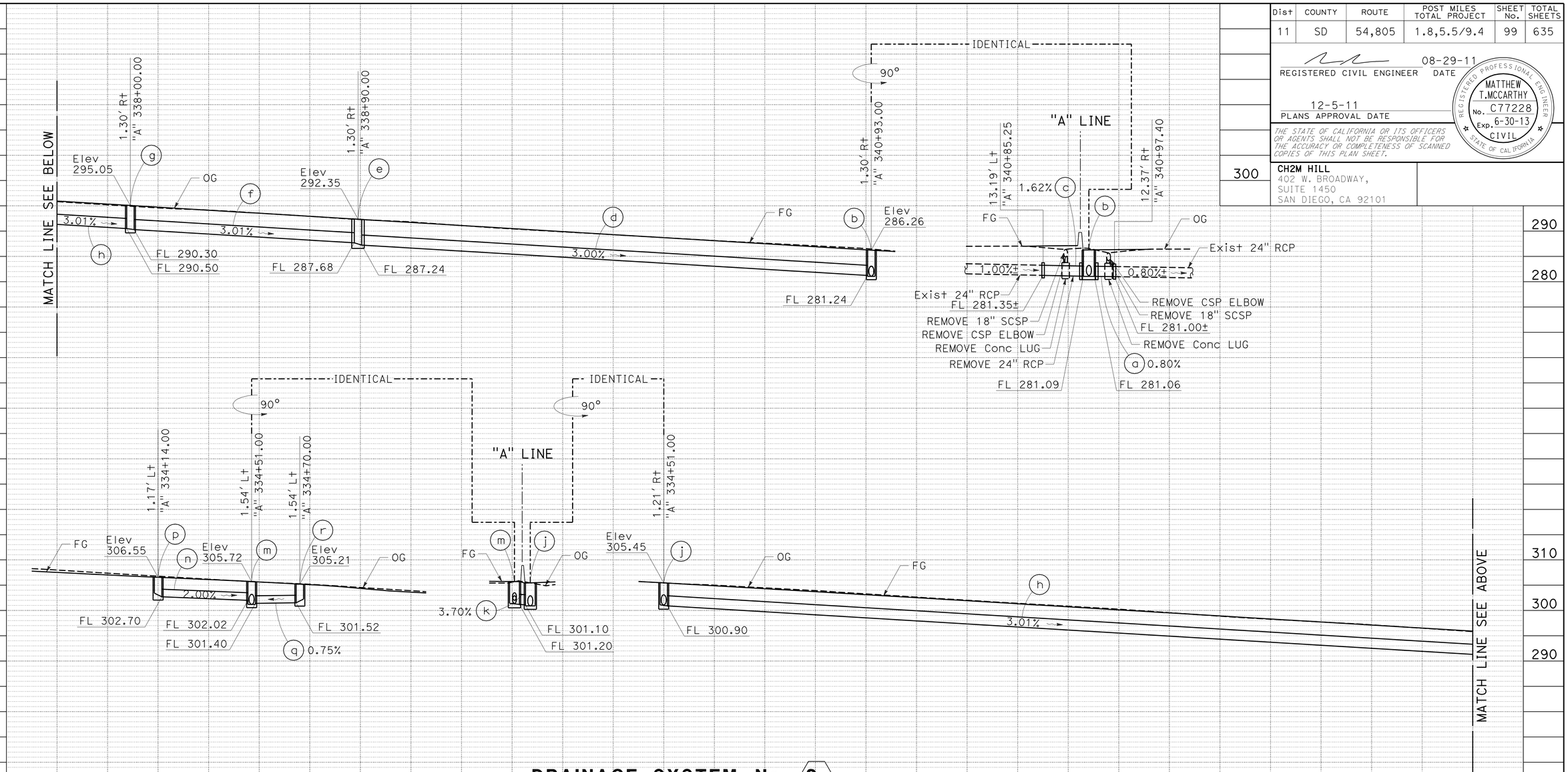

DRAINAGE SYSTEM No. 2

(a) 24" x 8.9' RCP, WITH TYPE L-2 AND M-42 COLLARS, SEE DRAINAGE DETAILS

(b) GD1 INLET (H=5.20'), WITH TWO TYPE 24-12 GRATES, SEE DRAINAGE DETAILS

(c) 24" x 16.9' RCP, WITH TYPE L-2 AND M-42 COLLARS, SEE DRAINAGE DETAILS

(d) 24" x 200.1' APC

(e) G2 INLET (H=5.11'), WITH TYPE 24-12 GRATE

(f) 24" x 87.1' APC

(g) GD1 INLET (H=4.75'), WITH TWO TYPE 24-12 GRATES, SEE DRAINAGE DETAILS

(h) 24" x 346.1' APC

(j) GD1 INLET (H=4.55'), WITH TWO TYPE 24-12 GRATES, SEE DRAINAGE DETAILS

(k) 24" x 2.8' APC

(m) GD1 INLET (H=4.52'), WITH TWO TYPE 24-12 GRATES, CASE 3, SEE DRAINAGE DETAILS

(n) 18" x 34.1' APC

(p) GD1 INLET (H=3.85'), WITH TWO TYPE 24-12 GRATES, SEE DRAINAGE DETAILS

(q) 18" x 16.1' APC

(r) G2 INLET (H=3.69'), WITH TYPE 24-12 GRATE, CASE 3, SEE DRAINAGE DETAILS

DRAINAGE PROFILES

SCALE: Horiz 1" = 20'
Vert 1" = 10'

DP-2

STATE OF CALIFORNIA - DEPARTMENT OF TRANSPORTATION
Caltrans

CONSULTANT FUNCTIONAL SUPERVISOR: HANY HAROUN
CALCULATED-DESIGNED BY: IOSEFA MATAGI
CHECKED BY: JANICE REGUYAL
REVISED BY
DATE REVISED

LAST REVISION 08-29-11
DATE PLOTTED => 09-DEC-2011
TIME PLOTTED => 10:15

Dist	COUNTY	ROUTE	POST MILES TOTAL PROJECT	SHEET No.	TOTAL SHEETS
11	SD	54,805	1.8,5.5/9.4	100	635

REGISTERED CIVIL ENGINEER 08-25-11 DATE

12-5-11
PLANS APPROVAL DATE

REGISTERED PROFESSIONAL ENGINEER WALDO R. LOPEZ No. C58085 Exp. 6-30-12 CIVIL STATE OF CALIFORNIA

THE STATE OF CALIFORNIA OR ITS OFFICERS OR AGENTS SHALL NOT BE RESPONSIBLE FOR THE ACCURACY OR COMPLETENESS OF SCANNED COPIES OF THIS PLAN SHEET.

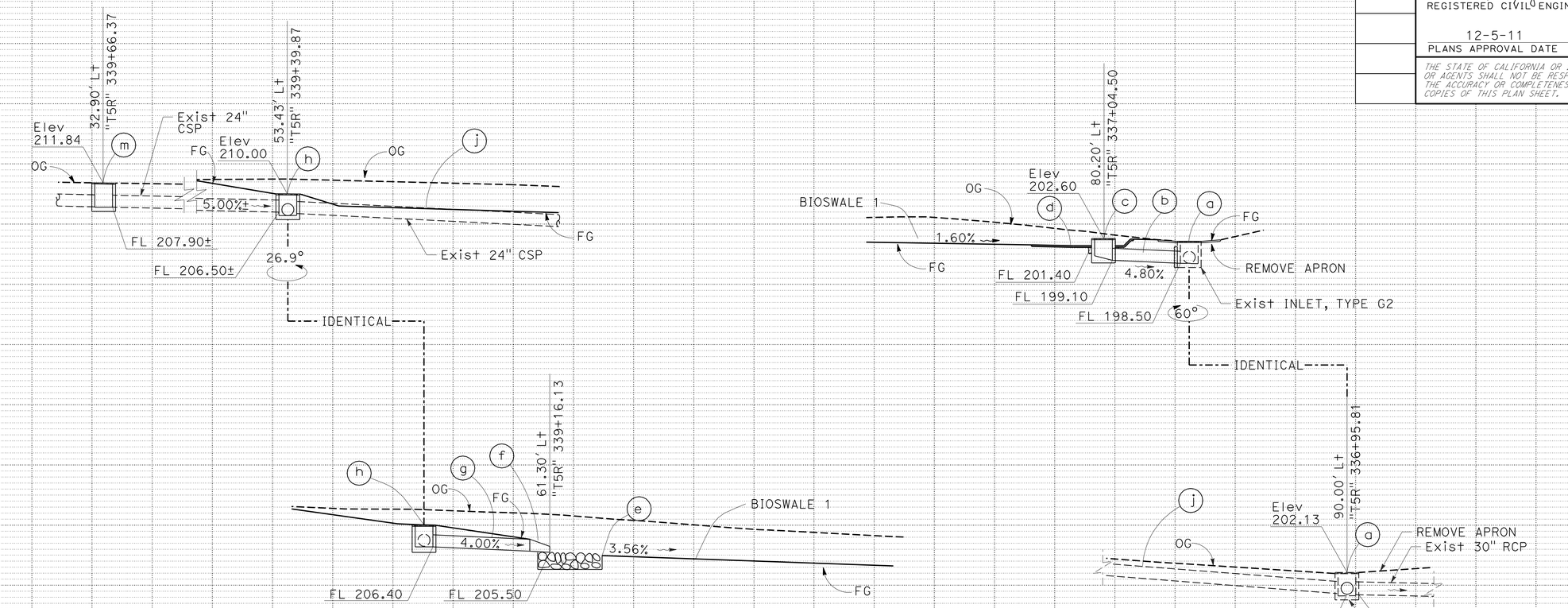

DRAINAGE SYSTEM No. 3

- (a) Conc APRON 1, SEE DRAINAGE DETAILS
- (b) 24" x 12.5' RCP, WITH TYPE L-3 COLLAR, SEE DRAINAGE DETAILS
- (c) OCP INLET (H=3.50'), WITH THREE OPENINGS AND STEEL PLATE COVER
- (d) Conc INTERCEPTING DITCH, SEE DRAINAGE DETAILS
- (e) RSP, BACKING NO. 3, METHOD B, SEE DRAINAGE DETAILS
- (f) 24" CONCRETE FLARED END SECTION
- (g) 24" x 20.0' RCP
- (h) G2 INLET (H=3.50'), WITH TYPE 24-12 GRATE
- (j) REMOVE 24" X 167.0' CSP
- (k) REMOVE 18" X 10.0' SCSP
- (m) G2 INLET (H=3.94'), WITH TYPE 24-12 GRATE

DRAINAGE PROFILES

SCALE: Horiz 1"=10'
Vert 1"=10'

DP-3

REVISED BY | DATE REVISED
EMAN ASHOOR | WALDO R. LOPEZ
CALCULATED-DESIGNED BY | CHECKED BY
FUNCTIONAL SUPERVISOR: ROGER CARLIN

STATE OF CALIFORNIA - DEPARTMENT OF TRANSPORTATION
Caltrans PROJECT DEVELOPMENT

LAST REVISION 08-29-11 | DATE PLOTTED => 08-DEC-2011 TIME PLOTTED => 10:38