Dist	COUNTY	ROUTE	POST MILES TOTAL PROJECT	SHEET No.	TOTAL SHEETS
11	SD	54,805	1.8,5.5/9.4	401	635

LICENSED LANDSCAPE ARCHITECT

12-5-11
PLANS APPROVAL DATE

LICENSED LANDSCAPE ARCHITECT
EMILIO L VIRAMONTES
10/31/12
08/12/11
STATE OF CALIFORNIA

THE STATE OF CALIFORNIA OR ITS OFFICERS OR AGENTS SHALL NOT BE RESPONSIBLE FOR THE ACCURACY OR COMPLETENESS OF SCANNED COPIES OF THIS PLAN SHEET.

DOKKEN ENGINEERING
5675 RUFFIN ROAD
SUITE 250
SAN DIEGO, CA 92123

NOTES:

1. FOR ACCURATE RIGHT OF WAY DATA, CONTACT RIGHT OF WAY ENGINEERING AT THE DISTRICT OFFICE
2. Exist 3" WATER METER AND 3" BPA LOCATED AT Rt 805 SOUTHBOUND AT 'H' STREET OFF-RAMP Sta. 420+40

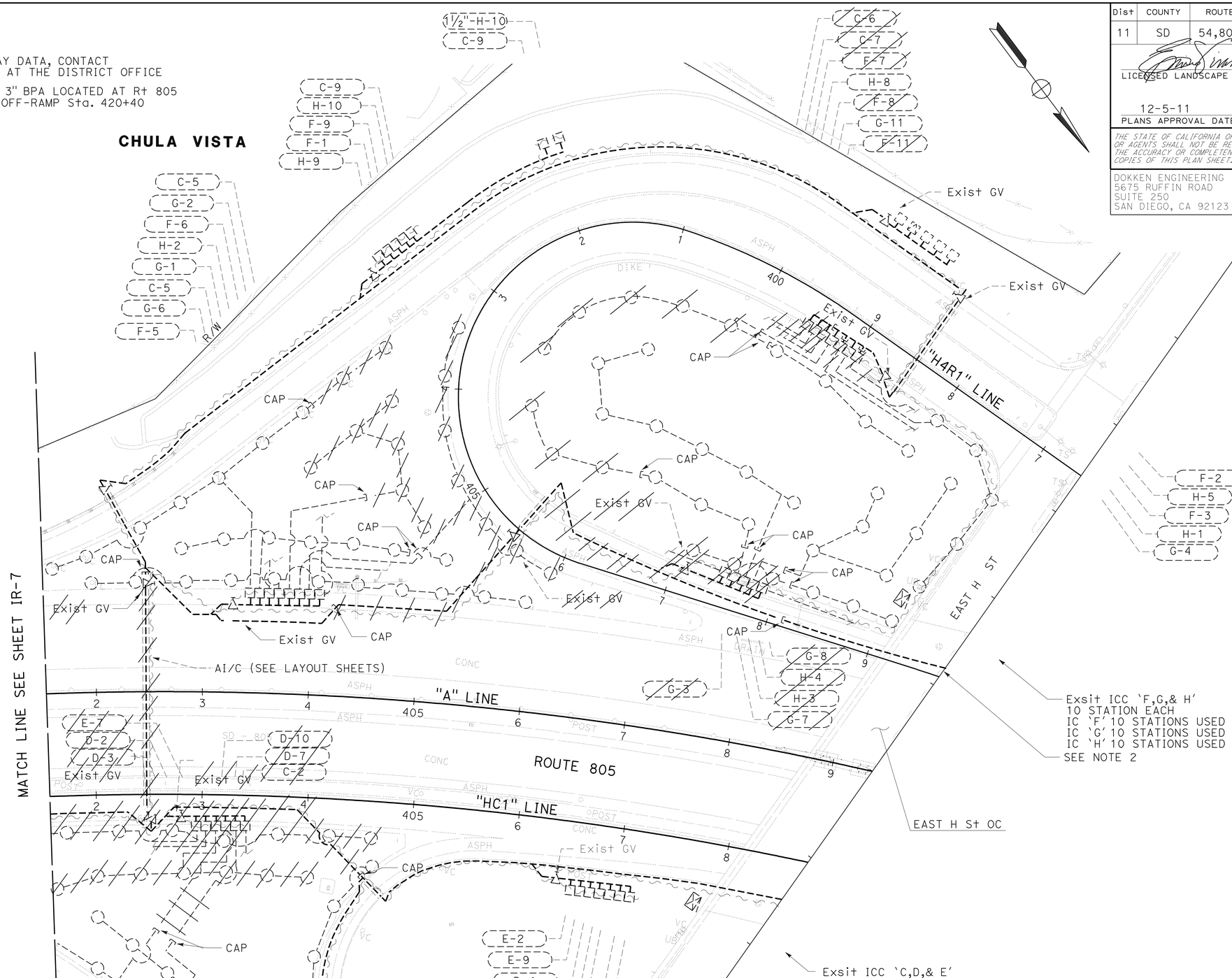

APPROVED FOR IRRIGATION REMOVAL WORK ONLY

IRRIGATION REMOVAL PLAN

SCALE: 1" = 50'

IR-8

STATE OF CALIFORNIA - DEPARTMENT OF TRANSPORTATION
Caltrans

CONSULTANT SENIOR LANDSCAPE ARCHITECT: EMILIO VIRAMONTES
CALCULATED-DESIGNED BY: JENA ADDENBROOKE
CHECKED BY: EMILIO VIRAMONTES
REVISED BY
DATE REVISED

LAST REVISION 08-29-11
DATE PLOTTED => 12-DEC-2011
TIME PLOTTED => 09:49

Dist	COUNTY	ROUTE	POST MILES TOTAL PROJECT	SHEET No.	TOTAL SHEETS
11	SD	54,805	1.8,5.5/9.4	402	635

LICENSED LANDSCAPE ARCHITECT

12-5-11
PLANS APPROVAL DATE

LICENSED LANDSCAPE ARCHITECT
EMILIO L VIRAMONTES
10/31/12
08/12/11
STATE OF CALIFORNIA

THE STATE OF CALIFORNIA OR ITS OFFICERS OR AGENTS SHALL NOT BE RESPONSIBLE FOR THE ACCURACY OR COMPLETENESS OF SCANNED COPIES OF THIS PLAN SHEET.

DOKKEN ENGINEERING
5675 RUFFIN ROAD
SUITE 250
SAN DIEGO, CA 92123

NOTES:

1. FOR ACCURATE RIGHT OF WAY DATA, CONTACT RIGHT OF WAY ENGINEERING AT THE DISTRICT OFFICE
2. Exist 3" WATER METER AND 3" BPA LOCATED AT ROUTE 805 SOUTHBOUND AT 'H' STREET OFF-RAMP "A" LINE Sta. 420+40.
3. FOR CONTROLLER 'A' LOCATION SEE SHEET IP-8.

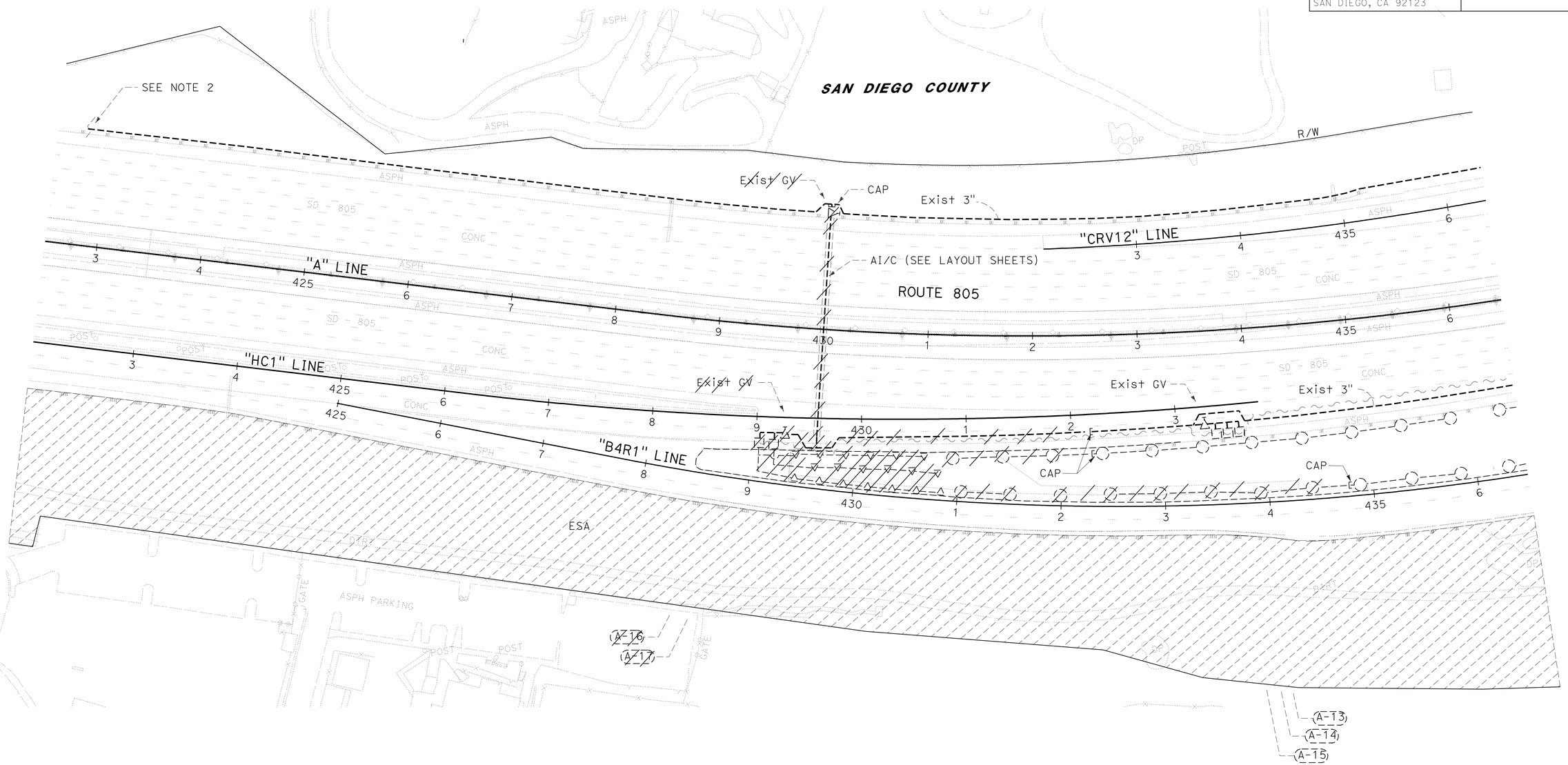

IRRIGATION REMOVAL PLAN

SCALE 1" = 50'

IR-9

APPROVED FOR IRRIGATION REMOVAL WORK ONLY.

STATE OF CALIFORNIA - DEPARTMENT OF TRANSPORTATION
Caltrans

CONSULTANT SENIOR LANDSCAPE ARCHITECT: EMILIO VIRAMONTES

REVISED BY	DATE REVISED
JENA ADDENBROOKE	EMILIO VIRAMONTES
CALCULATED-DESIGNED BY	CHECKED BY

LAST REVISION 08-29-11
DATE PLOTTED => 11-JAN-2012
TIME PLOTTED => 08:44

Dist	COUNTY	ROUTE	POST MILES TOTAL PROJECT	SHEET No.	TOTAL SHEETS
11	SD	54,805	1.8,5.5/9.4	403	635

LICENSED LANDSCAPE ARCHITECT

12-5-11
PLANS APPROVAL DATE

LICENSED LANDSCAPE ARCHITECT MARLENE J. GROS No. 2910 STATE OF CALIFORNIA
09/30/13 EXPIRATION DATE
08/24/11 DATE

THE STATE OF CALIFORNIA OR ITS OFFICERS OR AGENTS SHALL NOT BE RESPONSIBLE FOR THE ACCURACY OR COMPLETENESS OF SCANNED COPIES OF THIS PLAN SHEET.

NOTE:

1. FOR ACCURATE RIGHT OF WAY AND ACCESS DATA, CONTACT RIGHT OF WAY ENGINEERING AT THE DISTRICT OFFICE.

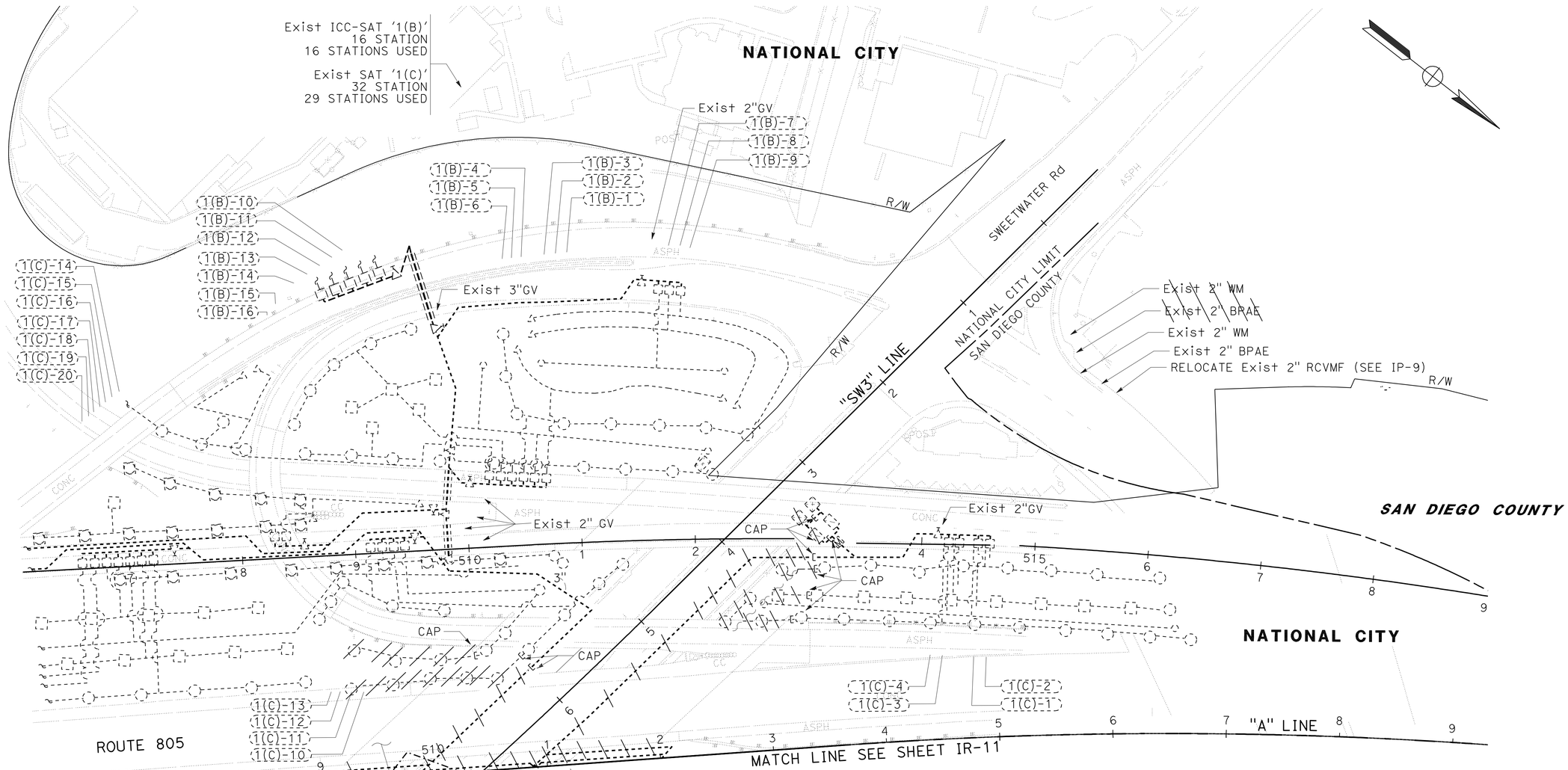

IRRIGATION REMOVAL PLAN

SCALE: 1" = 50'

IR-10

APPROVED FOR IRRIGATION REMOVAL WORK ONLY

STATE OF CALIFORNIA - DEPARTMENT OF TRANSPORTATION
Caltrans® LANDSCAPE ARCHITECTURE

CONSULTANT SENIOR LANDSCAPE ARCHITECT: STEPHEN ALVAREZ

CALCULATED-DESIGNED BY: MARLENE GROS
CHECKED BY: EMILIO VIRAMONTES

REVISED BY
DATE REVISED

LAST REVISION 08-29-11
DATE PLOTTED => 12-DEC-2011
TIME PLOTTED => 09:49

Dist	COUNTY	ROUTE	POST MILES TOTAL PROJECT	SHEET No.	TOTAL SHEETS
11	SD	54,805	1.8,5.5/9.4	404	635

LICENSED LANDSCAPE ARCHITECT

12-5-11
PLANS APPROVAL DATE

LICENSED LANDSCAPE ARCHITECT
MARLENE J. GROS No. 2910
STATE OF CALIFORNIA
09/30/13
08/24/11

THE STATE OF CALIFORNIA OR ITS OFFICERS OR AGENTS SHALL NOT BE RESPONSIBLE FOR THE ACCURACY OR COMPLETENESS OF SCANNED COPIES OF THIS PLAN SHEET.

NOTES:

1. FOR ACCURATE RIGHT OF WAY AND ACCESS DATA, CONTACT RIGHT OF WAY ENGINEERING AT THE DISTRICT OFFICE.
2. Exist ICC AND SATELLITE CONTROLLERS 1(D) AND 1(E) ARE LOCATED AT NORTHEAST CORNER OF THE PARK AND RIDE FACILITY 600' SE OF 805/SWEETWATER ROAD INTERSECTION

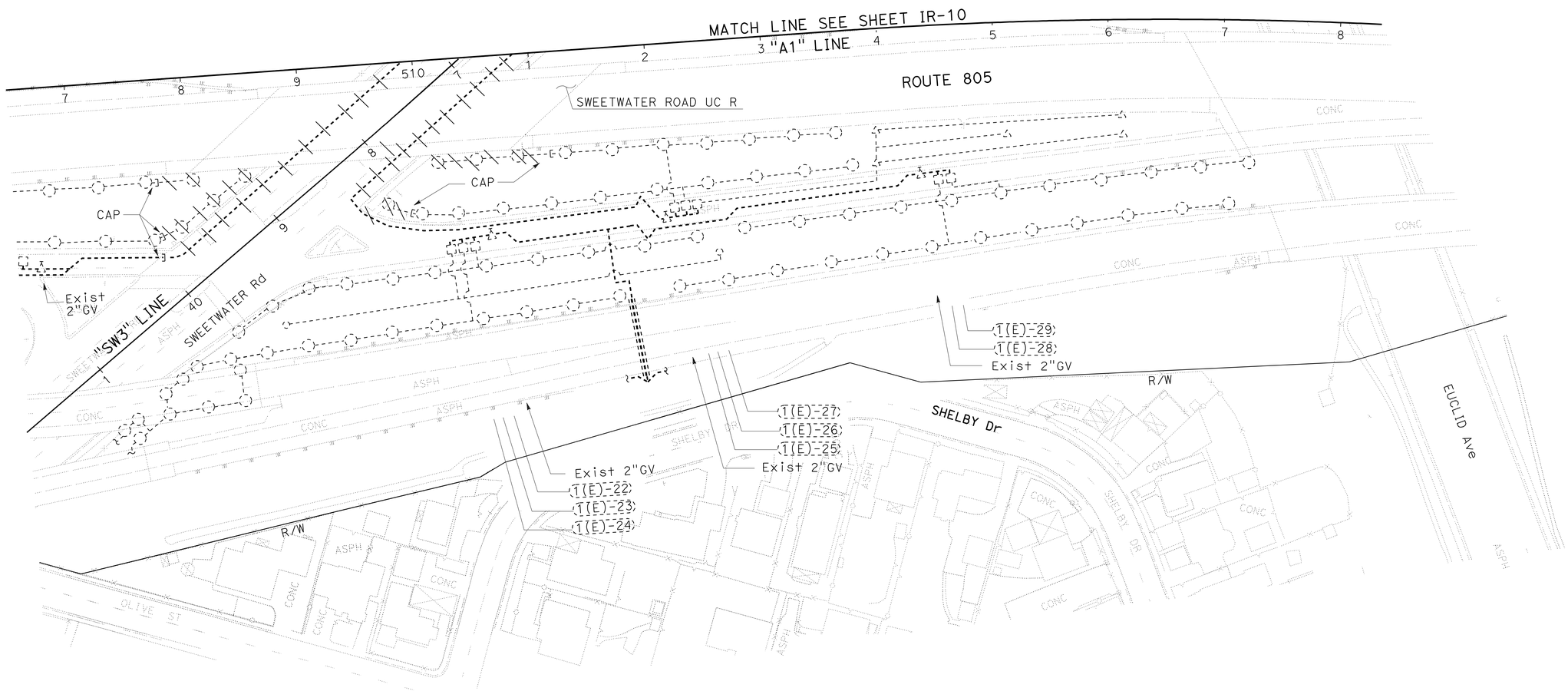

IRRIGATION REMOVAL PLAN

SCALE: 1" = 50'

IR-11

APPROVED FOR IRRIGATION REMOVAL WORK ONLY

STATE OF CALIFORNIA - DEPARTMENT OF TRANSPORTATION
Caltrans® LANDSCAPE ARCHITECTURE

SENIOR LANDSCAPE ARCHITECT: STEPHEN ALVAREZ

CALCULATED-DESIGNED BY: MARLENE GROS
CHECKED BY: EMILIO VIRAMONTES

REVISED BY
DATE REVISED

LAST REVISION 08-29-11
DATE PLOTTED => 12-DEC-2011
TIME PLOTTED => 09:50

Dist	COUNTY	ROUTE	POST MILES TOTAL PROJECT	SHEET No.	TOTAL SHEETS
11	SD	54,805	1.8,5.5/9.4	405	635

LICENSED LANDSCAPE ARCHITECT

12-5-11
PLANS APPROVAL DATE

LICENSED LANDSCAPE ARCHITECT EMILIO L VIRAMONTES 10/31/12 08/12/11 STATE OF CALIFORNIA

THE STATE OF CALIFORNIA OR ITS OFFICERS OR AGENTS SHALL NOT BE RESPONSIBLE FOR THE ACCURACY OR COMPLETENESS OF SCANNED COPIES OF THIS PLAN SHEET.

DOKKEN ENGINEERING
5675 RUFFIN ROAD
SUITE 250
SAN DIEGO, CA 92123

NOTE:
FOR ACCURATE RIGHT OF WAY DATA, CONTACT RIGHT OF WAY ENGINEERING AT THE DISTRICT OFFICE

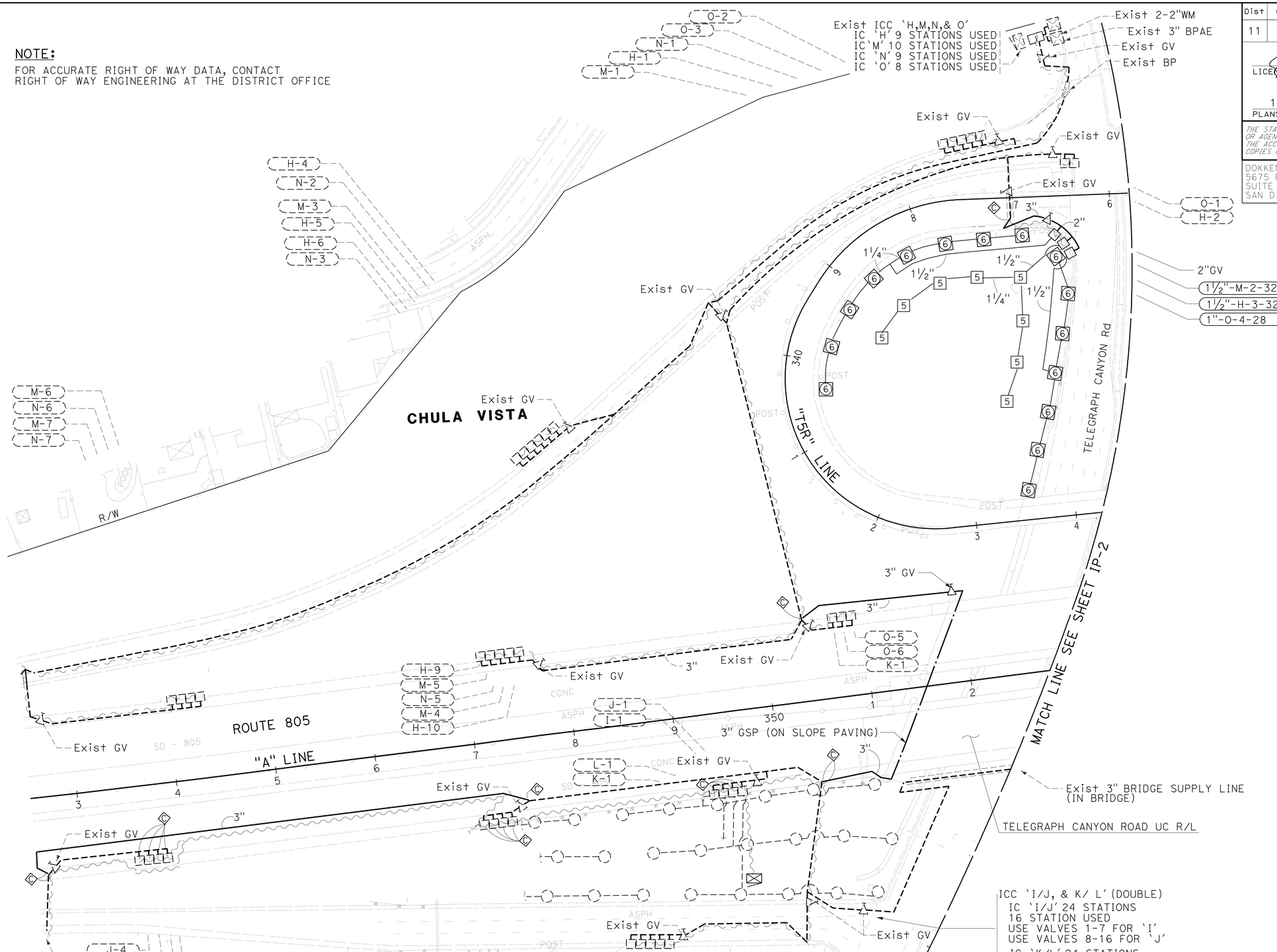

APPROVED FOR IRRIGATION WORK ONLY.

IRRIGATION PLAN

SCALE: 1" = 50'

IP-1

STATE OF CALIFORNIA - DEPARTMENT OF TRANSPORTATION
Caltrans

CONSULTANT SENIOR LANDSCAPE ARCHITECT: EMILIO VIRAMONTES
CALCULATED-DESIGNED BY: JENA ADDENBROOKE
CHECKED BY: EMILIO VIRAMONTES
REVISED BY
DATE REVISED

LAST REVISION 08-29-11
DATE PLOTTED => 12-DEC-2011
TIME PLOTTED => 09:50

NOTE:
FOR ACCURATE RIGHT OF WAY DATA, CONTACT
RIGHT OF WAY ENGINEERING AT THE DISTRICT OFFICE

Dist	COUNTY	ROUTE	POST MILES TOTAL PROJECT	SHEET No.	TOTAL SHEETS
11	SD	54,805	1.8,5.5/9.4	406	635

LICENSED LANDSCAPE ARCHITECT

12-5-11
PLANS APPROVAL DATE

LICENSED LANDSCAPE ARCHITECT
EMILIO L VIRAMONTES
10/31/12
08/12/11
DATE
STATE OF CALIFORNIA

THE STATE OF CALIFORNIA OR ITS OFFICERS OR AGENTS SHALL NOT BE RESPONSIBLE FOR THE ACCURACY OR COMPLETENESS OF SCANNED COPIES OF THIS PLAN SHEET.

DOKKEN ENGINEERING
5675 RUFFIN ROAD
SUITE 250
SAN DIEGO, CA 92123

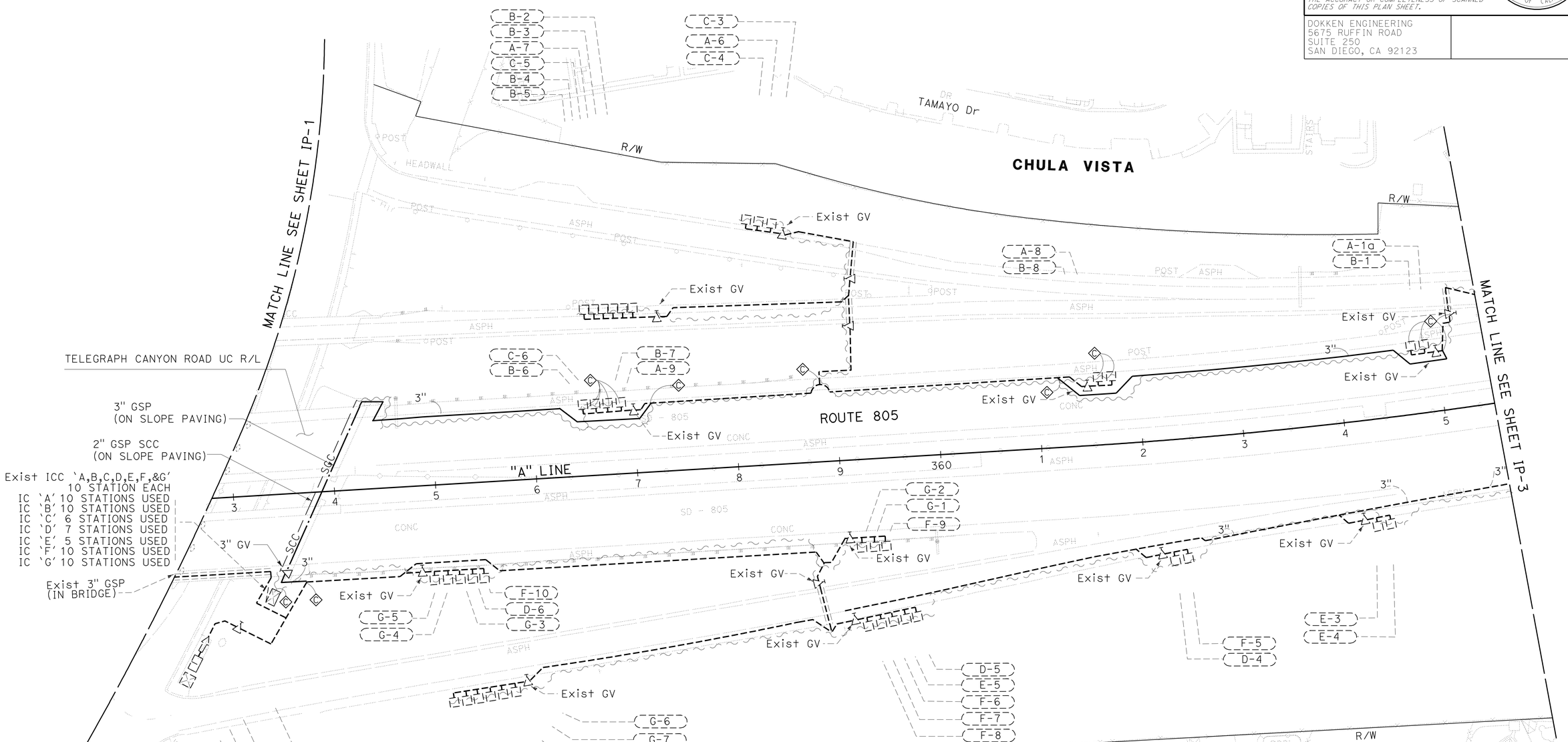

IRRIGATION PLAN

SCALE: 1" = 50'

IP-2

APPROVED FOR IRRIGATION WORK ONLY.

REVISED BY	DATE REVISED
JENA ADDENBROOKE	EMILIO VIRAMONTES

CALCULATED-DESIGNED BY
CHECKED BY

CONSULTANT SENIOR LANDSCAPE ARCHITECT
EMILIO VIRAMONTES

STATE OF CALIFORNIA - DEPARTMENT OF TRANSPORTATION
Caltrans

LAST REVISION 08-29-11
DATE PLOTTED => 12-DEC-2011
TIME PLOTTED => 09:50

Dist	COUNTY	ROUTE	POST MILES TOTAL PROJECT	SHEET No.	TOTAL SHEETS
11	SD	54,805	1.8,5.5/9.4	407	635

LICENSED LANDSCAPE ARCHITECT

12-5-11
PLANS APPROVAL DATE

LICENSED LANDSCAPE ARCHITECT
EMILIO L VIRAMONTES
10/31/12
LICENSE EXPIRES
08/12/11
DATE
STATE OF CALIFORNIA

THE STATE OF CALIFORNIA OR ITS OFFICERS OR AGENTS SHALL NOT BE RESPONSIBLE FOR THE ACCURACY OR COMPLETENESS OF SCANNED COPIES OF THIS PLAN SHEET.

DOKKEN ENGINEERING
5675 RUFFIN ROAD
SUITE 250
SAN DIEGO, CA 92123

NOTE:
FOR ACCURATE RIGHT OF WAY DATA, CONTACT
RIGHT OF WAY ENGINEERING AT THE DISTRICT OFFICE

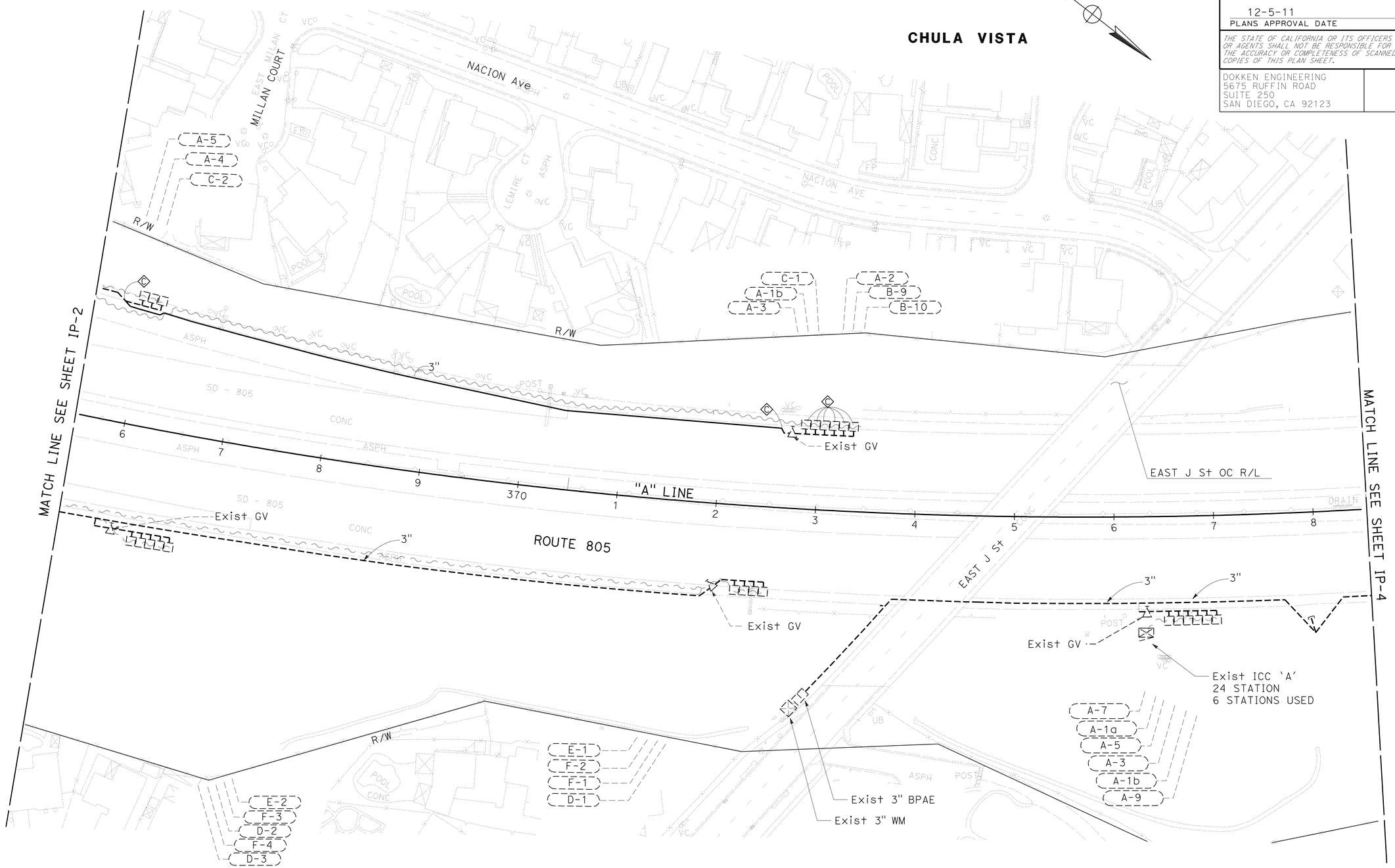

IRRIGATION PLAN

SCALE: 1" = 50'

IP-3

APPROVED FOR IRRIGATION WORK ONLY.

STATE OF CALIFORNIA - DEPARTMENT OF TRANSPORTATION
Caltrans

CONSULTANT SENIOR LANDSCAPE ARCHITECT
EMILIO VIRAMONTES

JENA ADDENBROOKE
EMILIO VIRAMONTES

CALCULATED-DESIGNED BY
CHECKED BY

REVISED BY
DATE REVISED

LAST REVISION 08-29-11
DATE PLOTTED => 12-DEC-2011
TIME PLOTTED => 09:50

Dist	COUNTY	ROUTE	POST MILES TOTAL PROJECT	SHEET No.	TOTAL SHEETS
11	SD	54,805	1.8,5.5/9.4	408	635

LICENSED LANDSCAPE ARCHITECT

12-5-11
PLANS APPROVAL DATE

LICENSED LANDSCAPE ARCHITECT
EMILIO L VIRAMONTES
10/31/12
08/12/11
STATE OF CALIFORNIA

THE STATE OF CALIFORNIA OR ITS OFFICERS OR AGENTS SHALL NOT BE RESPONSIBLE FOR THE ACCURACY OR COMPLETENESS OF SCANNED COPIES OF THIS PLAN SHEET.

DOKKEN ENGINEERING
5675 RUFFIN ROAD
SUITE 250
SAN DIEGO, CA 92123

NOTE:
FOR ACCURATE RIGHT OF WAY DATA, CONTACT
RIGHT OF WAY ENGINEERING AT THE DISTRICT OFFICE

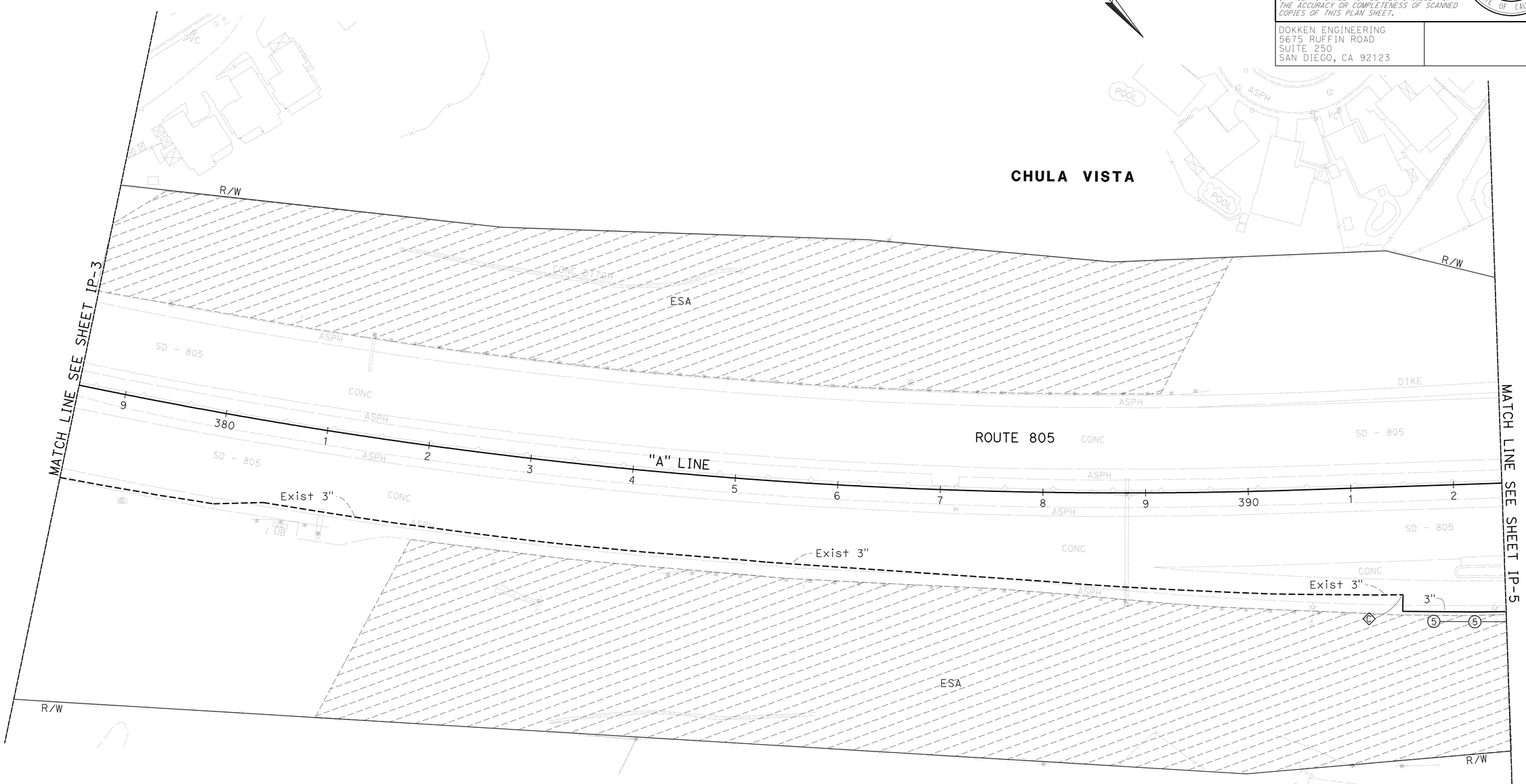

IRRIGATION PLAN

SCALE: 1" = 50'

IP-4

APPROVED FOR IPRIGATION WORK ONLY.

STATE OF CALIFORNIA - DEPARTMENT OF TRANSPORTATION
Caltrans

CONSULTANT SENIOR LANDSCAPE ARCHITECT: EMILIO VIRAMONTES

CALCULATED-DESIGNED BY: JENA ADDENBROOKE
CHECKED BY: EMILIO VIRAMONTES
REVISED BY
DATE REVISED

LAST REVISION 08-29-11
DATE PLOTTED => 11-JAN-2012
TIME PLOTTED => 08:46

Dist	COUNTY	ROUTE	POST MILES TOTAL PROJECT	SHEET No.	TOTAL SHEETS
11	SD	54,805	1.8,5.5/9.4	409	635

LICENSED LANDSCAPE ARCHITECT

12-5-11
PLANS APPROVAL DATE

LICENSED LANDSCAPE ARCHITECT
EMILIO L VIRAMONTES
10/31/12
08/12/11
DATE
STATE OF CALIFORNIA

THE STATE OF CALIFORNIA OR ITS OFFICERS OR AGENTS SHALL NOT BE RESPONSIBLE FOR THE ACCURACY OR COMPLETENESS OF SCANNED COPIES OF THIS PLAN SHEET.

DOKKEN ENGINEERING
5675 RUFFIN ROAD
SUITE 250
SAN DIEGO, CA 92123

NOTE:
FOR ACCURATE RIGHT OF WAY DATA, CONTACT
RIGHT OF WAY ENGINEERING AT THE DISTRICT OFFICE

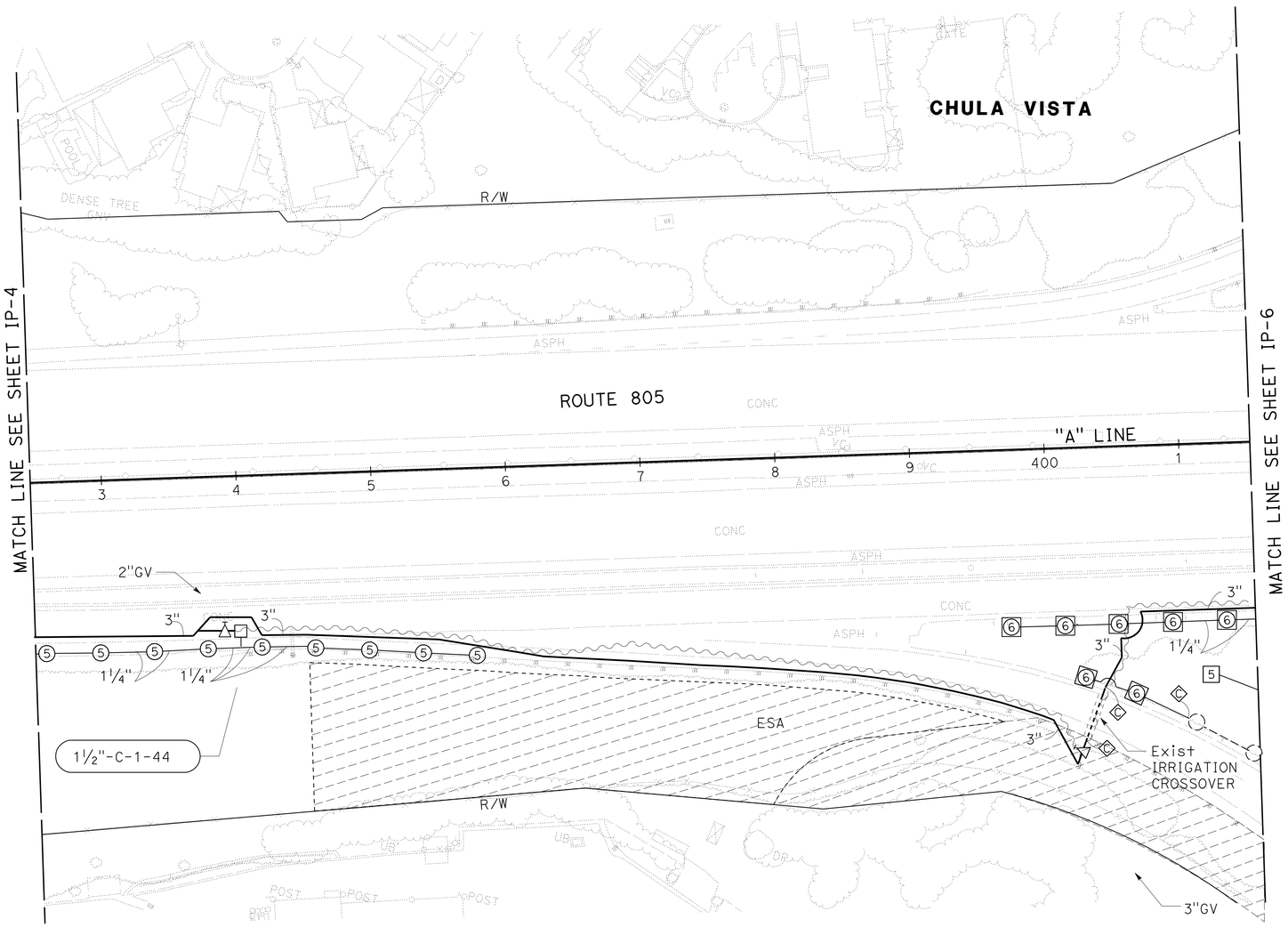

APPROVED FOR IRRIGATION WORK ONLY.

IRRIGATION PLAN

SCALE: 1" = 50'

IP-5

STATE OF CALIFORNIA - DEPARTMENT OF TRANSPORTATION
Caltrans

CONSULTANT SENIOR LANDSCAPE ARCHITECT: EMILIO VIRAMONTES
CALCULATED-DESIGNED BY: JENA ADDENBROOKE
CHECKED BY: EMILIO VIRAMONTES
REVISED BY
DATE REVISED

LAST REVISION 08-29-11
DATE PLOTTED => 12-DEC-2011
TIME PLOTTED => 09:50

Dist	COUNTY	ROUTE	POST MILES TOTAL PROJECT	SHEET No.	TOTAL SHEETS
11	SD	54,805	1.8,5.5/9.4	410	635

LICENSED LANDSCAPE ARCHITECT

12-5-11
PLANS APPROVAL DATE

LICENSED LANDSCAPE ARCHITECT
EMILIO L VIRAMONTES
10/31/12
08/12/11
DATE
STATE OF CALIFORNIA

THE STATE OF CALIFORNIA OR ITS OFFICERS OR AGENTS SHALL NOT BE RESPONSIBLE FOR THE ACCURACY OR COMPLETENESS OF SCANNED COPIES OF THIS PLAN SHEET.

DOKKEN ENGINEERING
5675 RUFFIN ROAD
SUITE 250
SAN DIEGO, CA 92123

NOTES:

1. FOR ACCURATE RIGHT OF WAY DATA, CONTACT RIGHT OF WAY ENGINEERING AT THE DISTRICT OFFICE
2. Exist 3" WATER METER AND 3" BPA LOCATED AT Rt 805 SOUTHBOUND AT 'H' STREET OFF-RAMP Sta. 420+40

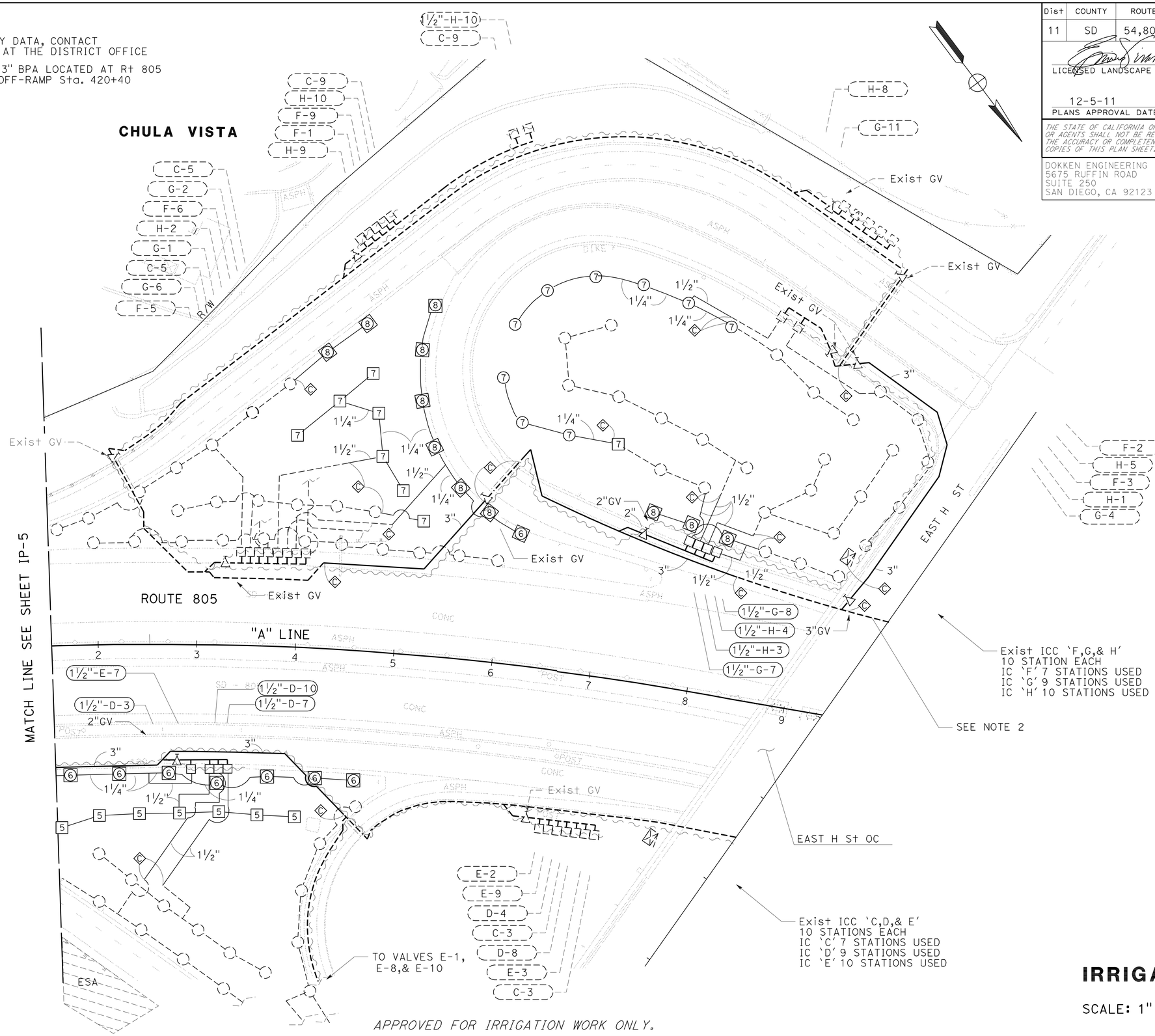

IRRIGATION PLAN

SCALE: 1" = 50'

IP-6

REVISED BY	DATE REVISED
JENA ADDENBROOKE	EMILIO VIRAMONTES
CALCULATED-DESIGNED BY	CHECKED BY
CONSULTANT SENIOR LANDSCAPE ARCHITECT	EMILIO VIRAMONTES

STATE OF CALIFORNIA - DEPARTMENT OF TRANSPORTATION

Caltrans

LAST REVISION 08-29-11 | DATE PLOTTED => 12-DEC-2011 | TIME PLOTTED => 09:50

Dist	COUNTY	ROUTE	POST MILES TOTAL PROJECT	SHEET No.	TOTAL SHEETS
11	SD	54,805	1.8,5.5/9.4	411	635

LICENSED LANDSCAPE ARCHITECT

12-5-11
PLANS APPROVAL DATE

LICENSED LANDSCAPE ARCHITECT
EMILIO L VIRAMONTES
10/31/12
08/12/11
DATE
STATE OF CALIFORNIA

THE STATE OF CALIFORNIA OR ITS OFFICERS OR AGENTS SHALL NOT BE RESPONSIBLE FOR THE ACCURACY OR COMPLETENESS OF SCANNED COPIES OF THIS PLAN SHEET.

DOKKEN ENGINEERING
5675 RUFFIN ROAD
SUITE 250
SAN DIEGO, CA 92123

NOTES:

1. FOR ACCURATE RIGHT OF WAY DATA, CONTACT RIGHT OF WAY ENGINEERING AT THE DISTRICT OFFICE
2. Exist 3" WATER METER AND 3" BPA LOCATED AT ROUTE 805 SOUTHBOUND AT 'H' STREET OFF-RAMP STA. 420+40
3. Exist BICODER A-VD5-4 HAS 3 VALVES CONNECTED. ADD VALVE A-16 TO EXISTING BICODER A-VD5-4 - SEE LANDSCAPE DETAILS.

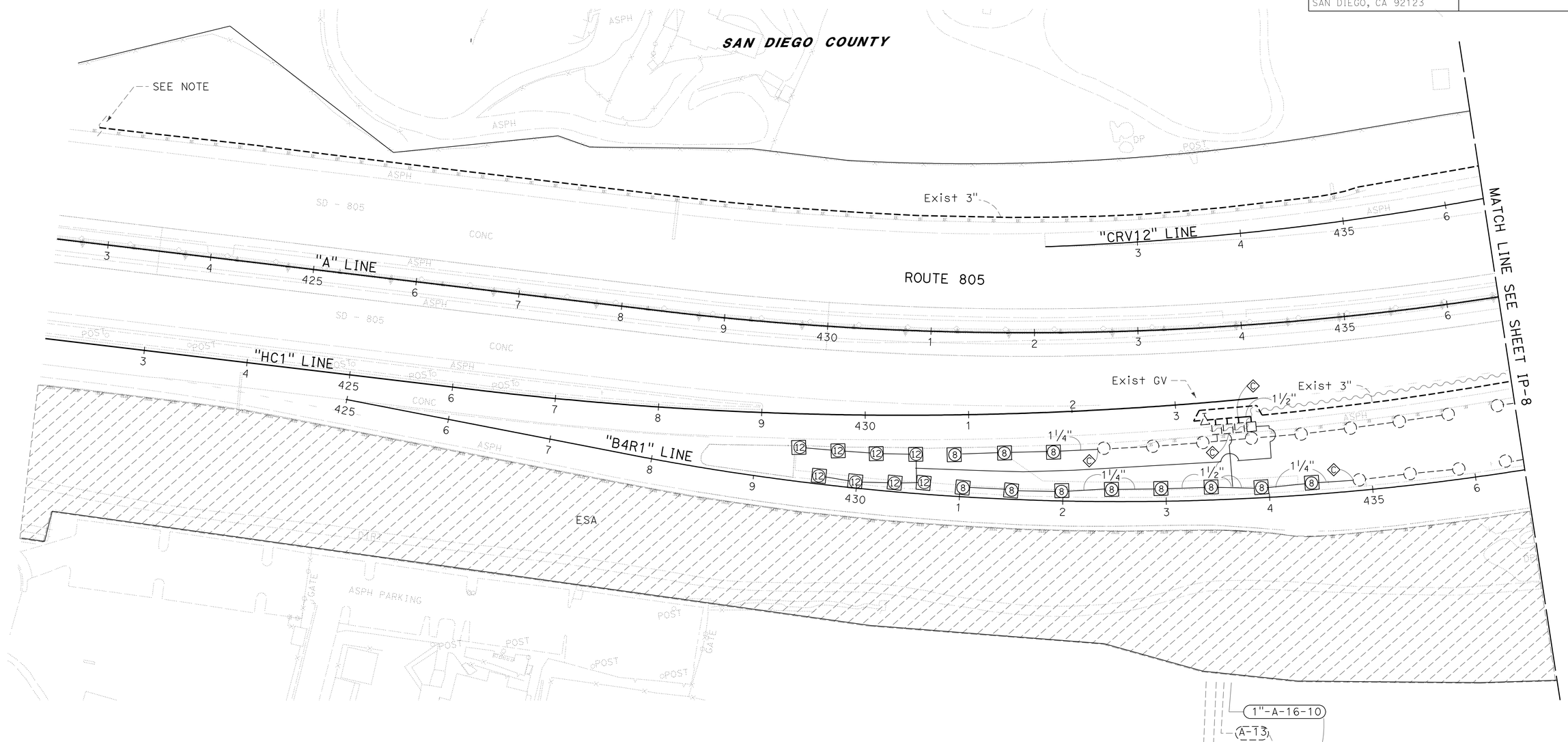

IRRIGATION PLAN

SCALE 1" = 50'

IP-7

APPROVED FOR IRRIGATION WORK ONLY.

STATE OF CALIFORNIA - DEPARTMENT OF TRANSPORTATION
Caltrans

CONSULTANT SENIOR LANDSCAPE ARCHITECT
EMILIO VIRAMONTES

CALCULATED-DESIGNED BY
CHECKED BY

JENA ADDENBROOKE
EMILIO VIRAMONTES

REVISED BY
DATE REVISED

LAST REVISION 08-29-11
DATE PLOTTED => 12-DEC-2011
TIME PLOTTED => 09:50

Dist	COUNTY	ROUTE	POST MILES TOTAL PROJECT	SHEET No.	TOTAL SHEETS
11	SD	54,805	1.8,5.5/9.4	412	635

LICENSED LANDSCAPE ARCHITECT

12-5-11
PLANS APPROVAL DATE

LICENSED LANDSCAPE ARCHITECT EMILIO L VIRAMONTES 10/31/12 08/12/11 STATE OF CALIFORNIA

THE STATE OF CALIFORNIA OR ITS OFFICERS OR AGENTS SHALL NOT BE RESPONSIBLE FOR THE ACCURACY OR COMPLETENESS OF SCANNED COPIES OF THIS PLAN SHEET.

DOKKEN ENGINEERING
5675 RUFFIN ROAD
SUITE 250
SAN DIEGO, CA 92123

NOTE:

FOR COMPLETE RIGHT OF WAY DATA, SEE RIGHT OF WAY RECORD MAPS AT DISTRICT OFFICE.

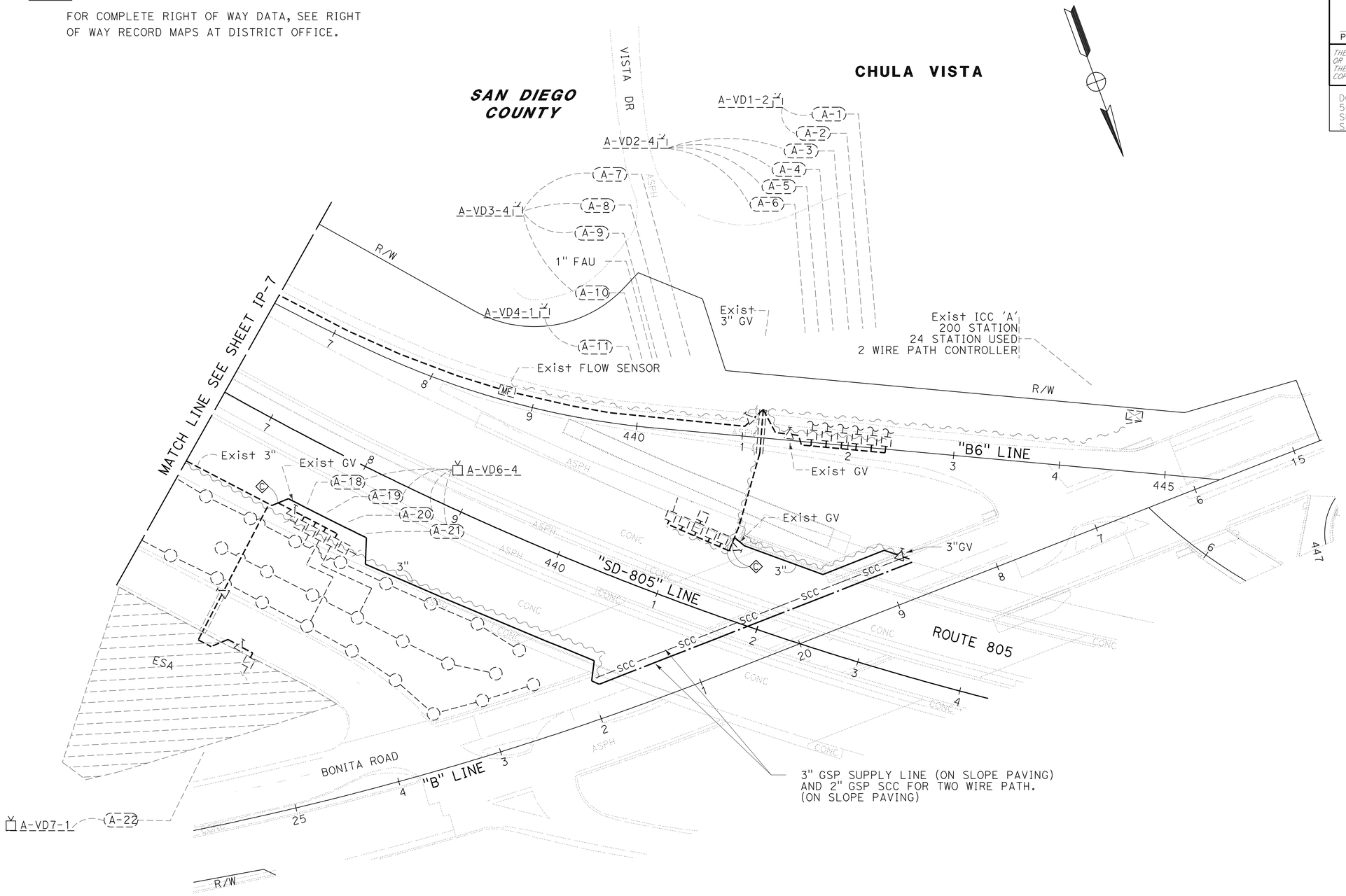

IRRIGATION PLAN

SCALE: 1" = 50'

IP-8

APPROVED FOR IRRIGATION WORK ONLY.

STATE OF CALIFORNIA - DEPARTMENT OF TRANSPORTATION

Caltrans

CONSULTANT SENIOR LANDSCAPE ARCHITECT: EMILIO VIRAMONTES

CALCULATED-DESIGNED BY: JENA ADDENBROOKE — EMILIO VIRAMONTES

CHECKED BY

REVISED BY

DATE REVISED

LAST REVISION 08-29-11

DATE PLOTTED => 12-DEC-2011
TIME PLOTTED => 09:50

Dist	COUNTY	ROUTE	POST MILES TOTAL PROJECT	SHEET No.	TOTAL SHEETS
11	SD	54,805	1.8,5.5/9.4	413	635

LICENSED LANDSCAPE ARCHITECT

12-5-11
PLANS APPROVAL DATE

LICENSED LANDSCAPE ARCHITECT MARLENE J. GROS No.2910 STATE OF CALIFORNIA
09/30/13 REGISTRATION EXPIRES
08/24/11 DATE

THE STATE OF CALIFORNIA OR ITS OFFICERS OR AGENTS SHALL NOT BE RESPONSIBLE FOR THE ACCURACY OR COMPLETENESS OF SCANNED COPIES OF THIS PLAN SHEET.

NOTES:

1. FOR ACCURATE RIGHT OF WAY AND ACCESS DATA, CONTACT RIGHT OF WAY ENGINEERING AT THE DISTRICT OFFICE.
2. Exist ICC AND SATELLITE CONTROLLERS 1(D) AND 1(E) ARE LOCATED AT NORTHEAST CORNER OF THE PARK AND RIDE FACILITY 600' SE OF 805/SWEETWATER ROAD INTERSECTION

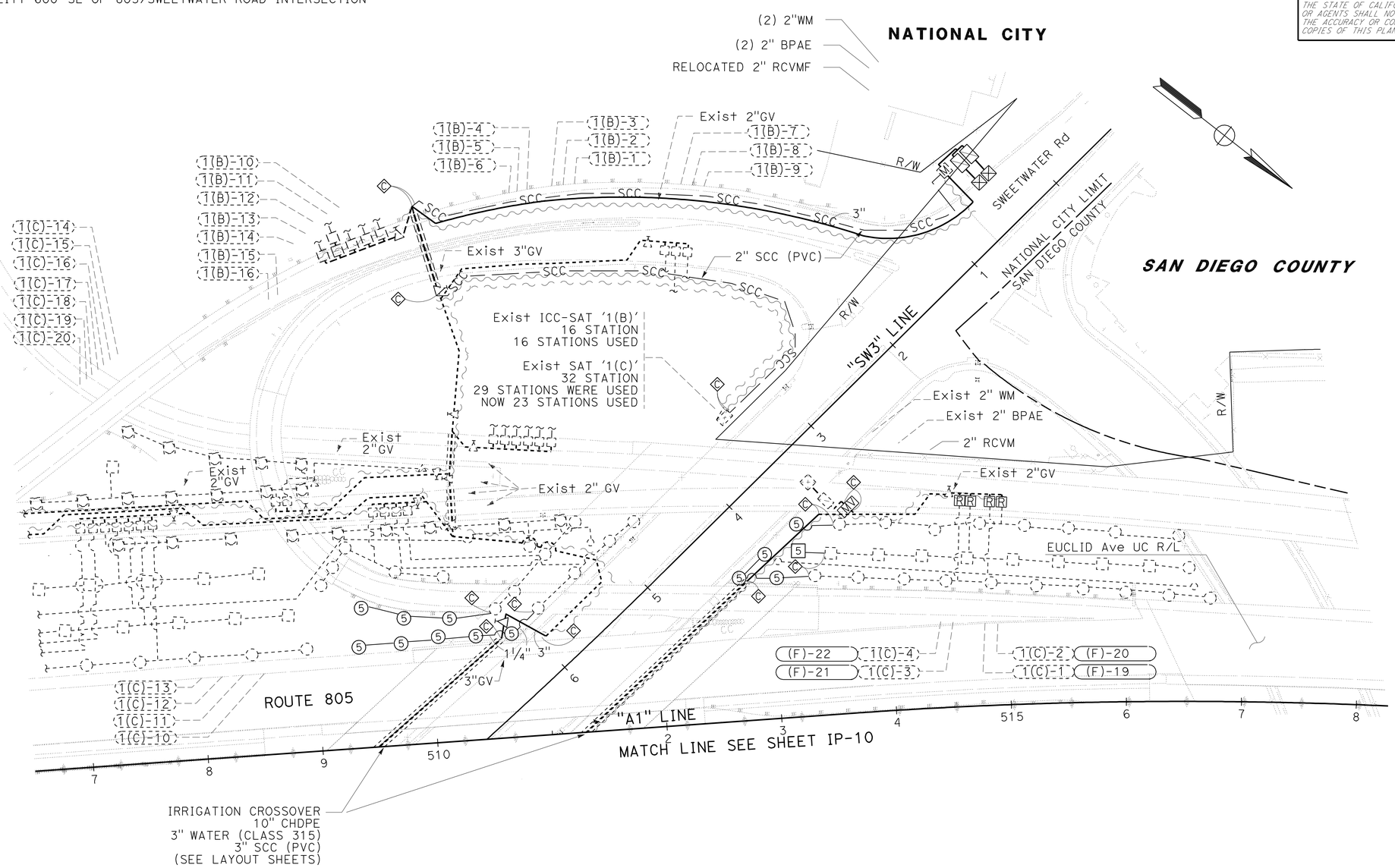

IRRIGATION PLAN

SCALE: 1" = 50'

IP-9

APPROVED FOR IRRIGATION WORK ONLY.

STATE OF CALIFORNIA - DEPARTMENT OF TRANSPORTATION
Caltrans® LANDSCAPE ARCHITECTURE

CONSULTANT SENIOR LANDSCAPE ARCHITECT: STEPHEN ALVAREZ

CALCULATED-DESIGNED BY: MARLENE GROS
CHECKED BY: EMILIO VIRAMONTES

REVISED BY
DATE REVISED

LAST REVISION 08-29-11
DATE PLOTTED => 12-DEC-2011
TIME PLOTTED => 09:50

Dist	COUNTY	ROUTE	POST MILES TOTAL PROJECT	SHEET No.	TOTAL SHEETS
11	SD	54,805	1.8,5.5/9.4	414	635

LICENSED LANDSCAPE ARCHITECT

12-5-11
PLANS APPROVAL DATE

LICENSED LANDSCAPE ARCHITECT MARLENE J. GROS No. 2910 STATE OF CALIFORNIA
09/30/13 Expiration Date
08/24/11 Date

THE STATE OF CALIFORNIA OR ITS OFFICERS OR AGENTS SHALL NOT BE RESPONSIBLE FOR THE ACCURACY OR COMPLETENESS OF SCANNED COPIES OF THIS PLAN SHEET.

NOTES:

1. FOR ACCURATE RIGHT OF WAY AND ACCESS DATA, CONTACT RIGHT OF WAY ENGINEERING AT THE DISTRICT OFFICE.
2. Exist ICC AND SATELLITE CONTROLLERS 1(D) AND 1(E) ARE LOCATED AT NORTHEAST CORNER OF THE PARK AND RIDE FACILITY 600' SE OF 805/SWEETWATER ROAD INTERSECTION

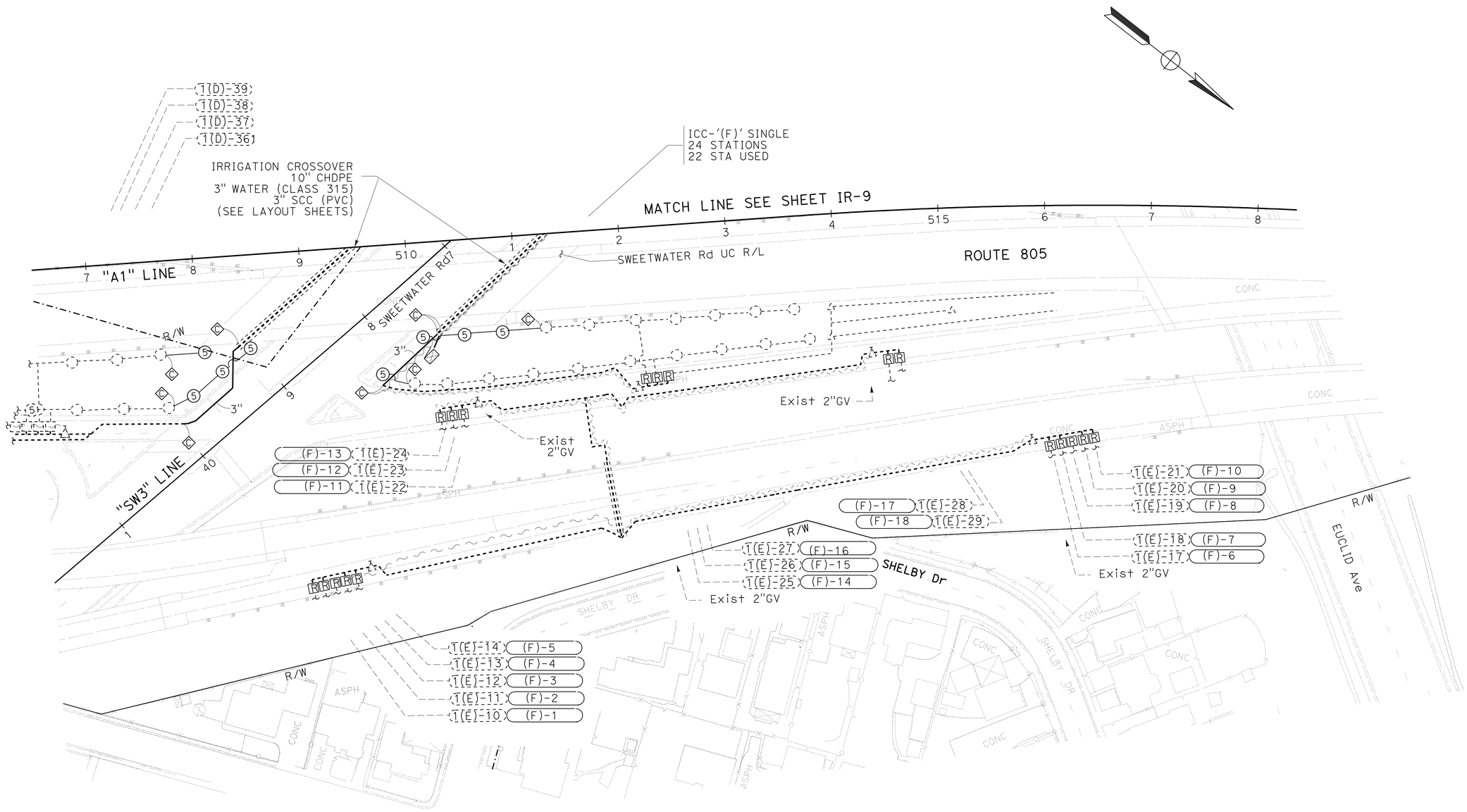

IRRIGATION PLAN

SCALE 1" = 50'

IP-10

APPROVED FOR IRRIGATION WORK ONLY.

STATE OF CALIFORNIA - DEPARTMENT OF TRANSPORTATION
Caltrans® LANDSCAPE ARCHITECTURE

CONSULTANT SENIOR LANDSCAPE ARCHITECT: STEPHEN ALVAREZ

CALCULATED-DESIGNED BY: MARLENE GROS
CHECKED BY: EMILIO VIRAMONTES

REVISED BY
DATE REVISED

LAST REVISION 08-29-11
DATE PLOTTED => 12-DEC-2011
TIME PLOTTED => 09:51

Dist	COUNTY	ROUTE	POST MILES TOTAL PROJECT	SHEET No.	TOTAL SHEETS
11	SD	54,805	1.8,5.5/9.4	415	635

LICENSED LANDSCAPE ARCHITECT

12-5-11
PLANS APPROVAL DATE

LICENSED LANDSCAPE ARCHITECT EMILIO L VIRAMONTES 10/31/12 08/12/11 STATE OF CALIFORNIA

THE STATE OF CALIFORNIA OR ITS OFFICERS OR AGENTS SHALL NOT BE RESPONSIBLE FOR THE ACCURACY OR COMPLETENESS OF SCANNED COPIES OF THIS PLAN SHEET.

DOKKEN ENGINEERING
5675 RUFFIN ROAD
SUITE 250
SAN DIEGO, CA 92123

SPRINKLER SCHEDULE

SYMBOL	TYPE	DESCRIPTION	SPRAY PATTERN	OPERATING PRESSURE (PSI)	PRESSURE COMPENSATING	PLUS / MINUS 5% ② DISCHARGE: GALLONS PER SECOND (GPS)	GALLONS PER MINUTE (GPM)	GALLONS PER HOUR (GPH)	RADIUS (F+)	WIDTH x LENGTH (F+)	MATERIAL	NOZZLE SIZE (INCH)	INLET CONNECTION (NPT) (DN IN INCHES)(INCH)	POSITIVE-LOCKING ADJ ARC STOP	BACKSPLASH PREVENTER	DIFFUSER PIN	DISTANCE CONTROL FLAP	ADJ DISCHARGE	RISER: TYPE	RISER MATERIAL: PLASTIC	RISER MATERIAL: GALVANIZED	RISER SIZE (IPS) (INCH)	RISER HEIGHT (INCH)	RISER FLOW SHUTOFF DEVICE	SWING JOINT (TYPE)	RISER SUPPORT	SPRINKLER PROTECTOR (TYPE)	REMARKS
5	A-5	GEAR DRIVEN	F	50	-	-	4	-	40	-	PL	-	¾	-	-	X	-	-	I	X	-	¾	6	-	1	-	-	③
⑤	A-5	GEAR DRIVEN	P	50	-	-	4	-	40	-	PL	-	¾	-	-	X	-	-	I	X	-	¾	6	-	1	-	-	③⑦
⑥	A-6	GEAR DRIVEN	P	50	-	-	4	-	40	-	PL	-	¾	-	-	X	-	-	-	-	-	-	-	-	1	-	1	③⑦ 12" POP-UP
7	A-7	GEAR DRIVEN	F	50	-	-	6.8	-	48	-	PL	-	¾	-	-	X	-	-	I	X	-	¾	6	-	1	-	-	③
⑦	A-7	GEAR DRIVEN	P	50	-	-	6.8	-	48	-	PL	-	¾	-	-	X	-	-	I	X	-	¾	6	-	1	-	-	③⑦
⑧	A-8	GEAR DRIVEN	P	50	-	-	6.8	-	48	-	PL	-	¾	-	-	X	-	-	-	-	-	-	-	-	1	-	1	③⑦ 12" POP-UP
⑫	A-12	GEAR DRIVEN	P	50	-	-	1.2	-	20	-	PL	-	¾	-	-	X	-	-	-	-	-	-	-	-	1	-	1	③⑦ 12" POP-UP

X IN BOX DENOTES REQUIREMENT

APPLICABLE WHEN CIRCLED BELOW:

1 - SEE SPECIAL PROVISIONS.
2 - IF A PRESSURE COMPENSATING DEVICE IS SPECIFIED, THE DISCHARGE AND RADII SHOWN REFLECT ITS USE.
③ - SHALL HAVE AN INTERNAL OR EXTERNAL CHECK VALVE.
4 - NON-ADJUSTABLE DISCHARGE RATE.
5 - REQUIRED ADJACENT TO SHOULDERS, CURBS, SIDEWALKS, AND DIKES.
6 - UNLESS OTHERWISE SHOWN ON PLANS.
⑦ - ADJUSTABLE ARC.
8 - MATCHED PRECIPITATION RATE NOZZLES.
9 - REFER TO PIPE SIZING CHARTS.

ABBREVIATIONS:

ADJ — ADJUSTABLE
B/B — BRASS/BRONZE
B/B/PL — BRASS/BRONZE/PLASTIC
B/PL — BRASS/PLASTIC
CST — CENTER STRIP
DN — DIAMETER NOMINAL
EST — END STRIP
F+ — FEET
F — FULL CIRCLE
F/P — FULL/PART CIRCLE
GPM — GALLONS PER MINUTE
H — HALF CIRCLE
IPS — IRON PIPE SIZE
NPT — NATIONAL PIPE THREAD
P — PART CIRCLE
PL — PLASTIC
PSI — POUNDS PER SQUARE INCH
Q — QUARTER CIRCLE
SST — SIDE STRIP
T — THIRD CIRCLE
VD — VALVE DECODER
HD — HYDROMETER

LEGEND:

— SCC — — 2" SPRINKLER CONTROL CONDUIT(SCC) .
RB — REPLACE VALVE BOX COVER
M — EXISTING REMOTE CONTROL MASTER WITH FLOW SENSOR (RCVMF)
MF — EXISTING FLOW SENSOR (HYDROMETER)
MV — 2" REMOTE CONTROL VALVE MASTER (RCVM)

NOTES:

1. ALL NEW LATERAL PIPE NOT LABELED SHALL BE 1 INCH, OR AS SHOWN ON PIPE SIZING CHARTS.
2. AT ALL RCV MANIFOLDS, PVC PIPE AND GATE VALVES SHALL BE 2" UNLESS OTHERWISE NOTED.
3. ALL SPRINKLER HEADS, VALVES, MAINLINE AND LATERAL LINE NEAR MVP LOCATIONS ARE TO BE INSTALLED OUTSIDE OF THE MVP AREA. VALVES TO BE INSTALLED AT EXITING END OF MVP. HEADS TO BE INSTALLED 6.5 FEET FROM AT ENTRANCE AND EXIT EDGES.
4. LOCATE VALVE MANIFOLDS AND MAINLINE OUTSIDE OF MAINTENANCE ACCESS AREAS.
5. ALL NEW MAINLINE PIPE WHICH HAS A CHANGE IN DIRECTION OF 90 DEGREES OR MORE SHALL HAVE (2)-45 DEGREE ELBOWS.

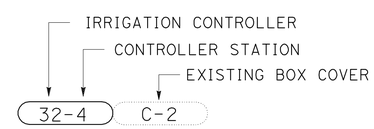

REPLACE VALVE BOX COVER

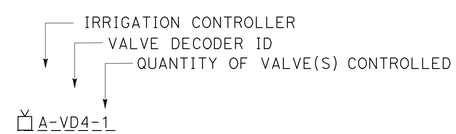

EXISTING VALVE DECODER CALL OUT
(TWO WIRE SYSTEM)

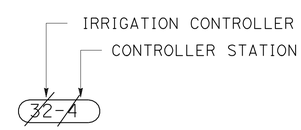

REMOVE EXISTING VALVE

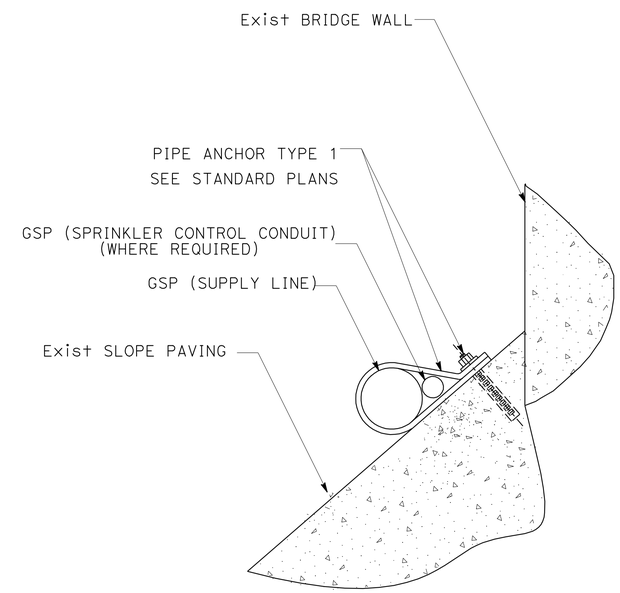

PIPE ANCHOR

SEE STANDARD DETAIL PIPE ANCHOR TYPE 1

LANDSCAPE DETAILS

NO SCALE

LD-1

LAST REVISION 08-29-11 | DATE PLOTTED => 09-DEC-2011 | TIME PLOTTED => 14:48

STATE OF CALIFORNIA - DEPARTMENT OF TRANSPORTATION
Caltrans

CONSULTANT SENIOR LANDSCAPE ARCHITECT: EMILIO VIRAMONTES
CALCULATED-DESIGNED BY: KATHRYN WALKER
CHECKED BY: EMILIO VIRAMONTES
REVISED BY
DATE REVISED

Dist	COUNTY	ROUTE	POST MILES TOTAL PROJECT	SHEET No.	TOTAL SHEETS
11	SD	54,805	1.8,5.5/9.4	416	635

LICENSED LANDSCAPE ARCHITECT

12-5-11
PLANS APPROVAL DATE

LICENSED LANDSCAPE ARCHITECT EMILIO L VIRAMONTES 10/31/12 08/12/11 STATE OF CALIFORNIA

THE STATE OF CALIFORNIA OR ITS OFFICERS OR AGENTS SHALL NOT BE RESPONSIBLE FOR THE ACCURACY OR COMPLETENESS OF SCANNED COPIES OF THIS PLAN SHEET.

DOKKEN ENGINEERING
5675 RUFFIN ROAD
SUITE 250
SAN DIEGO, CA 92123

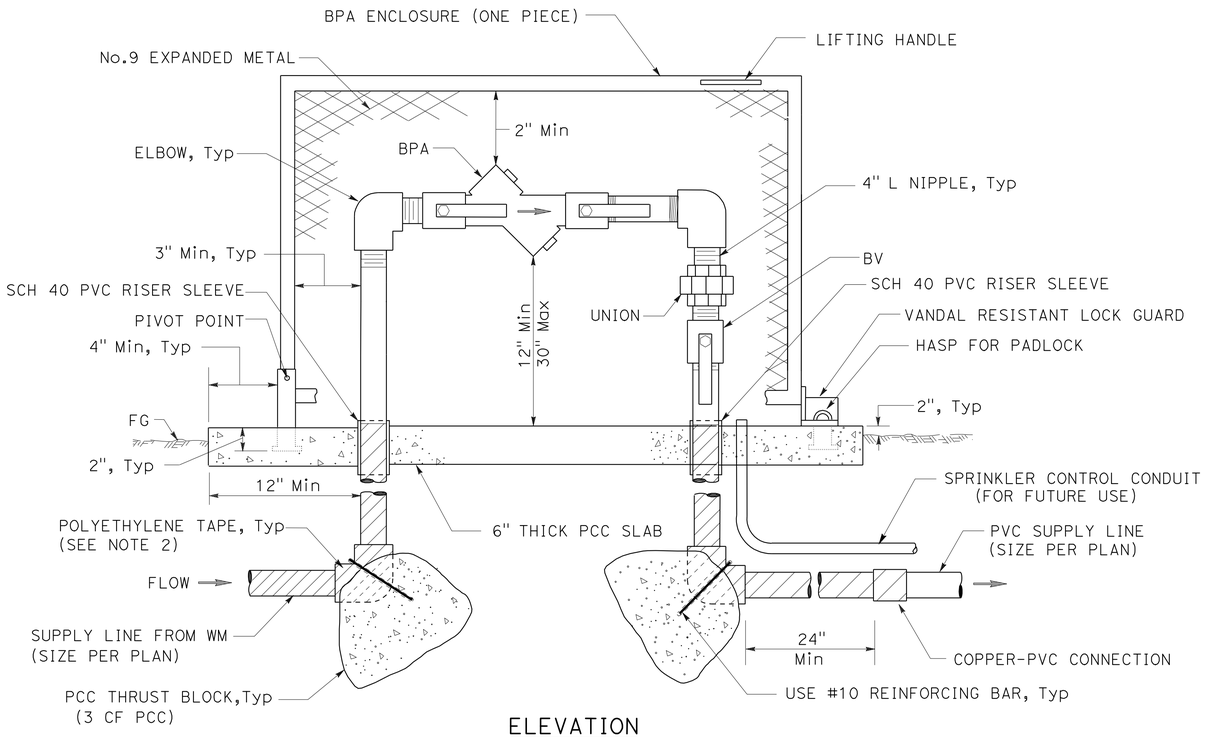

ELEVATION

NOTES:

1. WS AND FITTINGS SHALL BE SAME SIZE AS BACKFLOW PREVENTER SHOWN ON PLANS. BPA SHALL BE CONSTRUCTED WITH COPPER PIPE FROM WM THROUGH BPA TO CONNECTION TO PVC AS SHOWN ON DETAIL.
2. ALL METAL IN CONTACT WITH SOIL AND PCC SHALL BE POLYETHYLENE WRAPPED USING 2 INCH WIDE PLASTIC ADHESIVE TAPE 0.020 INCH THICK WITH 12 INCH OVERLAP.
3. EXPOSED COPPER PIPE SHALL BE PAINTED A TAN OR LIGHT BROWN COLOR TO MATCH ENCLOSURE.

BACKFLOW PREVENTER ASSEMBLY IN ENCLOSURE (BPAE) (MODIFIED)

NOTE:
EACH VD(BICODER) IS INSTALLED IN A SEPARATED VALVE BOX TO CONNECT TWO-WIRES PATH, RCV AND WIRES TO THE LIGHTNING ARRESTOR.

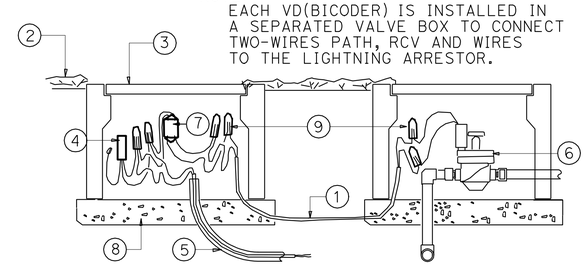

1. 2-WIRE CONDUCTOR TO RCV
2. FINISHED GRADE
3. Exist VALVE BOX
4. PROPOSED RED TO RED AND BLACK TO BLACK ENCAPSULATED IN WATER PROOF SPLICE CAP (3M DBR-6 OR EQUAL) IN POSITION AS SHOWN
5. PROPOSED TWO-WIRES PATH WITH 1" MINIMUM SIZE CONDUIT
6. PROPOSED 24 VOLT RCV AND VALVE BOX
7. Exist VALVE BICODER
8. GRAVELS-6" MINIMUM DEPTH
9. SPLICE CONNECTORS

EXISTING VALVE BICODER WITH CONNECTION TO PROPOSED RCV A-16 LOCATED NB 805 "A" Sta. 433+50

NOTE:
EACH VD(BICODER) IS INSTALLED IN A SEPARATED VALVE BOX TO CONNECT TWO-WIRES PATH, RCV AND WIRES TO THE LIGHTNING ARRESTOR.

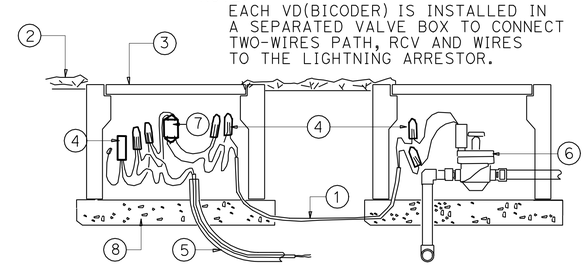

1. Exist 2-WIRE CONDUCTOR TO RCV
2. FINISHED GRADE
3. Exist VALVE BOX
4. PROPOSED RED TO RED AND BLACK TO BLACK ENCAPSULATED IN WATER PROOF SPLICE CAP (3M DBR-6 OR EQUAL) IN POSITION AS SHOWN
5. PROPOSED TWO-WIRES PATH WITH 1" MINIMUM SIZE CONDUIT
6. Exist 24 VOLT RCV
7. Exist VALVE BICODER
8. GRAVELS-6" MINIMUM DEPTH

EXISTING VALVE BICODER WITH CONNECTION TO EXISTING RCVS A-13 TO A-15 AND A-18 TO A-22 LOCATED NB 805 "A" Sta. 433+50 TO 438+50

LANDSCAPE DETAILS

NO SCALE

LD-2

STATE OF CALIFORNIA - DEPARTMENT OF TRANSPORTATION
Caltrans

CONSULTANT SENIOR LANDSCAPE ARCHITECT: EMILIO VIRAMONTES
CALCULATED-DESIGNED BY: KATHRYN WALKER
CHECKED BY: EMILIO VIRAMONTES
REVISED BY
DATE REVISED

LAST REVISION 08-29-11
DATE PLOTTED => 09-DEC-2011
TIME PLOTTED => 14:48

Dist	COUNTY	ROUTE	POST MILES TOTAL PROJECT	SHEET No.	TOTAL SHEETS
11	SD	54,805	1.8,5.5/9.4	417	635

LICENSED LANDSCAPE ARCHITECT

12-5-11
PLANS APPROVAL DATE

LICENSED LANDSCAPE ARCHITECT
EMILIO L VIRAMONTES
10/31/12
08/12/11
STATE OF CALIFORNIA

THE STATE OF CALIFORNIA OR ITS OFFICERS OR AGENTS SHALL NOT BE RESPONSIBLE FOR THE ACCURACY OR COMPLETENESS OF SCANNED COPIES OF THIS PLAN SHEET.

DOKKEN ENGINEERING
5675 RUFFIN ROAD
SUITE 250
SAN DIEGO, CA 92123

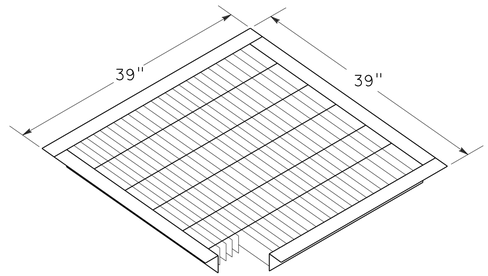

STEEL GRATE

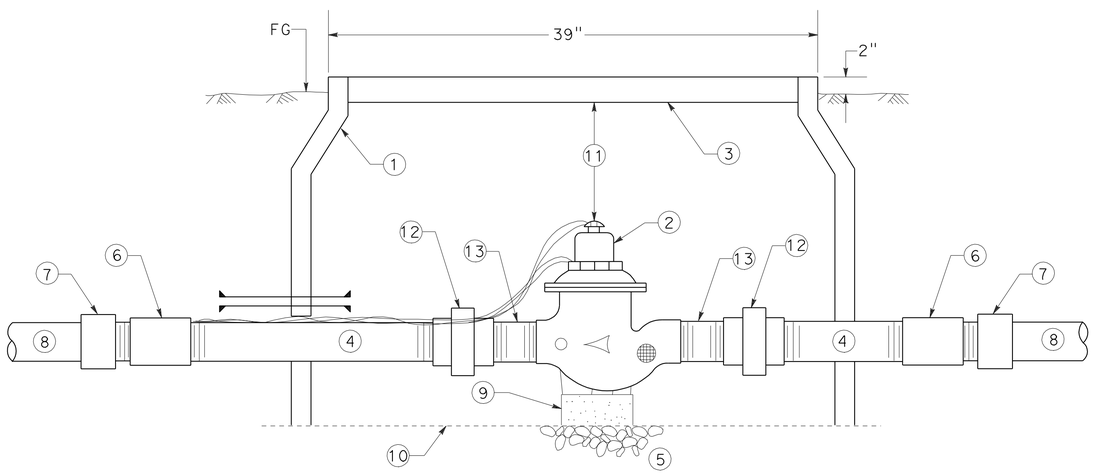

RELOCATED 2" REMOTE CONTROL VALVE (MASTER) WITH FLOW METER (RCVMF)

1. 39"X 39"X 30"DEEP POLY VAULT
2. RELOCATED 2" REMOTE CONTROL VALVE (MASTER) WITH FLOW METER (RCVMF)
3. 39"X 39" GALV STEEL GRATE (SEE DETAIL)
4. COPPER OR B/B (LENGTH AS REQUIRED) (SIZE PER PLAN)
5. ¾" CRUSHED GRAVEL SUMP (12" DEEP)
6. COPPER OR B/B COUPLING
7. T X S ADAPTER
8. PVC PIPE (SIZE PER PLAN) (DEPTH PER SPECIFICATIONS)
9. 4"X8"X16" PCC BLOCK
10. WOVEN WIRE CLOTH
11. 4" Min-7" Max
12. COPPER OR B/B UNION
13. COPPER OR B/B NIPPLE (6" LONG)

THRUST BLOCK DETAIL

INSTALLATION	TYPE FITTING	INSTALLATION	TYPE FITTING
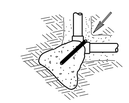	90° ELL	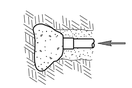	DEAD END
	BEND 45° 22.5° 11.25°		GATE VALVE
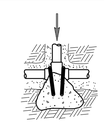	TEE	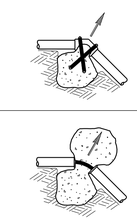	VERTICAL BEND (TYPE I) 45° 22.5° 11.25° OR
			VERTICAL BEND (TYPE II) 45° 22.5° 11.25°

NOTES:

Min 1 CF PCC FOR 1½" PIPE SIZE AND SMALLER.
Min 2 CF PCC FOR 2" PIPE SIZE.
Min 3 CF PCC FOR 3" AND 4" PIPE SIZE.
USE #3 REINFORCING BAR WHERE SHOWN.

LANDSCAPE DETAILS

NO SCALE

LD-3

REVISED BY	DATE REVISED
KATHRYN WALKER	EMILIO VIRAMONTES
CALCULATED-DESIGNED BY	CHECKED BY
CONSULTANT SENIOR LANDSCAPE ARCHITECT	EMILIO VIRAMONTES

STATE OF CALIFORNIA - DEPARTMENT OF TRANSPORTATION
Caltrans

LAST REVISION 08-29-11 | DATE PLOTTED => 09-DEC-2011 | TIME PLOTTED => 14:48

Dist	COUNTY	ROUTE	POST MILES TOTAL PROJECT	SHEET No.	TOTAL SHEETS
11	SD	54,805	1.8,5.5/9.4	418	635

Héctor A. Santamaría 08-25-11
REGISTERED ELECTRICAL ENGINEER DATE

12-5-11
PLANS APPROVAL DATE

REGISTERED PROFESSIONAL ENGINEER HECTOR A. SANTAMARIA No. 18207 Exp. 12-31-11 ELECTRICAL STATE OF CALIFORNIA

THE STATE OF CALIFORNIA OR ITS OFFICERS OR AGENTS SHALL NOT BE RESPONSIBLE FOR THE ACCURACY OR COMPLETENESS OF SCANNED COPIES OF THIS PLAN SHEET.

NOTES (TSO):

1 -EXTEND PULL BOX 2" (Min) BELOW THE BOTTOM OF THE CONDUIT. CONDUIT BENDS SHALL BE AT AN ANGLE OF 22.5 DEGREES. TRAFFIC PULL BOX SHALL BE MARKED "FIBER OPTIC".

2 -CONDUIT INSIDE OF CONCRETE BARRIER.

3 -FOR COMPLETE RIGHT OF WAY AND ACCURATE ACCESS DATA, SEE RIGHT OF WAY RECORDS MAPS AT DISTRICT OFFICE.

LEGEND

S=SIGN LIGHTING
N C =NO CHANGE EXISTING CONDUIT
SDG&E=SAN DIEGO GAS AND ELECTRIC COMPANY
TSO=THIS SHEET ONLY
WIM=WEIGH IN MOTION SYSTEM
MVDS=MICROWAVE VEHICLE DETECTION SYSTEM
CON=CONTACTOR
OCC=OUTDOOR CATEGORY 5e CABLE
STC=SCREENED TRANSMISSION CABLE
SLC=SCALE LEAD-IN CABLE
slc=EXISTING SCALE LEAD-IN CABLE

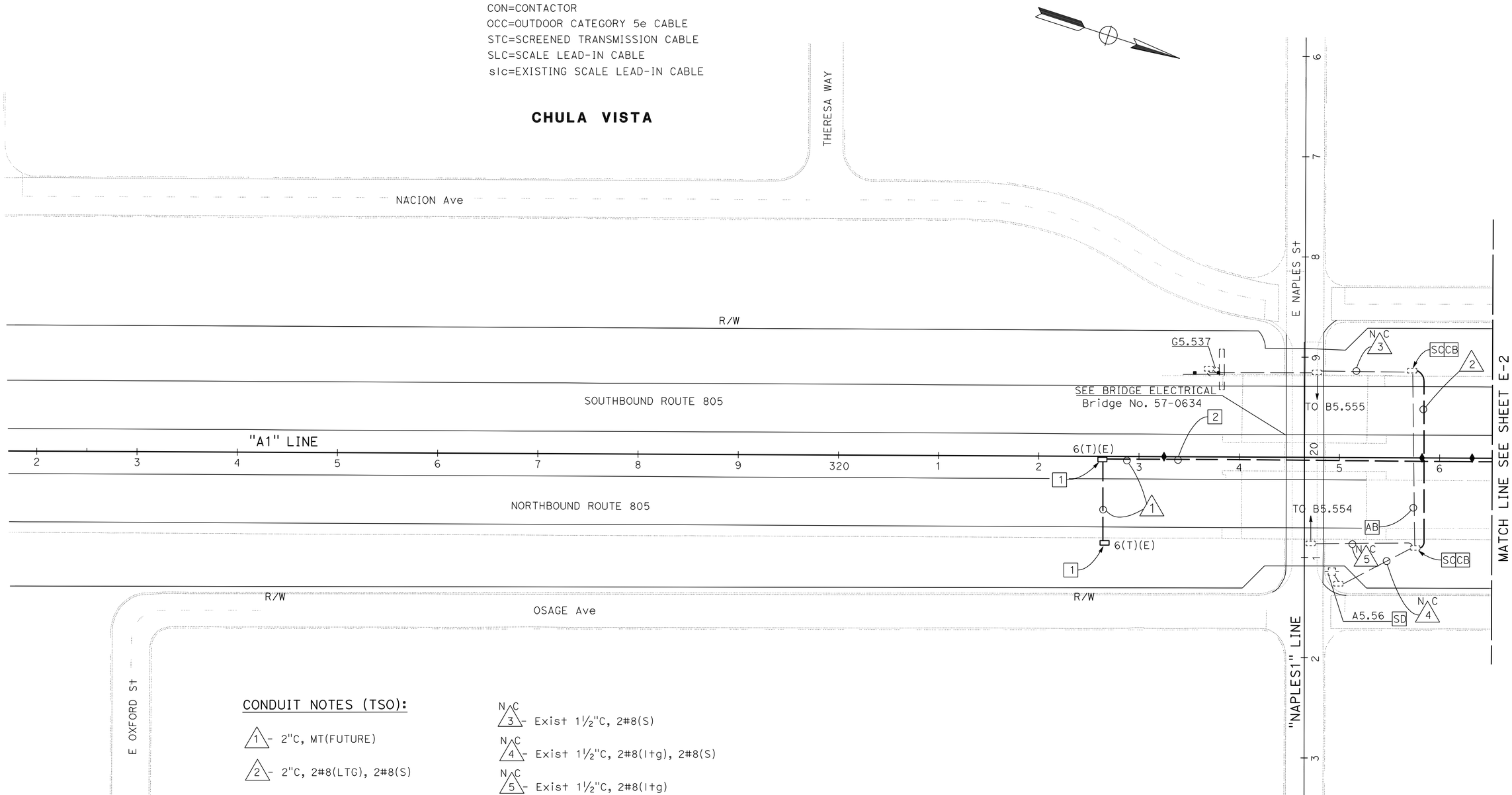

CONDUIT NOTES (TSO):

1 - 2"C, MT(FUTURE)

2 - 2"C, 2#8(LTG), 2#8(S)

N C 3 - Exist 1½"C, 2#8(S)

N C 4 - Exist 1½"C, 2#8(lTg), 2#8(S)

N C 5 - Exist 1½"C, 2#8(lTg)

APPROVED FOR ELECTRICAL WORK ONLY

LIGHTING AND SIGN ILLUMINATION

SCALE: 1" = 50'

E-1

STATE OF CALIFORNIA - DEPARTMENT OF TRANSPORTATION
Caltrans® TRAFFIC ELECTRICAL

FUNCTIONAL SUPERVISOR: DALE WILSON
CALCULATED-DESIGNED BY: HECTOR SANTAMARIA
CHECKED BY: ENRIQUE BERNAL
REVISED BY
DATE REVISED

LAST REVISION 09-26-11
DATE PLOTTED => 09-DEC-2011
TIME PLOTTED => 16:14

Dist	COUNTY	ROUTE	POST MILES TOTAL PROJECT	SHEET No.	TOTAL SHEETS
11	SD	54,805	1.8,5.5/9.4	419	635

Héctor A. Santamaría 08-25-11
REGISTERED ELECTRICAL ENGINEER DATE

12-5-11
PLANS APPROVAL DATE

REGISTERED PROFESSIONAL ENGINEER HECTOR A. SANTAMARIA No. 18207 Exp. 12-31-11 ELECTRICAL STATE OF CALIFORNIA

THE STATE OF CALIFORNIA OR ITS OFFICERS OR AGENTS SHALL NOT BE RESPONSIBLE FOR THE ACCURACY OR COMPLETENESS OF SCANNED COPIES OF THIS PLAN SHEET.

CONDUIT NOTES (TSO):

1 - Exist 1½"C, 1 sic. ADD 1 OCC

2 - 2"C, 2#8(CCTV)

3 - Exist 1½"C, 2#8(WIM). ADD 2#8(CCTV)

4 - 3"C, CAMERA CABLE

5 - 2"C, MT. (FUTURE)

6 - 2"C, 1 OCC

7 - 2"C, 2#8(LTG), 2#8(S), 4#14(PEU)

8 - 2"C, MT. (CONDUCTORS BY OTHERS)

9 - 2"C, 2#8(LTG), 2#1 (LTG-HOV) 4#8(S), 4#14(PEU)

10 - 2"C, 2#8(LTG)

N C 11 - Exist 1½"C, 2#8(l+g)

12 - 2"C, 2#8(S-HOV), 2#1(LTG-HOV)

13 - Exist 1½"C, 2#8(s). ADD 4#14(PEU)

N C 14 - Exist 1½"C, 2#8(s), 2#8(l+g)

15 - Exist 1½"C, 2#8(WIM)(reused)

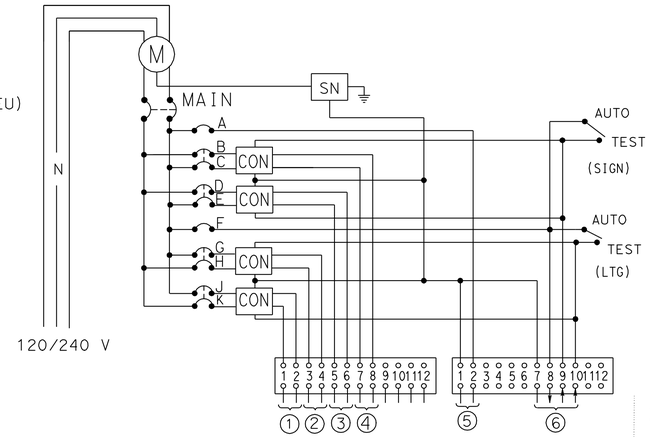

CIRCUIT BREAKERS

MAIN-2P-200 A
A 1P-15 A
B, C } 2P-30 A
D, E } 2P-30 A
F 1P-15 A
G, H } 2P-30 A
J, K } 2P-30 A

1 - LIGHTING(HOV)
2 - LIGHTING
3 - SIGN
4 - SIGN(HOV)
5 - SPARE
6 - PEU

WIRING DIAGRAM "A" A5.79
(TYPE III-BF SERVICE EQUIPMENT ENCLOSURE
SEE RSP ES-2C & RSP ES-2E)

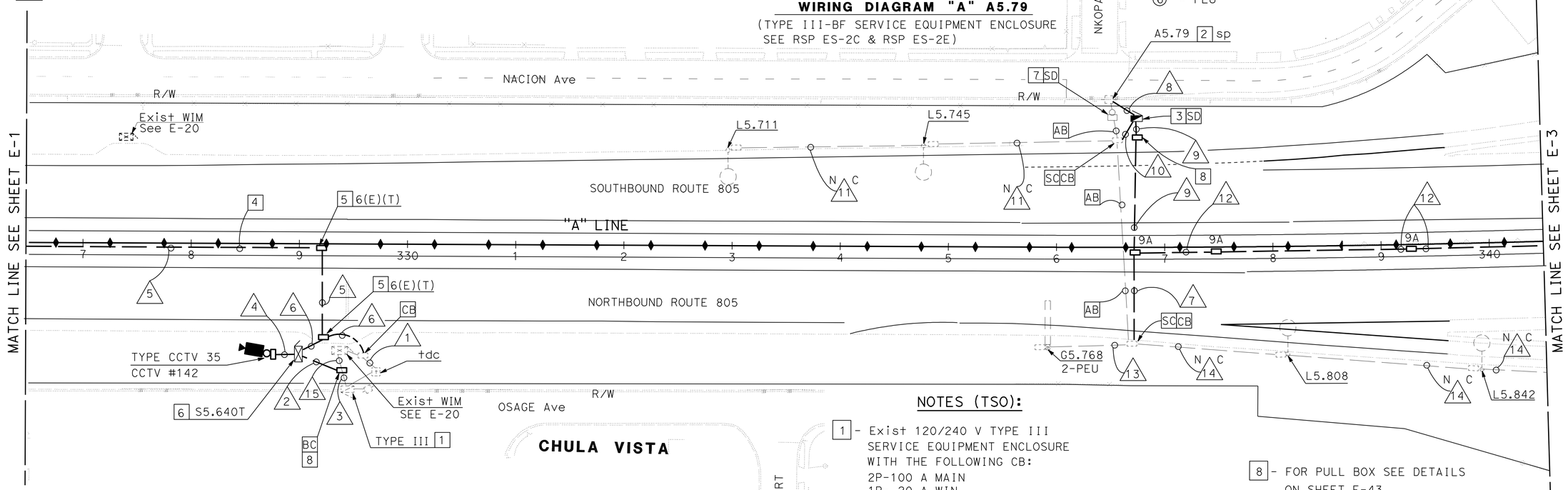

NOTES (TSO):

1 - Exist 120/240 V TYPE III SERVICE EQUIPMENT ENCLOSURE WITH THE FOLLOWING CB:
2P-100 A MAIN
1P- 20 A WIN
1P- 20 A TDC
ADD: 1P- 30 A CIRCUIT BREAKER AND LABEL CCTV#142

2 - INSTALL TYPE "H" CONDUIT RISER PER SDG&E REQUIREMENTS.

3 - SEE WIRING DIAGRAM "A" ON THIS SHEET.

4 - CONDUIT INSIDE OF CONCRETE BARRIER.

5 - EXTEND PULL BOX 2" (Min) BELOW THE BOTTOM OF THE CONDUIT. CONDUIT BENDS SHALL BE AT AN ANGLE OF 22.5 DEGREES. TRAFFIC PULL BOX SHALL BE MARKED "FIBER OPTIC".

6 - CCTV CABINET SEE ELECTRICAL DETAILS. CONSTRUCT FOUNDATION PER Std PLAN ES-3C.

7 - RC EXISTING TYPE "A" SERVICE.

8 - FOR PULL BOX SEE DETAILS ON SHEET E-43.

9 - FOR ACCURATE RIGHT OF WAY AND ACCESS DATA, CONTACT RIGHT OF WAY ENGINEERING AT THE DISTRICT OFFICE.

APPROVED FOR ELECTRICAL WORK ONLY

SCALE: 1" = 50'

LIGHTING AND SIGN ILLUMINATION
CLOSED CIRCUIT TELEVISION SYSTEM
(LOCATION 1)

E-2

STATE OF CALIFORNIA - DEPARTMENT OF TRANSPORTATION
Caltrans® TRAFFIC ELECTRICAL

FUNCTIONAL SUPERVISOR: DALE WILSON
CALCULATED-DESIGNED BY: HECTOR SANTAMARIA
CHECKED BY: ENRIQUE BERNAL
REVISED BY / DATE REVISED

LAST REVISION 09-26-11
DATE PLOTTED => 12-DEC-2011
TIME PLOTTED => 12:31

Dist	COUNTY	ROUTE	POST MILES TOTAL PROJECT	SHEET No.	TOTAL SHEETS
11	SD	54,805	1.8,5.5/9.4	420	635

Héctor A. Santamaría 08-25-11
REGISTERED ELECTRICAL ENGINEER DATE

12-5-11
PLANS APPROVAL DATE

REGISTERED PROFESSIONAL ENGINEER HECTOR A. SANTAMARIA No. 18207 Exp. 12-31-11 ELECTRICAL STATE OF CALIFORNIA

THE STATE OF CALIFORNIA OR ITS OFFICERS OR AGENTS SHALL NOT BE RESPONSIBLE FOR THE ACCURACY OR COMPLETENESS OF SCANNED COPIES OF THIS PLAN SHEET.

ILLUMINATED SIGNS AND APPURTENANCES

SIGN No.	ISL FIXTURES	VOLTAGE (SERVICE)	LOAD	REMARKS
1	2	240 V	174 W	SC1A SIGN CONTROL, SEE Std PLANS ES-15C, RSP ES-15D

CONDUIT NOTES (TSO):

1 - 2"C, 2#1(LTG), 2#8(S)

2 - 2"C, 2#8(LTG), 2#4(S)

N C 3 - Exist 1½"C, 2#8(ltg), 2#8(s)

4 - 2"C, 2#10(ICC)

5 - Exist 3"C, 2#14(fb), 1 dlc.
ADD 2#10(ICC).

6 - Exist 2-3"C, 2#14(fb), 2-9csc, 1-12csc, 25 dlc.
ADD 2#10(ICC).

N C 7 - Exist 2"C, 1 occ

8 - Exist 2"C, 2#8 (rm).
ADD 2#10(ICC)

N C 9 - Exist 1½"C, 2#8(ltg), 2#8(S)

N C 10 - Exist 1½"C, 2#8(S)

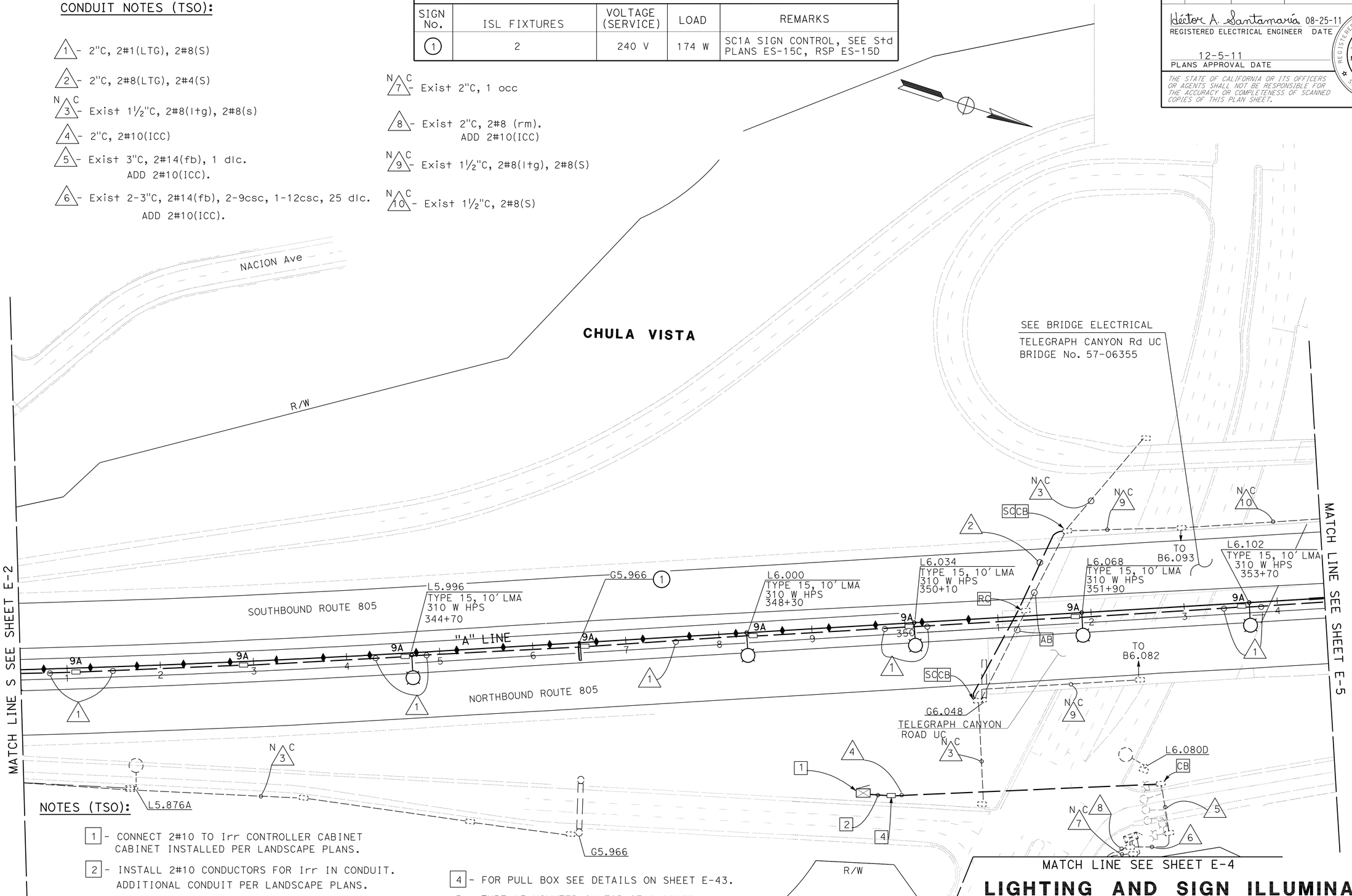

NOTES (TSO):

1 - CONNECT 2#10 TO Irr CONTROLLER CABINET CABINET INSTALLED PER LANDSCAPE PLANS.

2 - INSTALL 2#10 CONDUCTORS FOR Irr IN CONDUIT. ADDITIONAL CONDUIT PER LANDSCAPE PLANS.

3 - FOR COMPLETE RIGHT OF WAY AND ACCURATE ACCESS DATA, SEE RIGHT OF WAY RECORDS MAPS AT DISTRICT OFFICE.

4 - FOR PULL BOX SEE DETAILS ON SHEET E-43.

5 - TYPE 15 MOUNTED ON TOP OF BARRIER SEE CONSTRUCTION DETAILS.

APPROVED FOR ELECTRICAL WORK ONLY

SCALE: 1" = 50'

LIGHTING AND SIGN ILLUMINATION

E-3

STATE OF CALIFORNIA - DEPARTMENT OF TRANSPORTATION
Caltrans TRAFFIC ELECTRICAL

FUNCTIONAL SUPERVISOR: DALE WILSON
CALCULATED-DESIGNED BY: HECTOR SANTAMARIA
CHECKED BY: ENRIQUE BERNAL
REVISED BY
DATE REVISED

LAST REVISION 09-26-11
DATE PLOTTED => 09-DEC-2011
TIME PLOTTED => 16:14

Dist	COUNTY	ROUTE	POST MILES TOTAL PROJECT	SHEET No.	TOTAL SHEETS
11	SD	54, 805	1.8, 5.5/9.4	421	635

Héctor A. Santamaría 08-25-11
REGISTERED ELECTRICAL ENGINEER DATE

12-5-11
PLANS APPROVAL DATE

REGISTERED PROFESSIONAL ENGINEER
HECTOR A. SANTAMARIA
No. 18207
Exp. 12-31-11
ELECTRICAL
STATE OF CALIFORNIA

THE STATE OF CALIFORNIA OR ITS OFFICERS OR AGENTS SHALL NOT BE RESPONSIBLE FOR THE ACCURACY OR COMPLETENESS OF SCANNED COPIES OF THIS PLAN SHEET.

CONDUIT NOTES (TSO):

1 -Exist 1½C", 2#6 (ts), 2#10 (ltg), 3#12 (tdc), 2#8(rm).
ADD 2#10 (ICC)

N C 2 -Exist 2"C, 1 occ

3 -Exist 2"C, 2#8 (rm).
ADD 2#10 (ICC)

N C 4 -Exist 1"C, 3#12 (tdc)

N C 5 -Exist 1"C, 1 sic, 1 occ

N C 6 -Exist 2"C, 1 sic

NOTE (TSO):

1 Exist 120/240 V, 1 PHASE, 3-WIRE, TYPE III-BF
SERVICE EQUIPMENT ENCLOSURE
WITH THE FOLLOWING CB:
MAIN 2P-100 A MAIN
1P-50 A SIGNAL
1P-20 A IRRIGATION
2P-30 A SIGN/LIGHTING
2P-30 A HIGHWAY LIGHTING
1P-15 A CONTROL
ADD 1P-20 A AND LABEL (ICC)

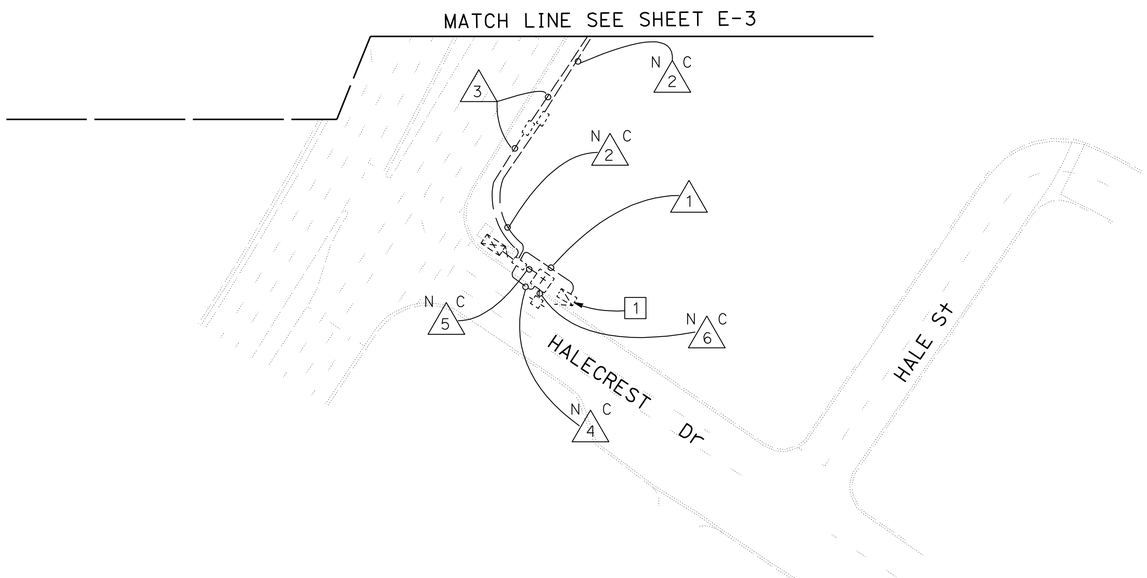

LIGHTING AND SIGN ILLUMINATION

E-4

APPROVED FOR ELECTRICAL WORK ONLY

SCALE: 1" = 50'

STATE OF CALIFORNIA - DEPARTMENT OF TRANSPORTATION
Caltrans® **TRAFFIC ELECTRICAL**

FUNCTIONAL SUPERVISOR: DALE WILSON
CALCULATED-DESIGNED BY: HECTOR SANTAMARIA
CHECKED BY: ENRIQUE BERNAL
REVISED BY / DATE REVISED

LAST REVISION 09-26-11
DATE PLOTTED => 09-DEC-2011
TIME PLOTTED => 15:33

Dist	COUNTY	ROUTE	POST MILES TOTAL PROJECT	SHEET No.	TOTAL SHEETS
11	SD	54, 805	1.8, 5.5/9.4	422	635

Héctor A. Santamaría 08-25-11
REGISTERED ELECTRICAL ENGINEER DATE

12-5-11
PLANS APPROVAL DATE

REGISTERED PROFESSIONAL ENGINEER
HECTOR A. SANTAMARIA
No. 18207
Exp. 12-31-11
ELECTRICAL
STATE OF CALIFORNIA

THE STATE OF CALIFORNIA OR ITS OFFICERS OR AGENTS SHALL NOT BE RESPONSIBLE FOR THE ACCURACY OR COMPLETENESS OF SCANNED COPIES OF THIS PLAN SHEET.

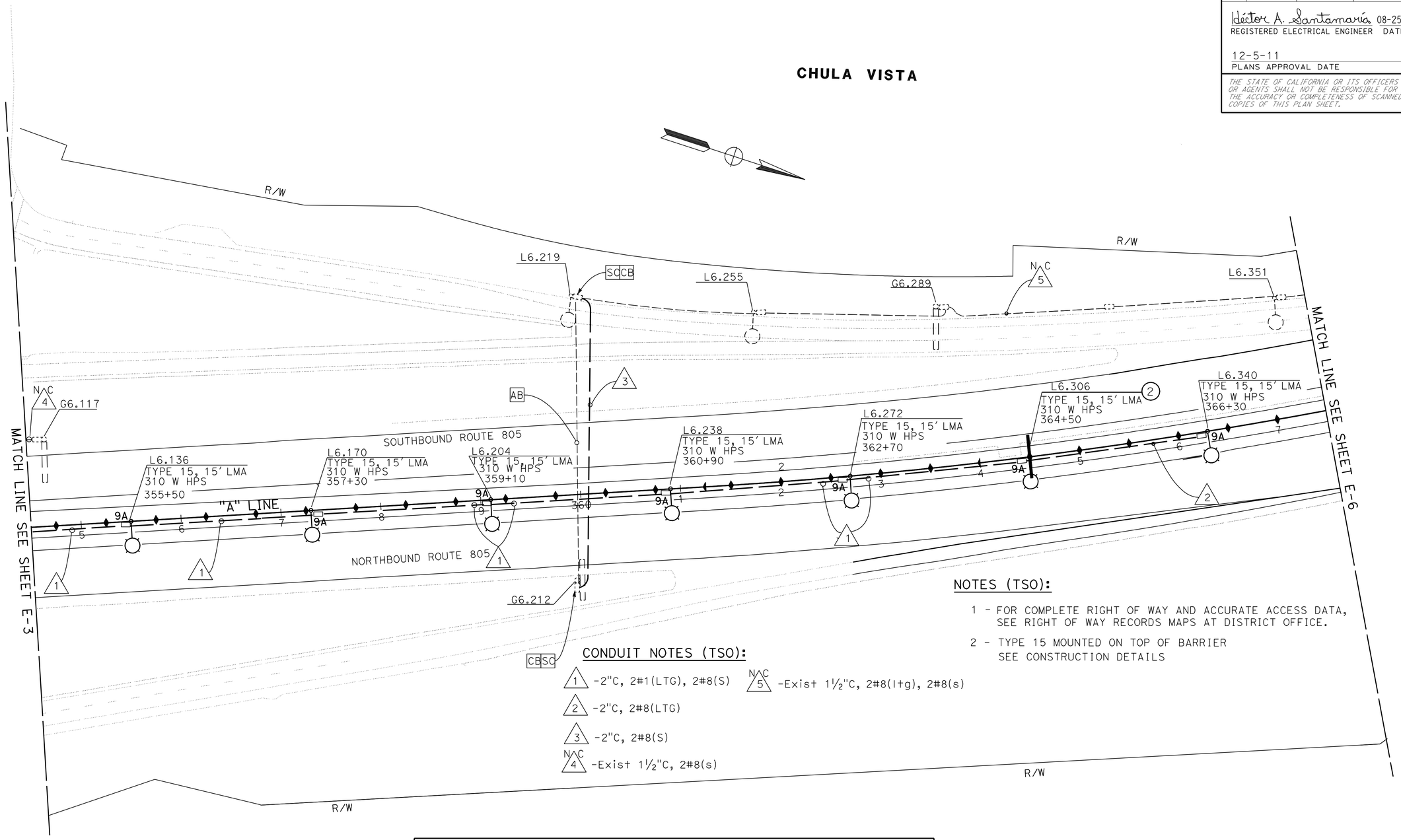

NOTES (TSO):

1 - FOR COMPLETE RIGHT OF WAY AND ACCURATE ACCESS DATA, SEE RIGHT OF WAY RECORDS MAPS AT DISTRICT OFFICE.

2 - TYPE 15 MOUNTED ON TOP OF BARRIER SEE CONSTRUCTION DETAILS

CONDUIT NOTES (TSO):

1 -2"C, 2#1(LTG), 2#8(S)

2 -2"C, 2#8(LTG)

3 -2"C, 2#8(S)

N C 4 -Exist 1½"C, 2#8(s)

N C 5 -Exist 1½"C, 2#8(l+g), 2#8(s)

ILLUMINATED SIGNS AND APPURTENANCES

SIGN No.	ISL FIXTURES	VOLTAGE (SERVICE)	LOAD	REMARKS
2	2	240 V	174 W	SC1A SIGN CONTROL, SEE Std PLANS ES-15C, RSP ES-15D

LIGHTING AND SIGN ILLUMINATION

APPROVED FOR ELECTRICAL WORK ONLY

SCALE: 1" = 50'

E-5

STATE OF CALIFORNIA - DEPARTMENT OF TRANSPORTATION
Caltrans® TRAFFIC ELECTRICAL

FUNCTIONAL SUPERVISOR: DALE WILSON
CALCULATED-DESIGNED BY: HECTOR SANTAMARIA
CHECKED BY: ENRIQUE BERNAL
REVISED BY
DATE REVISED

LAST REVISION 09-26-11
DATE PLOTTED => 09-DEC-2011
TIME PLOTTED => 15:33

Dist	COUNTY	ROUTE	POST MILES TOTAL PROJECT	SHEET No.	TOTAL SHEETS
11	SD	54, 805	1.8, 5.5/9.4	423	635

Héctor A. Santamaría 08-25-11
REGISTERED ELECTRICAL ENGINEER DATE

12-5-11
PLANS APPROVAL DATE

REGISTERED PROFESSIONAL ENGINEER
HECTOR A. SANTAMARIA
No. 18207
Exp. 12-31-11
ELECTRICAL
STATE OF CALIFORNIA

THE STATE OF CALIFORNIA OR ITS OFFICERS OR AGENTS SHALL NOT BE RESPONSIBLE FOR THE ACCURACY OR COMPLETENESS OF SCANNED COPIES OF THIS PLAN SHEET.

CONDUIT NOTES (TSO):

N C 1 -Exist 1½"C, 2#8(s), 2#8(ltg)

2 -2"C, 2#8(S), 2#8(LTG)

N C 3 -Exist 1½"C, 2#8(s)

N C 4 -Exist 1½"C, 2#6(service)

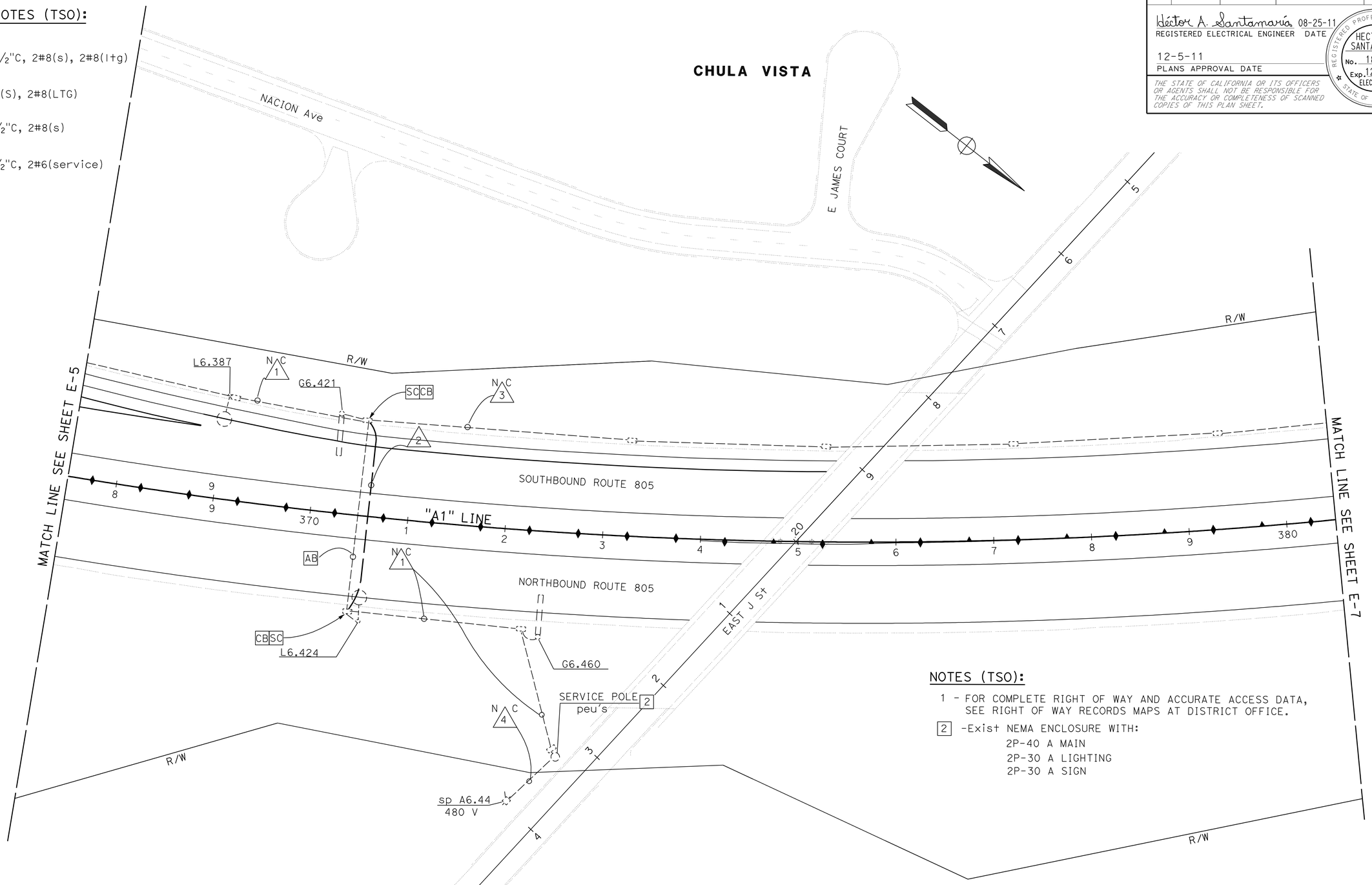

NOTES (TSO):

1 - FOR COMPLETE RIGHT OF WAY AND ACCURATE ACCESS DATA, SEE RIGHT OF WAY RECORDS MAPS AT DISTRICT OFFICE.

2 -Exist NEMA ENCLOSURE WITH:
2P-40 A MAIN
2P-30 A LIGHTING
2P-30 A SIGN

LIGHTING AND SIGN ILLUMINATION

APPROVED FOR ELECTRICAL WORK ONLY

SCALE: 1" = 50'

E-6

STATE OF CALIFORNIA - DEPARTMENT OF TRANSPORTATION
Caltrans TRAFFIC ELECTRICAL

FUNCTIONAL SUPERVISOR: DALE WILSON
CALCULATED-DESIGNED BY: HECTOR SANTAMARIA
CHECKED BY: ENRIQUE BERNAL
REVISED BY
DATE REVISED

LAST REVISION 09-26-11
DATE PLOTTED => 09-DEC-2011
TIME PLOTTED => 15:33

Dist	COUNTY	ROUTE	POST MILES TOTAL PROJECT	SHEET No.	TOTAL SHEETS
11	SD	54, 805	1.8, 5.5/9.4	424	635

Héctor A. Santamaría 08-25-11
REGISTERED ELECTRICAL ENGINEER DATE

12-5-11
PLANS APPROVAL DATE

REGISTERED PROFESSIONAL ENGINEER HECTOR A. SANTAMARIA No. 18207 Exp. 12-31-11 ELECTRICAL STATE OF CALIFORNIA

THE STATE OF CALIFORNIA OR ITS OFFICERS OR AGENTS SHALL NOT BE RESPONSIBLE FOR THE ACCURACY OR COMPLETENESS OF SCANNED COPIES OF THIS PLAN SHEET.

N △1 C Exist 1½", 2#8 (l+g)

N △2 C Exist 1½", 2#8 (l+g), 2#8 (s)

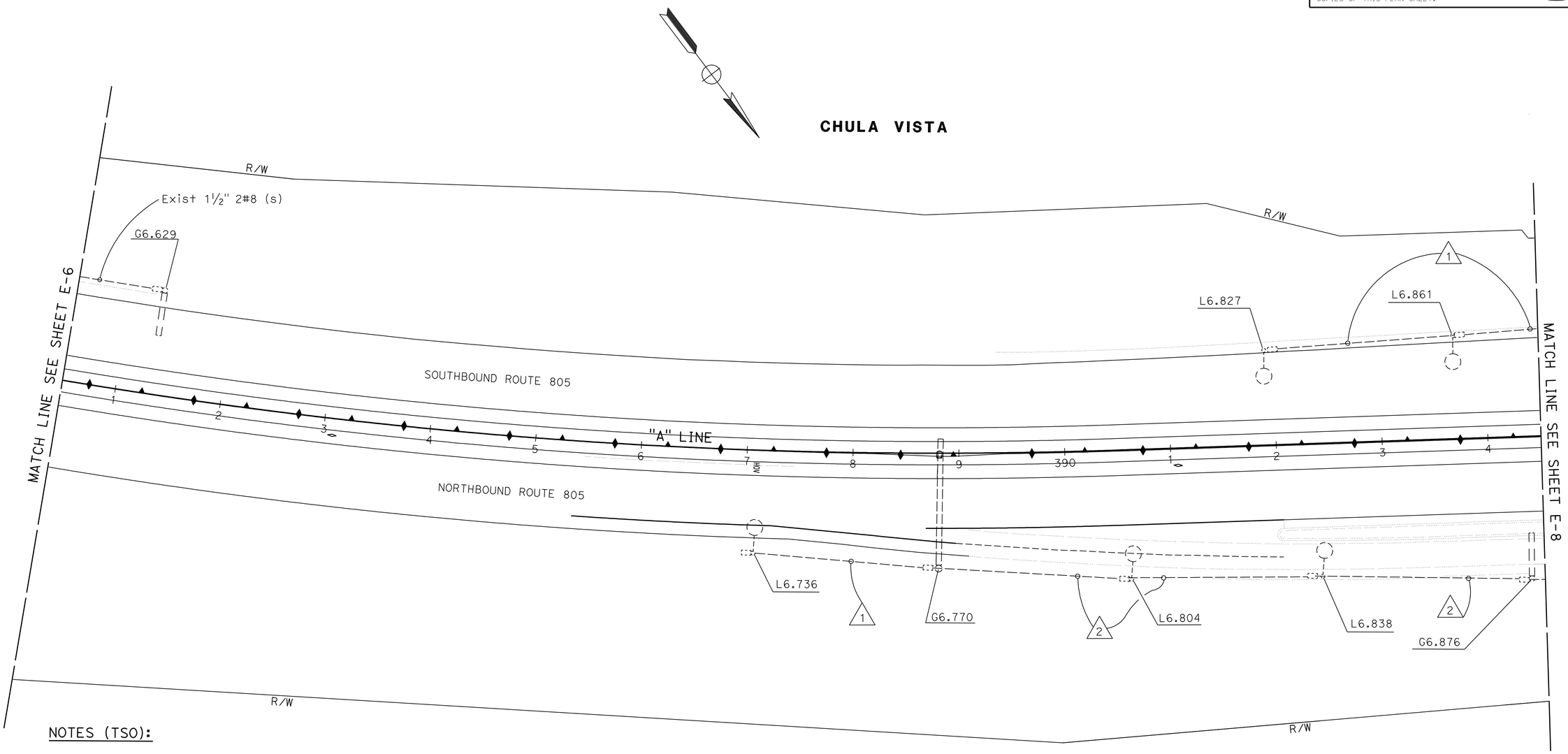

NOTES (TSO):

1 - FOR COMPLETE RIGHT OF WAY AND ACCURATE ACCESS DATA, SEE RIGHT OF WAY RECORDS MAPS AT DISTRICT OFFICE.

2 - THIS SHEET IS FOR INFORMATION ONLY.

LIGHTING AND SIGN ILLUMINATION

APPROVED FOR ELECTRICAL WORK ONLY

SCALE: 1" = 50'

E-7

STATE OF CALIFORNIA - DEPARTMENT OF TRANSPORTATION
Caltrans® **TRAFFIC ELECTRICAL**

FUNCTIONAL SUPERVISOR: DALE WILSON

CALCULATED-DESIGNED BY: ENRIQUE BERNAL
CHECKED BY:

REVISED BY: HECTOR SANTAMARIA
DATE REVISED:

LAST REVISION 09-26-11 DATE PLOTTED => 12-DEC-2011 TIME PLOTTED => 12:31

Dist	COUNTY	ROUTE	POST MILES TOTAL PROJECT	SHEET No.	TOTAL SHEETS
11	SD	54, 805	1.8, 5.5/9.4	425	635

Héctor A. Santamaría 08-25-11
REGISTERED ELECTRICAL ENGINEER DATE

12-5-11
PLANS APPROVAL DATE

REGISTERED PROFESSIONAL ENGINEER HECTOR A. SANTAMARIA No. 18207 Exp. 12-31-11 ELECTRICAL STATE OF CALIFORNIA

THE STATE OF CALIFORNIA OR ITS OFFICERS OR AGENTS SHALL NOT BE RESPONSIBLE FOR THE ACCURACY OR COMPLETENESS OF SCANNED COPIES OF THIS PLAN SHEET.

CONDUIT NOTES (TSO):

1. -2"C, 2#8(LTG-HOV), 2#8(S-HOV)
2. -3"C, CAMERA CABLE
3. -2"C, 2#8(CCTV)
4. -Exist 2"C, 2#8(ltg).
   ADD 2#8(CCTV)
5. -Exist 3"C, 2#8(ltg), 2#8(rm), 3#14(peu).
   ADD 2#8(CCTV), 2#8(LTG-HOV), 2#8(S-HOV), 4#14(PEU)
6. -Exist 3"C, 2#8(ltg), 2#8(rm), 3#14(peu), 2#14(fb), 3 dlc.
   ADD 2#8(CCTV), 2#8(LTG-HOV), 2#8(S-HOV), 4#14(PEU)
7. -Exist 2"C, 2#8(ltg), 2#8(rm), 3#14(peu).
   ADD 2#8(LTG-HOV), 2#8(S-HOV), 4#14(PEU)
8. -Exist 2"C, 2#8(ltg),
   ADD 2#8(LTG-HOV), 2#8(S-HOV), 4#14(PEU)
9. N C -Exist 2"C, 2#8(rm)
10. -2"C, 1 OCC (CCTV)
11. -2"C, 2#8(LTG)
12. -Exist 2"C, 2 occ
    ADD 1 OCC (CCTV)
13. -Exist 2"C, 2 occ
14. -Exist 1½"C, 2#8(ltg)
15. -Exist 1½"C, 2#8(ltg), 2#8(s)
16. -2"C, 2#8(LTG-HOV), 2#8(S-HOV), 4#14(PEU)
17. -Exist 2"C, 2 occ, 1 sic
    ADD 1 OCC (P07.114)
18. -Exist 2"C, 2 occ, 1 sic.
    ADD 1 OCC (P07.114),
    1 OCC (CCTV)

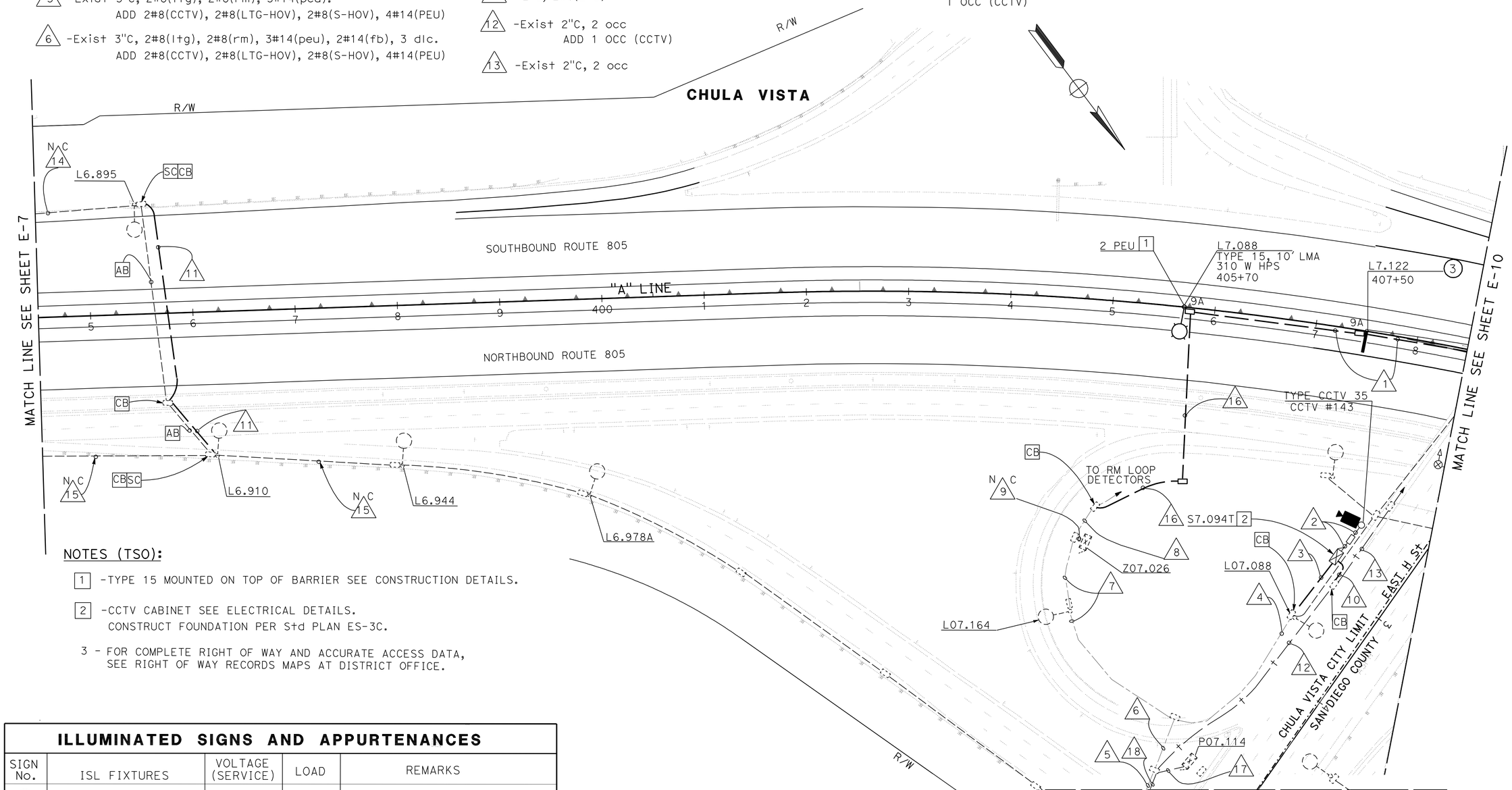

NOTES (TSO):

1. -TYPE 15 MOUNTED ON TOP OF BARRIER SEE CONSTRUCTION DETAILS.
2. -CCTV CABINET SEE ELECTRICAL DETAILS.
   CONSTRUCT FOUNDATION PER Std PLAN ES-3C.
3. - FOR COMPLETE RIGHT OF WAY AND ACCURATE ACCESS DATA, SEE RIGHT OF WAY RECORDS MAPS AT DISTRICT OFFICE.

ILLUMINATED SIGNS AND APPURTENANCES

SIGN No.	ISL FIXTURES	VOLTAGE (SERVICE)	LOAD	REMARKS
3	2	480 V	174 W	SC3A SIGN CONTROL, SEE Std PLANS ES-15C, RSP ES-15D

APPROVED FOR ELECTRICAL WORK ONLY

LIGHTING AND SIGN ILLUMINATION
CLOSED CIRCUIT TELEVISION CIRCUIT
(LOCATION 2)

SCALE: 1" = 50'

E-8

STATE OF CALIFORNIA - DEPARTMENT OF TRANSPORTATION
Caltrans® TRAFFIC ELECTRICAL

FUNCTIONAL SUPERVISOR: DALE WILSON
CALCULATED-DESIGNED BY: HECTOR SANTAMARIA
CHECKED BY: ENRIQUE BERNAL
REVISED BY / DATE REVISED

LAST REVISION 09-26-11
DATE PLOTTED => 12-DEC-2011
TIME PLOTTED => 12:31

Dist	COUNTY	ROUTE	POST MILES TOTAL PROJECT	SHEET No.	TOTAL SHEETS
11	SD	54,805	1.8,5.5/9.4	426	635

Héctor A. Santamaría 08-25-11
REGISTERED ELECTRICAL ENGINEER DATE

12-5-11
PLANS APPROVAL DATE

REGISTERED PROFESSIONAL ENGINEER HECTOR A. SANTAMARIA No. 18207 Exp. 12-31-11 ELECTRICAL STATE OF CALIFORNIA

THE STATE OF CALIFORNIA OR ITS OFFICERS OR AGENTS SHALL NOT BE RESPONSIBLE FOR THE ACCURACY OR COMPLETENESS OF SCANNED COPIES OF THIS PLAN SHEET.

NOTES (TSO):

1 - Exist 480 V, 1 PHASE, 3-WIRE TYPE III-CF SERVICE EQUIPMENT ENCLOSURE WITH THE FOLLOWING CB:

MAIN 2P-100 A MAIN
2P-30 A SPARE
2P-15 A SPARE
1P-30 A RM
2P-30 A LTG
1P-15 A PEU

USE: 2P-30 A CB SPARE AND LABEL HOV-LIGHTING
USE: 2P-30 A CB SPARE AND LABEL HOV-SIGN
ADD: 1P-30 A CB AND LABEL CCTV #143

2 - RC Exist TDC AND REPLACE IN PLACE WITH A MODIFIED TYPE G TDC. SEE ELECTRICAL DETAILS.

3 - FOR COMPLETE RIGHT OF WAY AND ACCURATE ACCESS DATA, SEE RIGHT OF WAY RECORDS MAPS AT DISTRICT OFFICE.

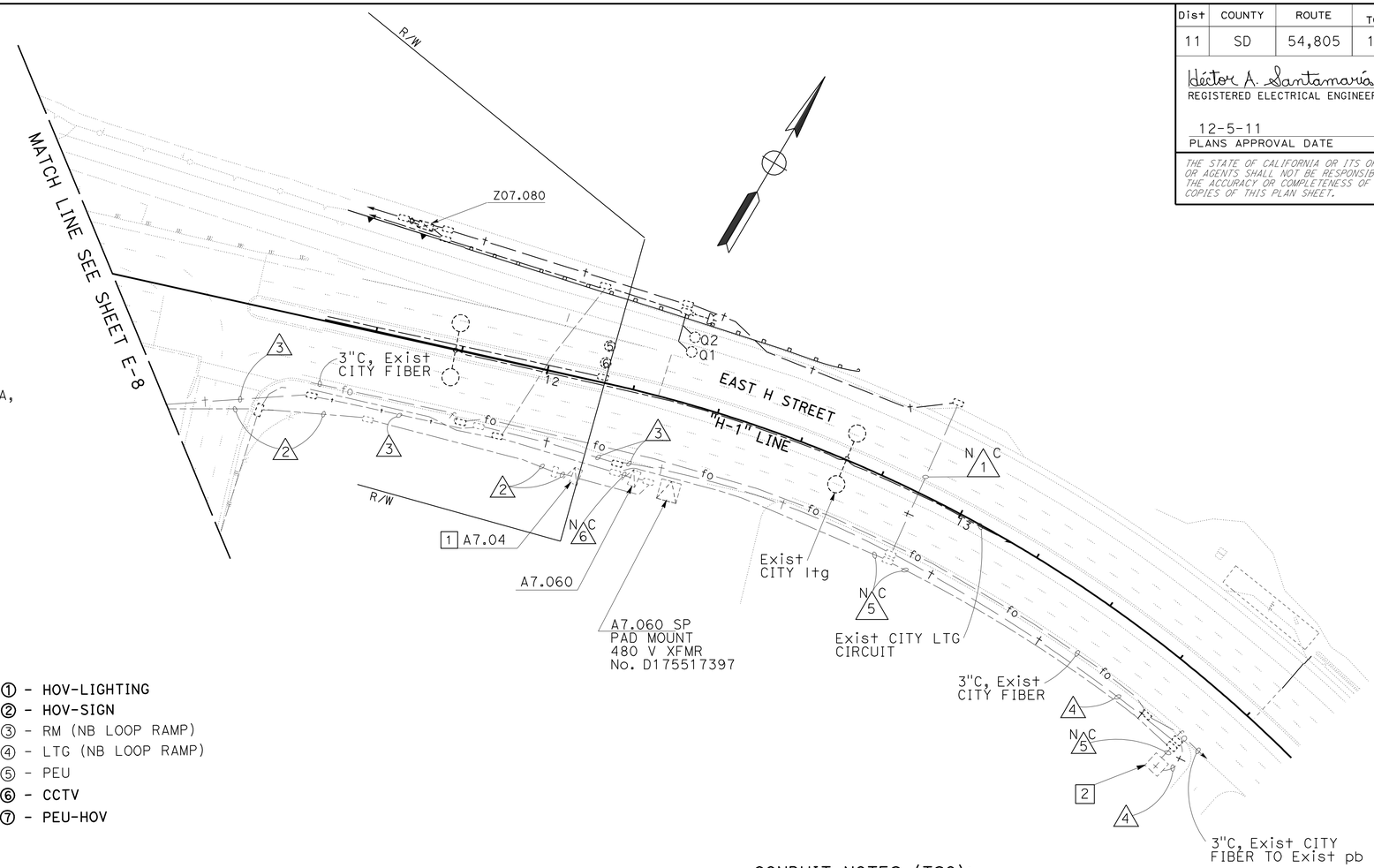

CIRCUIT BREAKERS

MAIN - 2P - 100 A
A, B - 2P - 30 A
C - 1P - 30 A
D - 1P - 15 A
E, F - 2P - 30 A
G, H - 2P - 30 A
J - 1P - 20 A

① - HOV-LIGHTING
② - HOV-SIGN
③ - RM (NB LOOP RAMP)
④ - LTG (NB LOOP RAMP)
⑤ - PEU
⑥ - CCTV
⑦ - PEU-HOV

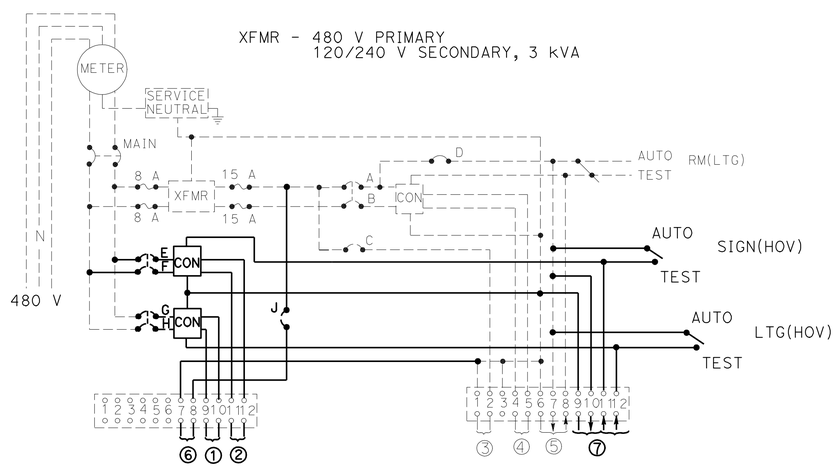

WIRING DIAGRAM "B" A7.04
Exist TYPE III-CF SERVICE EQUIPMENT ENCLOSURE
NO SCALE

CONDUIT NOTES (TSO):

N 1 C - Exist 2"C, 1 si c(rm)

2 - Exist 3"C, 2#8 (rm), 2#8 (ltg), 3#14 (peu).
ADD 2#8 (CCTV), 2#8 (LTG-HOV), 2#8 (S-HOV), 4#14 (PEU).

3 - Exist 2"C, 1 sic, 1 occ.
ADD 1 OCC (CCTV), 1 OCC (P07.114)

4 - Exist 2"C, 2 sic, 1 occ.
ADD 1 OCC (CCTV), 1 OCC (P07.114)

N 5 C - Exist 2"C, 2#14 (tdc)

N 6 C - Exist 2"C, 4#6, 2#6 (signal), 4#6 (s), 2#8 (rm), 4#14 (peu), 2#14 (tdc)

LIGHTING AND SIGN ILLUMINATION
CLOSED CIRCUIT TELEVISION SYSTEM
(LOCATION 2)

SCALE: 1" = 50'

E-9

APPROVED FOR ELECTRICAL WORK ONLY

STATE OF CALIFORNIA - DEPARTMENT OF TRANSPORTATION
Caltrans® TRAFFIC ELECTRICAL

FUNCTIONAL SUPERVISOR: DALE WILSON
CALCULATED-DESIGNED BY: HECTOR SANTAMARIA
CHECKED BY: ENRIQUE BERNAL
REVISED BY
DATE REVISED

LAST REVISION 09-26-11
DATE PLOTTED => 09-DEC-2011
TIME PLOTTED => 16:49

Dist	COUNTY	ROUTE	POST MILES TOTAL PROJECT	SHEET No.	TOTAL SHEETS
11	SD	54,805	1.8,5.5/9.4	427	635

Héctor A. Santamaría 08-25-11
REGISTERED ELECTRICAL ENGINEER DATE

12-5-11
PLANS APPROVAL DATE

REGISTERED PROFESSIONAL ENGINEER HECTOR A. SANTAMARIA No. 18207 Exp. 12-31-11 ELECTRICAL STATE OF CALIFORNIA

THE STATE OF CALIFORNIA OR ITS OFFICERS OR AGENTS SHALL NOT BE RESPONSIBLE FOR THE ACCURACY OR COMPLETENESS OF SCANNED COPIES OF THIS PLAN SHEET.

CONDUIT NOTES (TSO):

1 - 2"C, 2#8 (LTG-HOV), 2#8 (S-HOV)

N 2 C - Exist 1½"C, 2#8 (ltg)

N 3 C - Exist 1½"C, 2#8 (ltg), 2#8 (s)

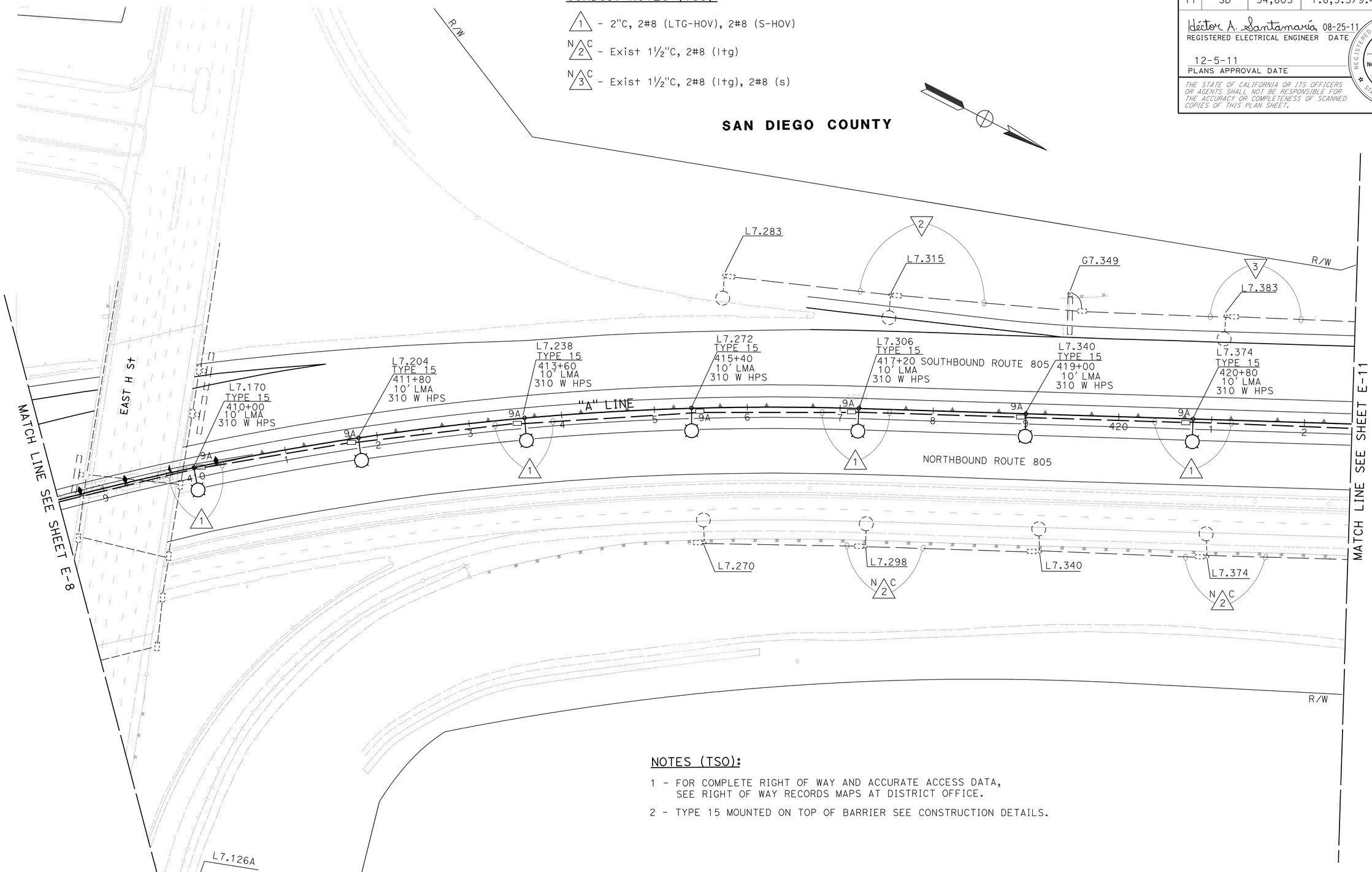

NOTES (TSO):

1 - FOR COMPLETE RIGHT OF WAY AND ACCURATE ACCESS DATA, SEE RIGHT OF WAY RECORDS MAPS AT DISTRICT OFFICE.

2 - TYPE 15 MOUNTED ON TOP OF BARRIER SEE CONSTRUCTION DETAILS.

LIGHTING AND SIGN ILLUMINATION

SCALE: 1" = 50'

APPROVED FOR ELECTRICAL WORK ONLY

E-10

STATE OF CALIFORNIA - DEPARTMENT OF TRANSPORTATION
Caltrans® TRAFFIC ELECTRICAL

FUNCTIONAL SUPERVISOR: DALE WILSON
CALCULATED-DESIGNED BY: HECTOR SANTAMARIA
CHECKED BY: ENRIQUE BERNAL
REVISED BY
DATE REVISED

LAST REVISION 09-26-11
DATE PLOTTED => 12-DEC-2011
TIME PLOTTED => 12:32

Dist	COUNTY	ROUTE	POST MILES TOTAL PROJECT	SHEET No.	TOTAL SHEETS
11	SD	54,805	1.8,5.5/9.4	428	635

Héctor A. Santamaría 08-25-11
REGISTERED ELECTRICAL ENGINEER DATE

12-5-11
PLANS APPROVAL DATE

REGISTERED PROFESSIONAL ENGINEER HECTOR A. SANTAMARIA No. 18207 Exp. 12-31-11 ELECTRICAL STATE OF CALIFORNIA

THE STATE OF CALIFORNIA OR ITS OFFICERS OR AGENTS SHALL NOT BE RESPONSIBLE FOR THE ACCURACY OR COMPLETENESS OF SCANNED COPIES OF THIS PLAN SHEET.

NOTES (TSO):

1 - FOR COMPLETE RIGHT OF WAY AND ACCURATE ACCESS DATA, SEE RIGHT OF WAY RECORDS MAPS AT DISTRICT OFFICE.

2 - TO SD ON LYNDOLE Ln

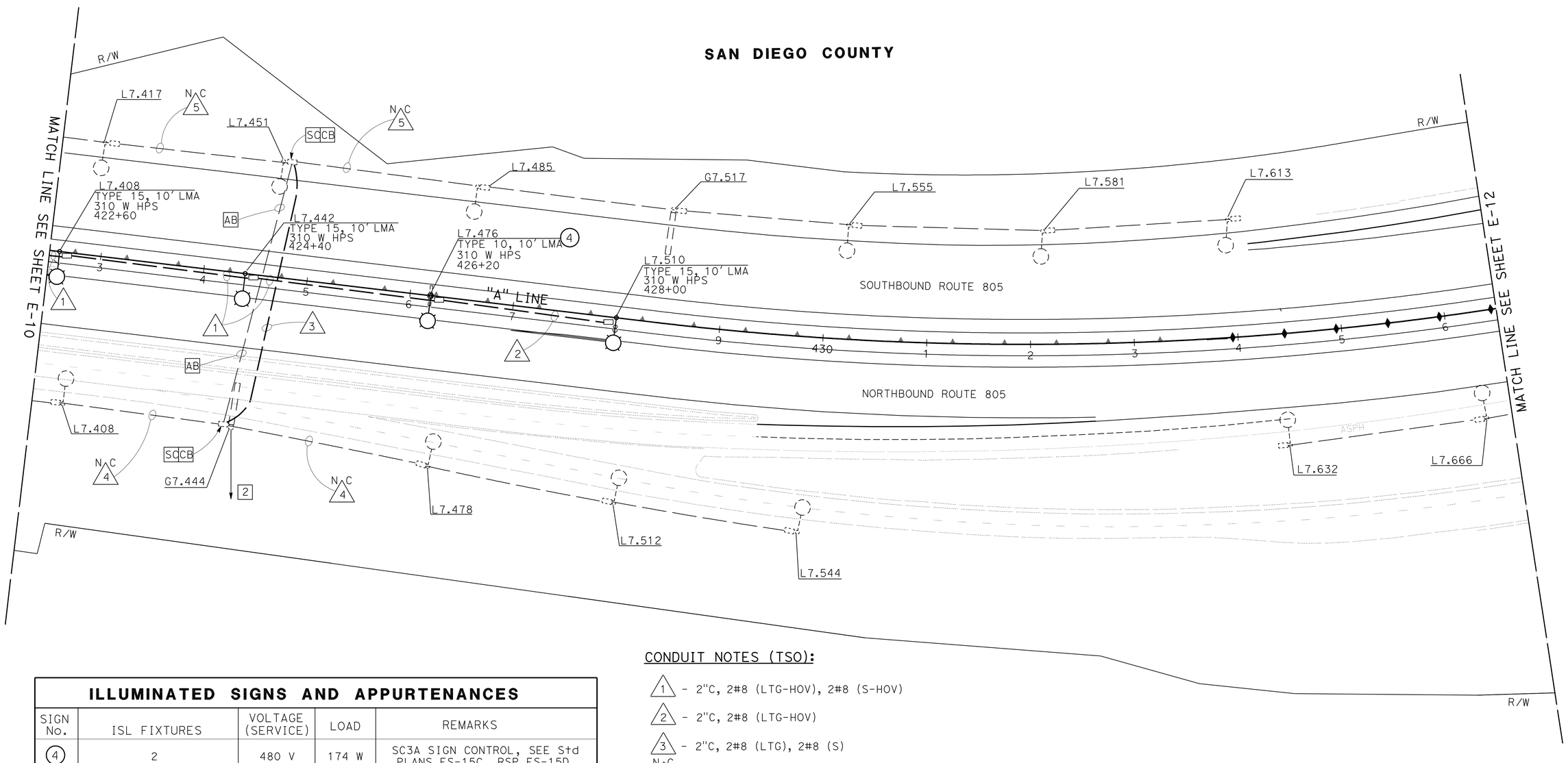

ILLUMINATED SIGNS AND APPURTENANCES				
SIGN No.	ISL FIXTURES	VOLTAGE (SERVICE)	LOAD	REMARKS
4	2	480 V	174 W	SC3A SIGN CONTROL, SEE Std PLANS ES-15C, RSP ES-15D

CONDUIT NOTES (TSO):

1 - 2"C, 2#8 (LTG-HOV), 2#8 (S-HOV)

2 - 2"C, 2#8 (LTG-HOV)

3 - 2"C, 2#8 (LTG), 2#8 (S)

N C 4 - Exist 1½"C, 2#8 (ltg)

N C 5 - Exist 1½"C, 2#8 (ltg), 2#8 (s)

LIGHTING AND SIGN ILLUMINATION

SCALE: 1" = 50'

E-11

APPROVED FOR ELECTRICAL WORK ONLY

STATE OF CALIFORNIA - DEPARTMENT OF TRANSPORTATION
Caltrans
TRAFFIC ELECTRICAL

FUNCTIONAL SUPERVISOR: DALE WILSON
CALCULATED-DESIGNED BY: ENRIQUE BERNAL
CHECKED BY: HECTOR SANTAMARIA
REVISED BY
DATE REVISED

LAST REVISION 09-26-11
DATE PLOTTED => 09-DEC-2011
TIME PLOTTED => 16:50

Dist	COUNTY	ROUTE	POST MILES TOTAL PROJECT	SHEET No.	TOTAL SHEETS
11	SD	54,805	1.8,5.5/9.4	429	635

Héctor A. Santamaría 08-25-11
REGISTERED ELECTRICAL ENGINEER DATE

12-5-11
PLANS APPROVAL DATE

REGISTERED PROFESSIONAL ENGINEER HECTOR A. SANTAMARIA No. 18207 Exp. 12-31-11 ELECTRICAL STATE OF CALIFORNIA

THE STATE OF CALIFORNIA OR ITS OFFICERS OR AGENTS SHALL NOT BE RESPONSIBLE FOR THE ACCURACY OR COMPLETENESS OF SCANNED COPIES OF THIS PLAN SHEET.

CONDUIT NOTES (TSO):

1 - Exist 1½"C, 2#6 (ltg), 2#8 (s).
RC ALL CONDUCTORS
ADD 2#6 (LTG), 2#8 (S)

2 - Exist 2"C, 2#8 (soffit).
ADD 2#6 (LTG), 2#8 (S)

3 - Exist 1½"C, 2#6 (ltg), 2#8 (s).
RC ALL CONDUCTORS
AB CONDUIT

N C 4 -Exist 1½"C, 2#8 (soffit)

N C 5 -Exist 1½"C, 2#6 (ltg), 2#8 (s)

6 -2"C, 2#6 (LTG)

N C 7 - Exist 1½"C, 2#8 (ltg)

NOTE (TSO):

1 - FOR COMPLETE RIGHT OF WAY AND ACCURATE ACCESS DATA, SEE RIGHT OF WAY RECORDS MAPS AT DISTRICT OFFICE.

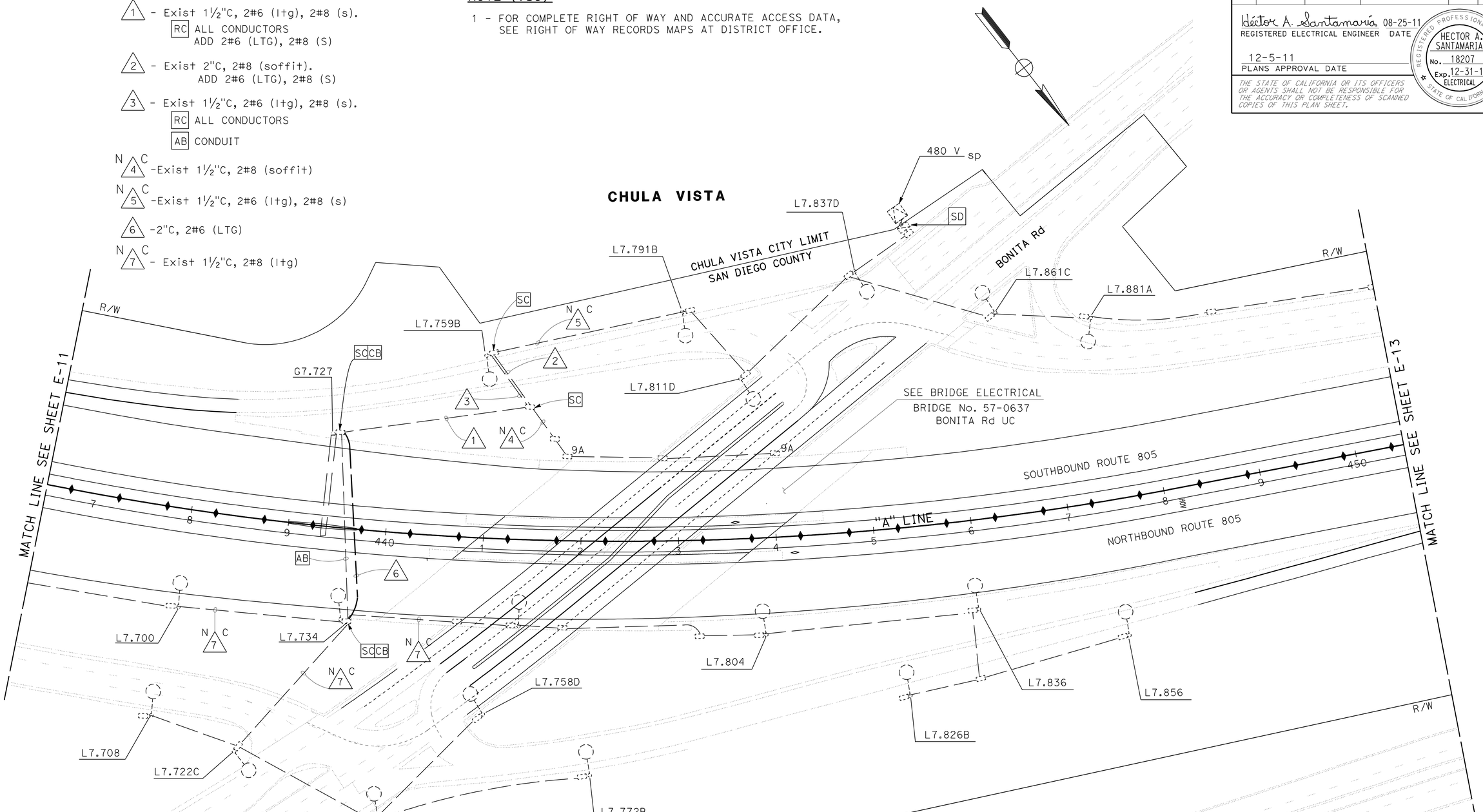

LIGHTING AND SIGN ILLUMINATION

SCALE: 1" = 50'

APPROVED FOR ELECTRICAL WORK ONLY

E-12

STATE OF CALIFORNIA - DEPARTMENT OF TRANSPORTATION
Caltrans® **TRAFFIC ELECTRICAL**

FUNCTIONAL SUPERVISOR: DALE WILSON
CALCULATED-DESIGNED BY: HECTOR SANTAMARIA
CHECKED BY: ENRIQUE BERNAL
REVISED BY
DATE REVISED

LAST REVISION 09-26-11
DATE PLOTTED => 09-DEC-2011
TIME PLOTTED => 16:50

Dist	COUNTY	ROUTE	POST MILES TOTAL PROJECT	SHEET No.	TOTAL SHEETS
11	SD	54,805	1.8,5.5/9.4	430	635

Héctor A. Santamaría 08-25-11
REGISTERED ELECTRICAL ENGINEER DATE

12-5-11
PLANS APPROVAL DATE

REGISTERED PROFESSIONAL ENGINEER
HECTOR A. SANTAMARIA
No. 18207
Exp. 12-31-11
ELECTRICAL
STATE OF CALIFORNIA

THE STATE OF CALIFORNIA OR ITS OFFICERS OR AGENTS SHALL NOT BE RESPONSIBLE FOR THE ACCURACY OR COMPLETENESS OF SCANNED COPIES OF THIS PLAN SHEET.

CHULA VISTA

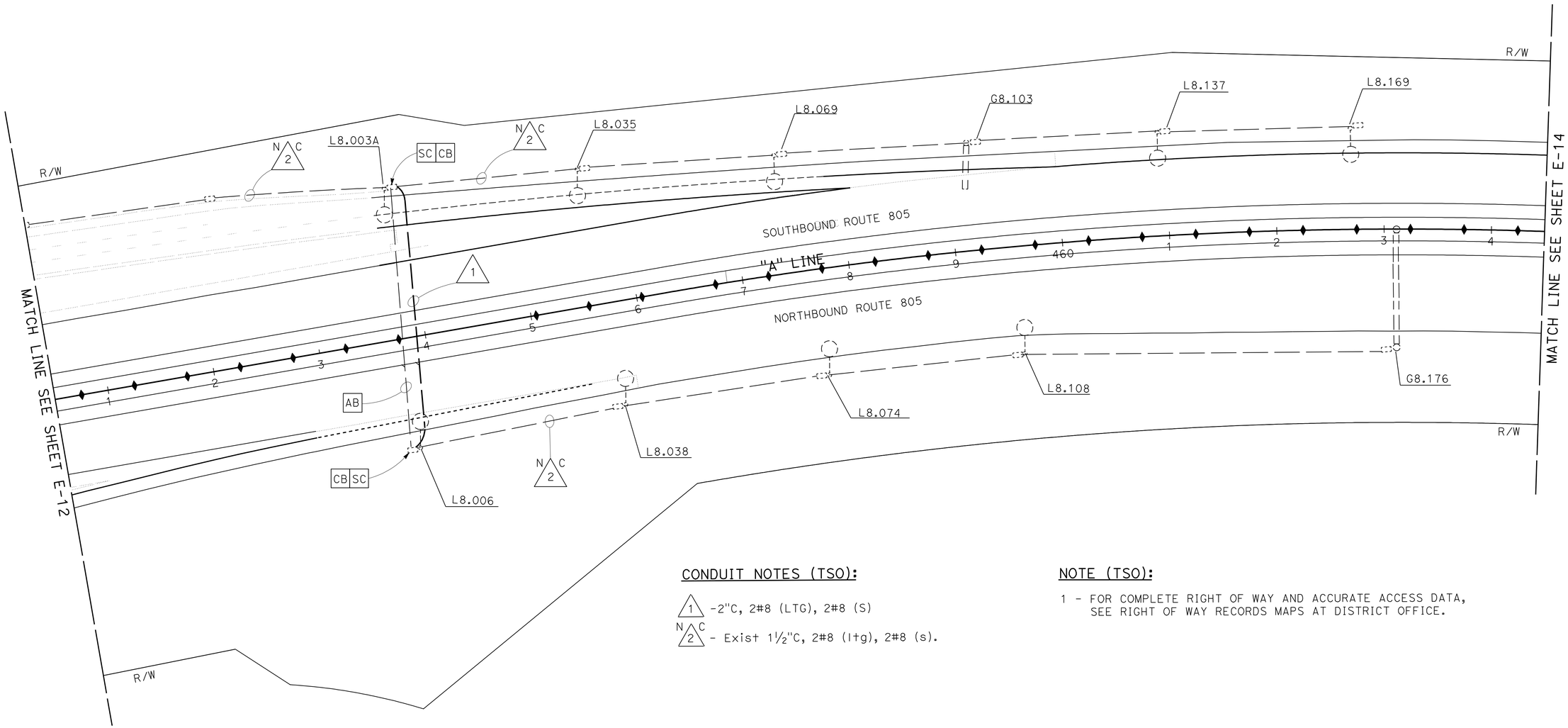

CONDUIT NOTES (TSO):

1 -2"C, 2#8 (LTG), 2#8 (S)

N C 2 - Exist 1½"C, 2#8 (ltg), 2#8 (s).

NOTE (TSO):

1 - FOR COMPLETE RIGHT OF WAY AND ACCURATE ACCESS DATA, SEE RIGHT OF WAY RECORDS MAPS AT DISTRICT OFFICE.

LIGHTING AND SIGN ILLUMINATION

SCALE: 1" = 50'

E-13

APPROVED FOR ELECTRICAL WORK ONLY

STATE OF CALIFORNIA - DEPARTMENT OF TRANSPORTATION
Caltrans
TRAFFIC ELECTRICAL

FUNCTIONAL SUPERVISOR: DALE WILSON
CALCULATED-DESIGNED BY: HECTOR SANTAMARIA
CHECKED BY: ENRIQUE BERNAL
REVISED BY
DATE REVISED

LAST REVISION 09-26-11
DATE PLOTTED => 12-DEC-2011
TIME PLOTTED => 12:32

Dist	COUNTY	ROUTE	POST MILES TOTAL PROJECT	SHEET No.	TOTAL SHEETS
11	SD	54,805	1.8,5.5/9.4	431	635

Héctor A. Santamaría 08-25-11
REGISTERED ELECTRICAL ENGINEER DATE

12-5-11
PLANS APPROVAL DATE

REGISTERED PROFESSIONAL ENGINEER HECTOR A. SANTAMARIA No. 18207 Exp. 12-31-11 ELECTRICAL STATE OF CALIFORNIA

THE STATE OF CALIFORNIA OR ITS OFFICERS OR AGENTS SHALL NOT BE RESPONSIBLE FOR THE ACCURACY OR COMPLETENESS OF SCANNED COPIES OF THIS PLAN SHEET.

CONDUIT NOTES (TSO):

1 - 2"C, 2#6 (LGT-CKT 2), 2#8 (LTG-CKT 1), 2#8 (S)

2 - Exist 2"C, 4#8 (lgt), 2#6 (rm), 2#8 (s), 5#14 (peu).
ADD 2#8 (CCTV).

3 - Exist 1"C, 1 sic (rm).
ADD 1 OCC (CCTV).

N C 4 - Exist 1"C, 2#14 (ICC)

N C 5 - Exist ¾"C, 2#12 (tdc)

6 - Exist 2"C, 2#8 (ltg), 2#6 (rm).
ADD 2#8 (CCTV).

N C 7 - Exist 1½"C, 2#6 (ltg-ckt 2), 2#8 (ltg-ckt 1), 2#8 (s)

N C 8 - Exist 1½"C, 2#8 (ltg-ckt 1), 2#8 (s)

9 - Exist 1½"C, 4#8 (ltg), 2#6 (rm), 2#8 (s), 5#14 (peu), 2#14 (icc),
ADD 2#8 (CCTV).

N C 10 - Exist 1½"C, 2#8 (s), 2#8 (ltg-ckt 2)

NOTES (TSO):

1 - Exist TYPE III-CF SEE WIREING DIAGRAM "C" ON THIS SHEET.

2 - USE Exist 1P-15 A (SPARE) AND LABEL "CCTV #144".

3 - FOR CONTINUATION SEE RAMP METERING SYSTEM (LOCATION 5) ON SHEET E-34.

4 - FOR COMPLETE RIGHT OF WAY AND ACCURATE ACCESS DATA, SEE RIGHT OF WAY RECORDS MAPS AT DISTRICT OFFICE.

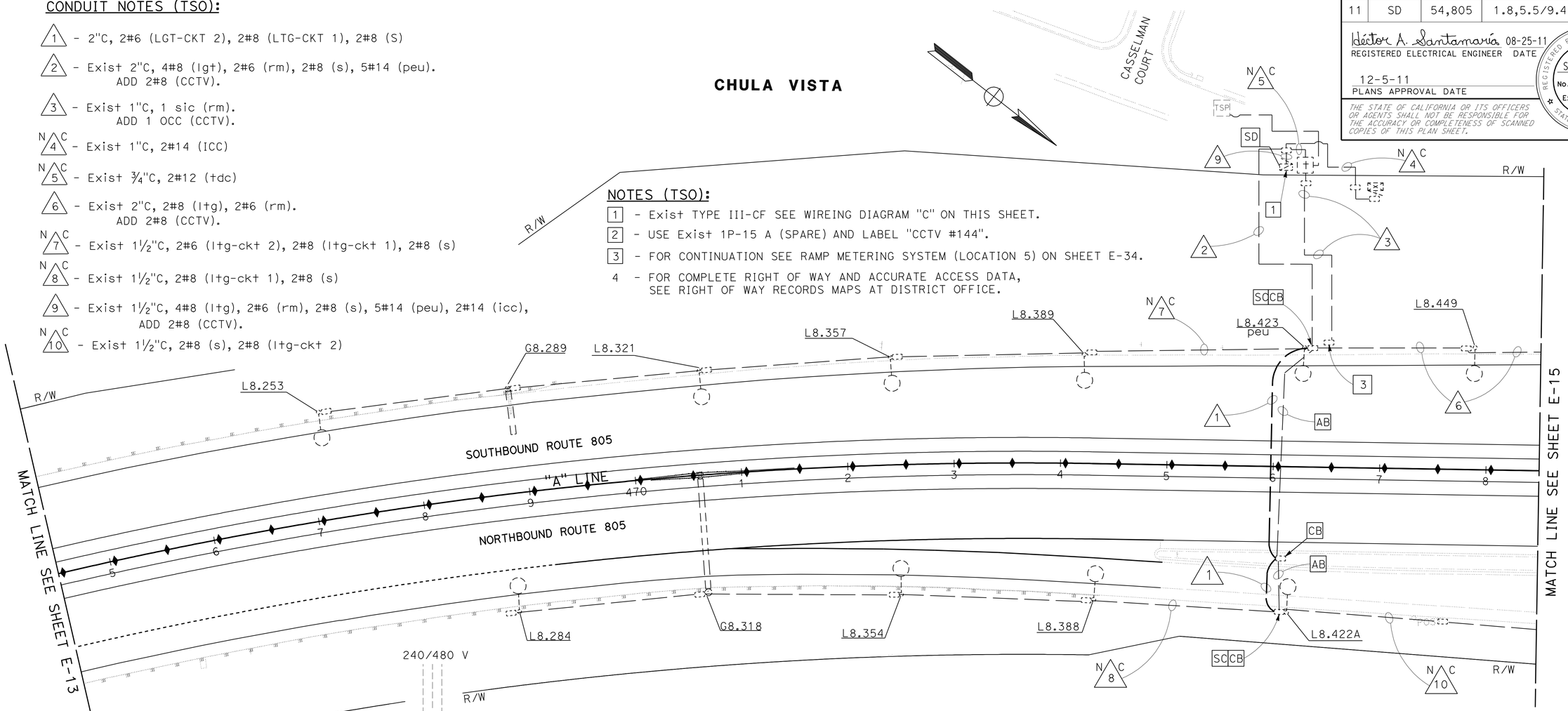

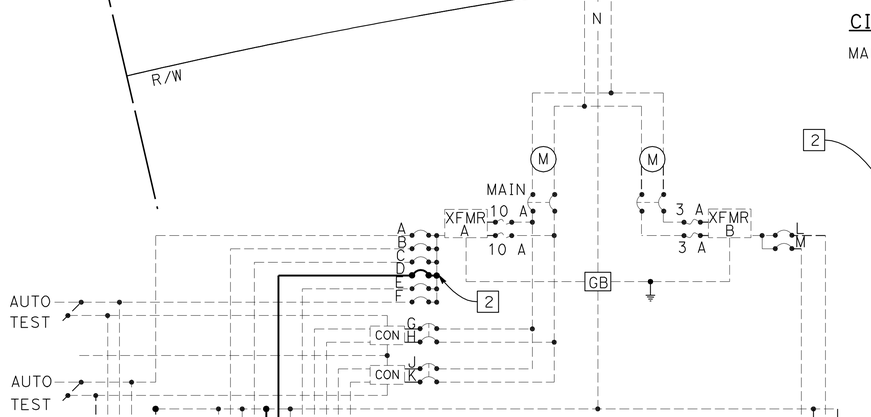

CIRCUIT BREAKERS

MAIN - 2P - 100 A
A - 1P - 15 A
B - 1P - 30 A
C - 1P - 15 A
D - 1P - 15 A (SPARE)
E - 1P - 15 A (SPARE)
F - 1P - 15 A
G, H - 2P - 30 A
J, K - 2P - 30 A
L - 1P - 15 A
M - 1P - 15 A SPARE

XFMR A = 480/120 V, 3 kVA TRANSFORMER
XFMR B = 480/120 V, 1 kVA TRANSFORMER

① - PEU
② - RAMP METER
③ - TDC
CCTV#144 ④ - ~~SPARE~~
⑤ - SPARE
⑥ - LIGHTING
⑦ - SIGN
⑧ - IRRIGATION CONTROLLER

WIRING DIAGRAM "C" A8.45

Exist TYPE III-CF SERVICE EQUIPMENT ENCLOSURE
HILLTOP DRIVE

CLOSED CIRCUIT TELEVETION SYSTEM (LOCATION 3)

LIGHTING AND SIGN ILLUMINATION

SCALE: 1" = 50'

E-14

APPROVED FOR ELECTRICAL WORK ONLY

STATE OF CALIFORNIA - DEPARTMENT OF TRANSPORTATION
Caltrans TRAFFIC ELECTRICAL

FUNCTIONAL SUPERVISOR: DALE WILSON
CALCULATED-DESIGNED BY: HECTOR SANTAMARIA
CHECKED BY: ENRIQUE BERNAL
REVISED BY / DATE REVISED

LAST REVISION DATE PLOTTED => 09-DEC-2011
09-26-11 TIME PLOTTED => 16:50

Dist	COUNTY	ROUTE	POST MILES TOTAL PROJECT	SHEET No.	TOTAL SHEETS
11	SD	54,805	1.8,5.5/9.4	432	635

Héctor A. Santamaría 08-25-11
REGISTERED ELECTRICAL ENGINEER DATE

12-5-11
PLANS APPROVAL DATE

REGISTERED PROFESSIONAL ENGINEER
HECTOR A. SANTAMARIA
No. 18207
Exp. 12-31-11
ELECTRICAL
STATE OF CALIFORNIA

THE STATE OF CALIFORNIA OR ITS OFFICERS OR AGENTS SHALL NOT BE RESPONSIBLE FOR THE ACCURACY OR COMPLETENESS OF SCANNED COPIES OF THIS PLAN SHEET.

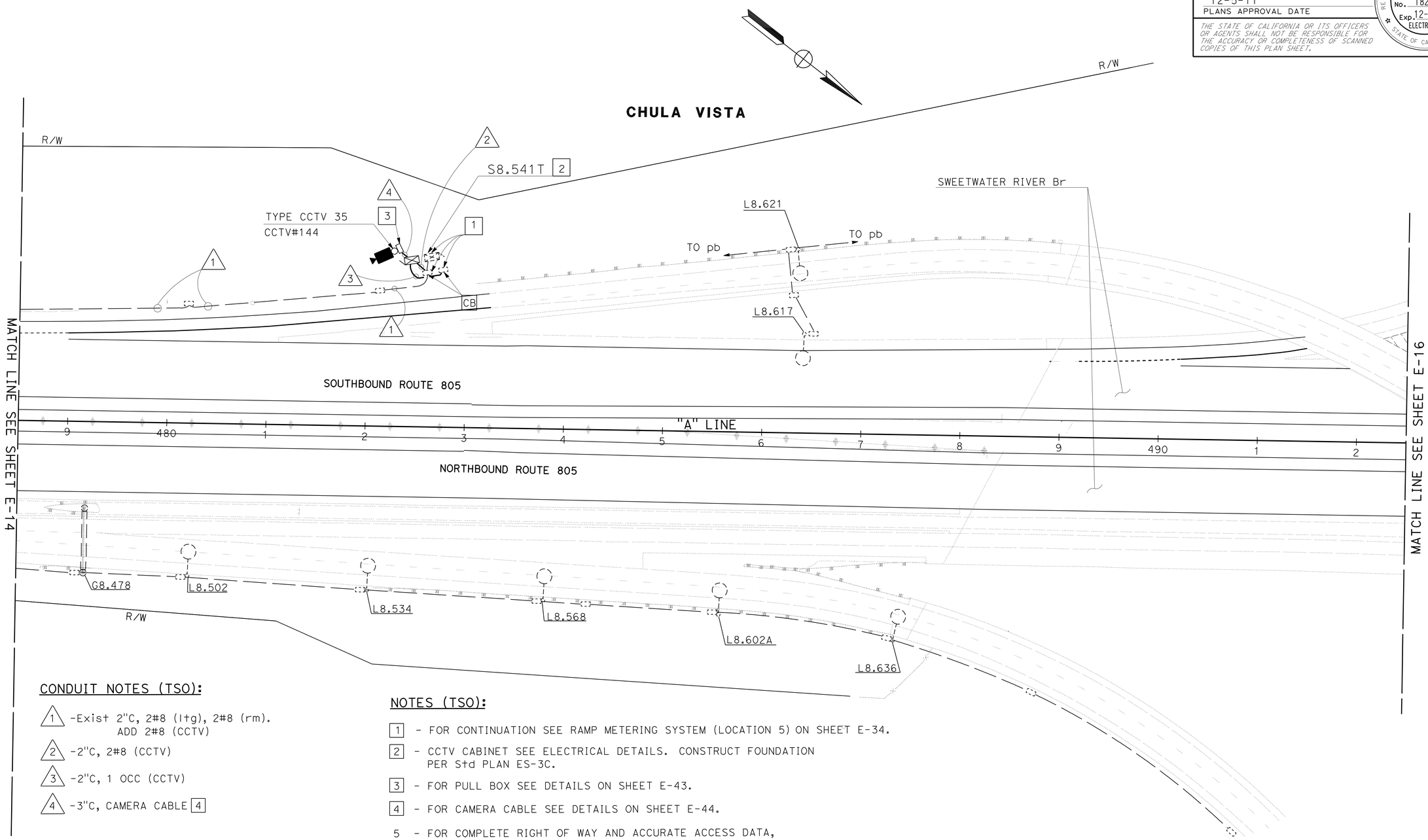

CONDUIT NOTES (TSO):

1. -Exist 2"C, 2#8 (l+g), 2#8 (rm). ADD 2#8 (CCTV)
2. -2"C, 2#8 (CCTV)
3. -2"C, 1 OCC (CCTV)
4. -3"C, CAMERA CABLE [4]

NOTES (TSO):

[1] - FOR CONTINUATION SEE RAMP METERING SYSTEM (LOCATION 5) ON SHEET E-34.

[2] - CCTV CABINET SEE ELECTRICAL DETAILS. CONSTRUCT FOUNDATION PER Std PLAN ES-3C.

[3] - FOR PULL BOX SEE DETAILS ON SHEET E-43.

[4] - FOR CAMERA CABLE SEE DETAILS ON SHEET E-44.

5 - FOR COMPLETE RIGHT OF WAY AND ACCURATE ACCESS DATA, SEE RIGHT OF WAY RECORDS MAPS AT DISTRICT OFFICE.

LIGHTING AND SIGN ILLUMINATION
CLOSED CIRCUIT TELEVISION SYSTEM
(LOCATION 3)

SCALE: 1" = 50'

E-15

APPROVED FOR ELECTRICAL WORK ONLY

STATE OF CALIFORNIA - DEPARTMENT OF TRANSPORTATION
Caltrans® TRAFFIC ELECTRICAL

FUNCTIONAL SUPERVISOR: DALE WILSON
CALCULATED-DESIGNED BY: HECTOR SANTAMARIA
CHECKED BY: ENRIQUE BERNAL
REVISED BY
DATE REVISED

LAST REVISION 09-26-11
DATE PLOTTED => 09-DEC-2011
TIME PLOTTED => 16:50

Dist	COUNTY	ROUTE	POST MILES TOTAL PROJECT	SHEET No.	TOTAL SHEETS
11	SD	54,805	1.8,5.5/9.4	433	635

Héctor A. Santamaría 08-25-11
REGISTERED ELECTRICAL ENGINEER DATE

12-5-11
PLANS APPROVAL DATE

REGISTERED PROFESSIONAL ENGINEER HECTOR A. SANTAMARIA No. 18207 Exp. 12-31-11 ELECTRICAL STATE OF CALIFORNIA

THE STATE OF CALIFORNIA OR ITS OFFICERS OR AGENTS SHALL NOT BE RESPONSIBLE FOR THE ACCURACY OR COMPLETENESS OF SCANNED COPIES OF THIS PLAN SHEET.

CONDUIT NOTES (TSO):

1 - 2"C, 2#8 (LTG-HOV), 2#8 (S-HOV)

2 - 2"C, 2#8 (LTG-HOV)

3 - 3"C, CAMERA CABLE [5]

N C 4 - Exist 1½"C, 2#8 (ltg)

N C 5 - Exist 1½"C, 2#8 (ltg), 2#8 (s)

6 - 2"C, 1 OCC (CCTV)

7 - 2"C, 2#8 (CCTV)

8 - 2"C, 2#8 (CCTV),
2#8 (LTG-HOV),
2#8 (S-HOV)

9 - 2"C, 2#8 (S)

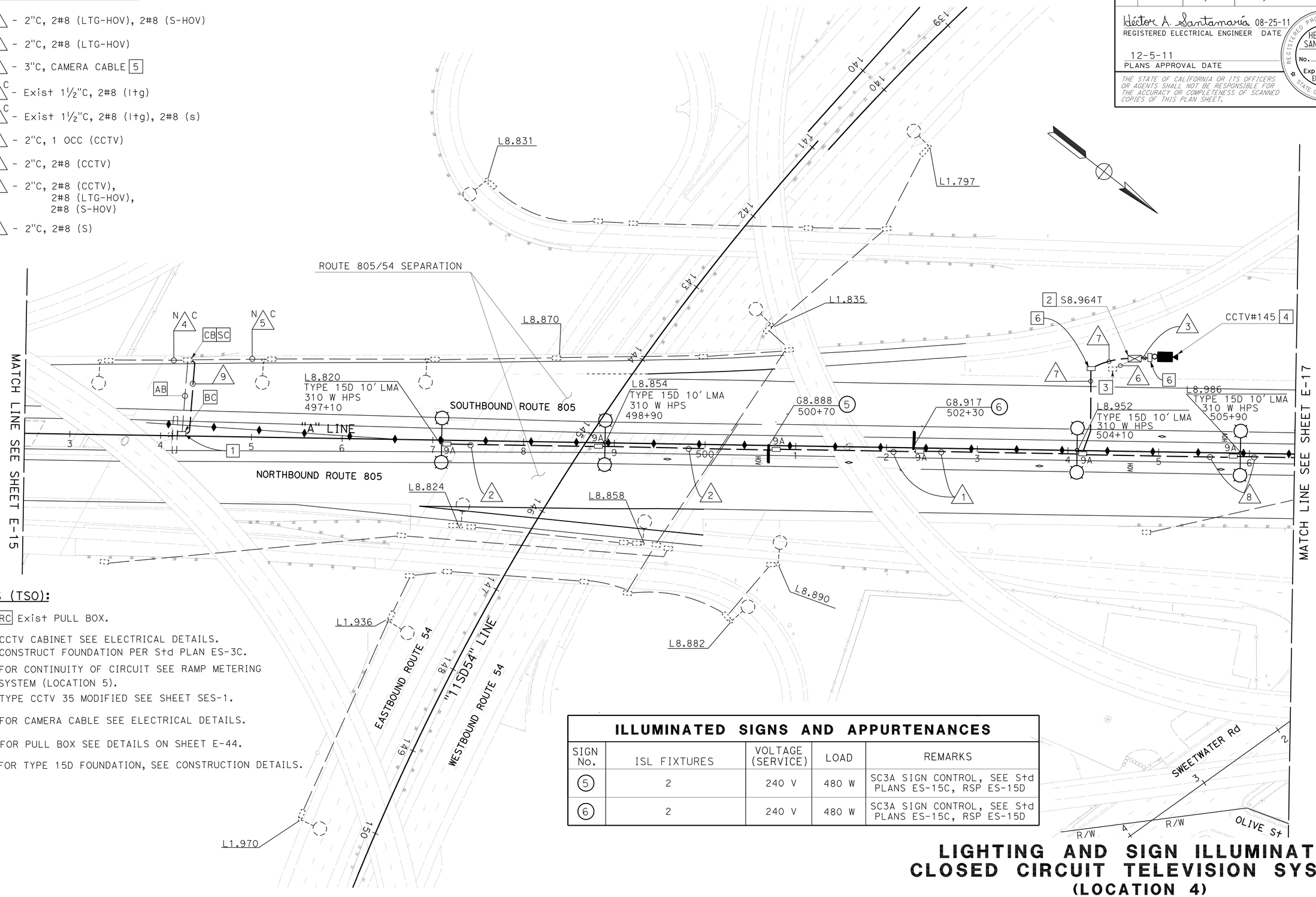

NOTES (TSO):

1 - RC Exist PULL BOX.

2 - CCTV CABINET SEE ELECTRICAL DETAILS. CONSTRUCT FOUNDATION PER Std PLAN ES-3C.

3 - FOR CONTINUITY OF CIRCUIT SEE RAMP METERING SYSTEM (LOCATION 5).

4 - TYPE CCTV 35 MODIFIED SEE SHEET SES-1.

5 - FOR CAMERA CABLE SEE ELECTRICAL DETAILS.

6 - FOR PULL BOX SEE DETAILS ON SHEET E-44.

7 - FOR TYPE 15D FOUNDATION, SEE CONSTRUCTION DETAILS.

ILLUMINATED SIGNS AND APPURTENANCES

SIGN No.	ISL FIXTURES	VOLTAGE (SERVICE)	LOAD	REMARKS
5	2	240 V	480 W	SC3A SIGN CONTROL, SEE Std PLANS ES-15C, RSP ES-15D
6	2	240 V	480 W	SC3A SIGN CONTROL, SEE Std PLANS ES-15C, RSP ES-15D

LIGHTING AND SIGN ILLUMINATION
CLOSED CIRCUIT TELEVISION SYSTEM
(LOCATION 4)

SCALE: 1" = 50'

E-16

APPROVED FOR ELECTRICAL WORK ONLY

STATE OF CALIFORNIA - DEPARTMENT OF TRANSPORTATION
Caltrans® TRAFFIC ELECTRICAL

FUNCTIONAL SUPERVISOR: DALE WILSON
CALCULATED-DESIGNED BY: ENRIQUE BERNAL
CHECKED BY: HECTOR SANTAMARIA
REVISED BY / DATE REVISED

LAST REVISION 09-26-11
DATE PLOTTED => 12-DEC-2011
TIME PLOTTED => 12:32

Dist	COUNTY	ROUTE	POST MILES TOTAL PROJECT	SHEET No.	TOTAL SHEETS
11	SD	54,805	1.8,5.5/9.4	434	635

Héctor A. Santamaría 08-25-11
REGISTERED ELECTRICAL ENGINEER DATE

12-5-11
PLANS APPROVAL DATE

REGISTERED PROFESSIONAL ENGINEER HECTOR A. SANTAMARIA No. 18207 Exp. 12-31-11 ELECTRICAL STATE OF CALIFORNIA

THE STATE OF CALIFORNIA OR ITS OFFICERS OR AGENTS SHALL NOT BE RESPONSIBLE FOR THE ACCURACY OR COMPLETENESS OF SCANNED COPIES OF THIS PLAN SHEET.

CONDUIT NOTES (TSO):

1. 3"C, 4#8 (LTG), 4#8 (S), 2#10 (ICC), 2#8 (CCTV), 2#8 (LTG-HOV), 2#8 (S-HOV), 4#14 (PEU).
2. 2"C, MT. (CONDUCTORS BY SDG&E)
3. N C Exist 1½"C, 2#8 (ltg), 2#8 (s)
4. 3"C, 2#8 (LTG-HOV), 2#8 (S-HOV), 2#8 (LTG), 2#8 (S), 2#10 (ICC), 2#8 (CCTV)
5. 2"C, 2#8 (LTG-HOV), 2#8 (S-HOV)
6. 2"C, 2#8 (S-HOV)
7. 2"C, 2#8 (LTG), 2#8 (S)

NOTE (TSO):

1 - FOR COMPLETE RIGHT OF WAY AND ACCURATE ACCESS DATA, SEE RIGHT OF WAY RECORDS MAPS AT DISTRICT OFFICE.

2 - INSTALL TYPE H RISER PER SDG&E REQUIREMENTS.

3 - SEE WIRING DIAGRAM "D" ON SHEET E-19.

4 - RC TYPE A SERVICE.

5 - 2 peu AND POLE TO REMAIN. RC NEMA ENCLOSURE.

6 - CONNECT 2#10 TO ICC. CABINET INSTALLED PER LANDSCAPE PLANS.

7 - INSTALL 2#10 CONDUCTORS FOR ICC CABINET. CONDUIT INSTALLED PER LANDSCAPE PLANS.

8 - FOR PULL BOX SEE DETAILS ON SHEET E-43.

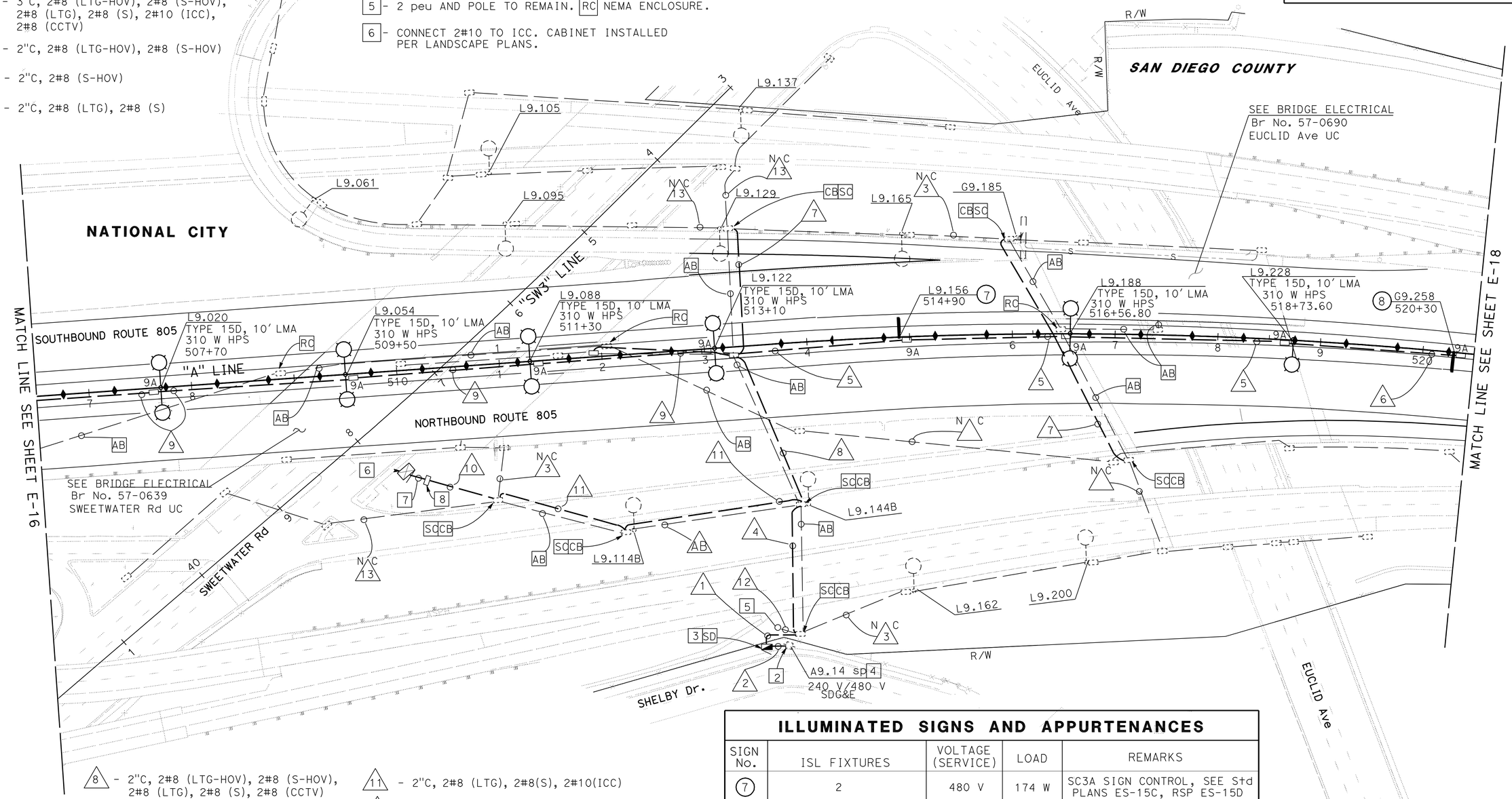

8 - 2"C, 2#8 (LTG-HOV), 2#8 (S-HOV), 2#8 (LTG), 2#8 (S), 2#8 (CCTV)

9 - 2"C, 2#8 (LTG-HOV), 2#8 (S-HOV), 2#8 (CCTV)

10 - 2"C, 2#10 (ICC)

11 - 2"C, 2#8 (LTG), 2#8(S), 2#10(ICC)

12 - Exist 1½"C, RC ALL CONDUCTORS. ADD 4#14 (PEU)

13 - N C Exist 1½"C, 2#8 (ltg)

ILLUMINATED SIGNS AND APPURTENANCES

SIGN No.	ISL FIXTURES	VOLTAGE (SERVICE)	LOAD	REMARKS
7	2	480 V	174 W	SC3A SIGN CONTROL, SEE Std PLANS ES-15C, RSP ES-15D
8	2	480 V	174 W	SC3A SIGN CONTROL, SEE Std PLANS ES-15C, RSP ES-15D

LIGHTING AND SIGN ILLUMINATION

SCALE: 1" = 50'

APPROVED FOR ELECTRICAL WORK ONLY

E-17

STATE OF CALIFORNIA - DEPARTMENT OF TRANSPORTATION
Caltrans® TRAFFIC ELECTRICAL

FUNCTIONAL SUPERVISOR: DALE WILSON
CALCULATED-DESIGNED BY: HECTOR SANTAMARIA
CHECKED BY: ENRIQUE BERNAL
REVISED BY / DATE REVISED

LAST REVISION 09-26-11
DATE PLOTTED => 12-DEC-2011
TIME PLOTTED => 12:32

Dist	COUNTY	ROUTE	POST MILES TOTAL PROJECT	SHEET No.	TOTAL SHEETS
11	SD	54,805	1.8,5.5/9.4	435	635

Héctor A. Santamaría 08-25-11
REGISTERED ELECTRICAL ENGINEER DATE

12-5-11
PLANS APPROVAL DATE

REGISTERED PROFESSIONAL ENGINEER HECTOR A. SANTAMARIA No. 18207 Exp. 12-31-11 ELECTRICAL STATE OF CALIFORNIA

THE STATE OF CALIFORNIA OR ITS OFFICERS OR AGENTS SHALL NOT BE RESPONSIBLE FOR THE ACCURACY OR COMPLETENESS OF SCANNED COPIES OF THIS PLAN SHEET.

CONDUIT NOTES (TSO):

N.C 1 -Exist 1½"C, 2#8(I+g), 2#8(s)

2 -2"C, 2#8(LTG)

3 -2"C, 2#8(LTG), 2#8(S)

N.C 4 -Exist 1½"C, 2#8(I+g)

NOTE (TSO):

1 - FOR COMPLETE RIGHT OF WAY AND ACCURATE ACCESS DATA, SEE RIGHT OF WAY RECORDS MAPS AT DISTRICT OFFICE.

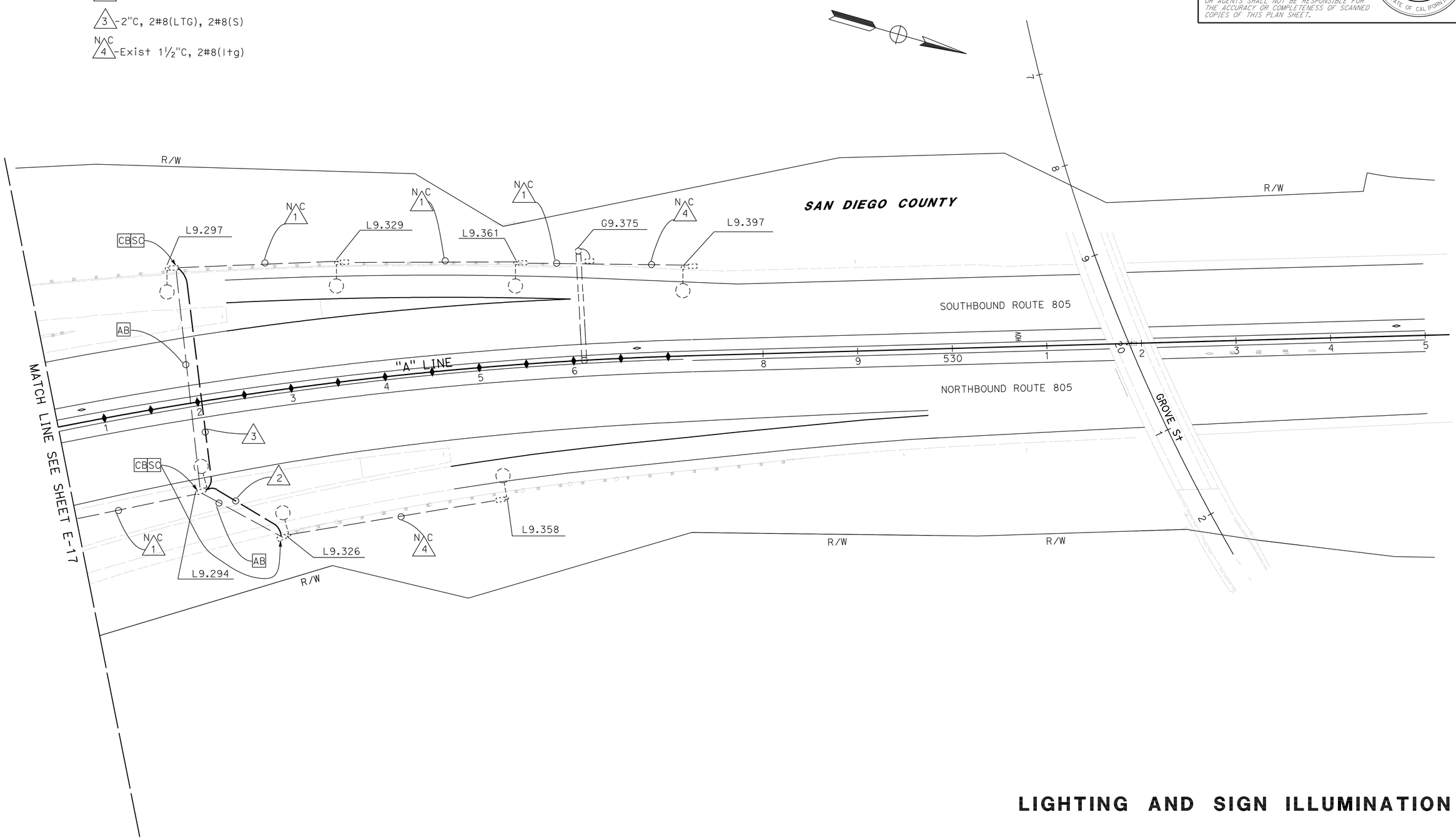

LIGHTING AND SIGN ILLUMINATION

APPROVED FOR ELECTRICAL WORK ONLY

SCALE: 1" = 50'

E-18

STATE OF CALIFORNIA - DEPARTMENT OF TRANSPORTATION
Caltrans® TRAFFIC ELECTRICAL

FUNCTIONAL SUPERVISOR: DALE WILSON
CALCULATED-DESIGNED BY: HECTOR SANTAMARIA
CHECKED BY: ENRIQUE BERNAL
REVISED BY
DATE REVISED

LAST REVISION 09-26-11
DATE PLOTTED => 09-DEC-2011
TIME PLOTTED => 15:27

Dist	COUNTY	ROUTE	POST MILES TOTAL PROJECT	SHEET No.	TOTAL SHEETS
11	SD	54,805	1.8,5.5/9.4	436	635

Héctor A. Santamaría 08-25-11
REGISTERED ELECTRICAL ENGINEER DATE

12-5-11
PLANS APPROVAL DATE

REGISTERED PROFESSIONAL ENGINEER
HECTOR A. SANTAMARIA
No. 18207
Exp. 12-31-11
ELECTRICAL
STATE OF CALIFORNIA

THE STATE OF CALIFORNIA OR ITS OFFICERS OR AGENTS SHALL NOT BE RESPONSIBLE FOR THE ACCURACY OR COMPLETENESS OF SCANNED COPIES OF THIS PLAN SHEET.

CIRCUIT BREAKERS

MAIN 2P-200 A
A-1P-15 A
B, C } 2P-40 A
D, E } 2P-40 A
F, G } 2P-30 A
H, I } 2P-30 A
J -1P-15 A
K -1P-15 A
L, M } 2P-15 A

① - LTG
② - LTG(HOV)
③ - SIGN
④ - SIGN(HOV)
⑤ - ICC
⑥ - CCTV#145
⑦ - PEU

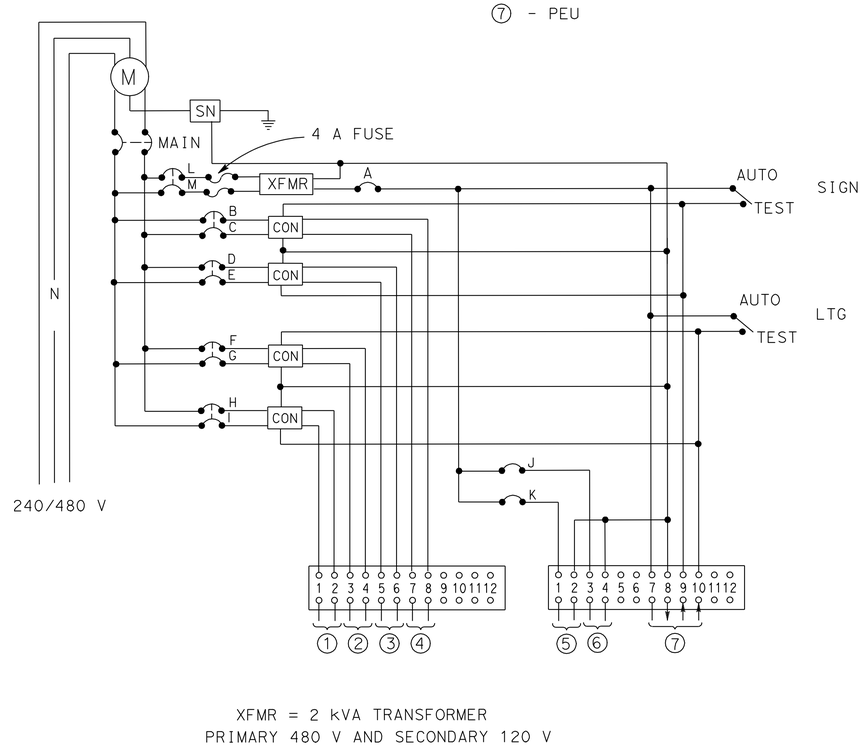

XFMR = 2 kVA TRANSFORMER
PRIMARY 480 V AND SECONDARY 120 V

WIRING DIAGRAM "D" A9.14

(TYPE III-CF SERVICE EQUIPMENT ENCLOSURE
SEE Std PLANS RSP ES-2C & RSP ES-2E)

APPROVED FOR ELECTRICAL WORK ONLY

LIGHTING AND SIGN ILLUMINATION (ELECTRICAL DETAILS)

NO SCALE

E-19

STATE OF CALIFORNIA - DEPARTMENT OF TRANSPORTATION
Caltrans® TRAFFIC ELECTRICAL

FUNCTIONAL SUPERVISOR: DALE WILSON
CALCULATED-DESIGNED BY: HECTOR SANTAMARIA
CHECKED BY: ENRIQUE BERNAL
REVISED BY
DATE REVISED

LAST REVISION 09-26-11
DATE PLOTTED => 09-DEC-2011
TIME PLOTTED => 15:27

Dist	COUNTY	ROUTE	POST MILES TOTAL PROJECT	SHEET No.	TOTAL SHEETS
11	SD	54,805	1.8,5.5/9.4	437	635

Héctor A. Santamaría 08-25-11
REGISTERED ELECTRICAL ENGINEER DATE

12-5-11
PLANS APPROVAL DATE

REGISTERED PROFESSIONAL ENGINEER
HECTOR A. SANTAMARIA
No. 18207
Exp. 12-31-11
ELECTRICAL
STATE OF CALIFORNIA

THE STATE OF CALIFORNIA OR ITS OFFICERS OR AGENTS SHALL NOT BE RESPONSIBLE FOR THE ACCURACY OR COMPLETENESS OF SCANNED COPIES OF THIS PLAN SHEET.

CONDUIT NOTES:

1. -Exist 2-3"C, 6 slc, 8 dlc, stc
   RC stc, 2 dlc
   ADD 4 DLC, 2-STC
2. -Exist 3"C, 6 slc, 8 loop wires, stc
3. N/C -Exist 1½"C, sic.
4. -2"C, 4 DLC, 2-STC

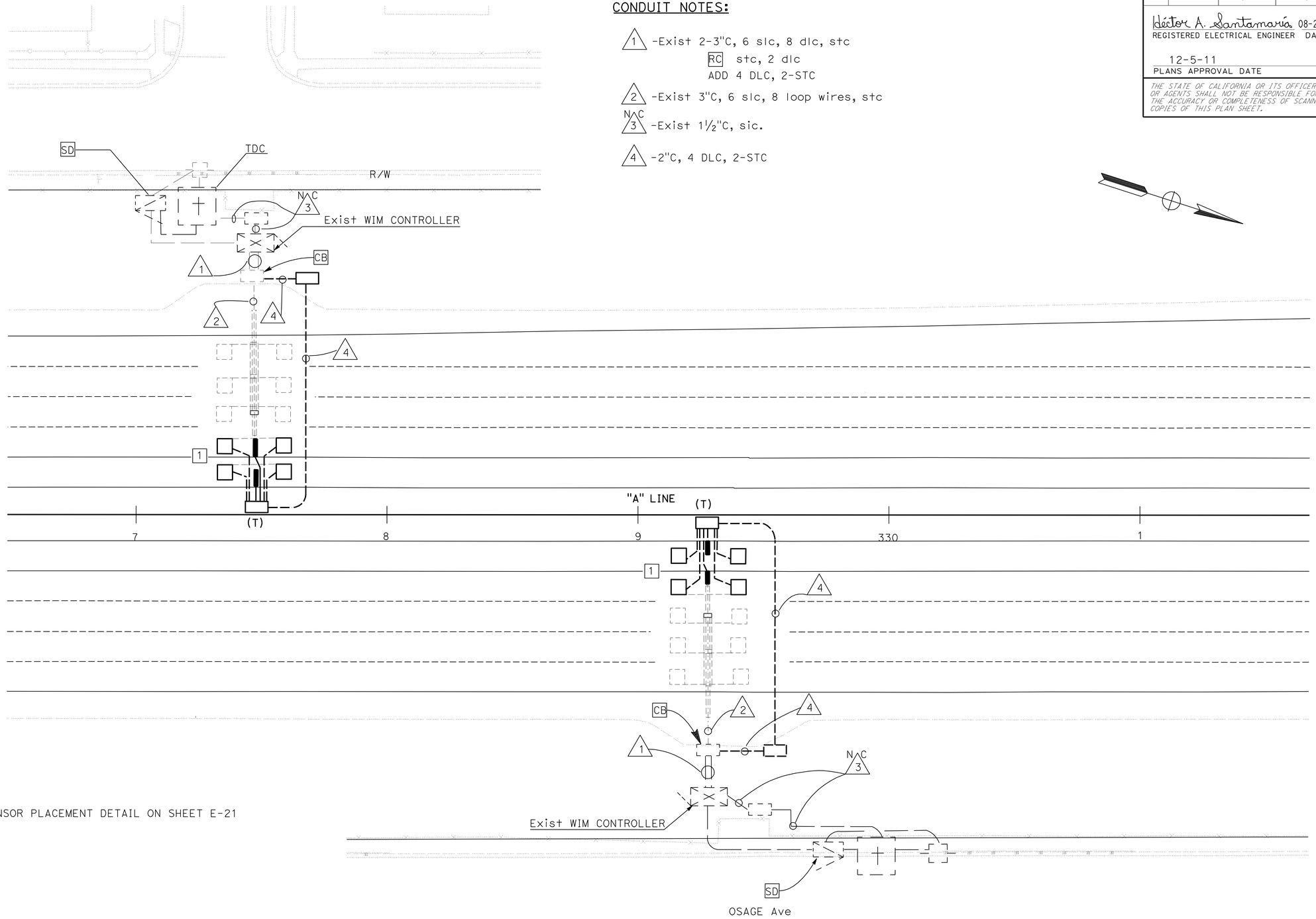

NOTE:

1 -SEE SENSOR PLACEMENT DETAIL ON SHEET E-21

MODIFY WEIGH-IN-MOTION SYSTEM

SCALE: 1" = 20'

APPROVED FOR ELECTRICAL WORK ONLY

E-20

STATE OF CALIFORNIA - DEPARTMENT OF TRANSPORTATION
Caltrans® TRAFFIC ELECTRICAL

FUNCTIONAL SUPERVISOR: DALE WILSON
CALCULATED-DESIGNED BY: HECTOR SANTAMARIA
CHECKED BY: ENRIQUE BERNAL
REVISED BY
DATE REVISED

LAST REVISION 09-26-11
DATE PLOTTED => 12-DEC-2011
TIME PLOTTED => 12:32

Dist	COUNTY	ROUTE	POST MILES TOTAL PROJECT	SHEET No.	TOTAL SHEETS
11	SD	54,805	1.8,5.5/9.4	438	635

Héctor A. Santamaría 08-25-11
REGISTERED ELECTRICAL ENGINEER DATE

12-5-11
PLANS APPROVAL DATE

REGISTERED PROFESSIONAL ENGINEER HECTOR A. SANTAMARIA No. 18207 Exp. 12-31-11 ELECTRICAL STATE OF CALIFORNIA

THE STATE OF CALIFORNIA OR ITS OFFICERS OR AGENTS SHALL NOT BE RESPONSIBLE FOR THE ACCURACY OR COMPLETENESS OF SCANNED COPIES OF THIS PLAN SHEET.

NOTES:

1 - PLACE 2" DUCT TAPE ALONG THE EDGE OF SAW CUT BEFORE POURING EPOXY SEALANT. LEVEL EPOXY SEALANT TO FINISHED ROAD SURFACE AND REMOVE DUCT TAPE WHEN EPOXY IS CURED.

2 - AB Exist PIEZO

3 - ADD A NEW EMBEDDED AXLE SENSOR ON HOV LANE AND NUMBER ONE LANE.

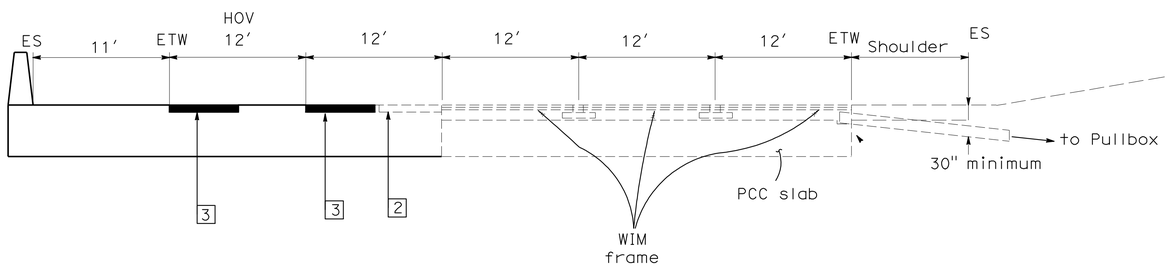

WEIGH-IN-MOTION SYSTEM

FIRST LOOP DLC	SENSOR TRANSMISSION CABLE	SECOND LOOP DLC
1-N-1 1-NHOV	1-N-1S 1-NHOV-S	1-N-2 1-NHOV-2

PIEZO SENSOR IDENTIFICATION

DIRECTION OF TRAVEL ⟶
(TYPICAL)

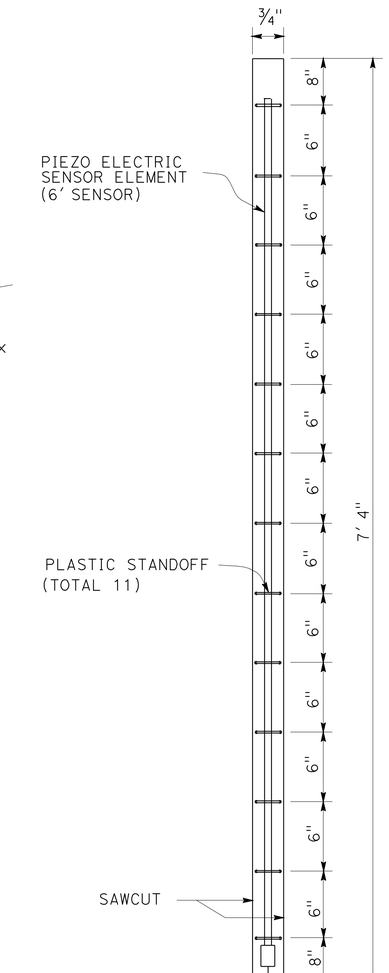

DETAIL "M"

SENSOR INSTALLATION

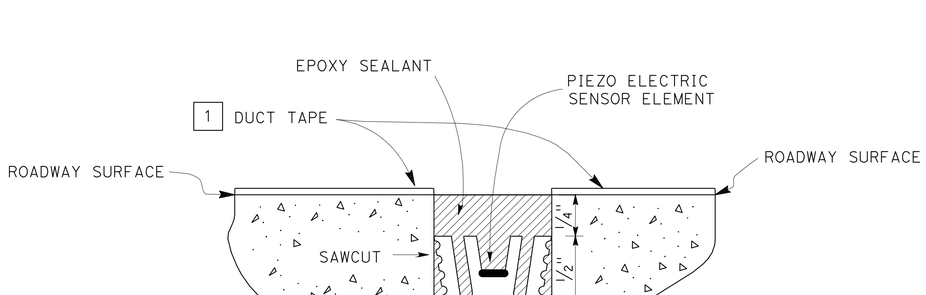

SECTION B-B

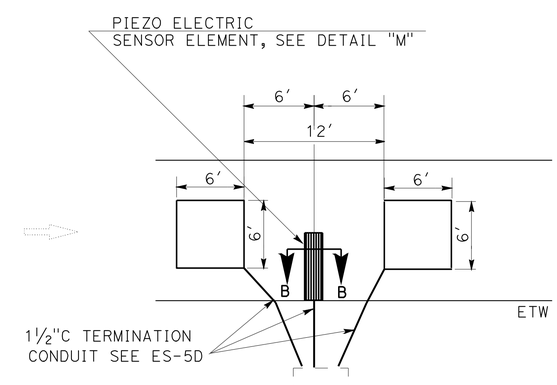

SENSOR PLACEMENT

TYPICAL

PIEZOELECTRIC SENSOR INSTALLATION DETAILS

APPROVED FOR ELECTRICAL WORK ONLY

MODIFY WEIGH-IN-MOTION SYSTEM (ELECTRICAL DETAIL)

NO SCALE

E-21

STATE OF CALIFORNIA - DEPARTMENT OF TRANSPORTATION
Caltrans® TRAFFIC ELECTRICAL

FUNCTIONAL SUPERVISOR: DALE WILSON
CALCULATED-DESIGNED BY: HECTOR SANTAMARIA
CHECKED BY: ENRIQUE BERNAL
REVISED BY
DATE REVISED

LAST REVISION 09-26-11
DATE PLOTTED => 09-DEC-2011
TIME PLOTTED => 15:27

Dist	COUNTY	ROUTE	POST MILES TOTAL PROJECT	SHEET No.	TOTAL SHEETS
11	SD	54,805	1.8,5.5/9.4	439	635

Héctor A. Santamaría 08-25-11
REGISTERED ELECTRICAL ENGINEER DATE

12-5-11
PLANS APPROVAL DATE

REGISTERED PROFESSIONAL ENGINEER
HECTOR A. SANTAMARIA
No. 18207
Exp. 12-31-11
ELECTRICAL
STATE OF CALIFORNIA

THE STATE OF CALIFORNIA OR ITS OFFICERS OR AGENTS SHALL NOT BE RESPONSIBLE FOR THE ACCURACY OR COMPLETENESS OF SCANNED COPIES OF THIS PLAN SHEET.

NOTES:

1 - FOR LOOP PLACEMENT SEE DETAIL "ML" ON TNIS SHEET.

2 - FOR COMPLETE RIGHT OF WAY AND ACCURATE ACCESS DATA, SEE RIGHT OF WAY RECORD MAPS AT DISTRICT OFFICE.

3 - RC EXISTING PULL BOX.

4 - AB EXISTING CONDUIT.

5 - RC EXISTING MAINLANE LOOP DETECTOR CABLES. INSTALL NEW MAINLANE LOOP DETECTOR CABLES AS SHOWN IN CONDUIT NOTES.

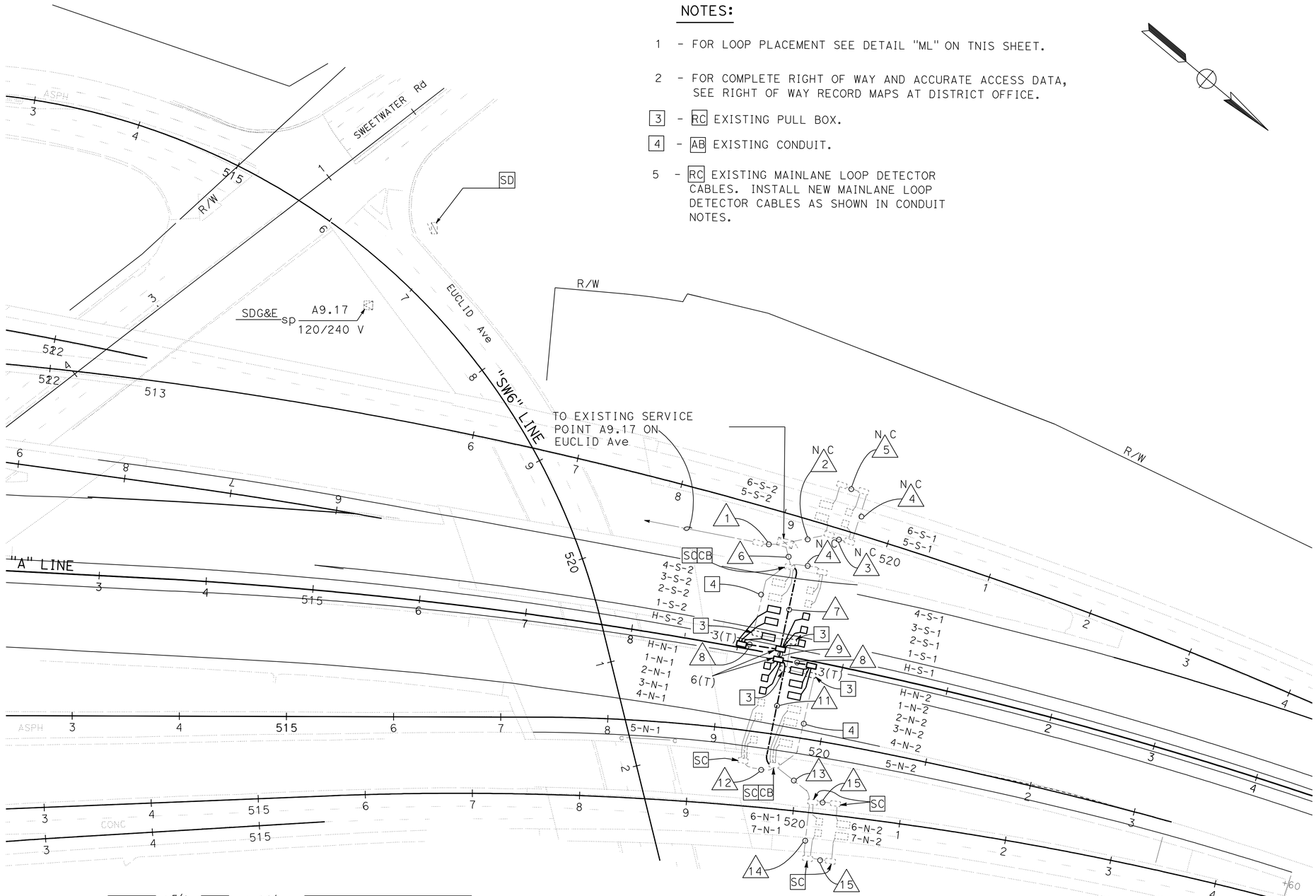

CONDUIT NOTES:

N C 1 - Exist 1½"C, 2#8(TMS CONTROLLER)

N C 2 - Exist 1½"C, 4 dlc.

N C 3 - Exist 1½"C, 3 dlc.

N C 4 - Exist 2"C, 2 dlc.

N C 5 - Exist 1½"C, 1 dlc.

6 - Exist 3"C, 22 dlc, 1 sic.
RC 18 dlc, 1 sic.
ADD 22 DLC.

7 - 3"C, 16 DLC, 12 LOOP WIRES

8 - 3"C, 6 LOOP WIRES

9 - 3"C, 16 DLC

11 - 3"C, 16 DLC, 12 LOOP WIRES

12 - Exist 1½"C, 3 dlc, 1 sic.
RC 1 sic, 3 dlc.
ADD 3 DLC.

13 - Exist 1½"C, 4 dlc.
RC 4 dlc.
ADD 4 DLC.

14 - Exist 2"C, 2 dlc.
RC 2 dlc.
ADD 2 DLC.

15 - Exist 1½"C, 1 dlc.
RC 1 dlc.
ADD 1 DLC.

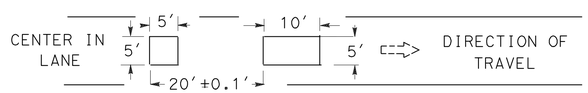

DETAIL 'ML'

TYPICAL TYPE A LOOP PLACEMENT
NO SCALE

LANE NUMBER OR HOV
DIRECTION OF TRAVEL
LOOP NUMBER IN DIRECTION OF TRAVEL

2 - N - 1 (TYPICAL)

MAINLANE LOOP DETECTOR IDENTIFICATION

MODIFY TRAFFIC MONITORING STATION

SCALE: 1" = 50'

E-22

APPROVED FOR ELECTRICAL WORK ONLY

STATE OF CALIFORNIA - DEPARTMENT OF TRANSPORTATION
Caltrans TRAFFIC ELECTRICAL

FUNCTIONAL SUPERVISOR: DALE WILSON
CALCULATED-DESIGNED BY: HECTOR SANTAMARIA
CHECKED BY: ENRIQUE BERNAL
REVISED BY / DATE REVISED

LAST REVISION 09-26-11
DATE PLOTTED => 09-DEC-2011
TIME PLOTTED => 15:57

Dist	COUNTY	ROUTE	POST MILES TOTAL PROJECT	SHEET No.	TOTAL SHEETS
11	SD	54,805	1.8,5.5/9.4	440	635

Héctor A. Santamaría 08-25-11
REGISTERED ELECTRICAL ENGINEER DATE

12-5-11
PLANS APPROVAL DATE

REGISTERED PROFESSIONAL ENGINEER HECTOR A. SANTAMARIA No. 18207 Exp. 12-31-11 ELECTRICAL STATE OF CALIFORNIA

THE STATE OF CALIFORNIA OR ITS OFFICERS OR AGENTS SHALL NOT BE RESPONSIBLE FOR THE ACCURACY OR COMPLETENESS OF SCANNED COPIES OF THIS PLAN SHEET.

NOTES:

1 - RS EXISTING MVDS UNIT, CABLE AND COMMUNICATIONS INTERFACE. INSTALL AND CONFIGURE MVDS UNIT, CABLE AND COMMUNICATIONS INTERFACE. SEE ELECTRICAL DETAILS ON E-28 FOR MVDS.

2 - ADJUST AND CALIBRATE THE SOLAR MVDS UNITS TO DETECTION ZONES AS SHOWN FOR TEMPORARY STRIPPING.

3 - DETECTION ZONES FOR TEMPORARY STRIPPING.

4 - AFTER THE TEMPORARY STRIPPING IS REMOVED RE-ADJUST AND CALIBRATE SOLAR MVDS TO FINAL STRIPPING.

5 - DETECTION ZONES FOR FINAL STRIPPING.

6 - RS EXISTING BATTERY AND REPLACE BATTERY.

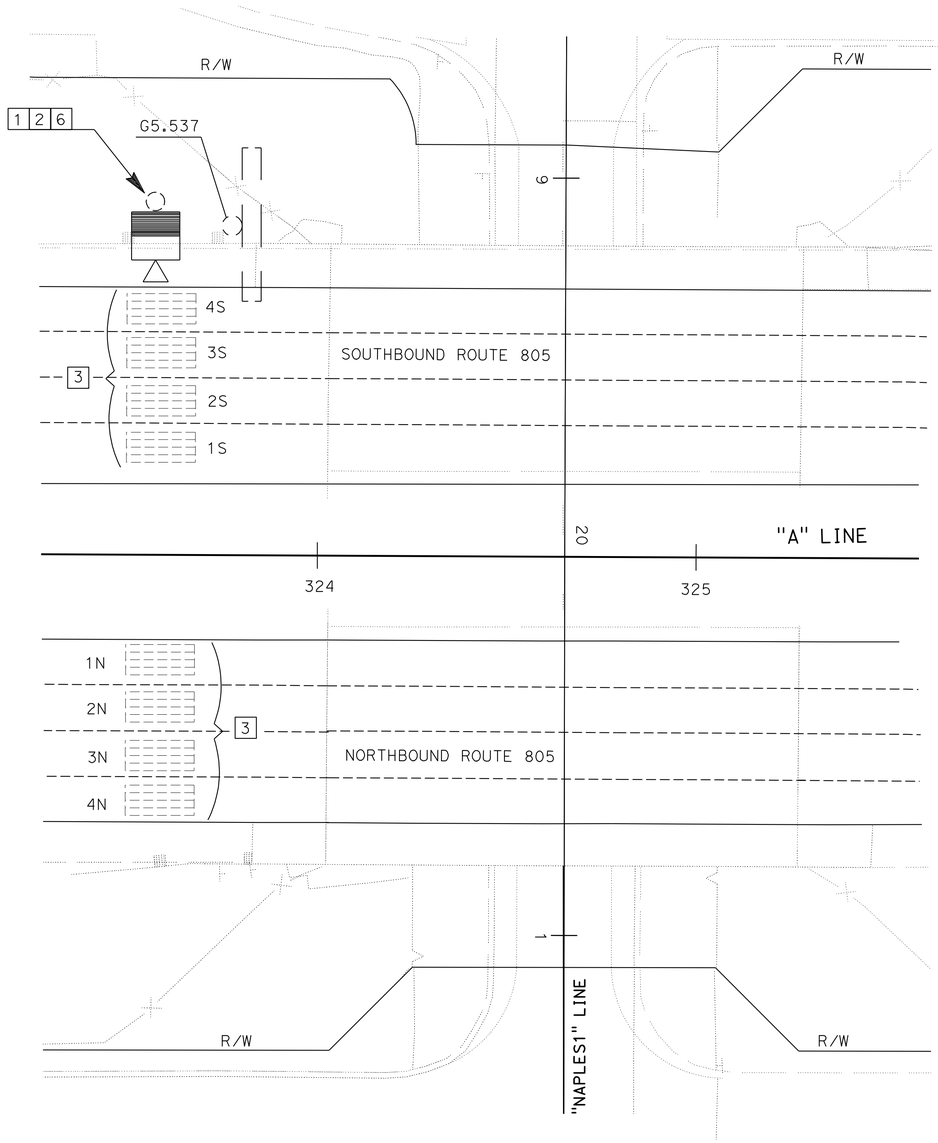

TEMPORARY STAGE CONSTRUCTION STRIPPING RADAR DETECTION ZONE

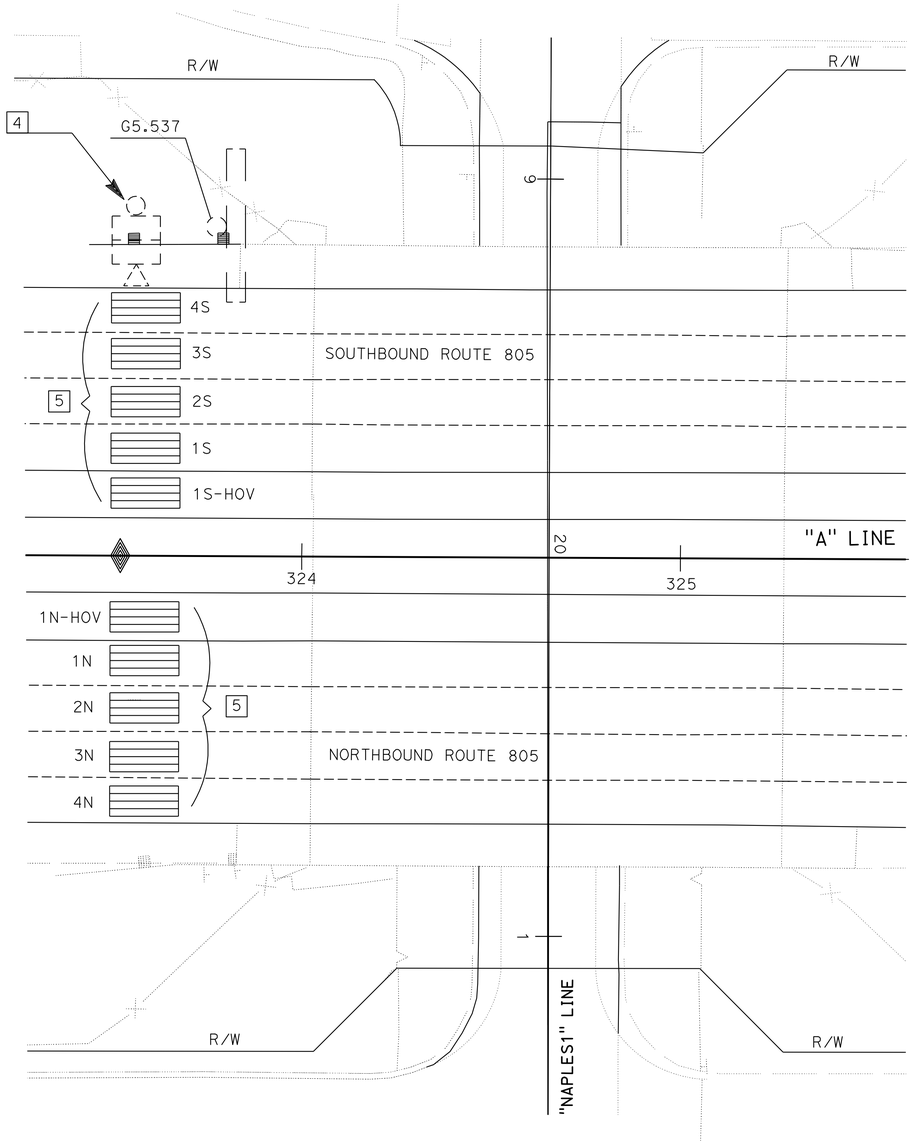

FINAL STRIPPING RADAR DETECTION ZONE

MICROWAVE VEHICLE DETECTION SYSTEM
(LOCATION 1)

APPROVED FOR ELECTRICAL WORK ONLY

NO SCALE

E-23

STATE OF CALIFORNIA - DEPARTMENT OF TRANSPORTATION
Caltrans® TRAFFIC ELECTRICAL

HECTOR SANTAMARIA | ENRIQUE BERNAL | DALE WILSON

REVISED BY | DATE REVISED | CALCULATED-DESIGNED BY | CHECKED BY | FUNCTIONAL SUPERVISOR

LAST REVISION 09-26-11 | DATE PLOTTED => 12-DEC-2011 | TIME PLOTTED => 06:12

Dist	COUNTY	ROUTE	POST MILES TOTAL PROJECT	SHEET No.	TOTAL SHEETS
11	SD	54,805	1.8,5.5/9.4	441	635

Héctor A. Santamaría 08-25-11
REGISTERED ELECTRICAL ENGINEER DATE

12-5-11
PLANS APPROVAL DATE

REGISTERED PROFESSIONAL ENGINEER HECTOR A. SANTAMARIA No. 18207 Exp. 12-31-11 ELECTRICAL STATE OF CALIFORNIA

THE STATE OF CALIFORNIA OR ITS OFFICERS OR AGENTS SHALL NOT BE RESPONSIBLE FOR THE ACCURACY OR COMPLETENESS OF SCANNED COPIES OF THIS PLAN SHEET.

NOTES:

1 - RS EXISTING MVDS UNIT, CABLE AND COMMUNICATIONS INTERFACE. INSTALL AND CONFIGURE MVDS UNIT, CABLE AND COMMUNICATIONS INTERFACE. SEE ELECTRICAL DETAILS ON E-28 FOR MVDS.

2 - ADJUST AND CALIBRATE THE SOLAR MVDS UNITS TO DETECTION ZONES AS SHOWN FOR TEMPORARY STRIPPING.

3 - DETECTION ZONES FOR TEMPORARY STRIPPING.

4 - AFTER THE TEMPORARY STRIPPING IS REMOVED RE-ADJUST AND CALIBRATE SOLAR MVDS TO FINAL STRIPPING.

5 - DETECTION ZONES FOR FINAL STRIPPING.

6 - RS EXISTING BATTERY AND REPLACE BATTERY.

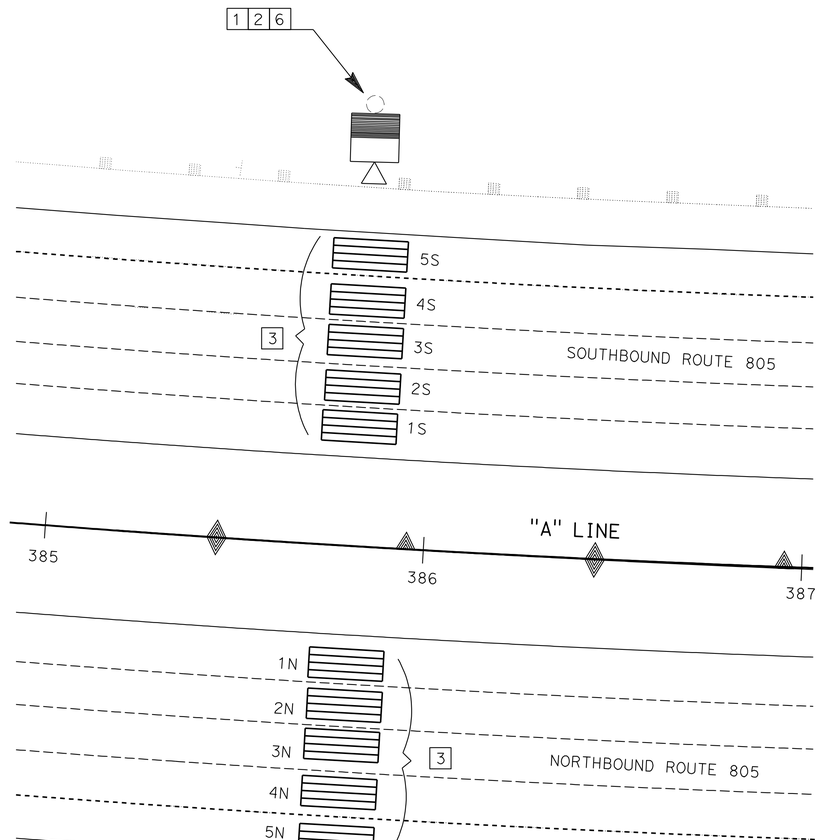

TEMPORARY STAGE CONSTRUCTION STRIPPING RADAR DETECTION ZONE

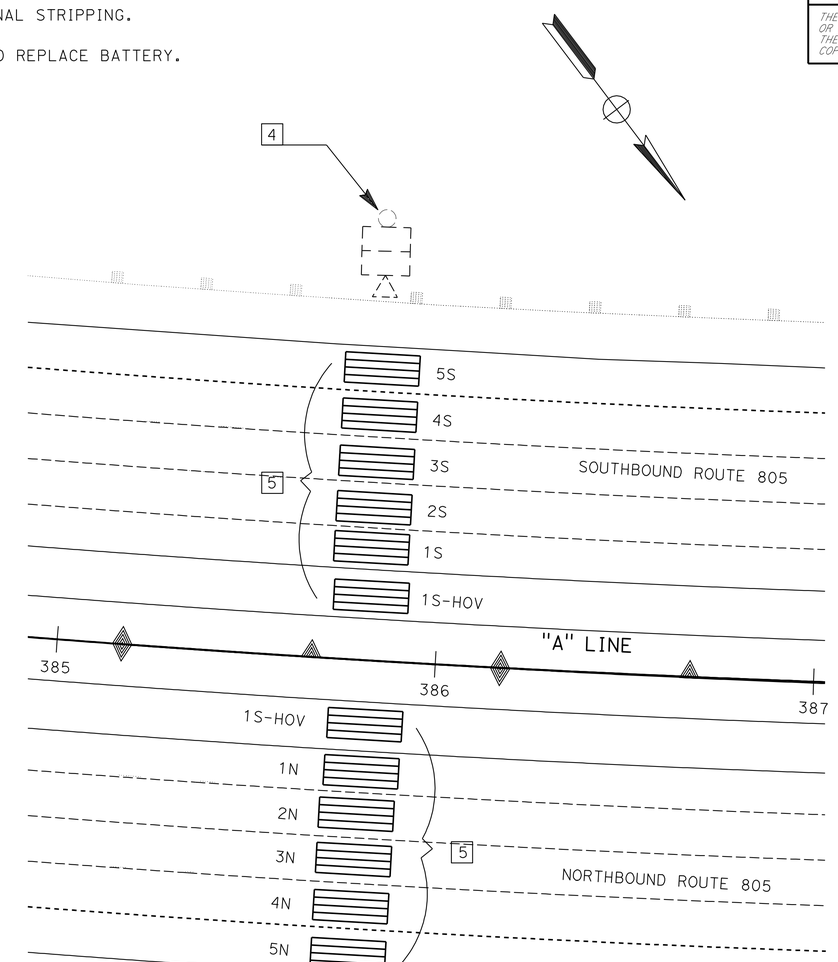

FINAL STRIPPING RADAR DETECTION ZONE

MICROWAVE VEHICLE DETECTION SYSTEM
(LOCATION 2)

APPROVED FOR ELECTRICAL WORK ONLY

NO SCALE

E-24

STATE OF CALIFORNIA - DEPARTMENT OF TRANSPORTATION
Caltrans® TRAFFIC ELECTRICAL

FUNCTIONAL SUPERVISOR: DALE WILSON
CALCULATED-DESIGNED BY: ENRIQUE BERNAL
CHECKED BY: HECTOR SANTAMARIA
REVISED BY / DATE REVISED

LAST REVISION 09-26-11
DATE PLOTTED => 12-DEC-2011
TIME PLOTTED => 06:12

Dist	COUNTY	ROUTE	POST MILES TOTAL PROJECT	SHEET No.	TOTAL SHEETS
11	SD	54,805	1.8,5.5/9.4	442	635

Héctor A. Santamaría 08-25-11
REGISTERED ELECTRICAL ENGINEER DATE

12-5-11
PLANS APPROVAL DATE

REGISTERED PROFESSIONAL ENGINEER
HECTOR A. SANTAMARÍA
No. 18207
Exp. 12-31-11
ELECTRICAL
STATE OF CALIFORNIA

THE STATE OF CALIFORNIA OR ITS OFFICERS OR AGENTS SHALL NOT BE RESPONSIBLE FOR THE ACCURACY OR COMPLETENESS OF SCANNED COPIES OF THIS PLAN SHEET.

NOTES:

1 - RS EXISTING MVDS UNIT, CABLE AND COMMUNICATIONS INTERFACE. INSTALL AND CONFIGURE MVDS UNIT, CABLE AND COMMUNICATIONS INTERFACE. SEE ELECTRICAL DETAILS ON E-28 FOR MVDS.

2 - ADJUST AND CALIBRATE THE SOLAR MVDS UNITS TO DETECTION ZONES AS SHOWN FOR TEMPORARY STRIPPING.

3 - DETECTION ZONES FOR TEMPORARY STRIPPING.

4 - AFTER THE TEMPORARY STRIPPING IS REMOVED RE-ADJUST AND CALIBRATE SOLAR MVDS TO FINAL STRIPPING.

5 - DETECTION ZONES FOR FINAL STRIPPING.

6 - RS EXISTING BATTERY AND REPLACE BATTERY.

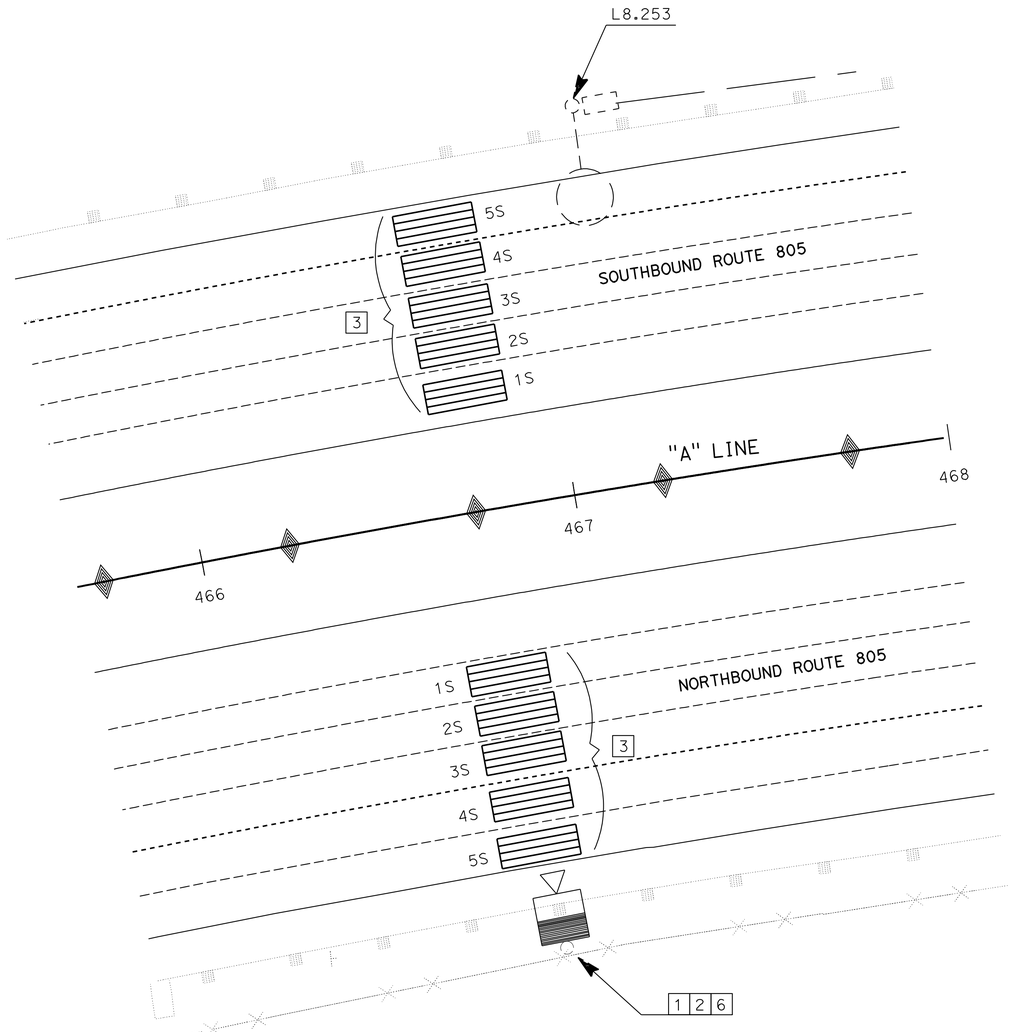

TEMPORARY STAGE CONSTRUCTION STRIPPING RADAR DETECTION ZONE

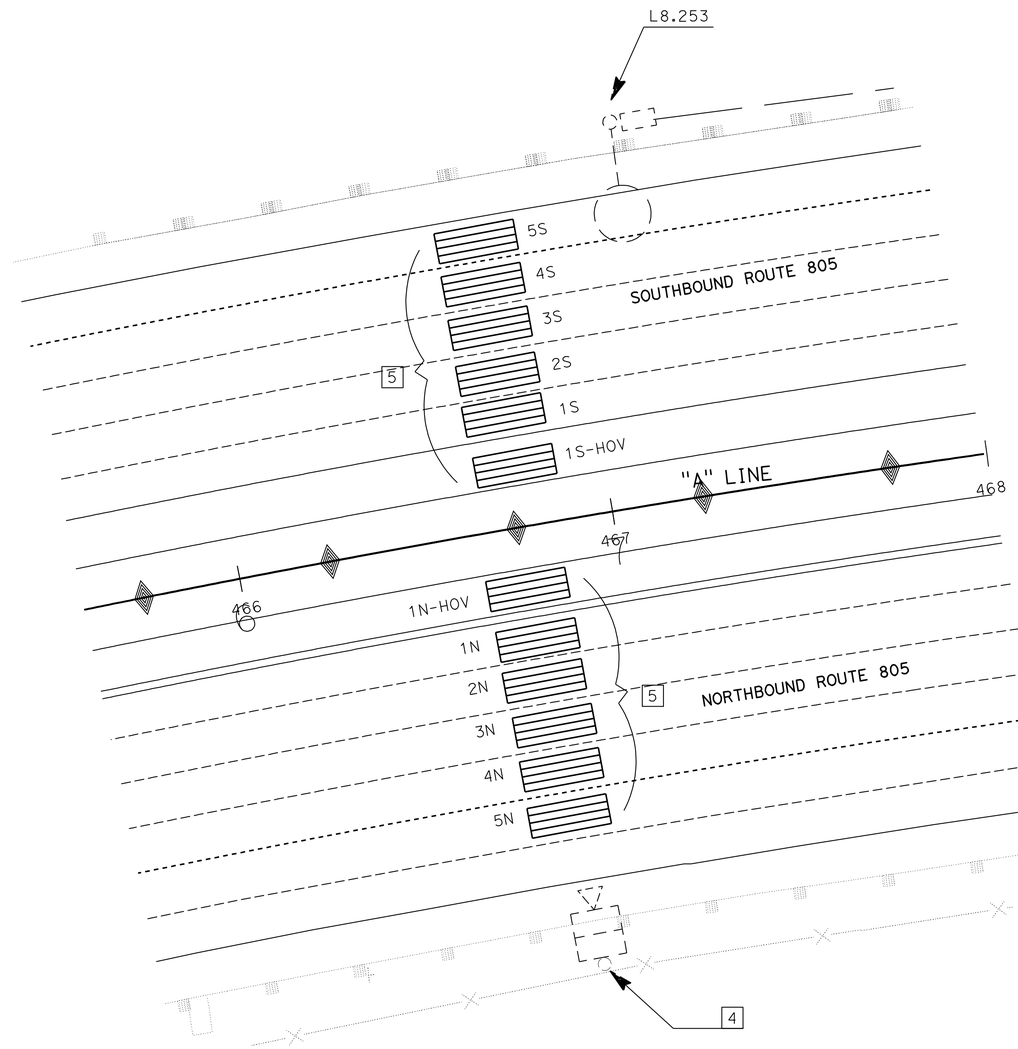

FINAL STRIPPING RADAR DETECTION ZONE

MICROWAVE VEHICLE DETECTION SYSTEM
(LOCATION 3)

APPROVED FOR ELECTRICAL WORK ONLY

NO SCALE

E-25

STATE OF CALIFORNIA - DEPARTMENT OF TRANSPORTATION
Caltrans® TRAFFIC ELECTRICAL

FUNCTIONAL SUPERVISOR: DALE WILSON
CALCULATED-DESIGNED BY: HECTOR SANTAMARIA
CHECKED BY: ENRIQUE BERNAL
REVISED BY
DATE REVISED

LAST REVISION 09-26-11
DATE PLOTTED => 12-DEC-2011
TIME PLOTTED => 06:12

Dist	COUNTY	ROUTE	POST MILES TOTAL PROJECT	SHEET No.	TOTAL SHEETS
11	SD	54,805	1.8,5.5/9.4	443	635

Héctor A. Santamaría 08-25-11
REGISTERED ELECTRICAL ENGINEER DATE

12-5-11
PLANS APPROVAL DATE

REGISTERED PROFESSIONAL ENGINEER
HECTOR A. SANTAMARIA
No. 18207
Exp. 12-31-11
ELECTRICAL
STATE OF CALIFORNIA

THE STATE OF CALIFORNIA OR ITS OFFICERS OR AGENTS SHALL NOT BE RESPONSIBLE FOR THE ACCURACY OR COMPLETENESS OF SCANNED COPIES OF THIS PLAN SHEET.

NOTES:

1 - RS EXISTING MVDS UNIT, CABLE AND COMMUNICATIONS INTERFACE. INSTALL AND CONFIGURE MVDS UNIT, CABLE AND COMMUNICATIONS INTERFACE. SEE ELECTRICAL DETAILS ON E-28 FOR MVDS.

2 - ADJUST AND CALIBRATE THE SOLAR MVDS UNITS TO DETECTION ZONES AS SHOWN FOR TEMPORARY STRIPPING.

3 - DETECTION ZONES FOR TEMPORARY STRIPPING.

4 - AFTER THE TEMPORARY STRIPPING IS REMOVED RE-ADJUST AND CALIBRATE SOLAR MVDS TO FINAL STRIPPING.

5 - DETECTION ZONES FOR FINAL STRIPPING.

6 - RS EXISTING BATTERY AND REPLACE BATTERY.

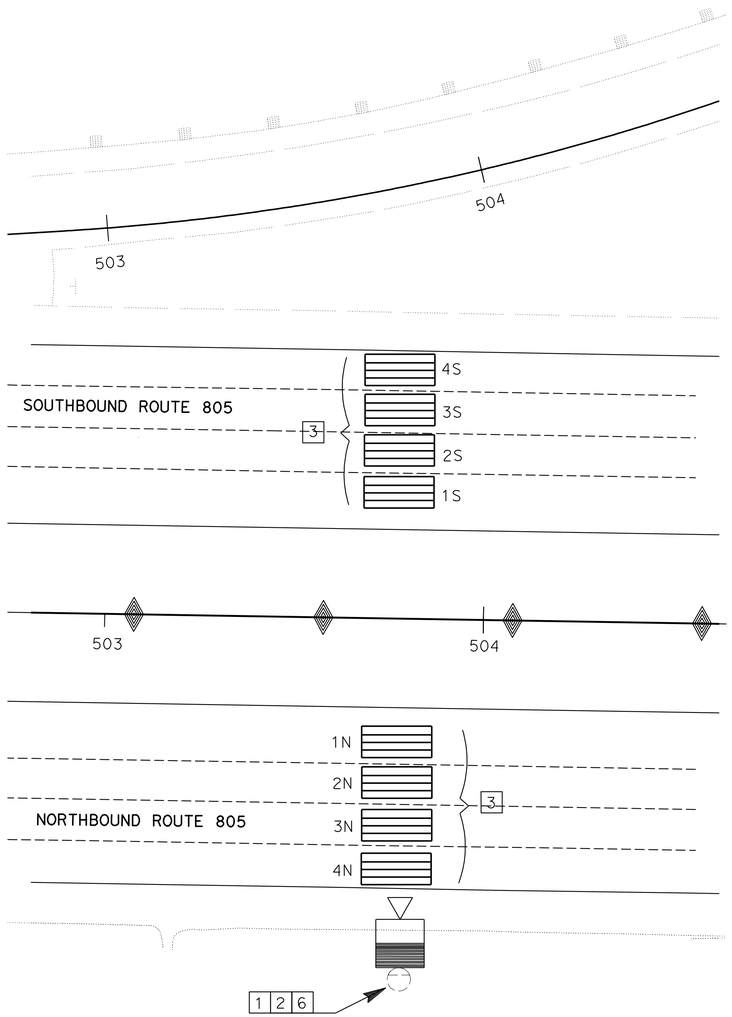

TEMPORARY STAGE CONSTRUCTION STRIPPING RADAR DETECTION ZONE

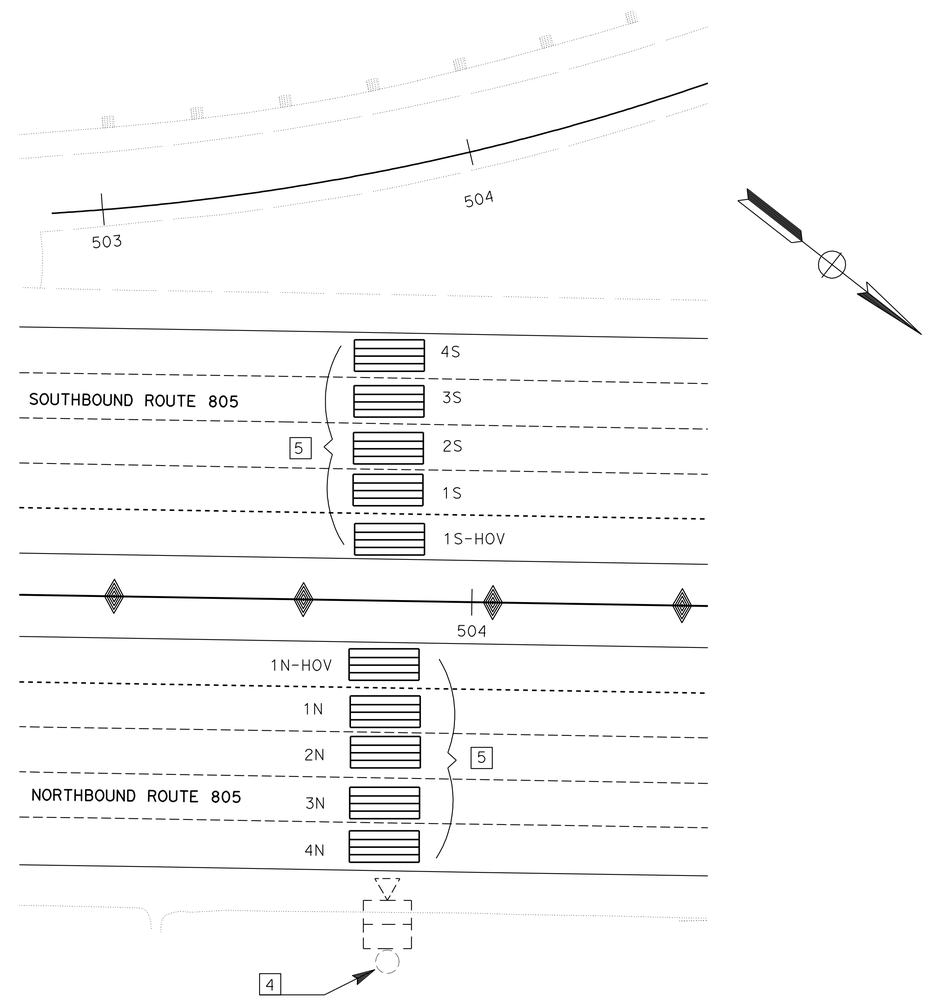

FINAL STRIPPING RADAR DETECTION ZONE

MICROWAVE VEHICLE DETECTION SYSTEM
(LOCATON 4)

APPROVED FOR ELECTRICAL WORK ONLY

NO SCALE

E-26

STATE OF CALIFORNIA - DEPARTMENT OF TRANSPORTATION
Caltrans® TRAFFIC ELECTRICAL

FUNCTIONAL SUPERVISOR: DALE WILSON
CALCULATED-DESIGNED BY: HECTOR SANTAMARIA
CHECKED BY: ENRIQUE BERNAL
REVISED BY
DATE REVISED

LAST REVISION 09-26-11
DATE PLOTTED => 12-DEC-2011
TIME PLOTTED => 06:12

Dist	COUNTY	ROUTE	POST MILES TOTAL PROJECT	SHEET No.	TOTAL SHEETS
11	SD	54,805	1.8,5.5/9.4	444	635

Héctor A. Santamaría 08-25-11
REGISTERED ELECTRICAL ENGINEER DATE

12-5-11
PLANS APPROVAL DATE

REGISTERED PROFESSIONAL ENGINEER
HECTOR A. SANTAMARIA
No. 18207
Exp. 12-31-11
ELECTRICAL
STATE OF CALIFORNIA

THE STATE OF CALIFORNIA OR ITS OFFICERS OR AGENTS SHALL NOT BE RESPONSIBLE FOR THE ACCURACY OR COMPLETENESS OF SCANNED COPIES OF THIS PLAN SHEET.

NOTES:

1 - MVDS TERMINAL BLOCK.

2 - INSTALL SENSOR UNITS AS REQUIRED TO DETECT ZONES AS SHOWN ON PLANS.

3 - INSTALL COMMUNICATIONS INTERFACE AS REQUIRED.

4 - GROUNDING LUG BONDED TO ENCLOSURE.

5 - THE CONTRACTOR SHALL VERIFY ALL CONTROLLING FIELD DIMENSIONS AND ELECTRICAL CONDITIONS BEFORE ORDERING, FABRICATING OR INSTALLING MATERIAL.

LEGEND:

NETWORK PORT

SERIAL PORT

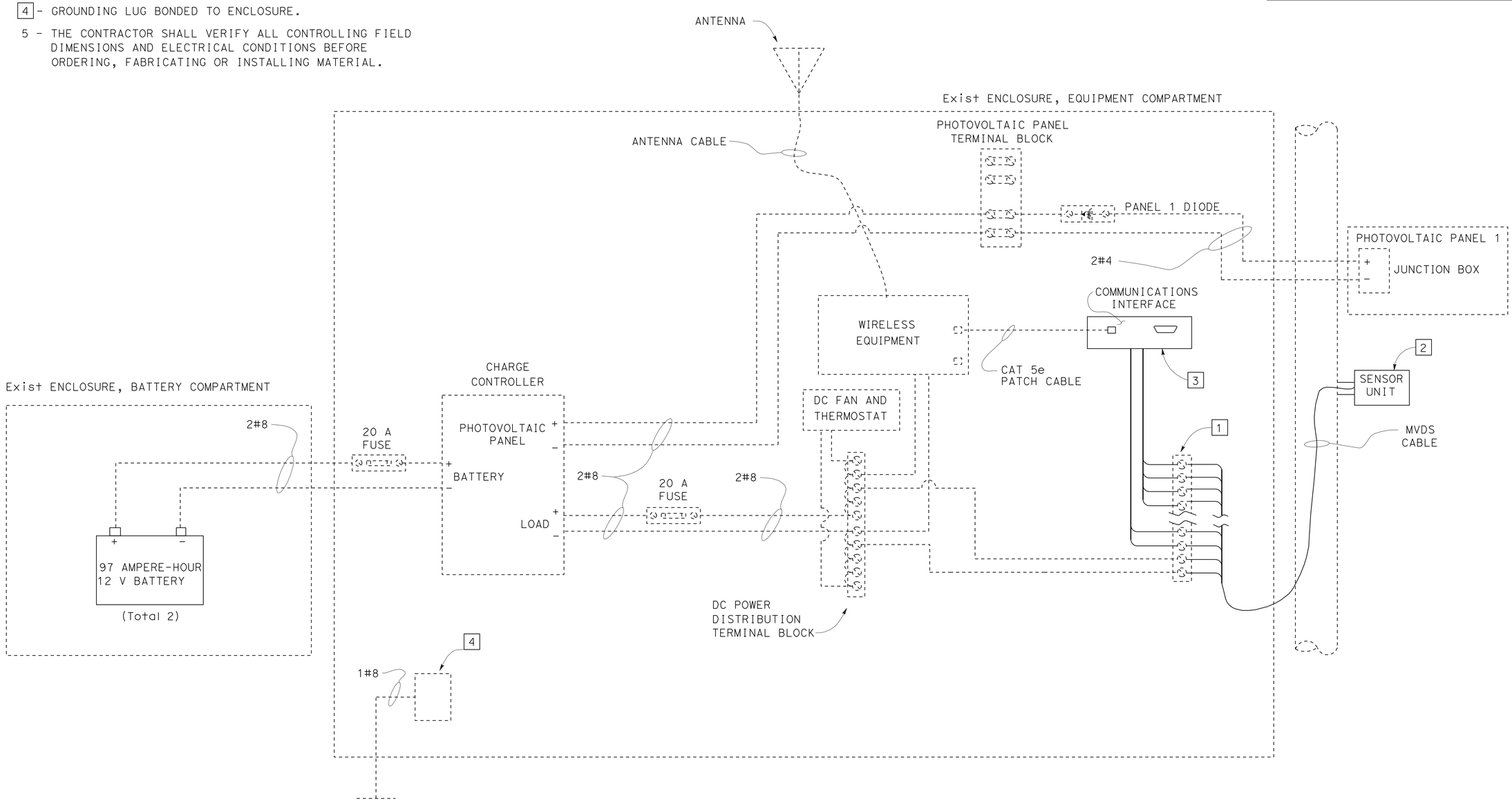

SOLAR MICROWAVE VEHICLE DETECTION SYSTEM

POLE MOUNTED CABINET CONNECTIONS

MICROWAVE VEHICLE DETECTION SYSTEM ELECTRICAL DETAILS

APPROVED FOR ELECTRICAL WORK ONLY

NO SCALE

E-27

STATE OF CALIFORNIA - DEPARTMENT OF TRANSPORTATION
Caltrans® TRAFFIC ELECTRICAL

FUNCTIONAL SUPERVISOR: DALE WILSON
CALCULATED-DESIGNED BY: HECTOR SANTAMARIA
CHECKED BY: ENRIQUE BERNAL
REVISED BY
DATE REVISED

LAST REVISION 09-26-11
DATE PLOTTED => 12-DEC-2011
TIME PLOTTED => 12:32

Dist	COUNTY	ROUTE	POST MILES TOTAL PROJECT	SHEET No.	TOTAL SHEETS
11	SD	54,805	1.8,5.5/9.4	445	635

Héctor A. Santamaría 08-25-11
REGISTERED ELECTRICAL ENGINEER DATE

12-5-11
PLANS APPROVAL DATE

REGISTERED PROFESSIONAL ENGINEER
HECTOR A. SANTAMARIA
No. 18207
Exp. 12-31-11
ELECTRICAL
STATE OF CALIFORNIA

THE STATE OF CALIFORNIA OR ITS OFFICERS OR AGENTS SHALL NOT BE RESPONSIBLE FOR THE ACCURACY OR COMPLETENESS OF SCANNED COPIES OF THIS PLAN SHEET.

NOTES:

1 - EXISTING 1" RECESSED COUPLING, AWAY FROM APPROACHING TRAFFIC.

2 - THE CONTRACTOR SHALL VERIFY ALL CONTROLLING FIELD DIMENSIONS BEFORE ORDERING OR FABRICATING MATERIAL.

3 - EXISTING TYPE VDS 35 POLE.

4 - SENSOR UNIT DIRECTED TOWARD TRAFFIC LANES PER MANUFACTURER'S RECOMMENDATION.

5 - EXISTING PHOTOVOLTAIC PANEL.

6 - MOUNTING HEIGHT PER MANUFACTURER'S RECOMMENDATION AND ENGINEER'S APPROVAL.

7 - SEE DETAIL A, FOR SENSOR UNIT ATTACHMENT.

8 - MOUNTING PLATE, ARTICULATING JOINT AND SENSOR UNIT ASSEMBLY CONNECTIONS PER MANUFACTURER'S RECOMMENDATIONS.

9 - EXISTING EQUIPMENT AND BATTERY ENCLOSURE.

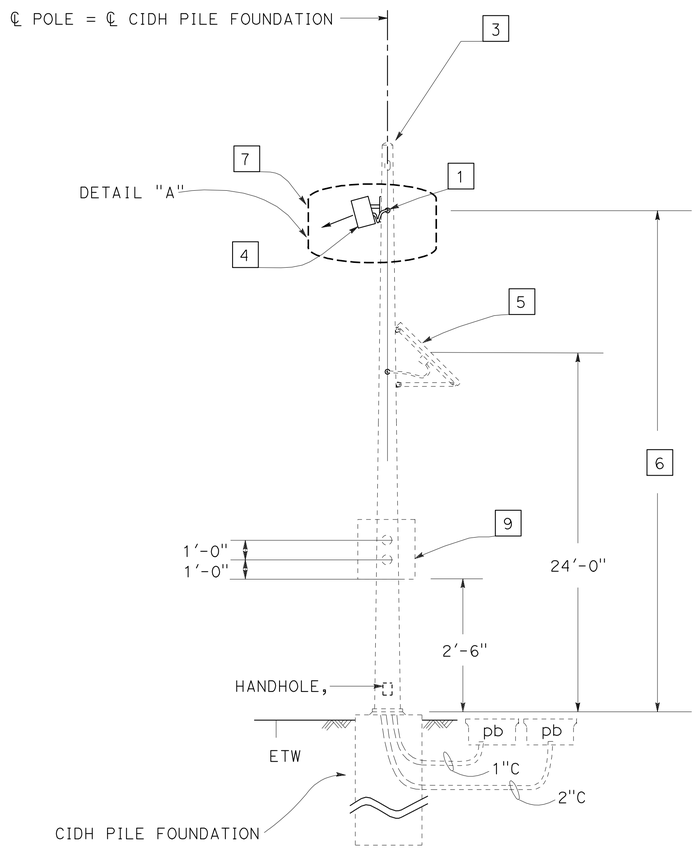

ELEVATION

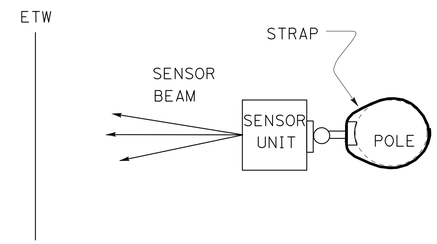

SECTION A-A

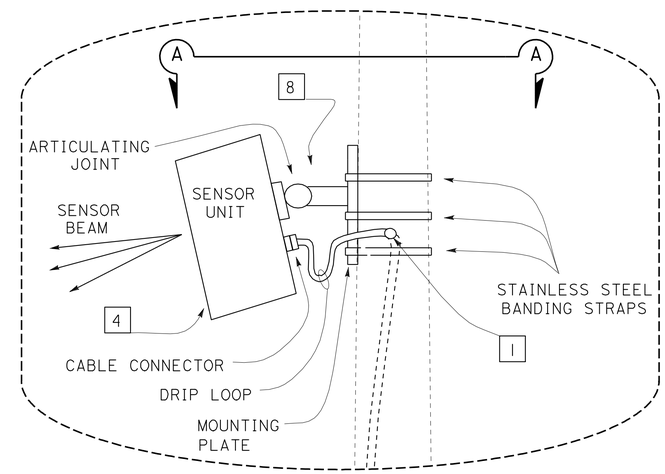

DETAIL "A"

MICROWAVE VEHICLE DETECTION SYSTEM
WITH PHOTOVOLTAIC PANEL

MICROWAVE VEHICLE DETECTION SYSTEM
ELECTRICAL DETAILS

APPROVED FOR ELECTRICAL WORK ONLY

NO SCALE

E-28

STATE OF CALIFORNIA - DEPARTMENT OF TRANSPORTATION
Caltrans
TRAFFIC ELECTRICAL

FUNCTIONAL SUPERVISOR: DALE WILSON
CALCULATED-DESIGNED BY: HECTOR SANTAMARIA
CHECKED BY: ENRIQUE BERNAL
REVISED BY
DATE REVISED

LAST REVISION 09-26-11
DATE PLOTTED => 12-DEC-2011
TIME PLOTTED => 06:12

Dist	COUNTY	ROUTE	POST MILES TOTAL PROJECT	SHEET No.	TOTAL SHEETS
11	SD	54,805	1.8,5.5/9.4	446	635

Héctor A. Santamaría 08-25-11
REGISTERED ELECTRICAL ENGINEER DATE

12-5-11
PLANS APPROVAL DATE

REGISTERED PROFESSIONAL ENGINEER
HECTOR A. SANTAMARÍA
No. 18207
Exp. 12-31-11
ELECTRICAL
STATE OF CALIFORNIA

THE STATE OF CALIFORNIA OR ITS OFFICERS OR AGENTS SHALL NOT BE RESPONSIBLE FOR THE ACCURACY OR COMPLETENESS OF SCANNED COPIES OF THIS PLAN SHEET.

CONDUIT NOTES:

1 - Exist 4"C, 2#14(fb), 2-9CSC, 1-12CSC, 25 dlc
RC 8 dlc
ADD 12 DLC

2 - Exist 4"C, 2#8(ltg), 2-9CSC, 1-12CSC, 22 dlc
RC 8 dlc
ADD 12 DLC

3 - Exist 4"C, 2#8(ltg), 2-9CSC, 1-12CSC, 20 dlc
RC 8 dlc
ADD 12 DLC

4 - Exist 4"C, 1-9CSC, 18 dlc
RC 8 dlc
ADD 12 DLC

N C 5 - Exist 2"C, 1 dlc

6 - Exist 3"C, 16 dlc
RC 8 dlc
ADD 12 DLC

N C 7 - Exist 2"C, 2 dlc

8 - 3"C, 10 DLC, 12 LOOP WIRES

9 - Exist 2"C, 2 dlc
RC 2 dlc
ADD 2 DLC

10 - 2"C, 10 DLC

11 - 2"C, 6 LOOP WIRES

12 - 3"C, 10 DLC, 12 LOOP WIRES

13 - Exist TWO-3"C, 2#14(fb), 2-9CSC, 1-12CSC, 28 dlc, 2#8(rm)
RC 8 dlc
ADD 12 DLC

N C 14 - Exist 2"C, 3 dlc

N C 15 - Exist 2"C, 2#8(rm)

N C 16 - Exist 3"C, 2#8(ltg), 1-12CSC

N C 17 - Exist 2"C, 2#14(fb), 1 dlc

N C 18 - Exist 2"C, 2#8(ltg)

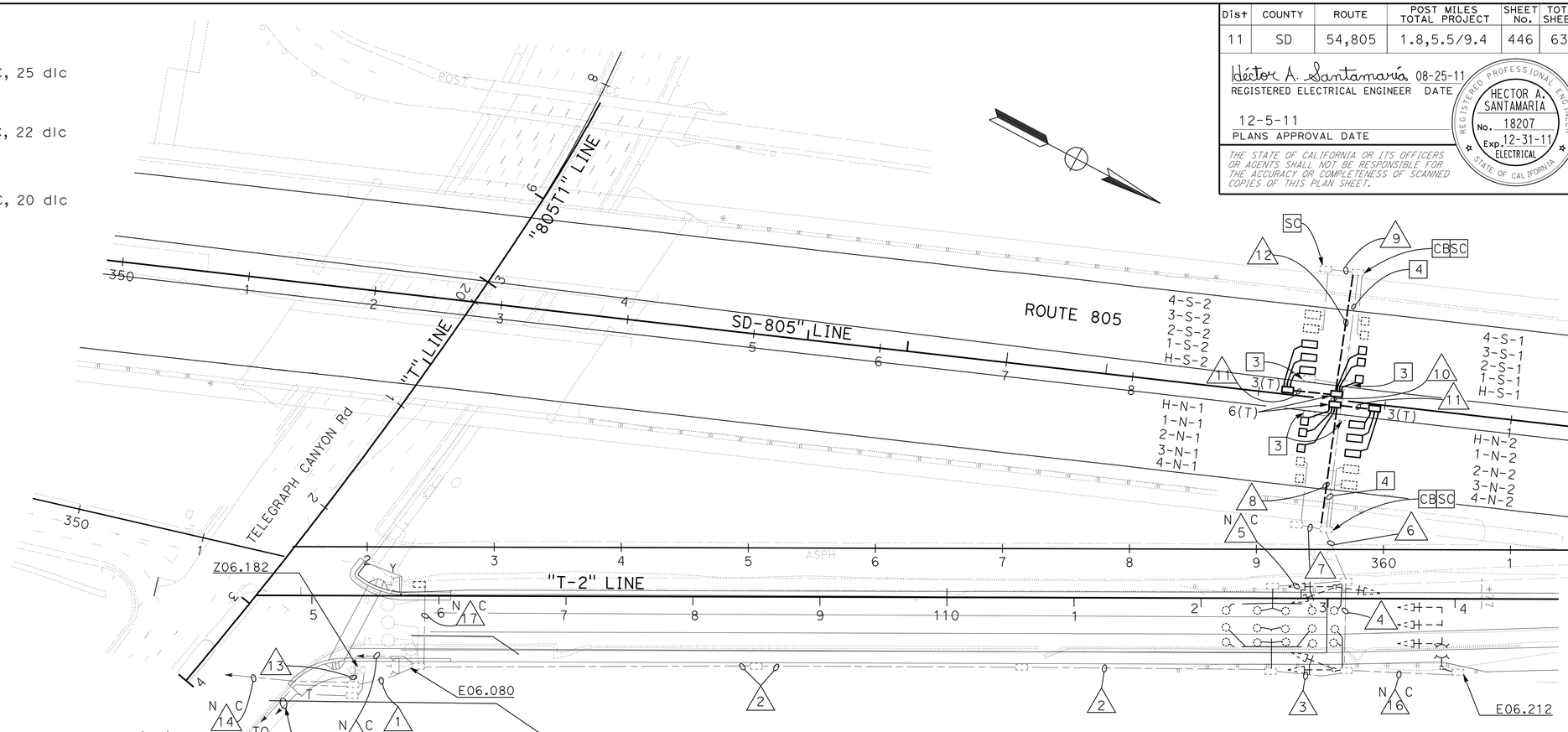

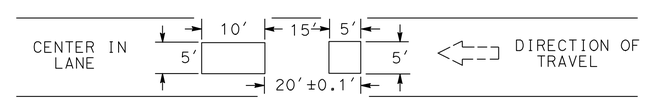

DETAIL "ML"

TYPICAL TYPE A LOOP PLACEMENT
NO SCLAE

R/W
LANE NUMBER
DIRECTION OF TRAVEL
LOOP NUMBER IN DIRECTION OF TRAVEL

2 - N - 1 (TYPICAL)

MAINLINE LOOP DETECTOR IDENTIFICATION

NOTES:

1 -FOR LOOP PLACEMENT SEE DETAIL "ML" ON TNIS SHEET.

2 -FOR COMPLETE RIGHT OF WAY AND ACCURATE ACCESS DATA, SEE RIGHT OF WAY RECORD MAPS AT DISTRICT OFFICE.

3 -RC EXISTING PULL BOX.

4 -AB EXISTING CONDUIT.

5 - RC EXISTING MAINLANE LOOP DETECTOR CABLES. INSTALL NEW MAINLANE LOOP DETECTOR CABLES AS SHOWN IN CONDUIT NOTES.

6 -NO SPLICING OF LOOP WIRE IN THE TRAFFIC PULL BOXES IN THE INSIDE SHOULDERS.

MODIFY RAMP METERING SYSTEM
(LOCATION 1)

APPROVED FOR ELECTRICAL WORK ONLY

SCALE: 1" = 50′

E-29

REVISED BY | DATE REVISED
HECTOR SANTAMARIA | ENRIQUE BERNAL
CALCULATED-DESIGNED BY | CHECKED BY
FUNCTIONAL SUPERVISOR | DALE WILSON

STATE OF CALIFORNIA - DEPARTMENT OF TRANSPORTATION
Caltrans TRAFFIC ELECTRICAL

LAST REVISION 08-29-11 | DATE PLOTTED => 12-DEC-2011 | TIME PLOTTED => 06:12

Dist	COUNTY	ROUTE	POST MILES TOTAL PROJECT	SHEET No.	TOTAL SHEETS
11	SD	54,805	1.8,5.5/9.4	447	635

Héctor A. Santamaría 08-25-11
REGISTERED ELECTRICAL ENGINEER DATE

12-5-11
PLANS APPROVAL DATE

REGISTERED PROFESSIONAL ENGINEER HECTOR A. SANTAMARIA No. 18207 Exp. 12-31-11 ELECTRICAL STATE OF CALIFORNIA

THE STATE OF CALIFORNIA OR ITS OFFICERS OR AGENTS SHALL NOT BE RESPONSIBLE FOR THE ACCURACY OR COMPLETENESS OF SCANNED COPIES OF THIS PLAN SHEET.

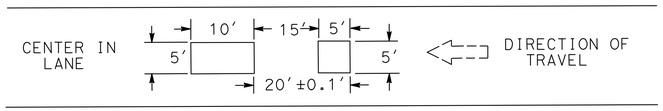

DETAIL "ML"

TYPICAL TYPE A LOOP PLACEMENT
NO SCLAE

NOTES (TSO):

1 -FOR LOOP PLACEMENT SEE DETAIL "ML" ON THIS SHEET.

2 -FOR COMPLETE RIGHT OF WAY AND ACCURATE ACCESS DATA, SEE RIGHT OF WAY RECORD MAPS AT DISTRICT OFFICE.

3 -RC EXISTING PULL BOX.

4 -AB EXISTING CONDUIT.

5 - RC EXISTING MAINLANE LOOP DETECTOR CABLES. INSTALL NEW MAINLANE LOOP DETECTOR CABLES AS SHOWN IN CONDUIT NOTES.

6 - NO SPLICING OF LOOP WIRE IN THE TRAFFIC PULL BOXES IN THE INSIDE SHOULDERS.

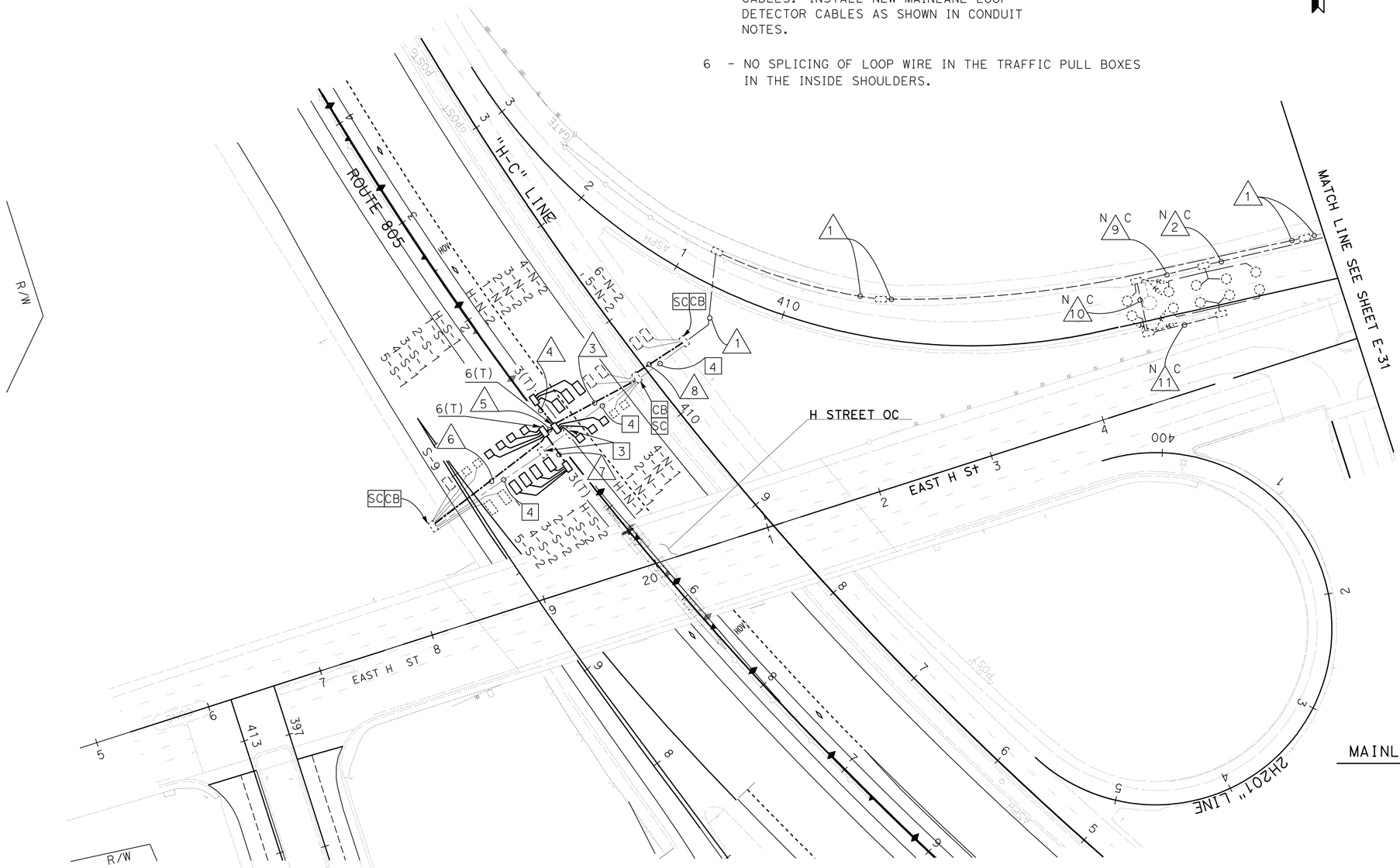

CONDUIT NOTES (TSO):

1 -Exist 3"C, 21 dlc
RC 21 dlc
ADD 25 DLC

N 2 C -Exist 3"C, 2-9CSC, 4 dlc

3 -3"C, 13 DLC, 12 LOOP WIRES

4 -2"C, 6 LOOP WIRES

5 -3"C, 13 DLC

6 -3"C, 13 DLC, 16 LOOP WIRES

7 -2"C, 8 LOOP WIRES

8 -3"C, 23 DLC

N 9 C -Exist 3"C, 2-9CSC, 3 dlc

N 10 C -Exist 2"C, 1-9CSC, 2 dlc

N 11 C -Exist 2"C, 1 dlc

LANE NUMBER OR HOV
DIRECTION OF TRAVEL
LOOP NUMBER IN DIRECTION OF TRAVEL

2 - N - 1 (TYPICAL)

MAINLANE LOOP DETECTOR IDENTIFICATION

MODIFY RAMP METERING SYSTEM
(LOCATION 2)

APPROVED FOR ELECTRICAL WORK ONLY

SCALE: 1" = 50′

E-30

STATE OF CALIFORNIA - DEPARTMENT OF TRANSPORTATION
Caltrans® TRAFFIC ELECTRICAL

FUNCTIONAL SUPERVISOR: DALE WILSON
CALCULATED-DESIGNED BY: HECTOR SANTAMARIA
CHECKED BY: ENRIQUE BERNAL
REVISED BY
DATE REVISED

LAST REVISION 08-29-11
DATE PLOTTED => 12-DEC-2011
TIME PLOTTED => 06:12

Dist	COUNTY	ROUTE	POST MILES TOTAL PROJECT	SHEET No.	TOTAL SHEETS
11	SD	54,805	1.8,5.5/9.4	448	635

Héctor A. Santamaría 08-25-11
REGISTERED ELECTRICAL ENGINEER DATE

12-5-11
PLANS APPROVAL DATE

REGISTERED PROFESSIONAL ENGINEER
HECTOR A. SANTAMARIA
No. 18207
Exp. 12-31-11
ELECTRICAL
STATE OF CALIFORNIA

THE STATE OF CALIFORNIA OR ITS OFFICERS OR AGENTS SHALL NOT BE RESPONSIBLE FOR THE ACCURACY OR COMPLETENESS OF SCANNED COPIES OF THIS PLAN SHEET.

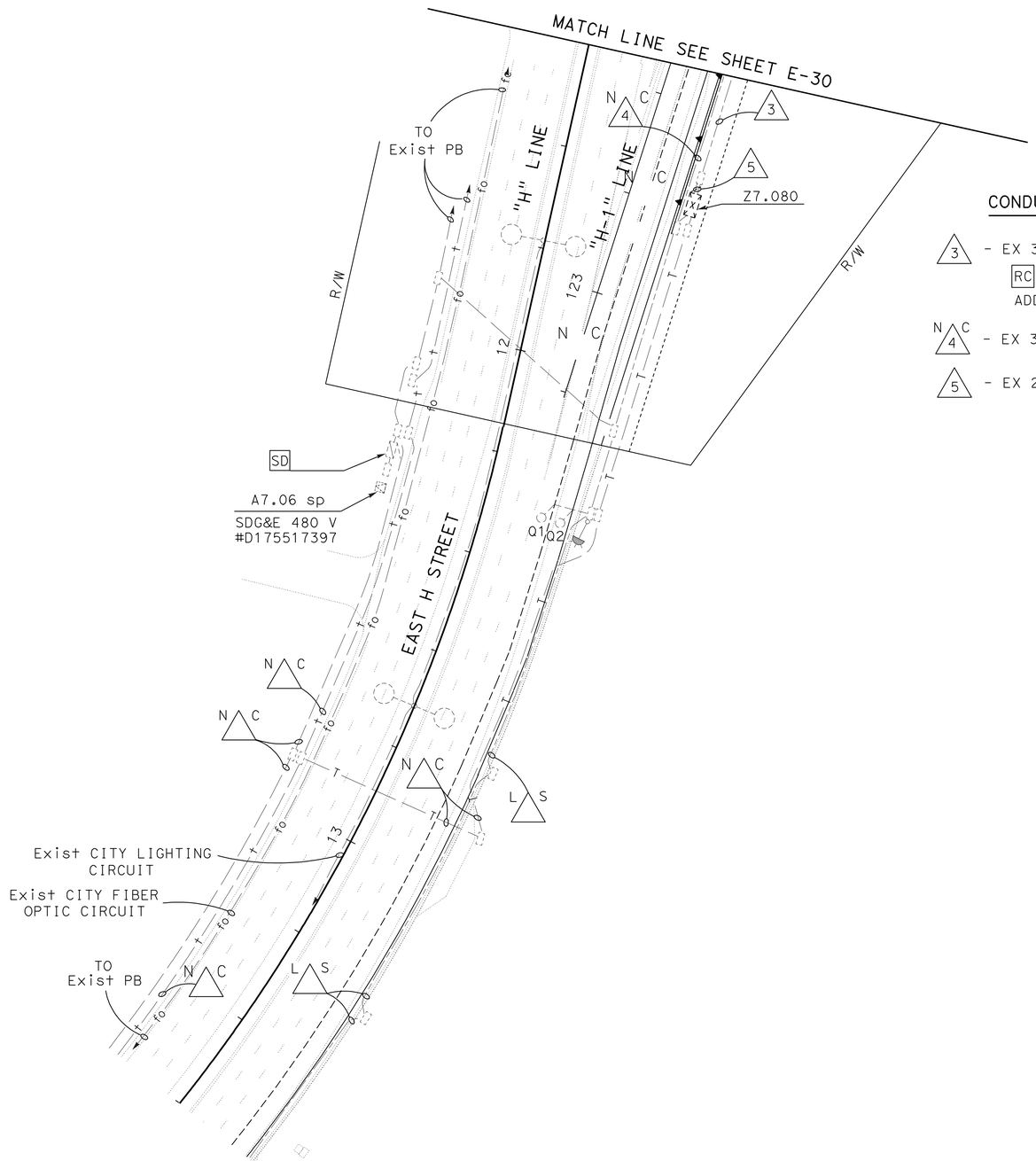

CONDUIT NOTES (TSO):

3 - EX 3"C, 21 dlc.
RC 21 dlc.
ADD 20 DLC.

N 4 C - EX 3"C, 4 DLC, 2 9CSC.

5 - EX 2-3"C, 21 dlc.
RC 21 dlc.
ADD 25 DLC.

Z7.080
ROUTE 805 NB ON RAMP
FROM WB EAST H ST

MODIFY RAMP METERING SYSTEM (LOCATION 2)

APPROVED FOR ELECTRICAL WORK ONLY

SCALE: 1" = 50'

E-31

STATE OF CALIFORNIA - DEPARTMENT OF TRANSPORTATION
Caltrans® TRAFFIC ELECTRICAL

FUNCTIONAL SUPERVISOR: DALE WILSON
CALCULATED-DESIGNED BY: HECTOR SANTAMARIA
CHECKED BY: ENRIQUE BERNAL
REVISED BY
DATE REVISED

LAST REVISION 09-26-11
DATE PLOTTED => 12-DEC-2011
TIME PLOTTED => 12:32

Dist	COUNTY	ROUTE	POST MILES TOTAL PROJECT	SHEET No.	TOTAL SHEETS
11	SD	54,805	1.8,5.5/9.4	449	635

Héctor A. Santamaría 08-25-11
REGISTERED ELECTRICAL ENGINEER DATE

12-5-11
PLANS APPROVAL DATE

REGISTERED PROFESSIONAL ENGINEER HECTOR A. SANTAMARIA No. 18207 Exp. 12-31-11 ELECTRICAL STATE OF CALIFORNIA

THE STATE OF CALIFORNIA OR ITS OFFICERS OR AGENTS SHALL NOT BE RESPONSIBLE FOR THE ACCURACY OR COMPLETENESS OF SCANNED COPIES OF THIS PLAN SHEET.

CONDUIT NOTES:

1. -Exist 2-3"C, 2#8(rm), 2#14(fb), 2-9CSC, 1-12CSC, 17 dlc
   RC 4 dlc
   ADD 6 DLC
2. -Exist 4"C, 2#8(ltg), 3#14(peu), 2#14(fb), 2-9CSC, 14 dlc
   RC 4 dlc
   ADD 6 DLC
3. N C -Exist 2"C, 2#14(fb), 1 dlc
4. -Exist 3"C, 2#8(ltg), 2-9CSC, 12 dlc
   RC 4 dlc
   ADD 6 DLC
5. -Exist 4"C, 2#8(ltg), 2-9CSC, 11 dlc
   RC 4 dlc
   ADD 6 DLC
6. -Exist 4"C, 8 dlc
   RC 4 dlc
   ADD 6 DLC
7. N C -Exist 2"C, 1 dlc
8. -3"C, 12 LOOP WIRES
9. -2"C, 6 LOOP WIRES
10. N C -Exist 2-2"C, 2#8(rm), 2#8(ltg), 3#14(peu); 1 sic
11. N C -Exist 2"C, 3 dlc
12. N C -Exist 2"C, 2 dlc
13. N C -Exist 2"C, 1-9CSC, 2 dlc

NOTES:

1. -FOR LOOP PLACEMENT SEE DETAIL "ML" ON TNIS SHEET.
2. -FOR COMPLETE RIGHT OF WAY AND ACCURATE ACCESS DATA, SEE RIGHT OF WAY RECORD MAPS AT DISTRICT OFFICE.
3. -RC EXISTING PULL BOX.
4. -AB EXISTING CONDUIT.
5. - RC EXISTING MAINLANE LOOP DETECTOR CABLES. INSTALL NEW MAINLANE LOOP DETECTOR CABLES AS SHOWN IN CONDUIT NOTES.
6. - NO SPLICING OF LOOP WIRES IN THE TRAFFIC PULL BOXES IN THE INSIDE SHOULDERS.

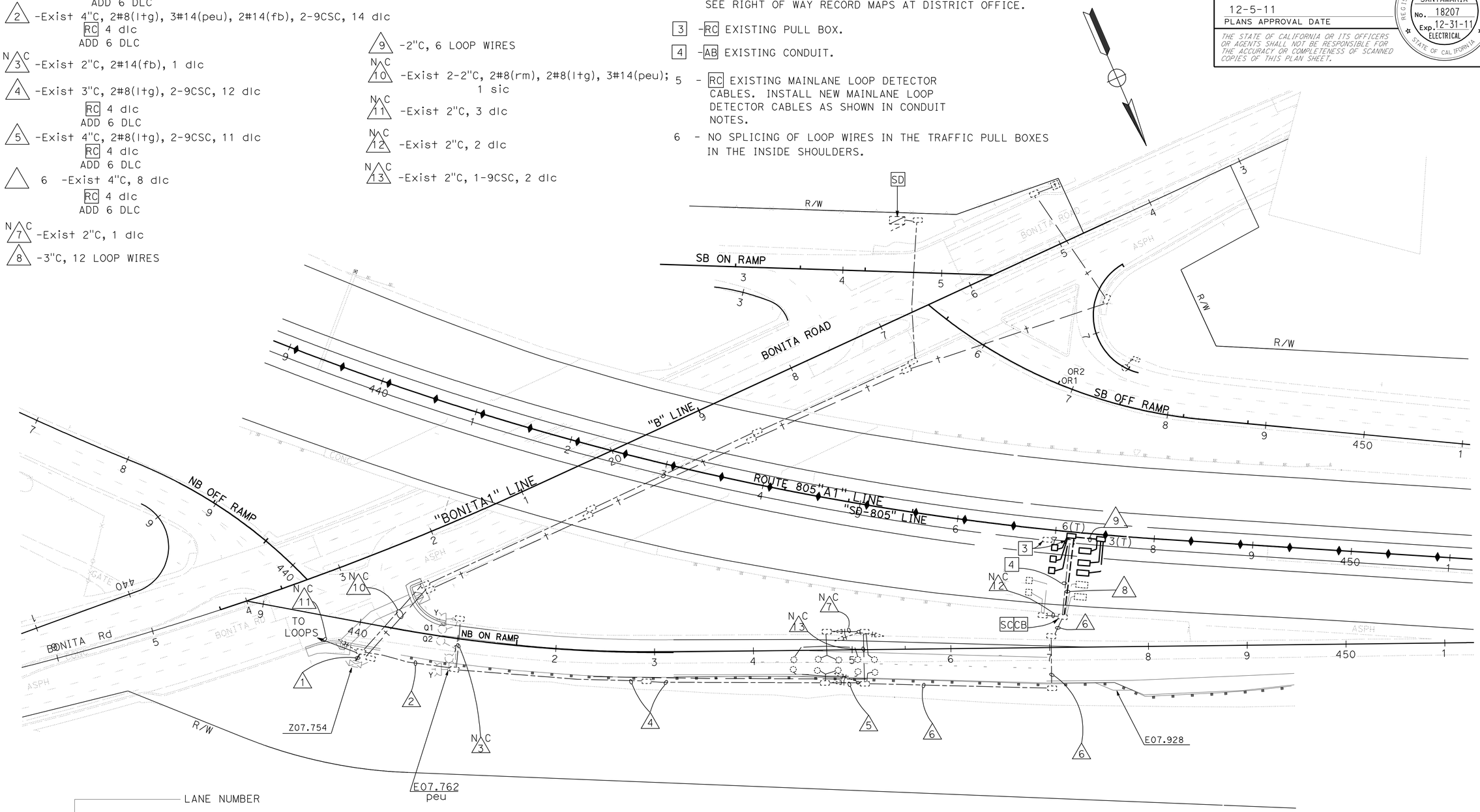

LANE NUMBER
DIRECTION OF TRAVEL
LOOP NUMBER IN DIRECTION OF TRAVEL

2 - N - 1 (TYPICAL)

MAINLINE LOOP DETECTOR IDENTIFICATION

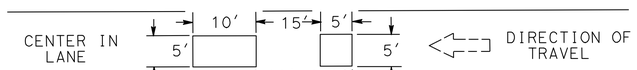

DETAIL "ML"

TYPICAL TYPE A LOOP PLACEMENT
NO SCLAE

MODIFY RAMP METERING SYSTEM
(LOCATION 3)

SCALE: 1" = 50'

E-32

APPROVED FOR ELECTRICAL WORK ONLY

STATE OF CALIFORNIA - DEPARTMENT OF TRANSPORTATION
Caltrans® TRAFFIC ELECTRICAL

FUNCTIONAL SUPERVISOR: DALE WILSON
CALCULATED-DESIGNED BY: HECTOR SANTAMARIA
CHECKED BY: ENRIQUE BERNAL
REVISED BY
DATE REVISED

LAST REVISION 08-29-11
DATE PLOTTED => 12-DEC-2011
TIME PLOTTED => 12:32

Dist	COUNTY	ROUTE	POST MILES TOTAL PROJECT	SHEET No.	TOTAL SHEETS
11	SD	54,805	1.8,5.5/9.4	450	635

Héctor A. Santamaría 08-25-11
REGISTERED ELECTRICAL ENGINEER DATE

12-5-11
PLANS APPROVAL DATE

REGISTERED PROFESSIONAL ENGINEER HECTOR A. SANTAMARIA No. 18207 Exp. 12-31-11 ELECTRICAL STATE OF CALIFORNIA

THE STATE OF CALIFORNIA OR ITS OFFICERS OR AGENTS SHALL NOT BE RESPONSIBLE FOR THE ACCURACY OR COMPLETENESS OF SCANNED COPIES OF THIS PLAN SHEET.

NOTES:

1 - FOR LOOP PLACEMENT SEE DETAIL "ML" ON TNIS SHEET.

2 - FOR COMPLETE RIGHT OF WAY AND ACCURATE ACCESS DATA, SEE RIGHT OF WAY RECORD MAPS AT DISTRICT OFFICE.

3 - RC EXISTING PULL BOX.

4 - AB EXISTING CONDUIT.

5 - RC EXISTING MAINLANE LOOP DETECTOR CABLES. INSTALL NEW MAINLANE LOOP DETECTOR CABLES AS SHOWN IN CONDUIT NOTES.

6 - NO SPLICING OF LOOP WIRES IN THE TRAFFIC PULL BOXES IN THE INSIDE SHOULDERS.

LANE NUMBER OR HOV
DIRECTION OF TRAVEL
LOOP NUMBER IN DIRECTION OF TRAVEL

2 - N - 1 (TYPICAL)

MAINLANE LOOP DETECTOR IDENTIFICATION

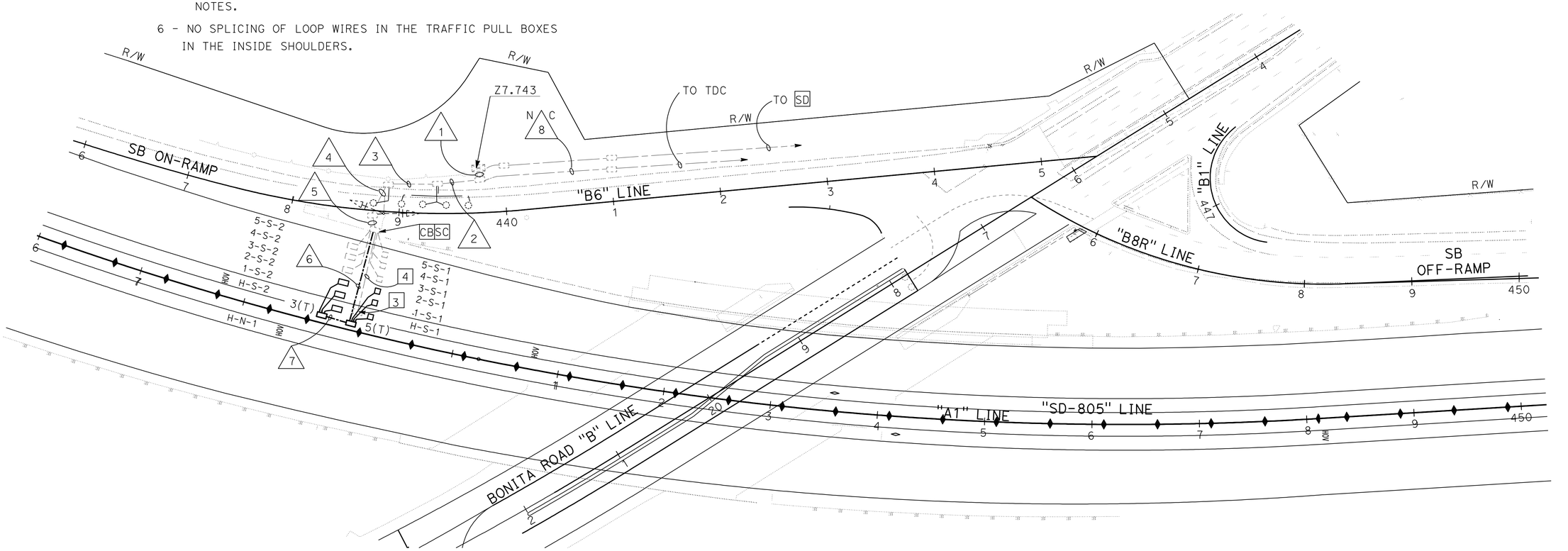

CONDUIT NOTES:

1. -Exist 2-3"C, 1-9csc, 2#10(fb), 2#6(rm), 17 dlc
   RC 4 dlc
   ADD 6 DLC
2. -Exist 3"C, 1-9CSC, 12 dlc
   RC 4 dlc
   ADD 6 DLC
3. -Exist 3"C, 1-9CSC, 11 dlc
   RC 4 dlc
   ADD 6 DLC
4. -Exist 3"C, 1-9CSC, 10 dlc
   RC 4 dlc
   ADD 6 DLC
5. -Exist 2"C, 10 dlc
   RC 4 dlc
   ADD 6 DLC
6. -3"C, 12 LOOP WIRES
7. -2"C, 6 LOOP WIRES
8. -Exist 2"C, 2#10(fb), 2#6(rm), 5 dlc

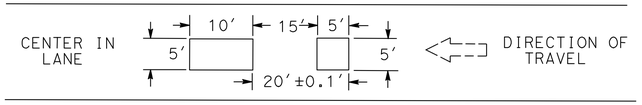

DETAIL "ML"

TYPICAL TYPE A LOOP PLACEMENT
NO SCLAE

R/W

MODIFY RAMP METERING SYSTEM

(LOCATION 4)

APPROVED FOR ELECTRICAL WORK ONLY

SCALE: 1" = 50'

E-33

STATE OF CALIFORNIA - DEPARTMENT OF TRANSPORTATION
Caltrans® TRAFFIC ELECTRICAL

FUNCTIONAL SUPERVISOR: DALE WILSON
CALCULATED-DESIGNED BY: HECTOR SANTAMARIA
CHECKED BY: ENRIQUE BERNAL
REVISED BY
DATE REVISED

LAST REVISION 08-29-11
DATE PLOTTED => 12-DEC-2011
TIME PLOTTED => 07:30

Dist	COUNTY	ROUTE	POST MILES TOTAL PROJECT	SHEET No.	TOTAL SHEETS
11	SD	54,805	1.8,5.5/9.4	451	635

Héctor A. Santamaría 08-25-11
REGISTERED ELECTRICAL ENGINEER DATE

12-5-11
PLANS APPROVAL DATE

REGISTERED PROFESSIONAL ENGINEER HECTOR A. SANTAMARIA No. 18207 Exp. 12-31-11 ELECTRICAL STATE OF CALIFORNIA

THE STATE OF CALIFORNIA OR ITS OFFICERS OR AGENTS SHALL NOT BE RESPONSIBLE FOR THE ACCURACY OR COMPLETENESS OF SCANNED COPIES OF THIS PLAN SHEET.

CONDUIT NOTES:

1 - Exist 2-4"C, 22 dlc, 2-9CSC, 1 sic
RC 18 dlc. ADD 21 DLC

2 - Exist 3"C, 18 dlc, 1 sic
RC 18 dlc. ADD 21 DLC, 1 OCC

3 - Exist 2"C, 12 dlc
RC 12 dlc. ADD 14 DLC

4 - 3"C, 14 DLC

5 - Exist 2"C, 5 dlc
RC 5 dlc. ADD 11 DLC

6 - Exist 2"C, 8 dlc
RC 8 dlc. ADD 12 LOOP WIRES

7 - 2"C, 12 LOOP WIRES

8 - 2"C, 6 LOOP WIRES

9 - Exist 2"C, 2 dlc
RC 2 dlc. ADD 2 DLC

10 - Exist 2"C, 6 dlc, 1 sic
RC 6 dlc. ADD 7 DLC, 1 OCC (CCTV)

11 - Exist 3"C, 6 dlc
RC 6 dlc. ADD 4 DLC, 6 LOOP WIRES

12 - 3"C, 4 DLC, 6 LOOP WIRES

13 - 2"C, 4 DLC

14 - Exist 2"C, 4 dlc
RC 4 dlc. ADD 4 DLC

15 - Exist 2"C, 1 dlc
RC 1 dlc. ADD 1 DLC

N C 16 - Exist 2"C, 1-9CSC, 2 dlc

N C 17 - Exist 2"C, 1 dlc

N C 18 - Exist 1½"C, 2#6(rm)

N C 19 - Exist 1"C, 2#8(ltg)

20 - Exist 2"C, 1 sic
ADD 1 OCC (CCTV)

NOTES:

1 - RC Exist LOOPS AND REPLACE AS SHOWN. FOR LOOP PLACEMENT SEE DETAIL "A" ON THIS SHEET.

2 - RC EXISTING MAINLANE LOOP DETECTOR CABLES. INSTALL NEW MAINLANE LOOP DETECTOR CABLES AS SHOWN IN CONDUIT NOTES.

3 - EXISTING RAMP METERING SYSTEM PARTIALLY SHOWN.

4 - RC EXISTING PULL BOX.

5 - FOR CONTINUATION SEE CCTV SYSTEM (LOCATION 3) ON SHEET E-14.

6 - 5'X10' TYPE A DETECTOR LOOP CENTER IN LANE.

7 - FOR CONTINUATION SEE CCTV SYSTEM (LOCATION 3) ON SHEET E-15.

8 - NO SPLICING OF LOOP WIRES IN TRAFFIC PULL BOXES IN THE INSIDE SHOULDERS.

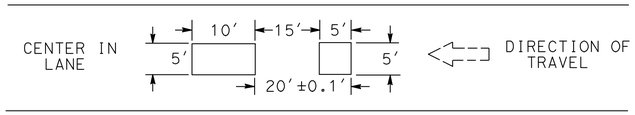

DETAIL "A"

TYPICAL TYPE A LOOP PLACEMENT
NO SCLAE

LANE NUMBER OR HOV
DIRECTION OF TRAVEL
LOOP NUMBER IN DIRECTION OF TRAVEL

2 - N - 1 (TYPICAL)

MAINLANE LOOP DETECTOR IDENTIFICATION

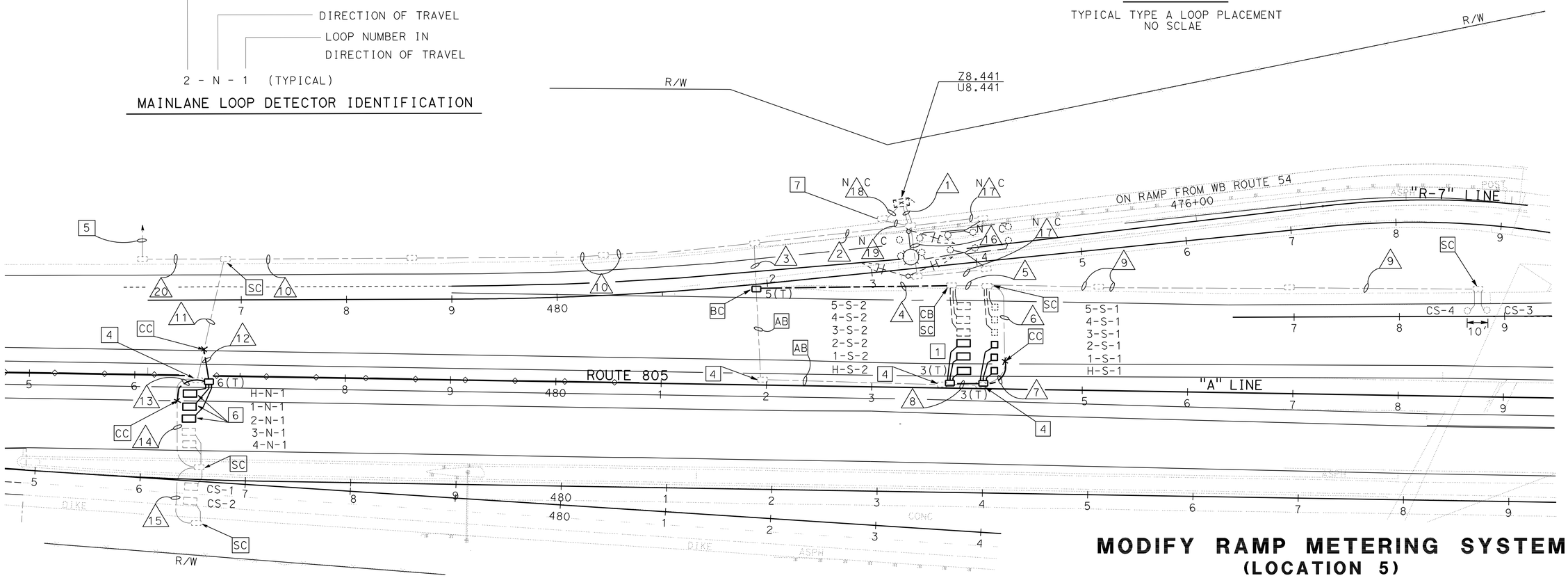

APPROVED FOR ELECTRICAL WORK ONLY

SCALE: 1" = 50'

MODIFY RAMP METERING SYSTEM
(LOCATION 5)

E-34

STATE OF CALIFORNIA - DEPARTMENT OF TRANSPORTATION
Caltrans® TRAFFIC ELECTRICAL

FUNCTIONAL SUPERVISOR: DALE WILSON
CALCULATED-DESIGNED BY: HECTOR SANTAMARIA
CHECKED BY: ENRIQUE BERNAL
REVISED BY / DATE REVISED

LAST REVISION 08-29-11
DATE PLOTTED => 12-DEC-2011
TIME PLOTTED => 07:30

Dist	COUNTY	ROUTE	POST MILES TOTAL PROJECT	SHEET No.	TOTAL SHEETS
11	SD	54,805	1.8,5.5/9.4	452	635

Héctor A. Santamaría 08-25-11
REGISTERED ELECTRICAL ENGINEER DATE

12-5-11
PLANS APPROVAL DATE

REGISTERED PROFESSIONAL ENGINEER HECTOR A. SANTAMARÍA No. 18207 Exp. 12-31-11 ELECTRICAL STATE OF CALIFORNIA

THE STATE OF CALIFORNIA OR ITS OFFICERS OR AGENTS SHALL NOT BE RESPONSIBLE FOR THE ACCURACY OR COMPLETENESS OF SCANNED COPIES OF THIS PLAN SHEET.

CONDUIT NOTES:

△1 -Exist 2-3"C, 1-12CSC, 2#10(fb), 15 dlc
RC 4 dlc
ADD 8 DLC

△2 -Exist 2"C, 9 dlc
RC 4 dlc
ADD 8 DLC
1 OCC (CCTV)

△3 -Exist 2"C, 8 dlc
RC 4 dlc
ADD 8 DLC
1 OCC (CCTV)

△4 -Exist 2"C, 4 dlc
RC 4 dlc
ADD 8 DLC

△5 -2"C, 8 DLC

N C △6 -Exist 2"C, 1 sic

N C △7 -Exist 2"C, 2#8(ltg), 2#6(rm), 3#14(peu)

N C △8 -Exist 2"C, 2#8(ltg), 2#8(s), 2#8(tms), 3#14(peu)
2#6(rm), 2#14(icc), 2#14(tdc)

△9 -2"C, 2 DLC

△10 -2"C, 1 OCC(CCTV)

N C △11 -Exist 2"C, 4 dlc

N C △12 -Exist 2"C, 2 dlc

△13 -Exist 2"C, 1 sic
ADD 1 OCC (CCTV)

△14 -Exist 2"C, 9 dlc, 2#8(ltg),
3#14(peu), 1-12CSC
RC 4 dlc
ADD 8 DLC
1 OCC (CCTV)

NOTES:

1 -FOR LOOP PLACEMENT SEE DETAIL "ML" ON TNIS SHEET.

2 -FOR CONTINUATION OF CIRCUIT SEE CCTV SYSTEM(LOCATION 4) ON SHEET E-16

3 -RC EXISTING PULL BOX.

4 -AB EXISTING CONDUIT.

5 -FOR COMPLETE RIGHT OF WAY AND ACCURATE ACCESS DATA, SEE RIGHT OF WAY RECORD MAPS AT DISTRICT OFFICE.

6 - RC EXISTING MAINLANE LOOP DETECTOR CABLES. INSTALL NEW MAINLANE LOOP DETECTOR CABLES AS SHOWN IN CONDUIT NOTES.

7 -RC Exist TDC AND REPLACE IN PLACE WITH MODIFIED TYPE G TDC (E-47).

8 -NO SPLICING OF LOOP WIRES IN THE TRAFFIC PULL BOXES IN THE INSIDE SHOULDERS.

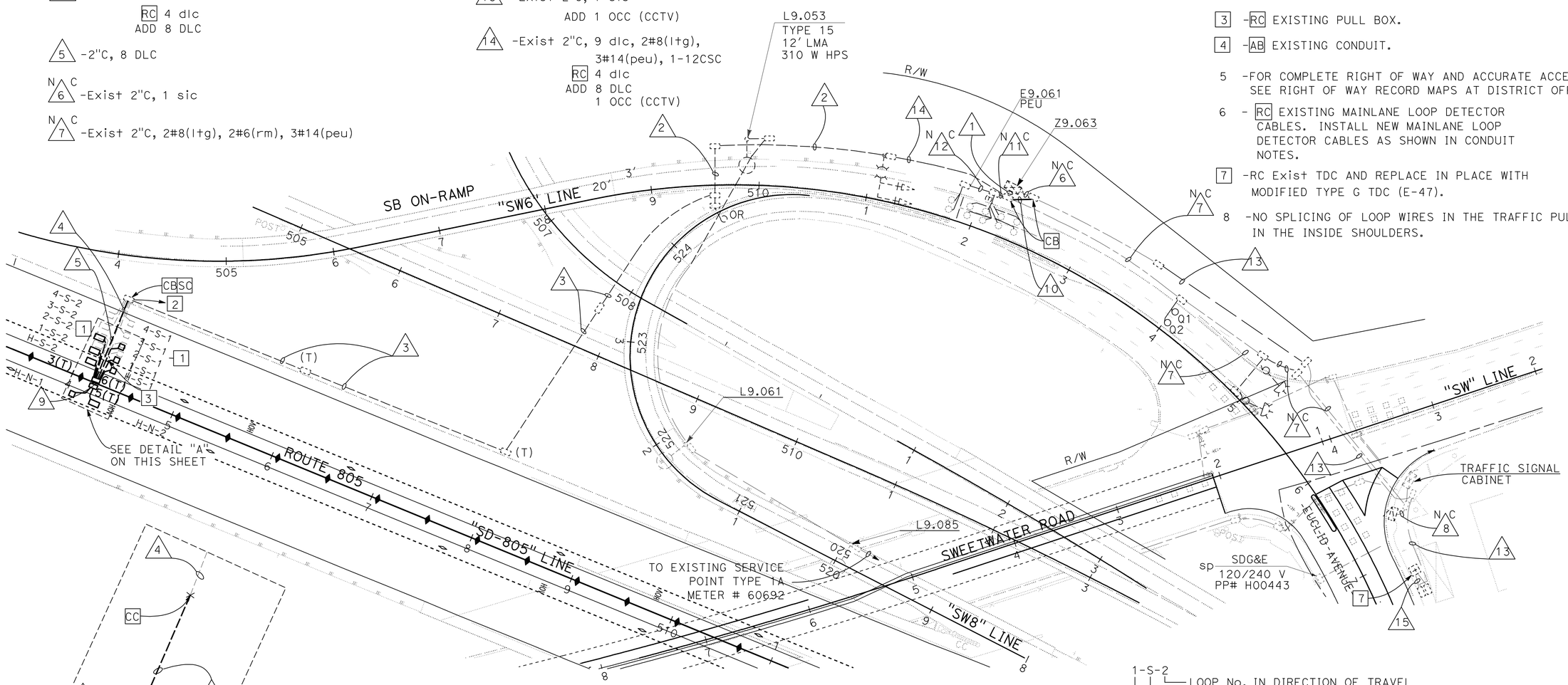

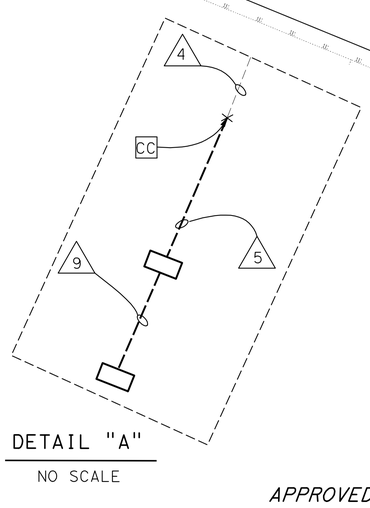

DETAIL "A"
NO SCALE

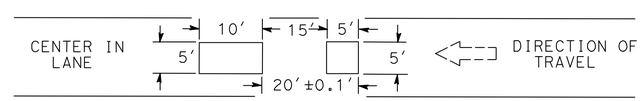

DETAIL "ML"
TYPICAL TYPE A LOOP PLACEMENT
NO SCALE

1-S-2
LOOP No. IN DIRECTION OF TRAVEL
DIRECTION OF TRAVEL
LANE NUMBER OR HOV

LOOP DETECTOR IDENTIFICATION (Typ)

MODIFY RAMP METERING SYSTEM
(LOCATION 6)

APPROVED FOR ELECTRICAL WORK ONLY

SCALE: 1" = 50'

E-35

STATE OF CALIFORNIA - DEPARTMENT OF TRANSPORTATION
Caltrans TRAFFIC ELECTRICAL

FUNCTIONAL SUPERVISOR: DALE WILSON
CALCULATED-DESIGNED BY: ENRIQUE BERNAL
CHECKED BY: HECTOR SANTAMARIA
REVISED BY
DATE REVISED

LAST REVISION 08-29-11 | DATE PLOTTED => 12-DEC-2011 | TIME PLOTTED => 07:30

Dist	COUNTY	ROUTE	POST MILES TOTAL PROJECT	SHEET No.	TOTAL SHEETS
11	SD	54,805	1.8,5.5/9.4	453	635

Héctor A. Santamaría 08-25-11
REGISTERED ELECTRICAL ENGINEER DATE

12-5-11
PLANS APPROVAL DATE

REGISTERED PROFESSIONAL ENGINEER HECTOR A. SANTAMARIA No. 18207 Exp. 12-31-11 ELECTRICAL STATE OF CALIFORNIA

THE STATE OF CALIFORNIA OR ITS OFFICERS OR AGENTS SHALL NOT BE RESPONSIBLE FOR THE ACCURACY OR COMPLETENESS OF SCANNED COPIES OF THIS PLAN SHEET.

INDUCTIVE LOOP DETECTOR

ROUTE	PM STA	STATIONS	FACILITIES	DIRECTIONS	LOCATION OF INDUCTIVE LOOP DETECTORS (N) CENTERED IN LANE										INDUCTIVE LOOP DETECTOR (EA)
					MAIN LANE NB LOOPS					MAIN LANE SB LOOPS					
					#1	#2	#3	#4	#5	#1	#2	#3	#4	#5	
805	6.142	359+60 NB/SB MAIN LANE "DETAIL A"	RAMP METERING Z6.142	NB	2	2	2	2							8
805	7.080	411+30 NB/SB MAIN LANE SEE "DETAIL A"	RAMP METERING Z7.080	NB	2	2	2	2							8
805	7.743	439+30 SB MAIN LANE SEE "DETAIL A"	RAMP METERING Z7.743	SB						2	2	2	2	2	10
805	7.754	447+00 NB MAIN LANE SEE "DETAIL A"	RAMP METERING Z7.754	NB	2	2	2	2							8
805	8.441	482+70 NB/SB MAIN LANE SEE "DETAIL A"	RAMP METERING Z8.441	NB/SB						2	2	2	2	2	10
805	9.065	504+00 SB MAIN LANE SEE "DETAIL A"	RAMP METERING Z9.065	SB						2	2	2	2		8
805	9.239	519+50 NB/SB MAIN LANE SEE "DETAIL A"	INCIDENT DETECTION D9.239	NB/SB						2	2	2	2		8
														TOTAL=	60

(N) = NOT A SEPARATE PAY ITEM, FOR INFORMATION ONLY.

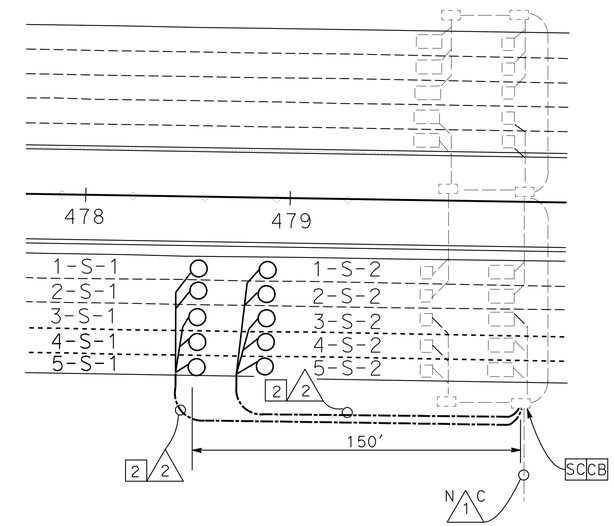

DETAIL "A"
MAIN LANE LOOP PLACEMENT
(TYPICAL)

CONDUIT NOTES:

N C 1 - Exist 2"C, 20 dlc. (TYPICAL). SEE TABLE

2 - 2"C, 10 LOOP WIRES. (TYPICAL). SEE TABLE

NOTES:

1 - FOR LOOP PLACEMENT SEE DETAIL "R" ON THIS SHEET

2 - TEMPORARY CONDUIT SHALL BE TRENCH ONE FOOT IN DEPTH. NO CONCRETE BACKFILL REQUIRED.

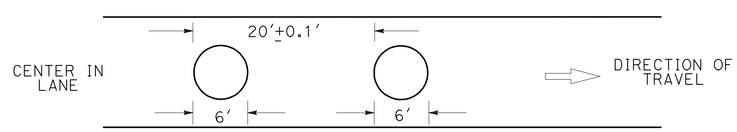

DETAIL "R"
TYPICAL

APPROVED FOR ELECTRICAL WORK ONLY

NO SCALE

INDUCTIVE LOOP DETECTOR
(TEMPORARY)

E-36

STATE OF CALIFORNIA - DEPARTMENT OF TRANSPORTATION
Caltrans® TRAFFIC ELECTRICAL

FUNCTIONAL SUPERVISOR: DALE WILSON
CALCULATED-DESIGNED BY: HECTOR SANTAMARIA
CHECKED BY: ENRIQUE BERNAL
REVISED BY
DATE REVISED

LAST REVISION 09-26-11 | DATE PLOTTED => 12-DEC-2011 | TIME PLOTTED => 07:31

Dist	COUNTY	ROUTE	POST MILES TOTAL PROJECT	SHEET No.	TOTAL SHEETS
11	SD	54,805	1.8,5.5/9.4	454	635

Héctor A. Santamaría 08-25-11
REGISTERED ELECTRICAL ENGINEER DATE

12-5-11
PLANS APPROVAL DATE

REGISTERED PROFESSIONAL ENGINEER HECTOR A. SANTAMARIA No. 18207 Exp. 12-31-11 ELECTRICAL STATE OF CALIFORNIA

THE STATE OF CALIFORNIA OR ITS OFFICERS OR AGENTS SHALL NOT BE RESPONSIBLE FOR THE ACCURACY OR COMPLETENESS OF SCANNED COPIES OF THIS PLAN SHEET.

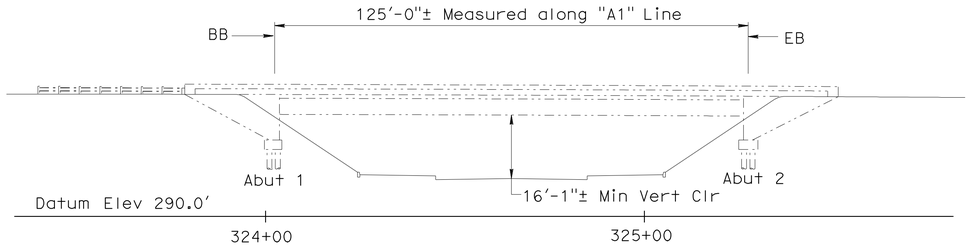

ELEVATION
1"=20'

NOTES:

1. -REMOVE Exist LIGHT FIXTURE AND REPLACE WITH A JUNCTION BOX AND NEW LIGHT FIXTURE.
2. -THE MOUNTING PLATE FROM THE FIXTURE SHALL BE SECURED TO THE BRIDGE SOFFIT.
3. -FOR CIRCUIT CONTINUITY SEE LIGHTING AND SIGN ILLUMINATION.
4. -USE ONE HOLE PIPE STRAP FOR CONDUCT TO SECURE TO BRIDGE.

CONDUIT NOTES:

1. -2"C, (SEE SIGN ILLUMINATION PLANS)
2. -1"C, 2#10(LTG)
3. -Exist 1"C, 2#10(LTG)

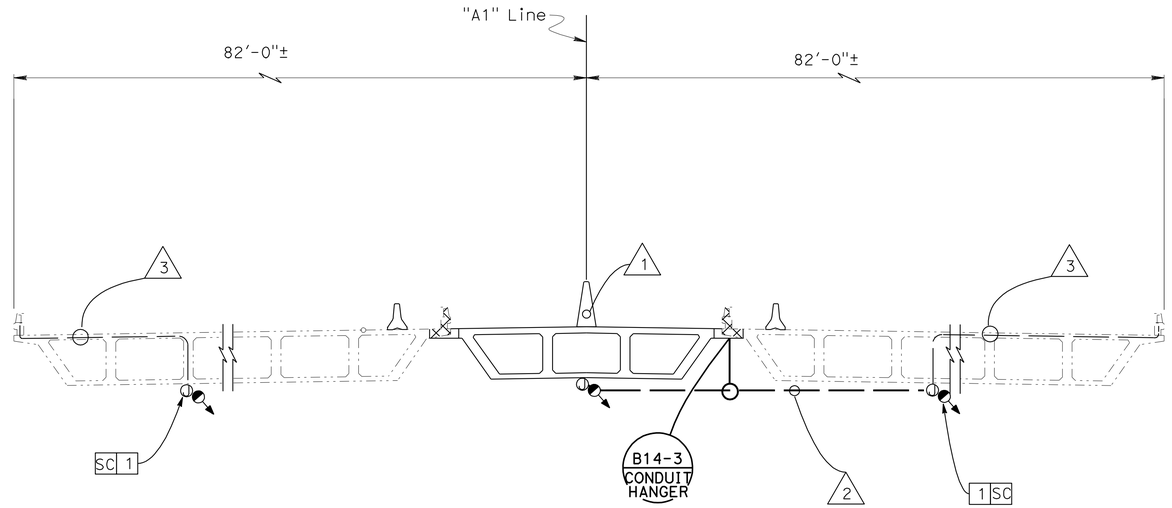

TYPICAL SECTION
NO SCALE

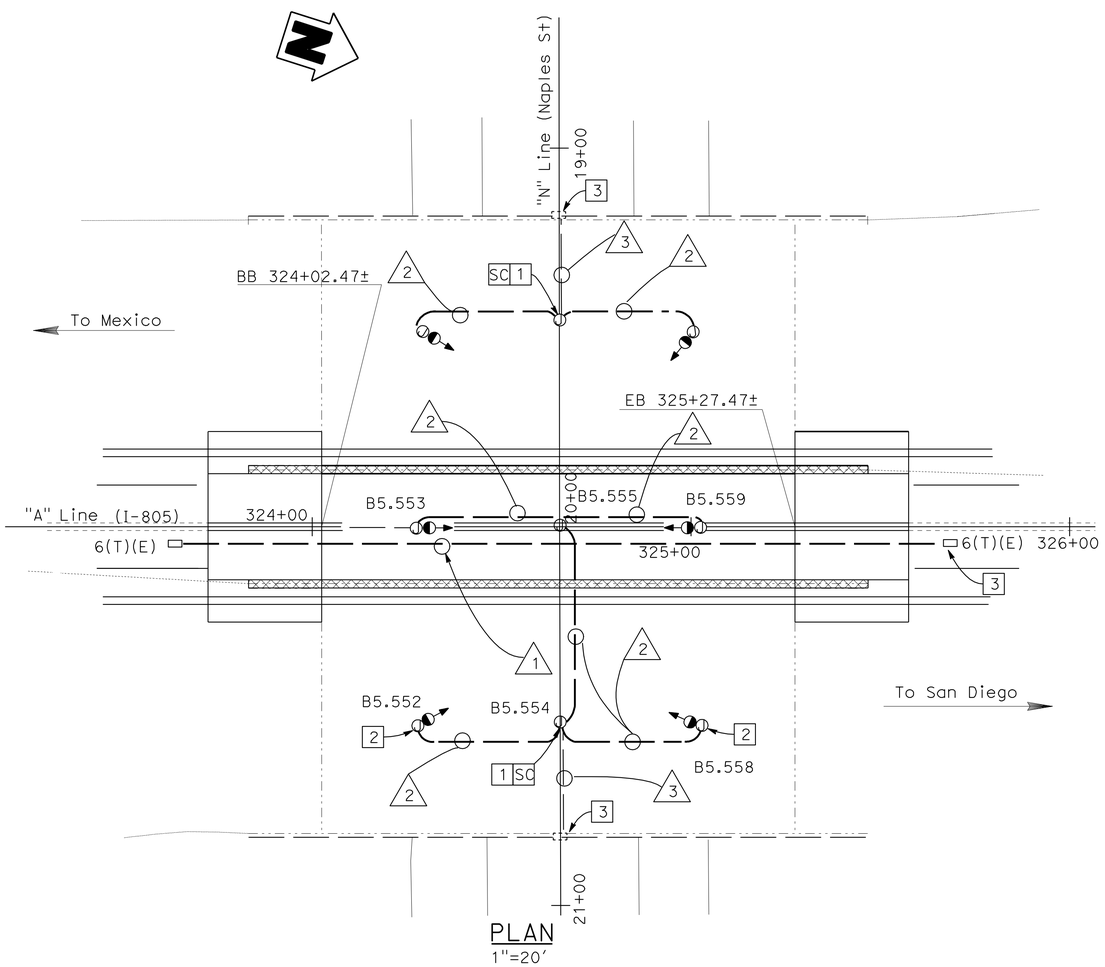

PLAN
1"=20'

LEGEND:

- ——— -NEW STRUCTURE
- - - - - -EXISTING STRUCTURE
- -200 W HPS SOFFIT FIXTURE. (TOTAL=6)
- (J) -JUNCTION BOX (TYPE 4 NEMA) (TOTAL=9)

BRIDGE No. 57-0634
NAPLES STREET UC

LIGHTING CITY STREET BRIDGE ELECTRICAL

E-37

APPROVED FOR ELECTRICAL WORK ONLY

SCALE AS NOTED

STATE OF CALIFORNIA - DEPARTMENT OF TRANSPORTATION
Caltrans® TRAFFIC ELECTRICAL

FUNCTIONAL SUPERVISOR: DALE WILSON
CALCULATED-DESIGNED BY: HECTOR SANTAMARIA
CHECKED BY: ENRIQUE BERNAL
REVISED BY / DATE REVISED

LAST REVISION 09-26-11 | DATE PLOTTED => 12-DEC-2011 | TIME PLOTTED => 07:31

Dist	COUNTY	ROUTE	POST MILES TOTAL PROJECT	SHEET No.	TOTAL SHEETS
11	SD	54,805	1.8,5.5/9.4	455	635

Héctor A. Santamaría 08-25-11
REGISTERED ELECTRICAL ENGINEER DATE

12-5-11
PLANS APPROVAL DATE

REGISTERED PROFESSIONAL ENGINEER HECTOR A. SANTAMARIA No. 18207 Exp. 12-31-11 ELECTRICAL STATE OF CALIFORNIA

THE STATE OF CALIFORNIA OR ITS OFFICERS OR AGENTS SHALL NOT BE RESPONSIBLE FOR THE ACCURACY OR COMPLETENESS OF SCANNED COPIES OF THIS PLAN SHEET.

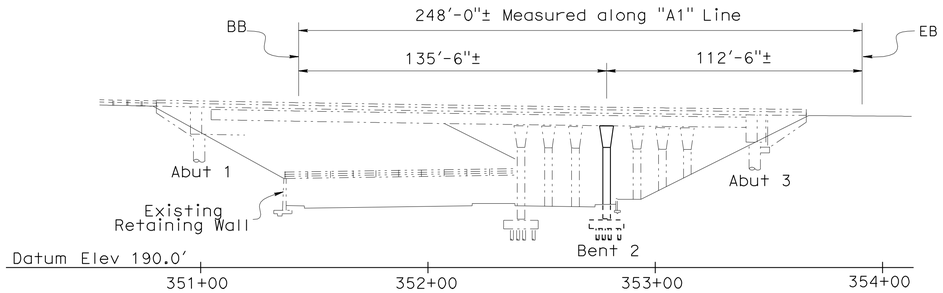

ELEVATION

NO SCALE

NOTES:

1 -REMOVE Exist LIGHT FIXTURE AND REPLACE WITH A JUNCTION BOX AND NEW LIGHT FIXTURE.

2 -THE MOUNTING PLATE FROM THE FIXTURE SHALL BE SECURED TO THE BRIDGE SOFFIT.

3 -FOR CIRCUIT CONTINUITY SEE LIGHTING AND SIGN ILLUMINATION.

4 -USE ONE HOLE PIPE STRAP FOR CONDUCT TO SECURE TO BRIDGE.

CONDUIT NOTES:

1 -1"C, 2#10(LTG)

2 -Exist 1"C, 2#10(ltg)

3 -2"C, (SEE SIGN ILLUMINATION PLANS)

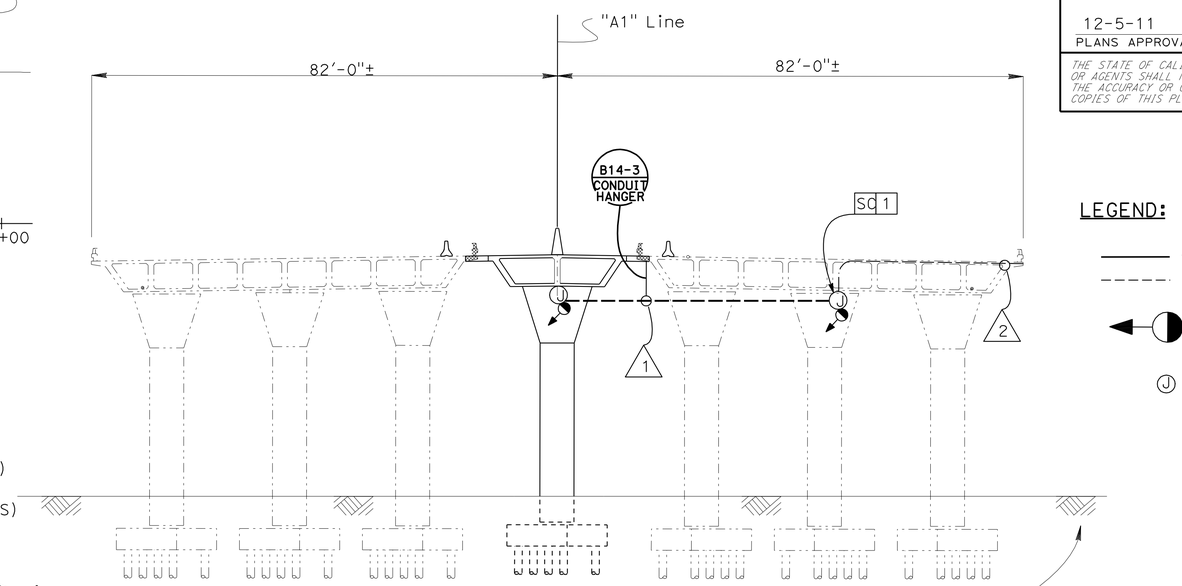

SOUTH SIDE

NO SCALE

LEGEND:

-NEW STRUCTURE

-EXISTING STRUCTURE

-400 W HPS SOFFIT FIXTURE. (TOTAL=6)

J -JUNCTION BOX (TYPE 4 NEMA) (TOTAL=6)

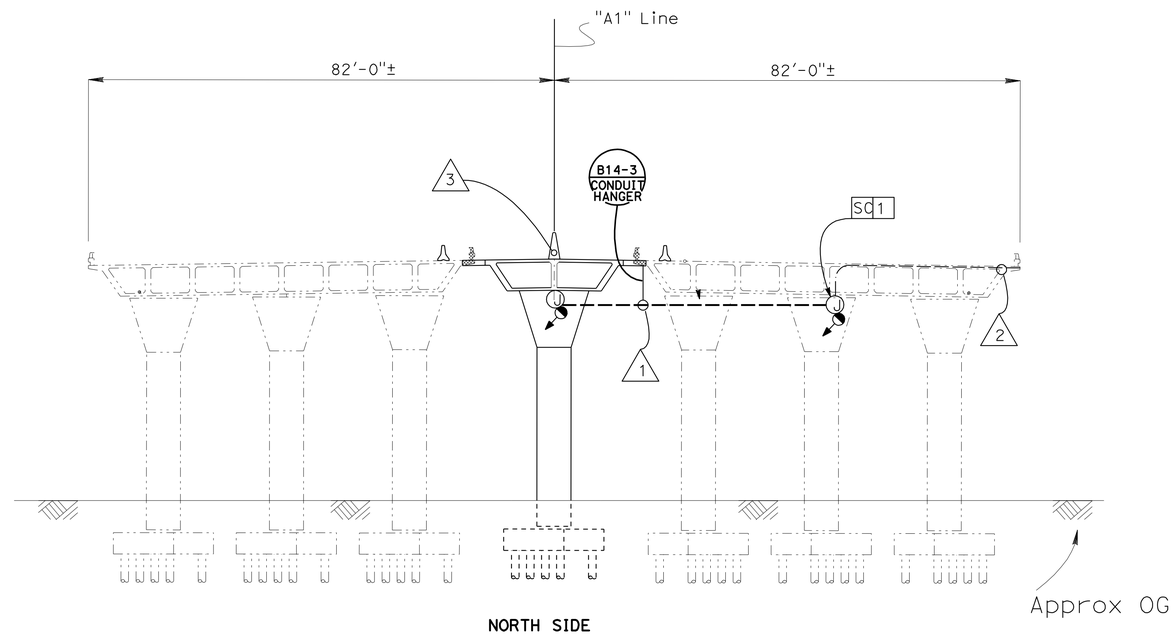

NORTH SIDE

NO SCALE

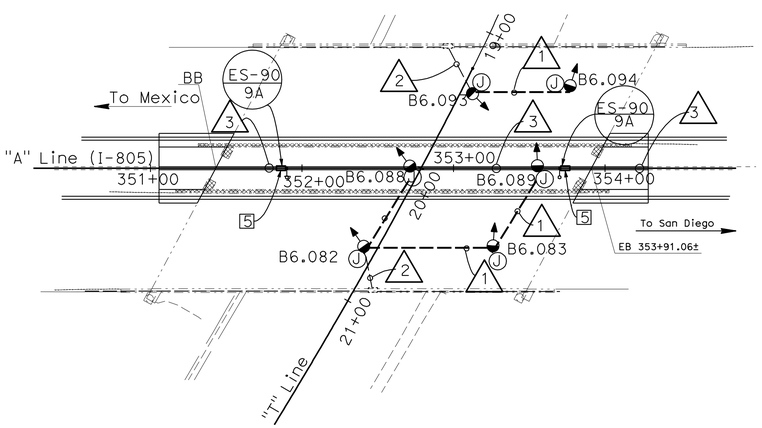

PLAN

1"=50'

BRIDGE No. 57-0635

TELEGRAPH CANYON ROAD UC

LIGHTING CITY STREET BRIDGE ELECTRICAL

E-38

APPROVED FOR ELECTRICAL WORK ONLY

SCALE AS NOTED

STATE OF CALIFORNIA - DEPARTMENT OF TRANSPORTATION

Caltrans® TRAFFIC ELECTRICAL

FUNCTIONAL SUPERVISOR: DALE WILSON

CALCULATED-DESIGNED BY: HECTOR SANTAMARIA

CHECKED BY: ENRIQUE BERNAL

REVISED BY / DATE REVISED

LAST REVISION 09-26-11 | DATE PLOTTED => 12-DEC-2011 | TIME PLOTTED => 12:32

Dist	COUNTY	ROUTE	POST MILES TOTAL PROJECT	SHEET No.	TOTAL SHEETS
11	SD	54,805	1.8,5.5/9.4	456	635

Héctor A. Santamaría 08-25-11
REGISTERED ELECTRICAL ENGINEER DATE

12-5-11
PLANS APPROVAL DATE

REGISTERED PROFESSIONAL ENGINEER HECTOR A. SANTAMARIA No. 18207 Exp. 12-31-11 ELECTRICAL STATE OF CALIFORNIA

THE STATE OF CALIFORNIA OR ITS OFFICERS OR AGENTS SHALL NOT BE RESPONSIBLE FOR THE ACCURACY OR COMPLETENESS OF SCANNED COPIES OF THIS PLAN SHEET.

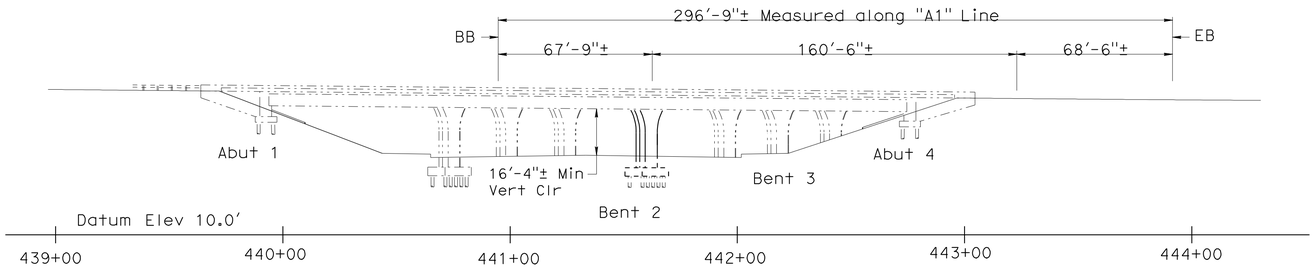

ELEVATION

NO SCALE

LEGEND:

-NEW STRUCTURE
-EXISTING STRUCTURE
-200 W HPS SOFFIT FIXTURE. (TOTAL=10)
(J) -JUNCTION BOX (TYPE 4 NEMA) (TOTAL=10)

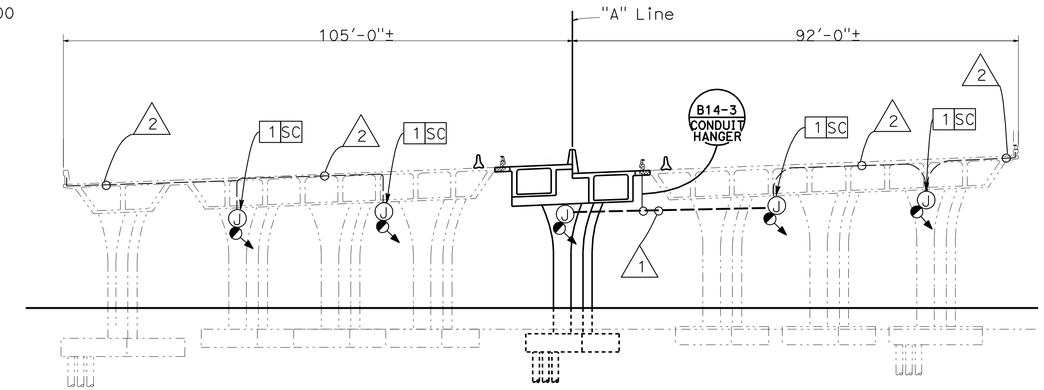

SOUTH SIDE

NO SCALE

NOTES:

1 -REMOVE Exist LIGHT FIXTURE AND REPLACE WITH A JUNCTION BOX AND NEW LIGHT FIXTURE.

2 -THE MOUNTING PLATE FROM THE FIXTURE SHALL BE SECURED TO THE BRIDGE SOFFIT.

3 -FOR CIRCUIT CONTINUITY SEE LIGHTING AND SIGN ILLUMINATION.

4 -USE ONE HOLE PIPE STRAP FOR CONDUCT TO SECURE TO BRIDGE SOFFIT.

CONDUIT NOTES:

1 -1"C, 2#10(LTG)

2 -Exist 1"C, 2#10(ltg)

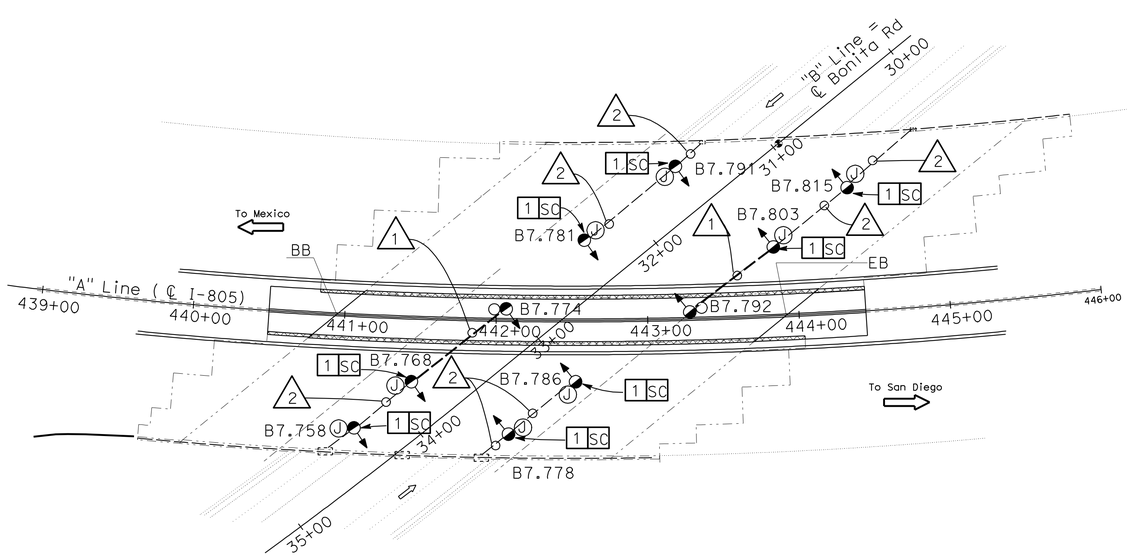

PLAN

1"=50'

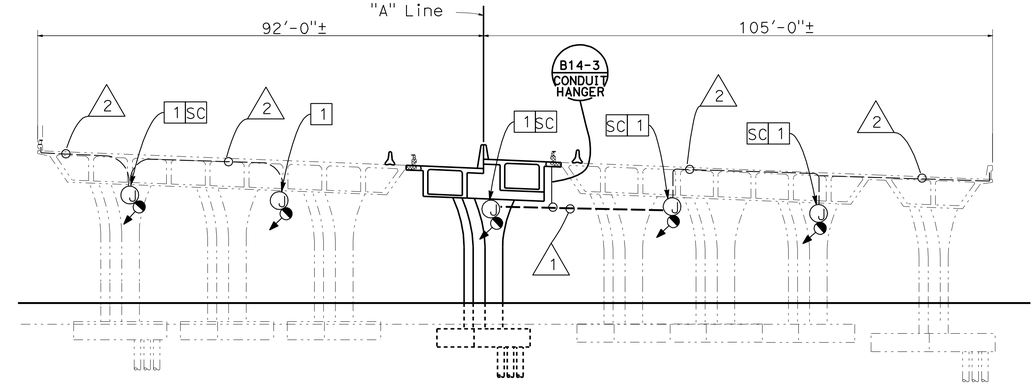

NORTH SIDE

NO SCALE

BRIDGE No. 57-0637
BONITA ROAD UC

LIGHTING CITY STREET BRIDGE ELECTRICAL

E-39

APPROVED FOR ELECTRICAL WORK ONLY

SCALE AS NOTED

STATE OF CALIFORNIA - DEPARTMENT OF TRANSPORTATION
Caltrans® TRAFFIC ELECTRICAL

FUNCTIONAL SUPERVISOR: DALE WILSON
CALCULATED-DESIGNED BY: ENRIQUE BERNAL
CHECKED BY: HECTOR SANTAMARIA
REVISED BY / DATE REVISED

LAST REVISION 09-26-11 | DATE PLOTTED => 12-DEC-2011 | TIME PLOTTED => 07:31

Dist	COUNTY	ROUTE	POST MILES TOTAL PROJECT	SHEET No.	TOTAL SHEETS
11	SD	54,805	1.8,5.5/9.4	457	635

Héctor A. Santamaría 08-25-11
REGISTERED ELECTRICAL ENGINEER DATE

12-5-11
PLANS APPROVAL DATE

REGISTERED PROFESSIONAL ENGINEER HECTOR A. SANTAMARIA No. 18207 Exp. 12-31-11 ELECTRICAL STATE OF CALIFORNIA

THE STATE OF CALIFORNIA OR ITS OFFICERS OR AGENTS SHALL NOT BE RESPONSIBLE FOR THE ACCURACY OR COMPLETENESS OF SCANNED COPIES OF THIS PLAN SHEET.

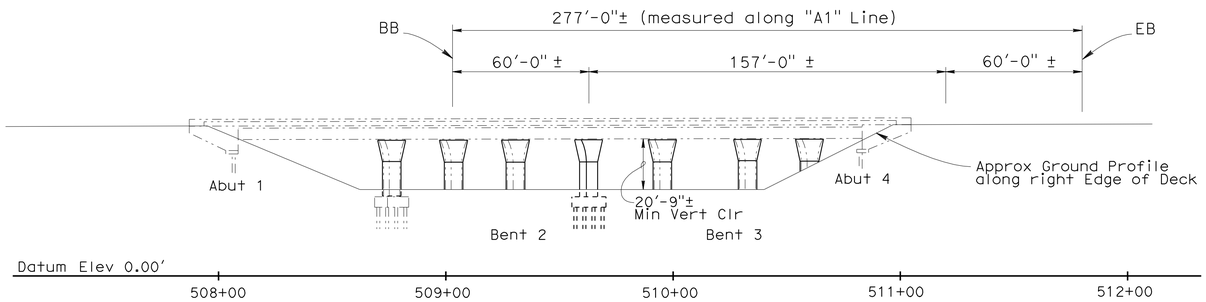

ELEVATION
NO SCALE

NOTES:

1 -REMOVE Exist LIGHT FIXTURE AND REPLACE WITH A JUNCTION BOX AND NEW LIGHT FIXTURE.

2 -THE MOUNTING PLATE FROM THE FIXTURE SHALL BE SECURED TO THE BRIDGE SOFFIT.

3 -FOR CIRCUIT CONTINUITY SEE LIGHTING AND SIGN ILLUMINATION.

4 -USE ONE HOLE PIPE STRAP FOR CONDUCT TO SECURE TO BRIDGE.

5 -TYPE 15 STANDARD ON TOP OF BARRIER SEE STRUCTURE PLANS.

CONDUIT NOTES:

1 -1"C, 2#10(LTG)

2 -Exist 1"C, 2#10(ltg)

3 -2"C, (SEE SIGN ILLUMINATION PLANS)

LEGEND:

-NEW STRUCTURE

-EXISTING STRUCTURE

-200 W HPS SOFFIT FIXTURE. (TOTAL=10)

J -JUNCTION BOX (TYPE 4 NEMA) (TOTAL=10)

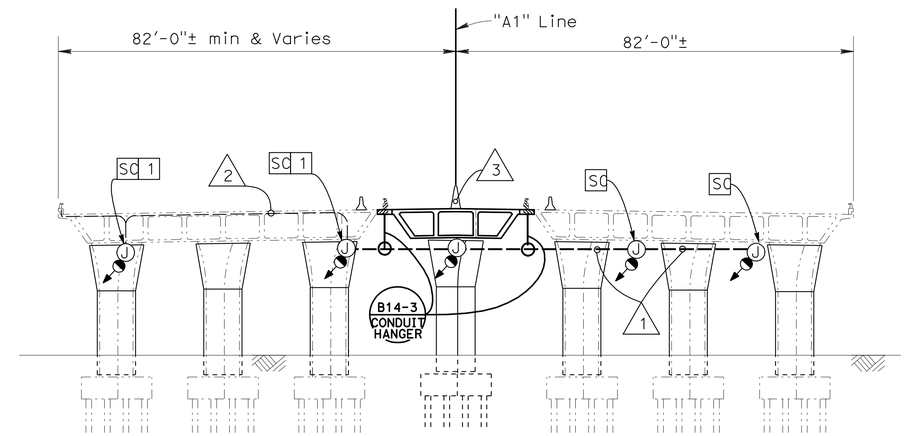

SOUTH SIDE
NO SCALE

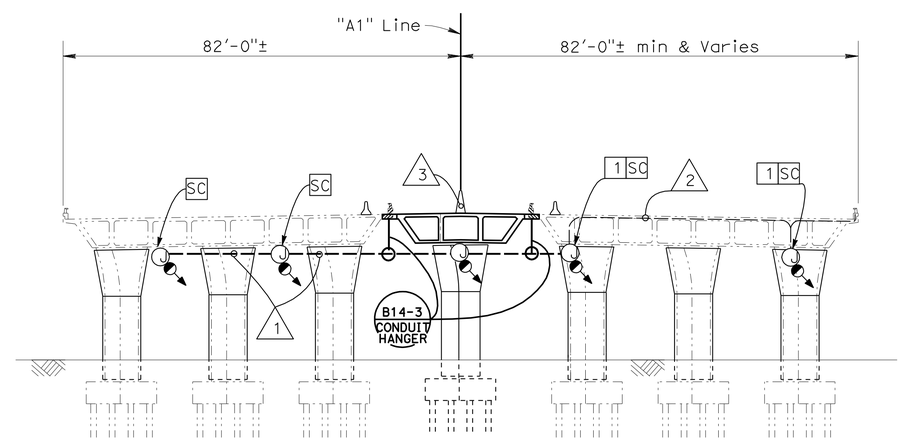

NORTH SIDE
NO SCALE

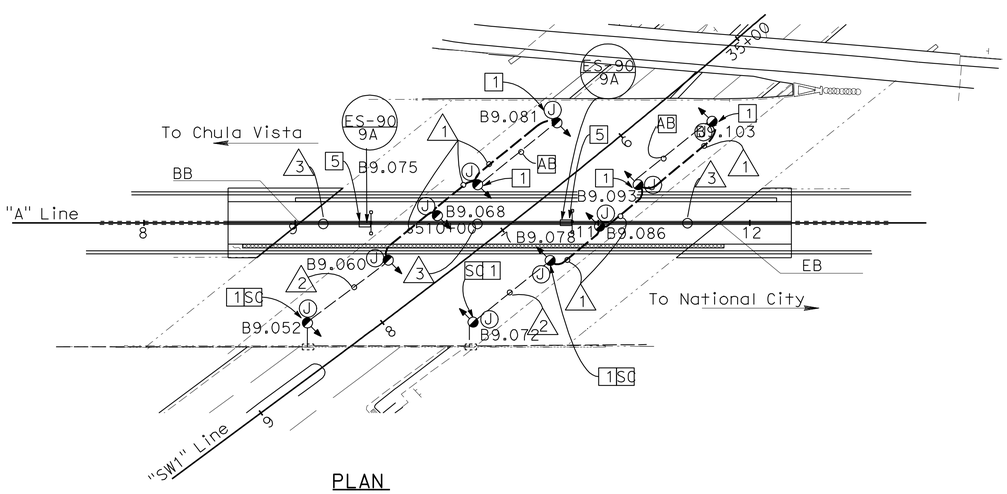

PLAN
1"=50'

BRIDGE No. 57-0639
SWEETWATER ROAD UC

LIGHTING CITY STREET BRIDGE ELECTRICAL

E-40

APPROVED FOR ELECTRICAL WORK ONLY

SCALE AS NOTED

STATE OF CALIFORNIA - DEPARTMENT OF TRANSPORTATION
Caltrans® TRAFFIC ELECTRICAL

FUNCTIONAL SUPERVISOR: DALE WILSON
CALCULATED-DESIGNED BY: HECTOR SANTAMARIA
CHECKED BY: ENRIQUE BERNAL
REVISED BY
DATE REVISED

LAST REVISION 09-26-11
DATE PLOTTED => 12-DEC-2011
TIME PLOTTED => 07:31

Dist	COUNTY	ROUTE	POST MILES TOTAL PROJECT	SHEET No.	TOTAL SHEETS
11	SD	54,805	1.8,5.5/9.4	458	635

Héctor A. Santamaría 08-25-11
REGISTERED ELECTRICAL ENGINEER DATE

12-5-11
PLANS APPROVAL DATE

REGISTERED PROFESSIONAL ENGINEER HECTOR A. SANTAMARIA No. 18207 Exp. 12-31-11 ELECTRICAL STATE OF CALIFORNIA

THE STATE OF CALIFORNIA OR ITS OFFICERS OR AGENTS SHALL NOT BE RESPONSIBLE FOR THE ACCURACY OR COMPLETENESS OF SCANNED COPIES OF THIS PLAN SHEET.

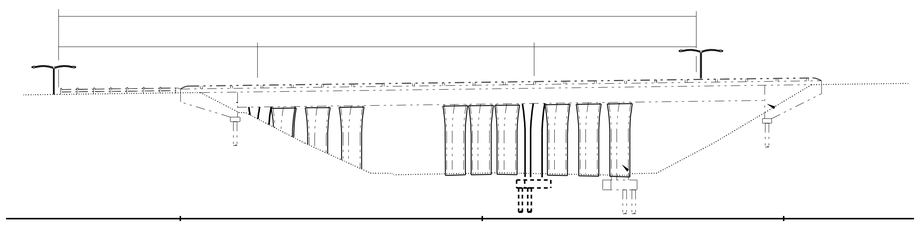

ELEVATION
NO SCALE

NOTES:

1 -REMOVE Exist LIGHT FIXTURE AND REPLACE WITH A JUNCTION BOX AND NEW LIGHT FIXTURE.

2 -THE MOUNTING PLATE FROM THE FIXTURE SHALL BE SECURED TO THE BRIDGE SOFFIT.

3 -FOR CIRCUIT CONTINUITY SEE LIGHTING AND SIGN ILLUMINATION.

4 -USE ONE HOLE PIPE STRAP FOR CONDUCT TO SECURE TO BRIDGE.

5 -TYPE 15 STANDARD ON TOP OF BARRIER SEE STRUCTURE PLANS.

CONDUIT NOTES:

1 -1"C, 2#10(LTG)

2 -Exist 1"C, 2#10(ltg)

LEGEND:

-NEW STRUCTURE
-EXISTING STRUCTURE

-200 W HPS SOFFIT FIXTURE. (TOTAL=6)

J -JUNCTION BOX (TYPE 4 NEMA) (TOTAL=6)

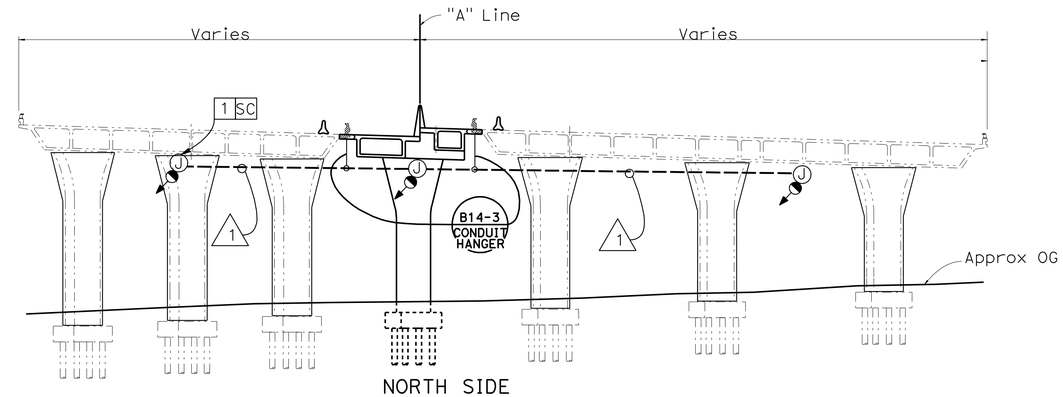

NORTH SIDE
NO SCALE

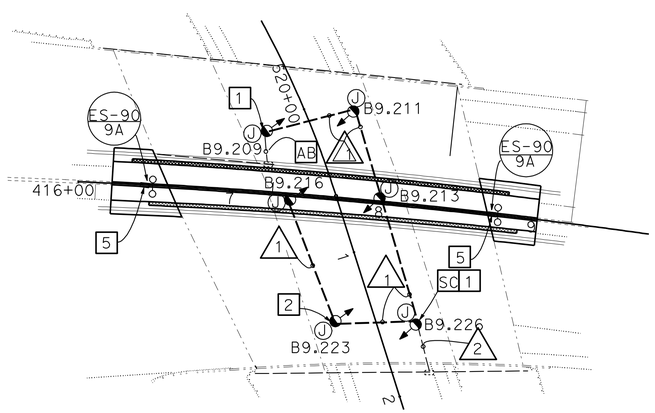

PLAN
1"=50'

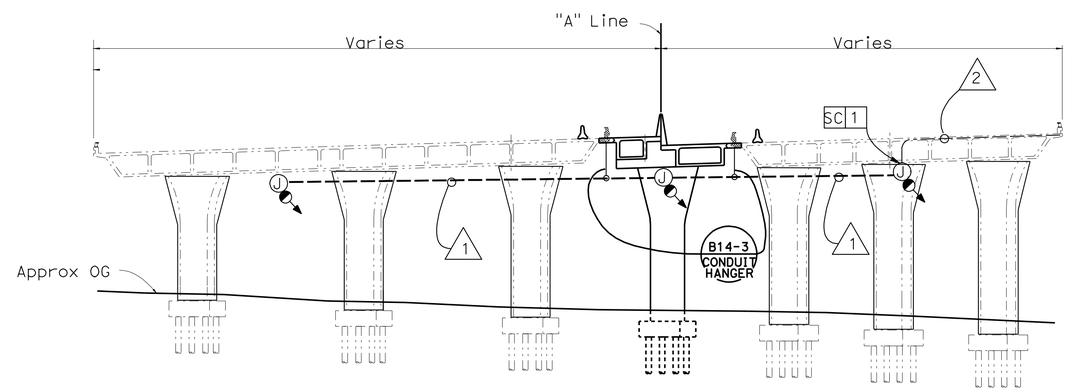

NORTH SIDE
NO SCALE

APPROVED FOR ELECTRICAL WORK ONLY

BRIDGE No. 57-0640
EUCLID AVENUE UC

SCALE AS NOTED

LIGHTING CITY STREET BRIDGE ELECTRICAL

E-41

STATE OF CALIFORNIA - DEPARTMENT OF TRANSPORTATION
Caltrans® TRAFFIC ELECTRICAL

FUNCTIONAL SUPERVISOR: DALE WILSON
CALCULATED-DESIGNED BY: HECTOR SANTAMARIA
CHECKED BY: ENRIQUE BERNAL
REVISED BY / DATE REVISED

LAST REVISION 09-26-11
DATE PLOTTED => 12-DEC-2011
TIME PLOTTED => 12:32

Dist	COUNTY	ROUTE	POST MILES TOTAL PROJECT	SHEET No.	TOTAL SHEETS
11	SD	54,805	1.8,5.5/9.4	459	635

Héctor A. Santamaría 08-25-11
REGISTERED ELECTRICAL ENGINEER DATE

12-5-11
PLANS APPROVAL DATE

REGISTERED PROFESSIONAL ENGINEER HECTOR A. SANTAMARIA No. 18207 Exp. 12-31-11 ELECTRICAL STATE OF CALIFORNIA

THE STATE OF CALIFORNIA OR ITS OFFICERS OR AGENTS SHALL NOT BE RESPONSIBLE FOR THE ACCURACY OR COMPLETENESS OF SCANNED COPIES OF THIS PLAN SHEET.

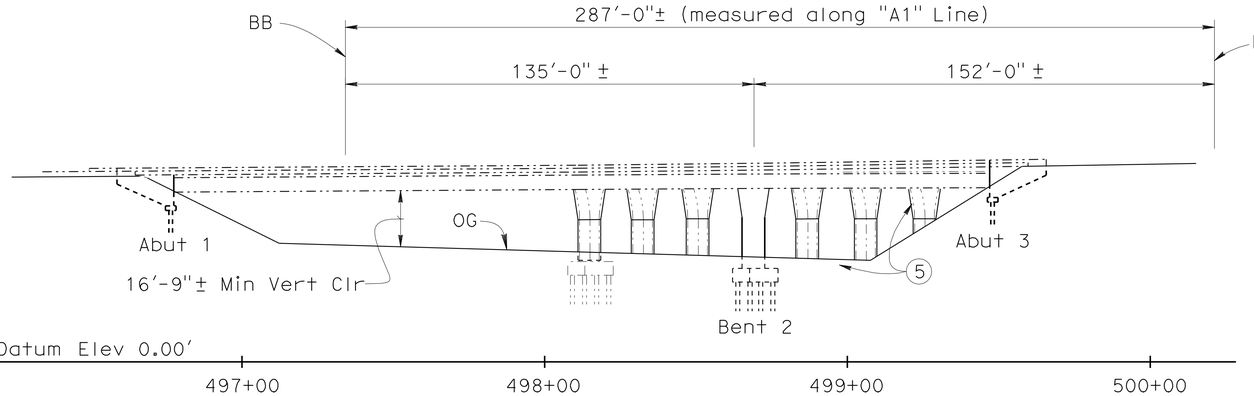

ELEVATION
NO SCALE

NOTES:

1 -REMOVE Exist LIGHT FIXTURE AND REPLACE WITH A JUNCTION BOX AND NEW LIGHT FIXTURE.

2 -THE MOUNTING PLATE FROM THE FIXTURE SHALL BE SECURED TO THE BRIDGE SOFFIT.

3 -FOR CIRCUIT CONTINUITY SEE LIGHTING AND SIGN ILLUMINATION.

4 -USE ONE HOLE PIPE STRAP FOR CONDUCT TO SECURE TO BRIDGE.

5 -TYPE 15 STANDARD ON TOP OF BARRIER SEE STRUCTURE PLANS.

CONDUIT NOTES:

1 -1"C, 2#10(LTG)

2 -Exist 1"C, 2#10(ltg)

3 -2"C, (SEE SIGN ILLUMINATION PLANS)

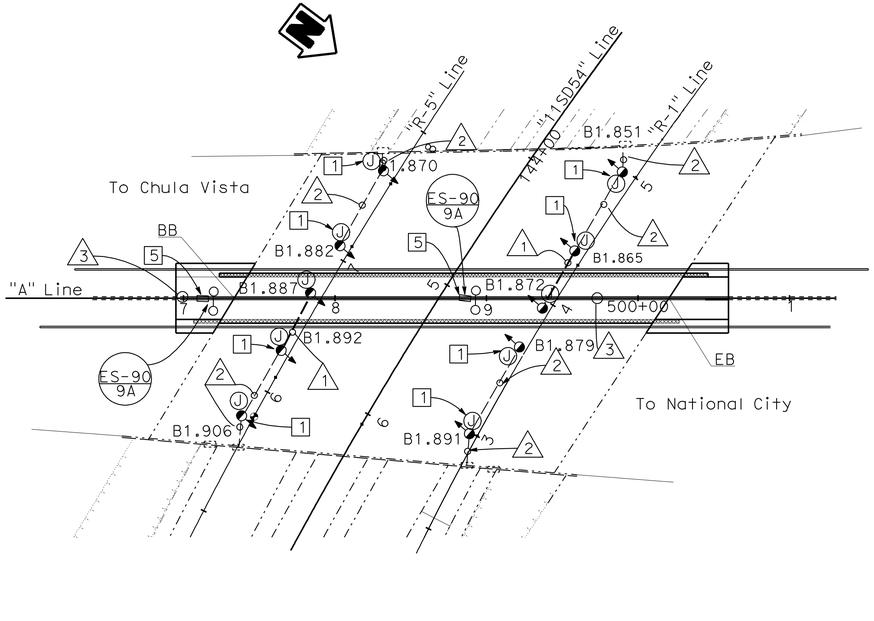

PLAN
1"=50'

LEGEND:

-NEW STRUCTURE
-EXISTING STRUCTURE
-200 W HPS SOFFIT FIXTURE. (TOTAL=10)
J -JUNCTION BOX (TYPE 4 NEMA) (TOTAL=10)

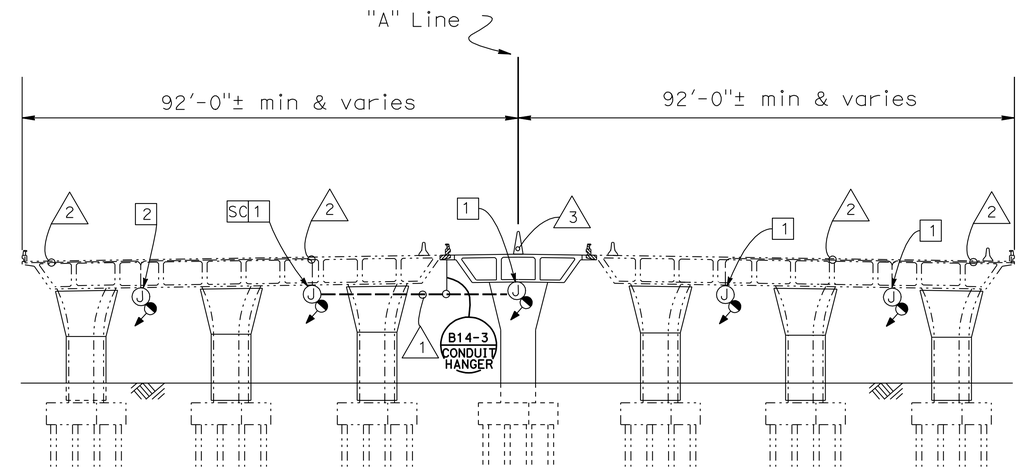

SOUTH SIDE
NO SCALE

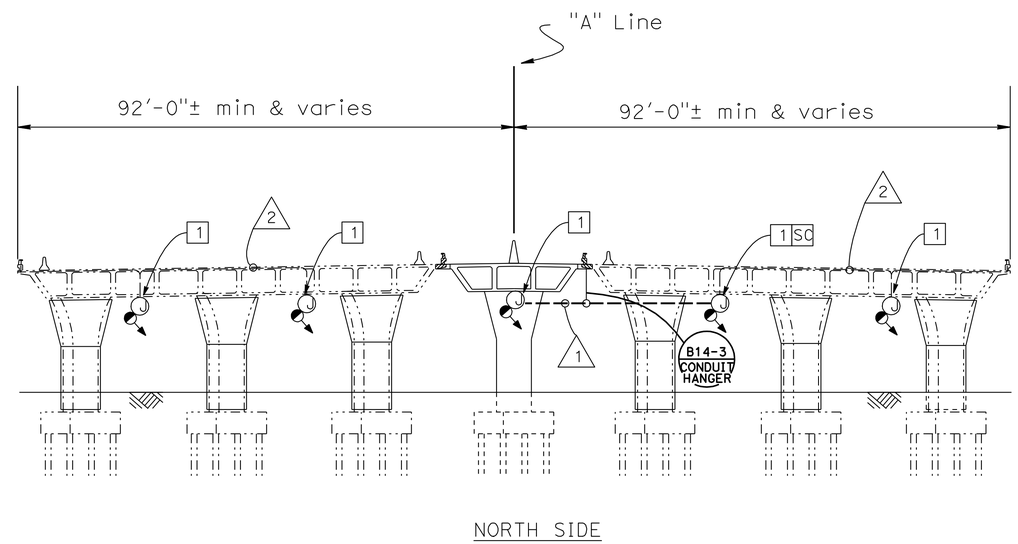

NORTH SIDE
NO SCALE

BRIDGE No. 57-0746 RL
ROUTE 805/ROUTE 54

LIGHTING CITY STREET BRIDGE ELECTRICAL

E-42

APPROVED FOR ELECTRICAL WORK ONLY

SCALE AS NOTED

STATE OF CALIFORNIA - DEPARTMENT OF TRANSPORTATION
Caltrans® TRAFFIC ELECTRICAL

FUNCTIONAL SUPERVISOR: DALE WILSON
CALCULATED-DESIGNED BY: ENRIQUE BERNAL
CHECKED BY: HECTOR SANTAMARIA
REVISED BY / DATE REVISED

LAST REVISION 09-26-11
DATE PLOTTED => 12-DEC-2011
TIME PLOTTED => 07:31

Dist	COUNTY	ROUTE	POST MILES TOTAL PROJECT	SHEET No.	TOTAL SHEETS
11	SD	54,805	1.8,5.5/9.4	460	635

Héctor A. Santamaría 08-25-11
REGISTERED ELECTRICAL ENGINEER DATE

12-5-11
PLANS APPROVAL DATE

REGISTERED PROFESSIONAL ENGINEER HECTOR A. SANTAMARIA No. 18207 Exp. 12-31-11 ELECTRICAL STATE OF CALIFORNIA

THE STATE OF CALIFORNIA OR ITS OFFICERS OR AGENTS SHALL NOT BE RESPONSIBLE FOR THE ACCURACY OR COMPLETENESS OF SCANNED COPIES OF THIS PLAN SHEET.

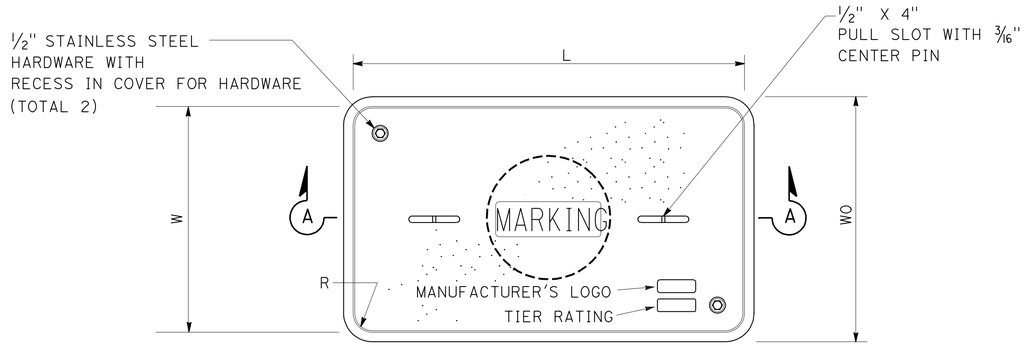

TOP VIEW

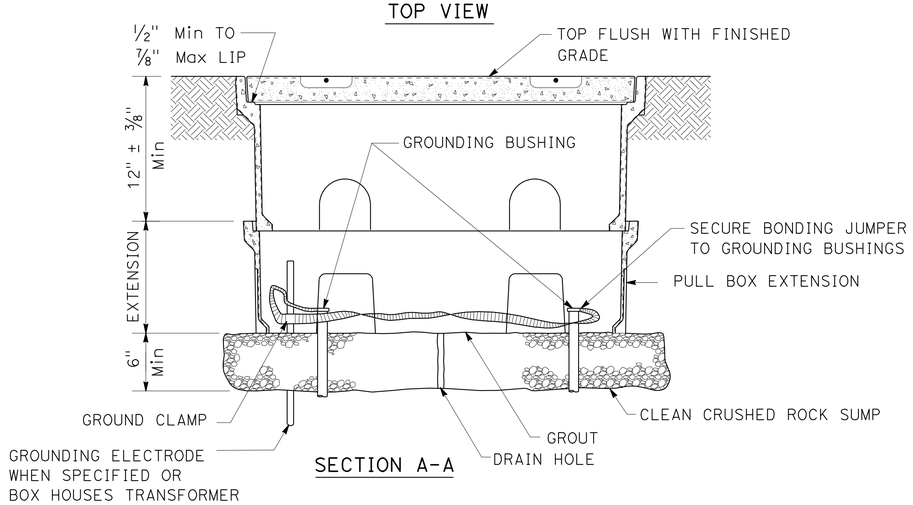

SECTION A-A

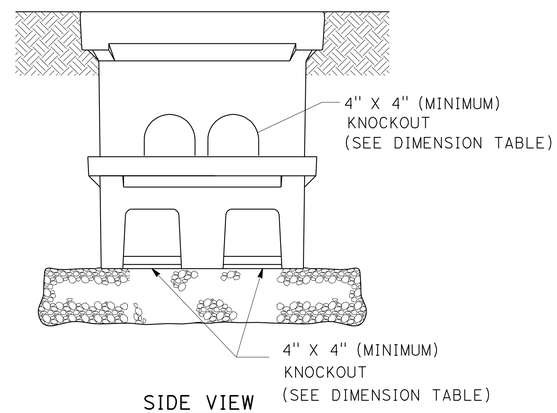

SIDE VIEW

INSTALLATION DETAILS

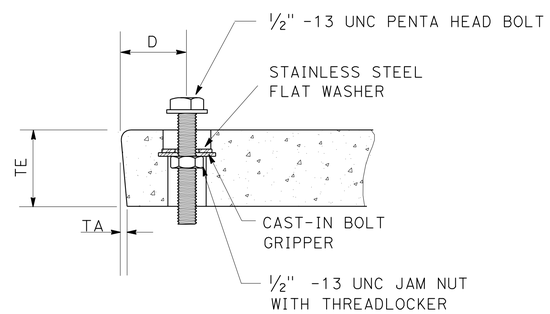

TYPICAL COVER CAPTIVE BOLTDOWN
(OR SIMILAR)

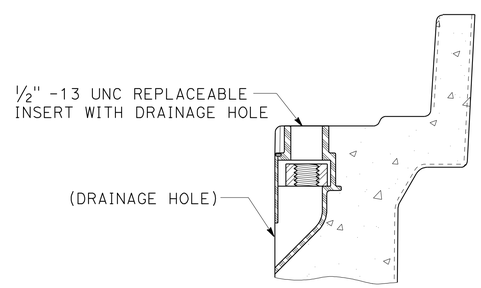

TYPICAL INSERT
(OR SIMILAR)

NOTES:

1. ALL NON-TRAFFIC RATED PULL BOXES AND COVERS, FOR IN GROUND AND IN SIDEWALK APPLICATIONS, MUST BE INDEPENDENTLY TESTED AND CERTIFIED AS COMPLYING WITH THE PROVISIONS OF ANSI/SCTE 77 2010 "SPECIFICATION FOR UNDERGROUND ENCLOSURE INTEGRITY." PULL BOXES MUST MEET THE TIER 22 APPLICATION. COVERS NOT INSTALLED IN SIDEWALKS MUST MEET THE TIER 22 APPLICATION. COVERS INSTALLED IN SIDEWALKS MUST MEET THE TIER 8 APPLICATION.
2. COVERS MUST BE SECURED WITH A CAPTIVE BOLT DESIGN USING 1/2"-13 UNC LARGE PENTA-HEAD BOLTS. THE BOLTS AND WASHERS MUST BE STAINLESS STEEL.
3. THE CAPTIVE BOLT DESIGN MUST BE INDEPENDENTLY TESTED AND CERTIFIED AS CAPABLE OF WITHSTANDING A TORQUE OF 56 Ft·Lb AND A MINIMUM PULL OUT STRENGTH OF 750 LBS. THE PULL OUT TEST MUST BE PERFORMED WITH THE COVER IN PLACE AND THE BOLTS TORQUED TO 56 Ft·Lb THE BOLTS, INSERTS, AND COVER MUST NOT BE DAMAGED WHEN TESTED UP TO THE MINIMUM PULL OUT STRENGTH.
4. MARKINGS, SHOWING THE TIER RATING, MUST BE LABELED OR STENCILED ON THE INSIDE AND OUTSIDE OF THE PULL BOX AND ON THE UNDERSIDE OF THE COVER.
5. THE TIER RATING MUST BE EMBOSSED ON THE TOP SURFACE OF THE COVER.
6. COVERS AND PULL BOXES MUST BE INTERCHANGEABLE WITH CALIFORNIA STANDARD MALE AND FEMALE GAGES. SEE STANDARD PLAN ES-8, NOTE 7. MINIMUM RADIUS OF TOP OUTSIDE EDGE IS 1/8".
7. PULL BOXES MUST NOT BE INSTALLED WITHIN THE BOUNDARIES OF NEW OR EXISTING CURB RAMPS OR DRIVEWAYS.
8. AN EXTENSION MAY BE SUBSTITUTED WITH A PULL BOX IF THE BOTTOM EDGE OF THE UPPER PULL BOX FITS EVENLY ONTO THE LIP OF THE LOWER PULL BOX.
9. SEE STANDARD PLAN ES-8, NOTES 3,4,6 AND 9 FOR OTHER REQUIREMENTS. THESE ADDRESS, BUT ARE NOT LIMITED TO: PLACEMENT, SURROUNDING GRADE, REQUIREMENTS IN UNPAVED AREAS, PULL BOX COVER MARKING, NOMINAL DIMENSIONS OF THE OPENING, AND THE LOCATION OF BOXES FOR ELECTROLIERS AND STANDARDS.

DIMENSION TABLE

PULL BOX	PULL BOX			COVER							PULL BOX KNOCKOUTS		EXTENSION KNOCKOUTS	
	MINIMUM DEPTH BOX (In)	MINIMUM DEPTH EXTENSION (In)	MAXIMUM WEIGHT (Lb)	L (In)	W (In)	R (In)	TE (In)	TA (In)	D (In)	MAXIMUM WEIGHT (Lb)	SIDE	END	SIDE	END
No. 5	12	10	55	23 1/4	13 3/4	1 3/8	2	1/8	1 3/4	60	2	1	2	1
No. 6	12	10	70	30 1/2	17 1/2	1 3/8	2	1/8	2	85	2	2	2	2

APPROVED FOR ELECTRICAL WORK ONLY

ELECTRICAL SYSTEMS (NON-TRAFFIC RATED PULL BOX)

NO SCALE

E-43

STATE OF CALIFORNIA - DEPARTMENT OF TRANSPORTATION
Caltrans® TRAFFIC ELECTRICAL

FUNCTIONAL SUPERVISOR: DALE WILSON
CALCULATED-DESIGNED BY: HECTOR SANTAMARIA
CHECKED BY: ENRIQUE BERNAL
REVISED BY
DATE REVISED

LAST REVISION 09-26-11
DATE PLOTTED => 12-DEC-2011
TIME PLOTTED => 07:31

Dist	COUNTY	ROUTE	POST MILES TOTAL PROJECT	SHEET No.	TOTAL SHEETS
11	SD	54,805	1.8,5.5/9.4	461	635

Héctor A. Santamaría 08-25-11
REGISTERED ELECTRICAL ENGINEER DATE

12-5-11
PLANS APPROVAL DATE

REGISTERED PROFESSIONAL ENGINEER HECTOR A. SANTAMARIA No. 18207 Exp. 12-31-11 ELECTRICAL STATE OF CALIFORNIA

THE STATE OF CALIFORNIA OR ITS OFFICERS OR AGENTS SHALL NOT BE RESPONSIBLE FOR THE ACCURACY OR COMPLETENESS OF SCANNED COPIES OF THIS PLAN SHEET.

NOTES:

1 - SEE CAMERA CABLE CROSS SECTION ON THIS SHEET.

2 - SEE TABLE "A" FOR CONNECTOR 1 ASSIGNMENT.

3 - SEE TABLE "B" FOR CONNECTOR 2 ASSIGNMENT.

4 - SEE TABLE "C" FOR CONNECTOR 3 ASSIGNMENT.

5 - MIn 1 METER OF SLACK IS REQUIRED FROM CAMERA CABLE TO THE CONNECTORS.

6 - SEE TABLE "D" FOR CONNECTOR ASSIGNMENT.

7 - MOUNT TERMINAL BLOCK IN EXISTING CCTV CABINET.

8 - CONTRACTOR SHALL VERIFY THE LENGTH OF CAMERA CABLE AT EACH LOCATION AS SHOWN IN ELECTRICAL PLANS. A SLACK OF 2 METERS IS REQUIRED AT EACH LOCATION.

9 - ENGINEER TO PROVIDE DE-9 TO TERMINAL BLOCK DIAGRAM.

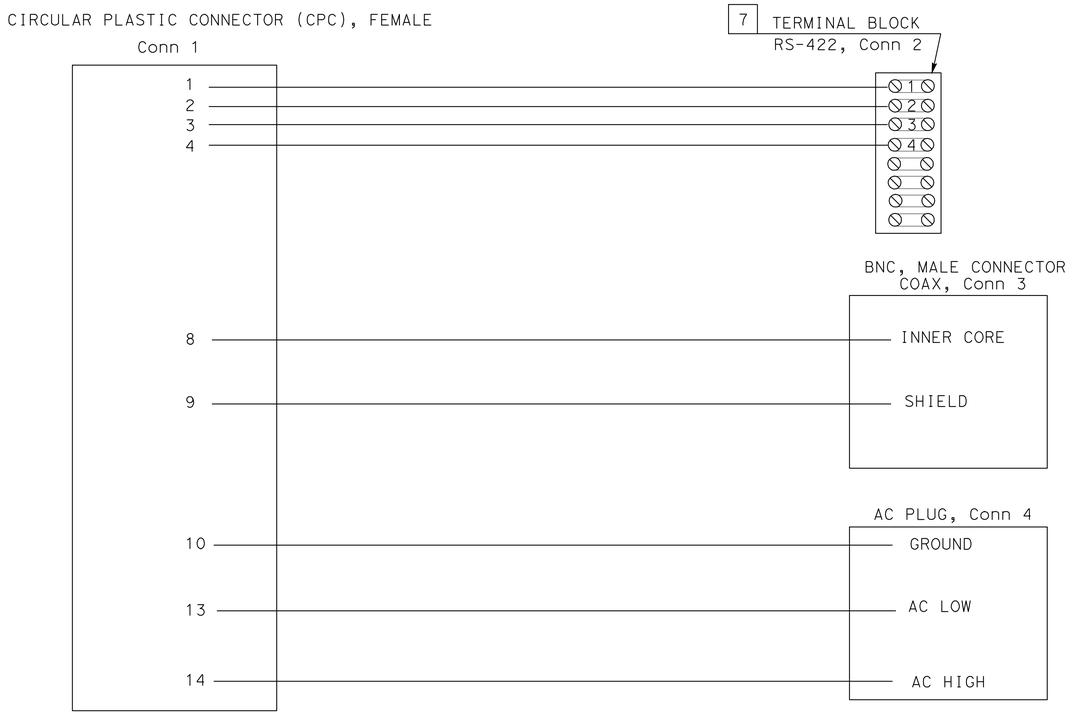

TABLE "D":

CPC PIN DESCRIPTION
PIN 1 - 22 AWG,RS-422
PIN 2 - 22 AWG,RS-422
PIN 3 - 22 AWG,RS-422
PIN 4 - 22 AWG,RS-422
PIN 8 - RG-59,CORE WIRE
PIN 9 - RG-59,SHIELD
PIN 10 - 18 AWG,AC Gnd
PIN 13 - AC LOW
PIN 14 - AC HIGH

TABLE "A":

Conn 1 DESCRIPTION			
PIN	FUNCTION	WIRE COLOR	WIRE GAUGE
1	CAMERA CONTROL RX-	BROWN	22 AWG
2	CAMERA CONTROL RX+	YELLOW	22 AWG
3	CAMERA CONTROL TX-	BLUE	22 AWG
4	CAMERA CONTROL TX+	RED	22 AWG
8	VIDEO SIGNAL COAX INNER CORE	BARE	
9	VIDEO SIGNAL COAX SHIELD	WHITE/BLACK	22 AWG
10	CAMERA POWER,GROUND	GREEN	18 AWG
13	CAMERA POWER,AC LOW	WHITE	18 AWG
14	CAMERA POWER,AC HIGH	BLACK	18 AWG

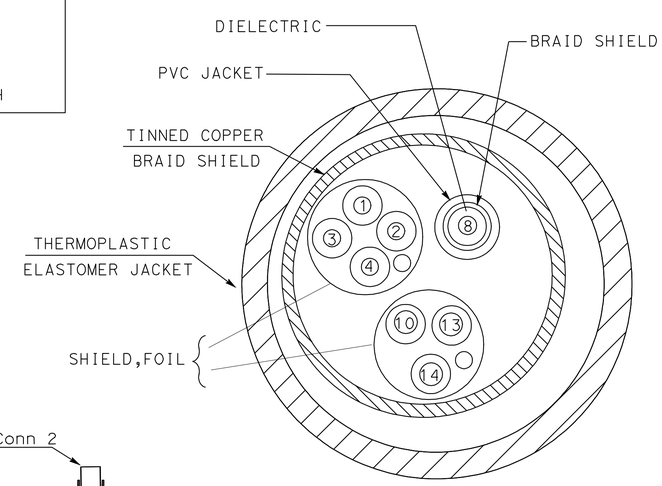

CAMERA CABLE CROSS SECTION 6

TABLE "B":

Conn 2 DESCRIPTION			
POSITION	FUNCTION	WIRE COLOR	WIRE GAUGE
1	CAMERA CONTROL RX-	BROWN	22 AWG
2	CAMERA CONTROL RX+	YELLOW	22 AWG
3	CAMERA CONTROL TX-	BLUE	22 AWG
4	CAMERA CONTROL TX+	RED	22 AWG

TABLE "C":

Conn 3 DESCRIPTION	
PIN	FUNCTION
CENTER	VIDEO SIGNAL INNER CORE,COAX
SHIELD	VIDEO SIGNAL SHIELD,COAX

CONNECTOR DESCRIPTIONS			
CONNECTOR	TYPE	FUNCTION	LOCATION
Conn 1	CPC	CONTROL,VIDEO,POWER	POLE TOP 2
Conn 2	TERMINAL BLOCK	CAMERA CONTROL	CCTV CABINET 3
Conn 3	BNC,MALE	VIDEO	CCTV CABINET 4
Conn 4	AC PLUG,3 PRONG	CAMERA POWER	CCTV CABINET

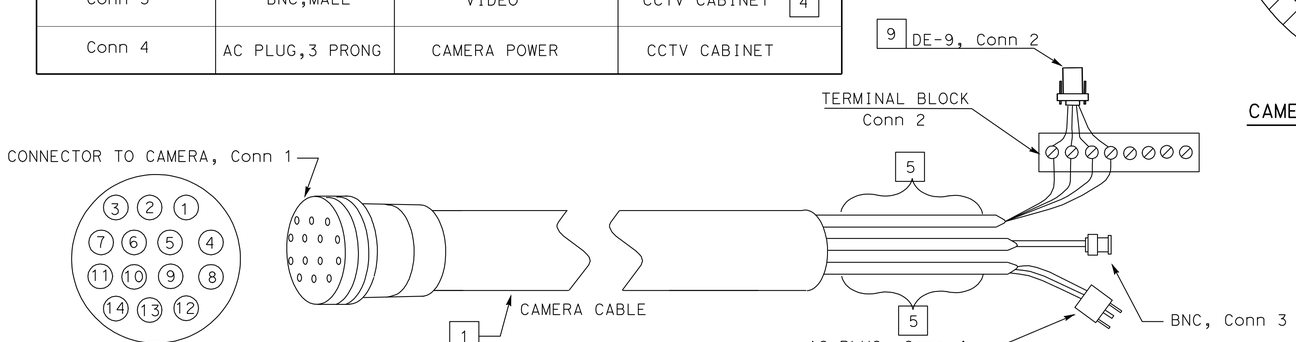

CONNECTOR 1
PIN ASSIGNMENT (PLAN VIEW) 2

"CAMERA CABLE"

CLOSED CIRCUIT TELEVISION SYSTEM
(ELECTRICAL DETAILS)

APPROVED FOR ELECTRICAL WORK ONLY

NO SCALE

E-44

STATE OF CALIFORNIA - DEPARTMENT OF TRANSPORTATION
Caltrans TRAFFIC ELECTRICAL

FUNCTIONAL SUPERVISOR: DALE WILSON
CALCULATED-DESIGNED BY: HECTOR SANTAMARIA
CHECKED BY: ENRIQUE BERNAL
REVISED BY / DATE REVISED

LAST REVISION 09-26-11
DATE PLOTTED => 12-DEC-2011
TIME PLOTTED => 07:31

Dist	COUNTY	ROUTE	POST MILES TOTAL PROJECT	SHEET No.	TOTAL SHEETS
11	SD	54,805	1.8,5.5/9.4	462	635

Héctor A. Santamaría 08-25-11
REGISTERED ELECTRICAL ENGINEER DATE

12-5-11
PLANS APPROVAL DATE

REGISTERED PROFESSIONAL ENGINEER HECTOR A. SANTAMARIA No. 18207 Exp. 12-31-11 ELECTRICAL STATE OF CALIFORNIA

THE STATE OF CALIFORNIA OR ITS OFFICERS OR AGENTS SHALL NOT BE RESPONSIBLE FOR THE ACCURACY OR COMPLETENESS OF SCANNED COPIES OF THIS PLAN SHEET.

NOTES:

1 - THIS SHEET DEMONSTRATES TYPICAL EQUIPMENT CONNECTIONS. REFER TO PROJECT PLAN SHEETS FOR REQUIRED WORK.

2 - LABEL CABLE END IN EACH CABINET. THE LABEL NAME SHALL CONTAIN SOURCE AND DESTINATION INFORMATION.

3 - CCTV CAMERA CONTROL CABLE. SEE CAMERA CABLE PLAN SHEET.

4 - WORK BY OTHERS.

5 - 110 PUNCH BLOCK WITH MODULAR 8P8C CONNECTION FOR EACH OCC INSTALLED. TERMINATE OCC PER EIA/TIA 568.

6 - SEE SHEET E-48 FOR CCTV EQUIPMENT PLACEMENT.

7 - SEE SHEET E-47 FOR TDC EQUIPMENT PLACEMENT.

LEGEND:

⊘⊘⊘⊘	TERMINAL BLOCK
□	NETWORK PORT
⊠	RJ11 JACK
EES	ETHERNET EXTENDER SUBSCRIBER
EEP	ETHERNET EXTENDER PROVIDER
OCC	OUTDOOR CATEGORY 5e CABLE
AT&T	AMERICAN TELEPHONE AND TELEGRAPH (TELEPHONE SERVICE PROVIDER)

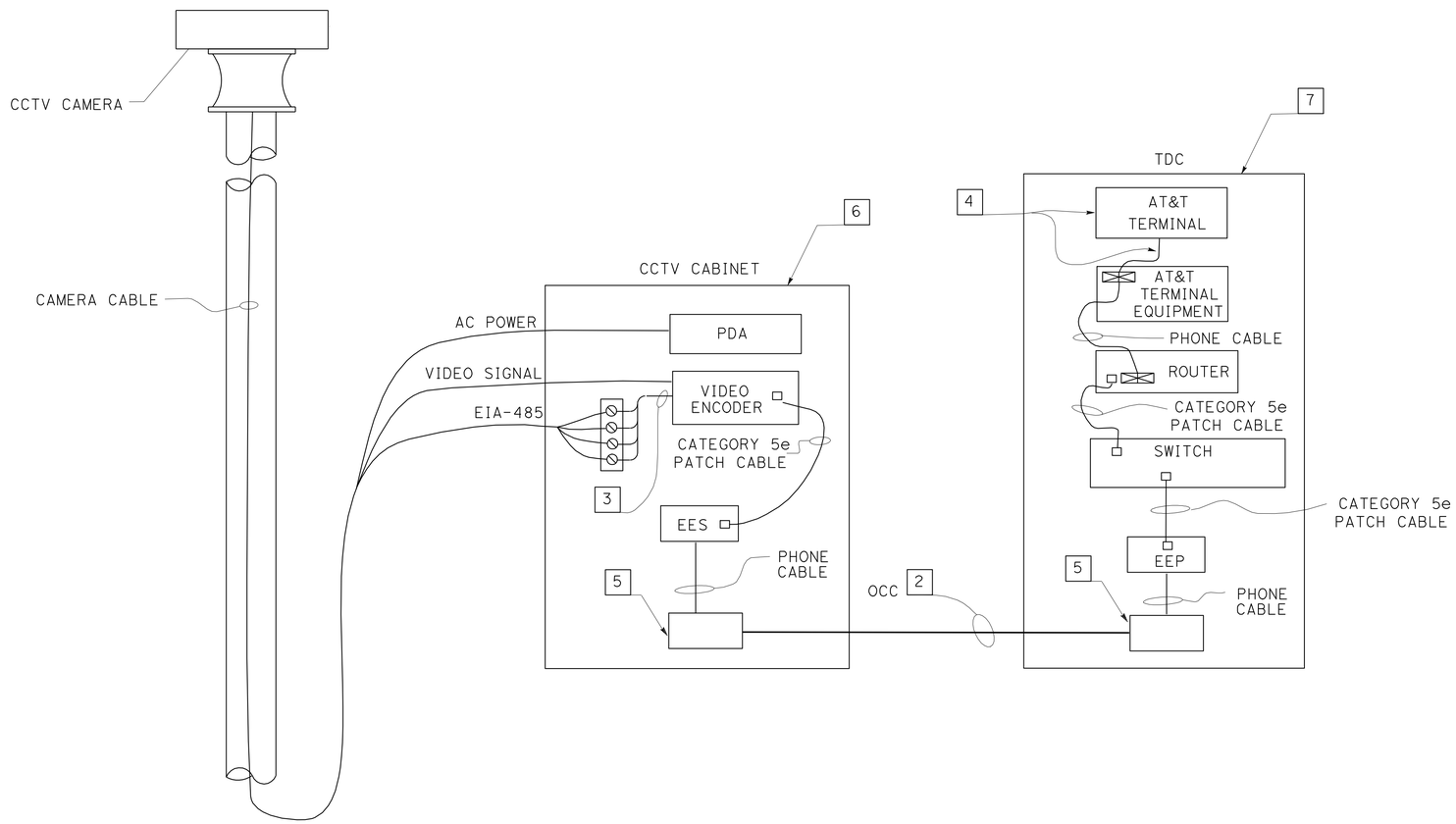

TDC TO CCTV EQUIPMENT CONNECTIONS

CCTV# 142 AND 144

CLOSED CIRCUIT TELEVISION SYSTEM
(ELECTRICAL DETAILS)

APPROVED FOR ELECTRICAL WORK ONLY

NO SCALE

E-45

STATE OF CALIFORNIA - DEPARTMENT OF TRANSPORTATION
Caltrans® TRAFFIC ELECTRICAL

FUNCTIONAL SUPERVISOR: DALE WILSON
CALCULATED-DESIGNED BY: HECTOR SANTAMARIA
CHECKED BY: ENRIQUE BERNAL
REVISED BY
DATE REVISED

LAST REVISION 09-26-11 DATE PLOTTED => 12-DEC-2011 TIME PLOTTED => 12:32

Dist	COUNTY	ROUTE	POST MILES TOTAL PROJECT	SHEET No.	TOTAL SHEETS
11	SD	54,805	1.8,5.5/9.4	463	635

Héctor A. Santamaría 08-25-11
REGISTERED ELECTRICAL ENGINEER DATE

12-5-11
PLANS APPROVAL DATE

REGISTERED PROFESSIONAL ENGINEER HECTOR A. SANTAMARIA No. 18207 Exp. 12-31-11 ELECTRICAL STATE OF CALIFORNIA

THE STATE OF CALIFORNIA OR ITS OFFICERS OR AGENTS SHALL NOT BE RESPONSIBLE FOR THE ACCURACY OR COMPLETENESS OF SCANNED COPIES OF THIS PLAN SHEET.

NOTES:

1 - THIS SHEET DEMONSTRATES TYPICAL EQUIPMENT CONNECTIONS. REFER TO PROJECT PLAN SHEETS FOR REQUIRED WORK.

2 - LABEL CABLE END IN EACH CABINET. THE LABEL NAME SHALL CONTAIN SOURCE AND DESTINATION INFORMATION.

3 - CCTV CAMERA CONTROL CABLE. SEE CAMERA CABLE PLAN SHEET.

4 - WORK BY OTHERS.

5 - 110 PUNCH BLOCK WITH MODULAR 8P8C CONNECTION FOR EACH OCC INSTALLED. TERMINATE OCC PER EIA/TIA 568.

6 - SEE SHEET E-48 FOR CCTV EQUIPMENT PLACEMENT.

7 - SEE SHEET E-47 FOR TDC EQUIPMENT PLACEMENT.

LEGEND:

⊘⊘⊘⊘	TERMINAL BLOCK
□	NETWORK PORT
⊠	RJ11 JACK
EES	ETHERNET EXTENDER SUBSCRIBER
EEP	ETHERNET EXTENDER PROVIDER
OCC	OUTDOOR CATEGORY 5e CABLE
AT&T	AMERICAN TELEPHONE AND TELEGRAPH (TELEPHONE SERVICE PROVIDER)
SECU	SERIAL TO ETHERNET CONVERTOR UNIT

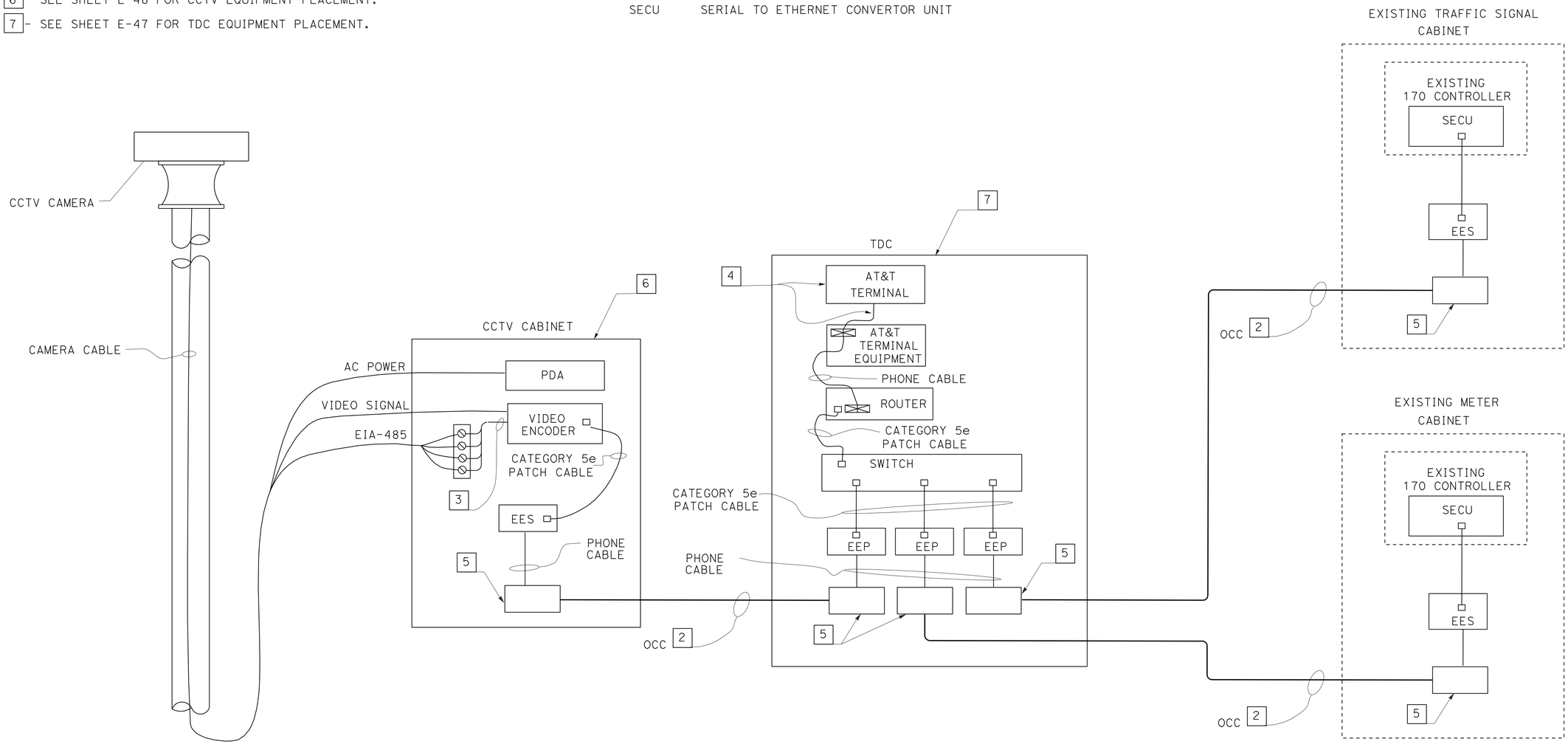

TDC TO CCTV EQUIPMENT CONNECTIONS

CCTV# 143 AND 145

APPROVED FOR ELECTRICAL WORK ONLY

NO SCALE

CLOSED CIRCUIT TELEVISION SYSTEM

(ELECTRICAL DETAILS)

E-46

STATE OF CALIFORNIA - DEPARTMENT OF TRANSPORTATION
Caltrans® **TRAFFIC ELECTRICAL**

FUNCTIONAL SUPERVISOR: DALE WILSON
CALCULATED-DESIGNED BY: HECTOR SANTAMARIA
CHECKED BY: ENRIQUE BERNAL
REVISED BY
DATE REVISED

LAST REVISION 09-26-11
DATE PLOTTED => 12-DEC-2011
TIME PLOTTED => 12:32

Dist	COUNTY	ROUTE	POST MILES TOTAL PROJECT	SHEET No.	TOTAL SHEETS
11	SD	54,805	1.8,5.5/9.4	464	635

Héctor A. Santamaría 08-25-11
REGISTERED ELECTRICAL ENGINEER DATE

12-5-11
PLANS APPROVAL DATE

REGISTERED PROFESSIONAL ENGINEER HECTOR A. SANTAMARIA No. 18207 Exp. 12-31-11 ELECTRICAL STATE OF CALIFORNIA

THE STATE OF CALIFORNIA OR ITS OFFICERS OR AGENTS SHALL NOT BE RESPONSIBLE FOR THE ACCURACY OR COMPLETENESS OF SCANNED COPIES OF THIS PLAN SHEET.

NOTES:

1 - THE CONTRACTOR SHALL VERIFY ALL CONTROLLING FIELD DIMENSIONS BEFORE ORDERING OR FABRICATING MATERIAL.

[2] - FILTERED VENTILATION LOUVERS.

[3] - EIA 19" RACK MOUNT SHELF REQUIRED FOR EQUIPMENT. 2" SPACE BETWEEN SHELF AND ENCLOSURE BACK WALL REQUIRED.

[4] - KEY LOCK AND AND THREE POINT LOCKING SYSTEM SHALL BE INTEGRATED WITH DOOR HANDLE. ROLLERS SHALL BE USED IN CONJUNCTION WITH THE THREE POINT LOCKING SYSTEM.

[5] - DOOR HINGE.

6 - SEE EQUIPMENT CONNECTION DIAGRAM.

7 - TYPE 5052-H32 ALUMINUM ENCLOSURE WALLS, DOORS AND SHELVES SHALL BE 1/8" THICK UNLESS OTHERWISE SHOWN.

[8] - ALUMINUM SHELF REQUIRED TO PROVIDE SEPARATION OF THE EQUIPMENT AND TELEPHONE COMPARTMENTS. THE SHELF EDGE SHALL EXTEND TO ALL FOUR ENCLOSURE WALLS. PLACE ONE 3" KNOCKOUT AT THE REAR OF THE CABINET SHELF.

[9] - DOOR HANDLE TO ENCLOSURE PADLOCK LATCH.

[10] - BACK MOUNTING BOARD (1/2" THICK AND GRADE ACX PLYWOOD).

[11] - TYPE 5052-H32 ALUMINUM SHALL BE 1/4" THICK, BOTTOM AND BACK WALL OF ENCLOSURE.

[12] - 12 PAIR TERMINAL BLOCK.

13 - POLICE DOOR NOT REQUIRED.

[14] - 19" EIA RACK RAIL.

[15] - KNOCKOUTS REQUIRED (3).

16 - GFCI RECEPTACLES ARE FOR MAINTENANCE EQUIPMENT ONLY.

17 - INSTALL CB INSIDE THE JUNCTION BOX. THE CB SHOULD BE OPERATED EXTERNALLY WITHOUT OPENING THE JUNCTION COVER. SEE WIRING DIAGRAM.

18 - FOR DETAILS NOT SHOWN SEE ES-3C (TYPE G). NOTES 1 TO 10, 12, 13, 15, 16, 17 AND 19 APPLY.

19 - CABINET SHALL BE FURNISHED WITH MOUNTING BOARDS, OUTLET BOXES, CB, AND OUTLET PLATES. DIMENSIONS ARE NOMINAL.

20 - FAN SHALL BE THERMASTATICALLY CONTROLLED AND ADJUSTABLE TO TURN ON BETWEEN 91 AND 149 DEGREES FARENHIET.

21 - FAN CAPACITY SHALL BE AT LEAST PER MINUTE

22 - FAN CIRCUIT SHALL BE FUSED AT 125 PERCENT OF THE FAN MOTOR CAPACITY.

23 - FASTEN FIXED MOUNTING PANEL WITH NUTS, LOCK AND FLAT WASHERS TO 1/4" x 1" STUDS WELDED TO ENCLOSURE.

[24] - BOTTOM SHELF.

[25] - SHELF SUPPORTS (2).

[26] - 110 PUNCH BLOCK WITH MODULAR 8P 8C JACK. QAUNTITY AS REQUIRED PER LOCATION.

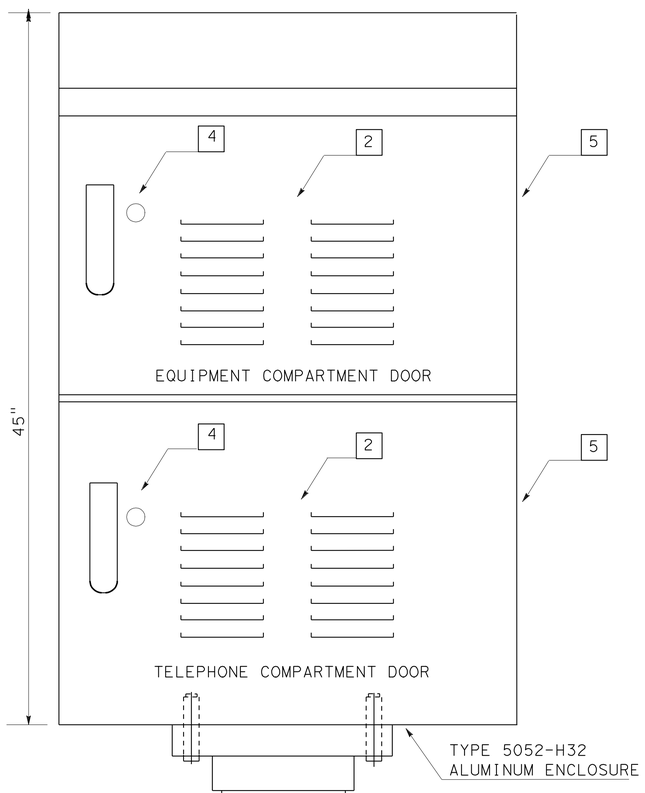

FRONT
(EXTERIOR)

APPROVED FOR ELECTRICAL WORK ONLY

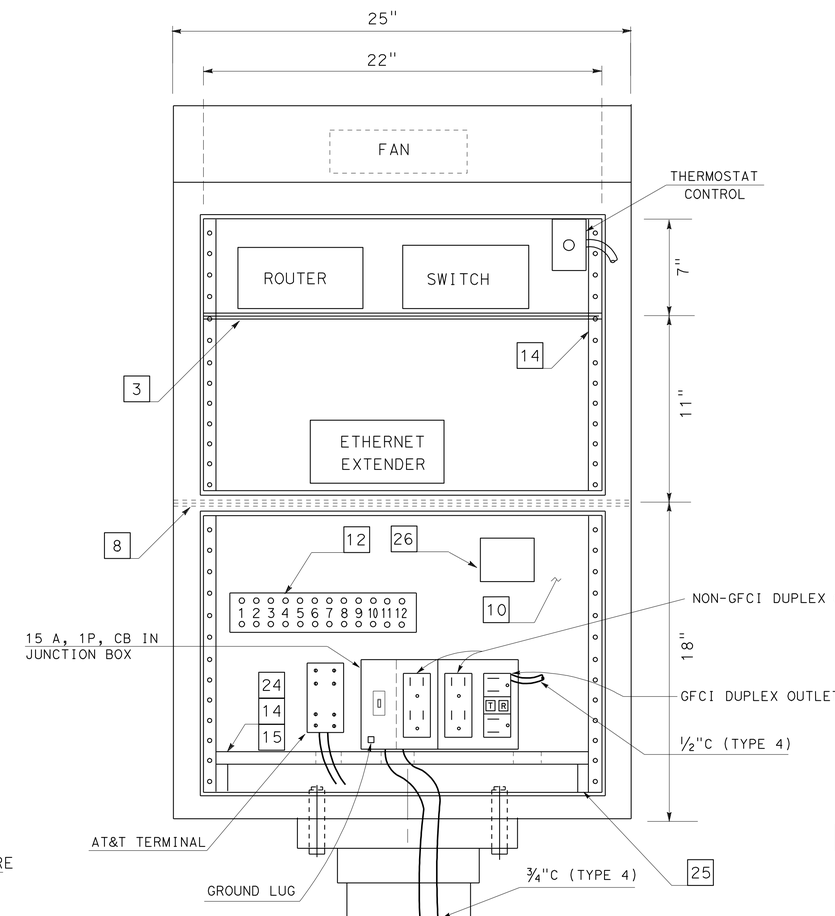

FRONT
(INTERIOR)

MODIFIED TYPE G

TDC

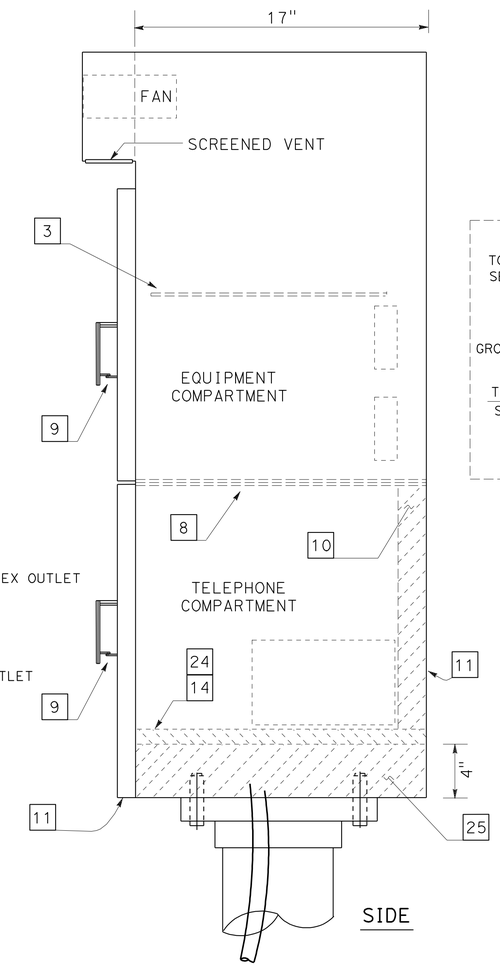

SIDE

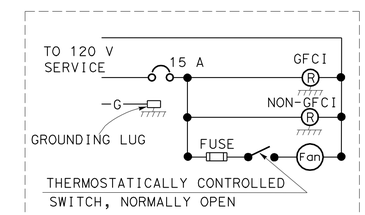

WIRING DIAGRAM

NO SCALE

CLOSED CIRCUIT TELEVISION SYSTEM
(ELECTRICAL DETAILS)

E-47

STATE OF CALIFORNIA - DEPARTMENT OF TRANSPORTATION
Caltrans® TRAFFIC ELECTRICAL

FUNCTIONAL SUPERVISOR: DALE WILSON
CALCULATED-DESIGNED BY: ENRIQUE BERNAL
CHECKED BY: HECTOR SANTAMARIA
REVISED BY / DATE REVISED

LAST REVISION 09-26-11
DATE PLOTTED => 12-DEC-2011
TIME PLOTTED => 07:32

Dist	COUNTY	ROUTE	POST MILES TOTAL PROJECT	SHEET No.	TOTAL SHEETS
11	SD	54,805	1.8,5.5/9.4	465	635

Héctor A. Santamaría 08-25-11
REGISTERED ELECTRICAL ENGINEER DATE

12-5-11
PLANS APPROVAL DATE

REGISTERED PROFESSIONAL ENGINEER
HECTOR A. SANTAMARIA
No. 18207
Exp. 12-31-11
ELECTRICAL
STATE OF CALIFORNIA

THE STATE OF CALIFORNIA OR ITS OFFICERS OR AGENTS SHALL NOT BE RESPONSIBLE FOR THE ACCURACY OR COMPLETENESS OF SCANNED COPIES OF THIS PLAN SHEET.

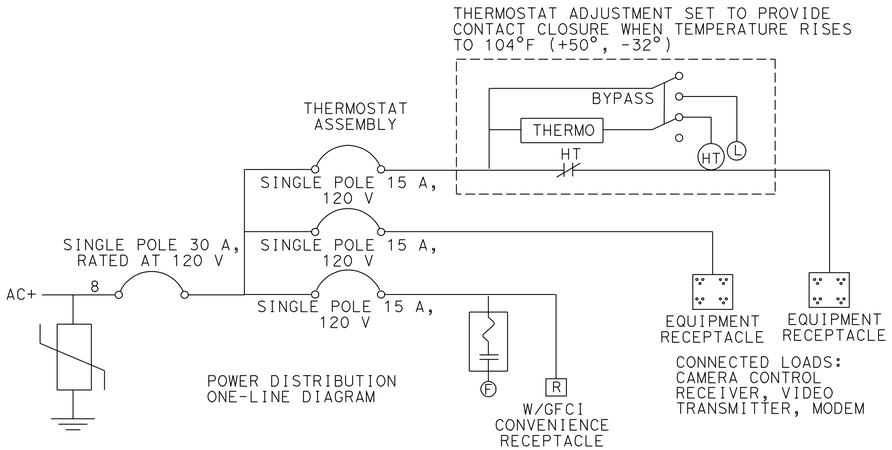

CCTV SYSTEM CABINET POWER DISTRIBUTION ASSEMBLY

LEGEND:

- □ - NETWORK PORT
- SECU - SERIAL ETHERNET CONVERSION UNIT
- (HT) RELAY COIL - HIGH TEMPERATURE
- HT RELAY CONTACT - NORMALLY CLOSED
- W\GFC1 WITH GROUND FAULT CURRENT INTERRUPT
- 8 WIRE SIZE, IF NOT INDICATED SHALL BE #12 AWG
- THERMO ADJUSTABLE CALIBRATED THERMOSTAT
- SURGE PROTECTOR
- CIRCUIT BREAKER
- (F) FAN
- (L) INDICATOR LAMP
- (R) DUPLEX RECEPTACLE
- THERMOSTATIC CONTROL

NOTES:

1. SHELF REQUIRED FOR EQUIPMENT.
2. INSTALL SECU IN 170 CONTROLLER CARD SLOT.
3. 110 PUNCH DOWN BLOCK/8P8C JACK.

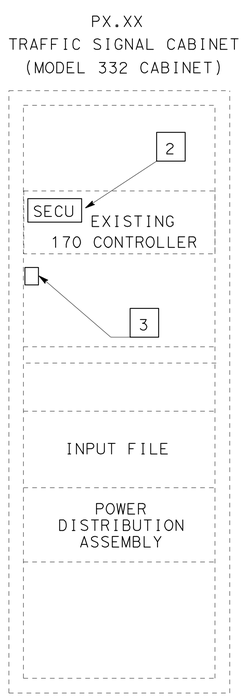

TRAFFIC SIGNAL CABINET EQUIPMENT PLACEMENT

DETAIL "SIG"

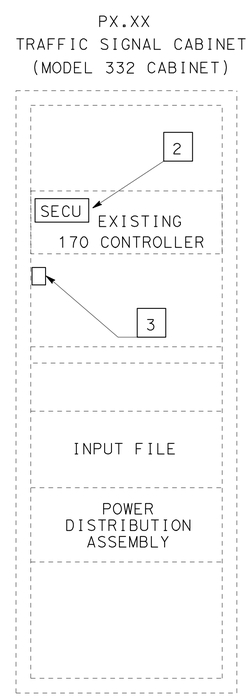

TRAFFIC SIGNAL CABINET EQUIPMENT PLACEMENT

DETAIL "SIG"

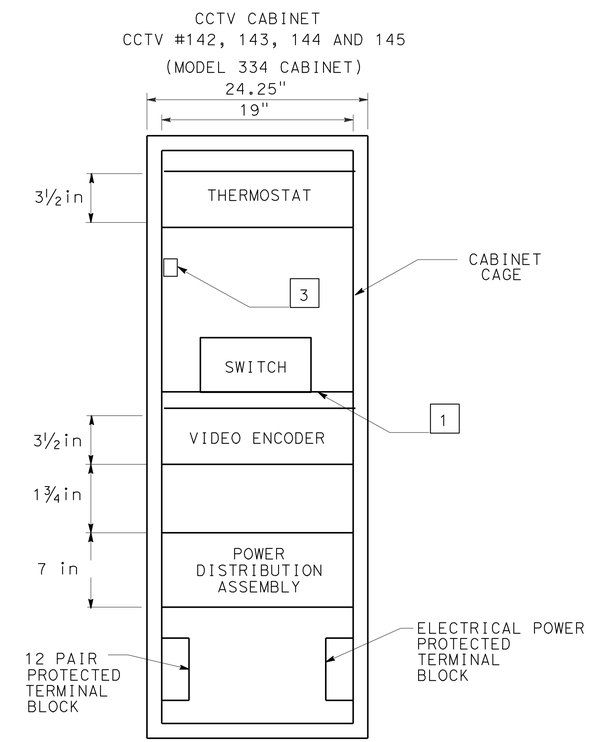

CCTV SYSTEM CABINET EQUIPMENT PLACEMENT

DETAIL "CCTV"

CLOSED CIRCUIT TELEVISION SYSTEM (ELECTRICAL DETAILS)

APPROVED FOR ELECTRICAL WORK ONLY

NO SCALE

E-48

STATE OF CALIFORNIA - DEPARTMENT OF TRANSPORTATION
Caltrans® TRAFFIC ELECTRICAL

FUNCTIONAL SUPERVISOR: DALE WILSON
CALCULATED-DESIGNED BY: HECTOR SANTAMARIA
CHECKED BY: ENRIQUE BERNAL
REVISED BY
DATE REVISED

LAST REVISION 09-26-11
DATE PLOTTED => 12-DEC-2011
TIME PLOTTED => 12:32

DIST	COUNTY	ROUTE	POST MILES TOTAL PROJECT	SHEET No	TOTAL SHEETS
11	SD	54,805	1.8,5.5/9.4	466	635

Eliseo Lopez 10-5-11
REGISTERED CIVIL ENGINEER DATE

12-5-11
PLANS APPROVAL DATE

REGISTERED PROFESSIONAL ENGINEER ELISEO LOPEZ No. C72910 Exp. 12/31/12 CIVIL STATE OF CALIFORNIA

The State of California or its officers or agents shall not be responsible for the accuracy or completeness of electronic copies of this plan sheet.

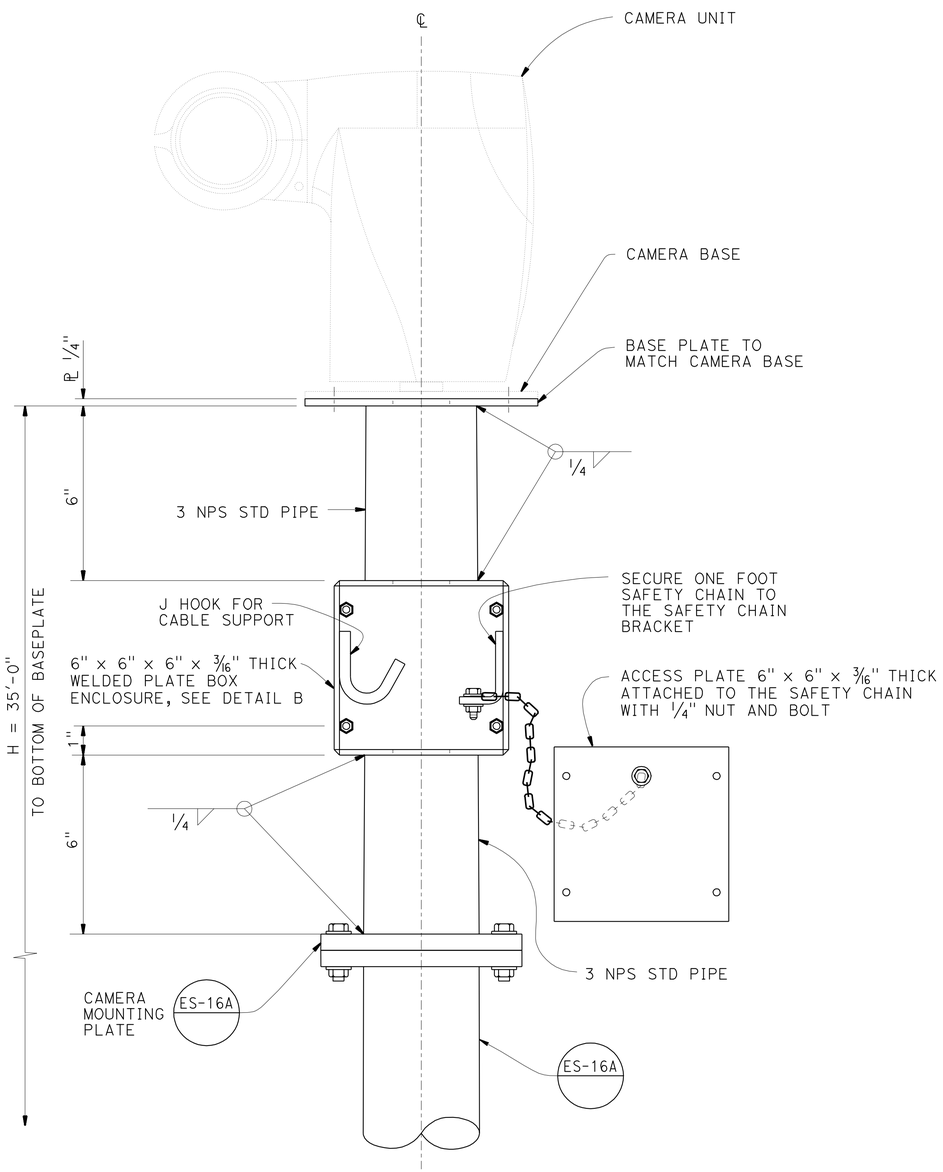

DETAIL A
MODIFIED CCTV 35 POLE

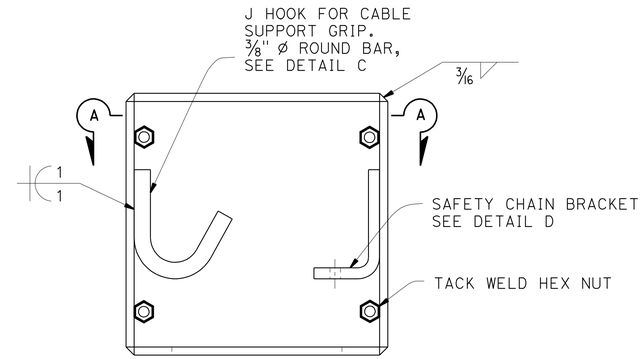

DETAIL B
BOX ENCLOSURE

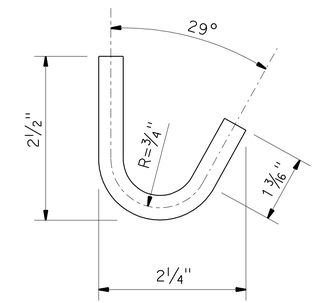

DETAIL C
J HOOK

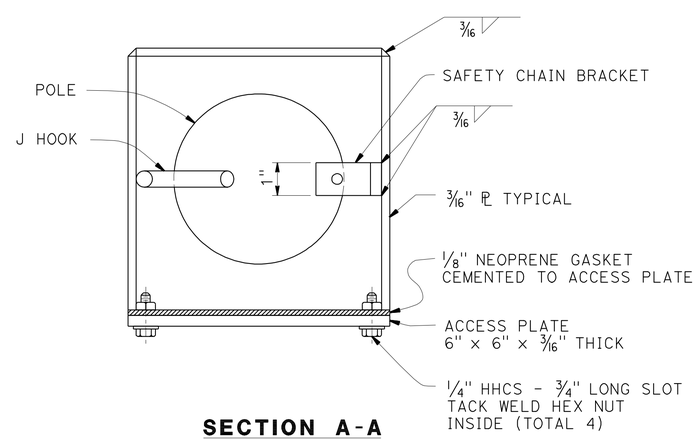

SECTION A-A

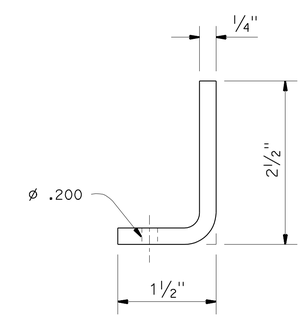

DETAIL D
SAFETY CHAIN BRACKET

NOTES:

1. For details not shown, See "2006 Standard Plans ES-16A" and "2006 Revised Standard Plans".

NOTE:
THE CONTRACTOR SHALL VERIFY ALL CONTROLLING FIELD DIMENSIONS BEFORE ORDERING OR FABRICATING ANY MATERIAL.

NO SCALE

BRANCH CHIEF JEFF WOODY	DESIGN	BY E LOPEZ	CHECKED D VORA
	DETAILS	BY D W JUSTICE Jr	CHECKED E LOPEZ
	QUANTITIES	BY	CHECKED

STATE OF CALIFORNIA
DEPARTMENT OF TRANSPORTATION

DIVISION OF ENGINEERING SERVICES
DESIGN AND TECHNICAL SERVICES
SPECIAL DESIGNS BRANCH A

BRIDGE NO. N/A
POST MILE

CLOSED CIRCUIT TELEVISION SYSTEM
CAMERA MOUNTING DETAILS

SES-1

(ENGLISH) SPECIAL DESIGNS BRANCH BORDER SHEET (REV. 7-1-09)

ORIGINAL SCALE IN INCHES FOR REDUCED PLANS 0 1 2 3

UNIT: 3619
PROJECT NUMBER & PHASE: 1100020050-1
CONTRACT NO.: 11-2T1811

DISREGARD PRINTS BEARING EARLIER REVISION DATES

REVISION DATES: ~~8-22-11~~ 8-29-11

SHEET OF

FILE => spec_des_br_prj/2011sd/11-2T1811/11-2t1811_ses1.dgn

USERNAME => s124196 DATE PLOTTED => 09-DEC-2011 TIME PLOTTED => 09:46

DIST	COUNTY	ROUTE	POST MILES TOTAL PROJECT	SHEET NO.	TOTAL SHEETS
11	SD	54,805	1.8,5.5/9.4	467	635

REGISTERED CIVIL ENGINEER

June 6, 2008
PLANS APPROVAL DATE

REGISTERED PROFESSIONAL ENGINEER
Donald E. Howe
No. C46402
Exp. 3-31-09
CIVIL
STATE OF CALIFORNIA

The State of California or its officers or agents shall not be responsible for the accuracy or completeness of electronic copies of this plan sheet.

To accompany plans dated 12-5-11

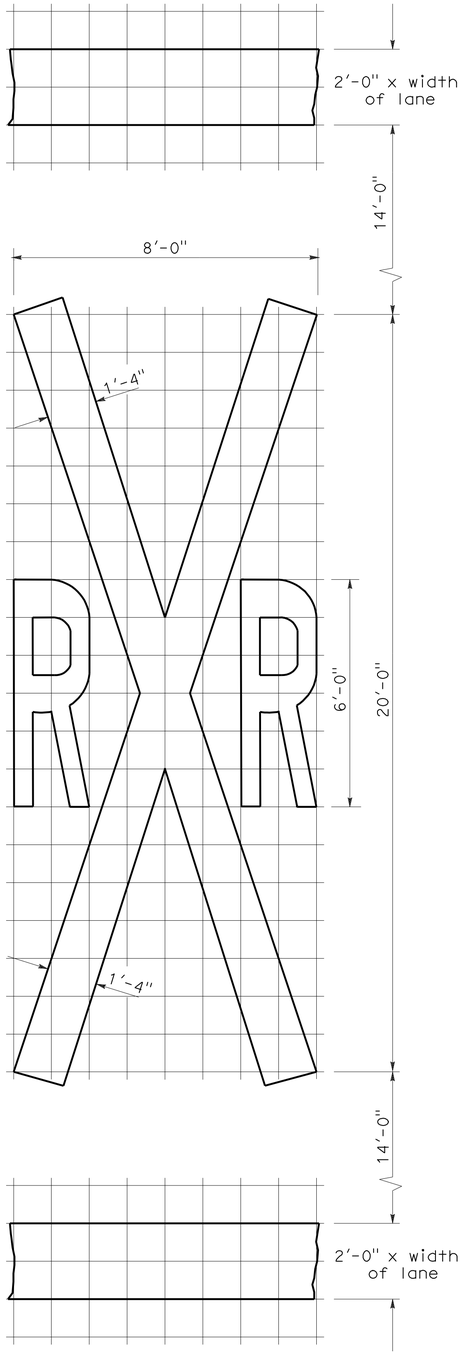

RAILROAD CROSSING SYMBOL

✳70 sq ft DOES NOT INCLUDE THE 2'-0" x VARIABLE WIDTH TRANSVERSE LINES.

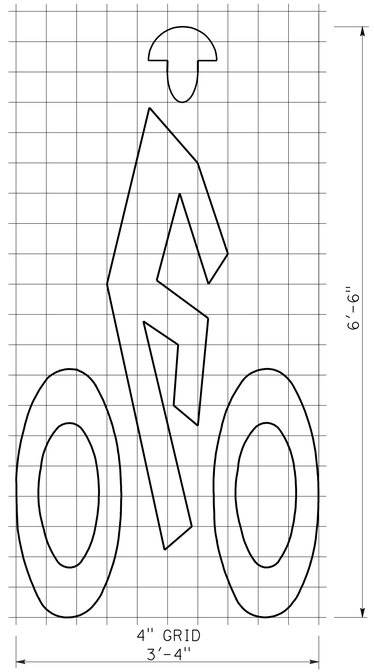

BIKE LANE SYMBOL

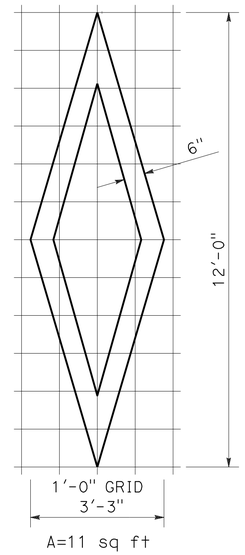

DIAMOND SYMBOL

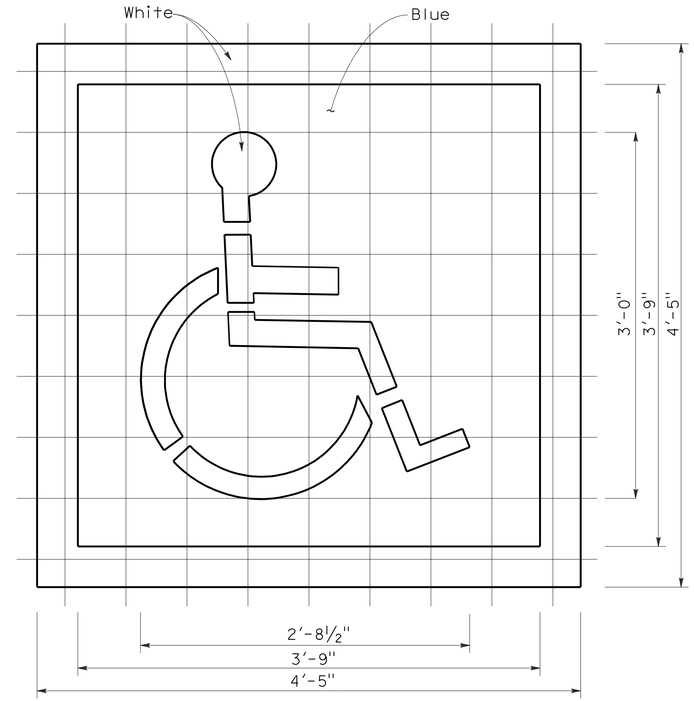

INTERNATIONAL SYMBOL OF ACCESSIBILITY MARKING

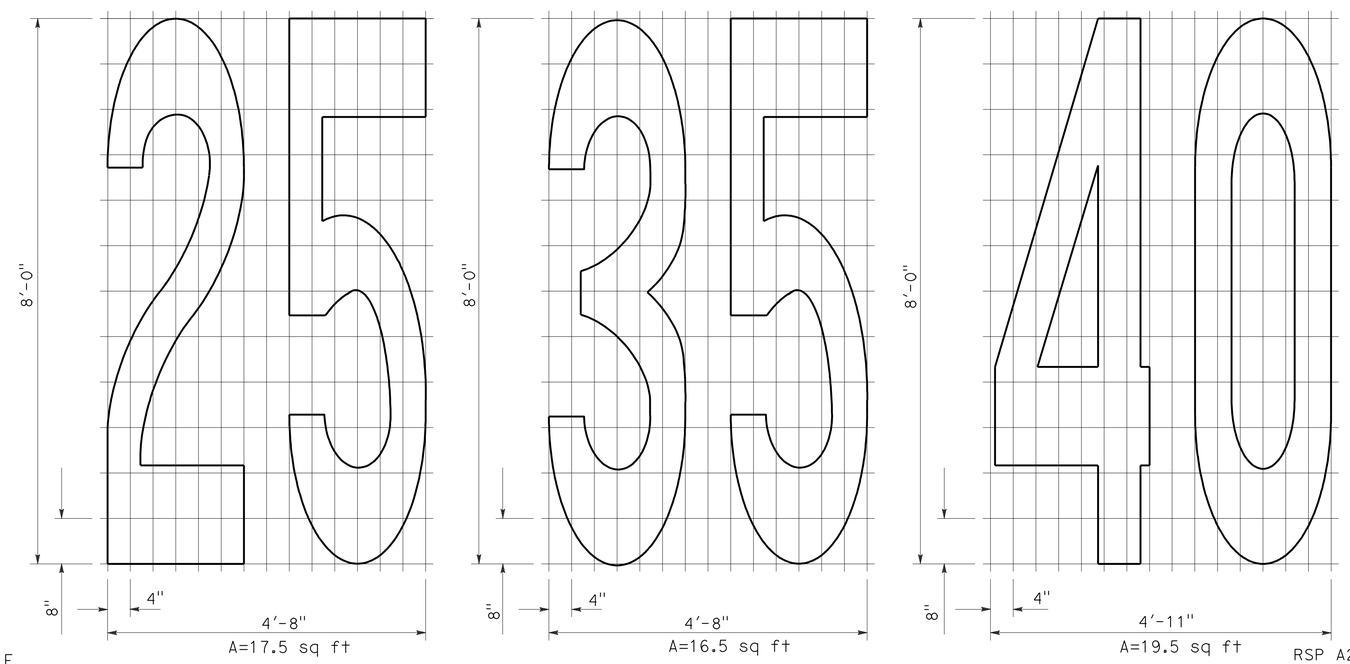

NUMERALS

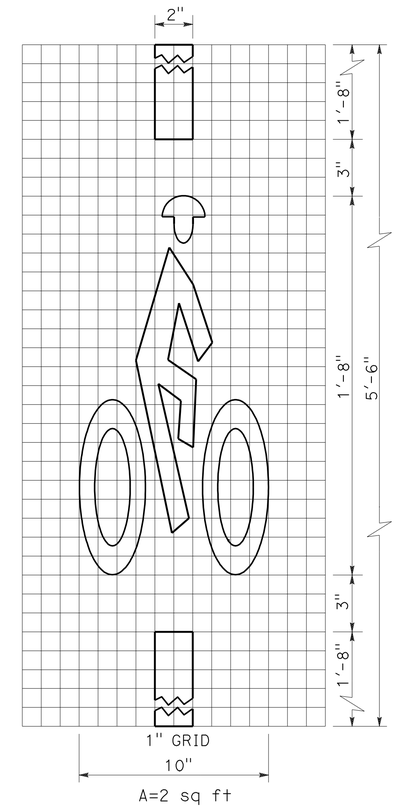

BICYCLE LOOP DETECTOR SYMBOL

NOTE:

1. Minor variations in dimensions may be accepted by the Engineer.

STATE OF CALIFORNIA
DEPARTMENT OF TRANSPORTATION

PAVEMENT MARKINGS SYMBOLS AND NUMERALS

NO SCALE

RSP A24C DATED JUNE 6, 2008 SUPERSEDES STANDARD PLAN A24C DATED MAY 1, 2006 - PAGE 11 OF THE STANDARD PLANS BOOK DATED MAY 2006.

REVISED STANDARD PLAN RSP A24C

2006 REVISED STANDARD PLAN RSP A24C

5-27-08

DIST	COUNTY	ROUTE	POST MILES TOTAL PROJECT	SHEET NO.	TOTAL SHEETS
11	SD	54,805	1.8,5.5/9.4	468	635

REGISTERED CIVIL ENGINEER

November 17, 2006
PLANS APPROVAL DATE

REGISTERED PROFESSIONAL ENGINEER Dallas Forester No. C37765 Exp. 12-31-06 CIVIL STATE OF CALIFORNIA

The State of California or its officers or agents shall not be responsible for the accuracy or completeness of electronic copies of this plan sheet.

To accompany plans dated 12-5-11

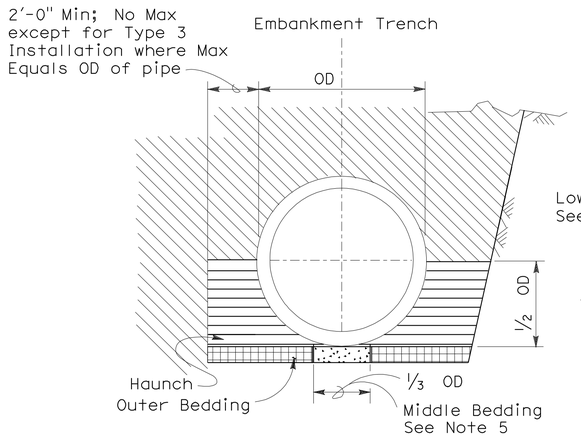

BACKFILL

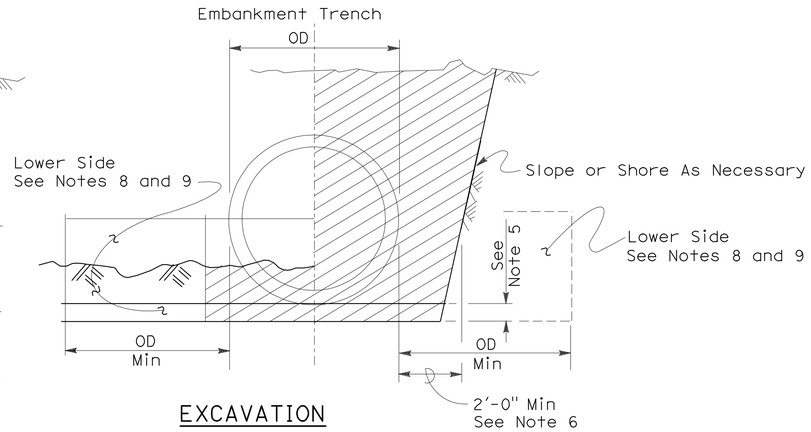

EXCAVATION

Roadway Embankment

Structure Backfill (Culvert) See Note 6

Structure Backfill (Culvert) See Note 6

Loose Backfill

Excavation Structure (Culvert)

TYPE 1 INSTALLATION:

The haunch and outer bedding shall be compacted to a minimum 90 percent relative compaction. In addition, the minimum sand equivalent in these areas shall be 30 and the maximum percentage passing the 75 μm sieve size shall be 12.

TYPE 2 INSTALLATION:

The haunch and outer bedding shall be compacted to a minimum 90 percent relative compaction. In addition, the minimum sand equivalent in these areas shall be 25.

TYPE 3 INSTALLATION:

The haunch and outer bedding shall be compacted to a minimum 85 percent relative compaction. 90 percent relative compaction will be required where the fill over the pipe is less than 4'-0" or 1/2 OD.

INSTALLATION TYPE 1

MINIMUM CLASS AND D-LOAD	COVER	
	108" Dia AND SMALLER	OVER 108" Dia
Class II 1000D	14.9'	12.9'
Class III 1350D	15.0' - 20.9'	13.0' - 18.9'
Class III Special 1700D	21.0' - 26.9'	19.0' - 24.9'
Class IV 2000D	27.0' - 31.9'	25.0' - 29.9'
Class IV Special 2500D	32.0' - 40.9'	30.0' - 38.9'
Class V 3000D	41.0' - 49.9'	39.0' - 46.9'
Class V Special 3600D	50.0' - 59.0'	47.0' - 58.0'

INSTALLATION TYPE 2

MINIMUM CLASS AND D-LOAD	COVER
Class II 1000D	9.9'
Class III 1350D	10.0'- 14.9'
Class III Special 1700D	15.0' - 19.9'
Class IV 2000D	20.0' - 24.9'
Class IV Special 2500D	25.0' - 31.9'
Class V 3000D	32.0' - 38.9'
Class V Special 3600D	39.0' - 47.0'

INSTALLATION TYPE 3

MINIMUM CLASS AND D-LOAD	COVER	
	48" Dia AND SMALLER	OVER 48" Dia
Class II 1000D	7.9'	5.9'
Class III 1350D	8.0' - 10.9'	6.0' - 8.9'
Class III Special 1700D	11.0' - 14.9'	9.0' - 12.9'
Class IV 2000D	15.0' - 17.9'	13.0' - 15.9'
Class IV Special 2500D	18.0' - 21.9'	16.0' - 19.9'
Class V 3000D	22.0' - 26.9'	20.0' - 24.9'
Class V Special 3600D	30.0' - 33.0'	25.0' - 31.0'

NOTES:

1. Unless otherwise shown on the plans or specified in the special provision, the Contractor shall have the option of selecting the class of RCP and the type of installation to be used, provided the height of cover does not exceed the value shown for the RCP selected.
   Example: 24" RCP culvert with maximum cover of 19'-0" the options are:
   a) Class III or stronger with Installation Type 1.
   b) Class III Special or stronger with Installation Type 2.
   c) Class IV Special or stronger with Installation Type 3.
   Cover is defined as the maximum vertical distance from top of the pipe to finished grade within the length of any given culvert.
2. The class of RCP and Installation Type selected shall be the same throughout the length of any given culvert.
3. The "length of any culvert" is defined as the culvert between:
   a) Successive drainage structure (inlets, junction boxes, headwalls, etc.).
   b) A drainage structure and the inlet or outlet end of the culvert.
   c) The inlet and outlet end of the culvert when there are no intervening drainage structures.
4. Oval and arch shaped RCP shall not be used.
5. 1/25 OD Min, not less than 3".
6. Slurry cement backfill may be substituted for backfill in the outer bedding and haunch areas. If slurry is used the outer and middle beddings shall be omitted. Prior to installation the soil under the middle 1/3 of the outside diameter of the pipe shall be softened by scarifying or other means to a minimum depth of 1/25 OD, but not less than 3". Where slurry cement backfill is used clear distance to trench wall may be reduced as set forth in Section 19-3.062 of the Standard Specifications.
7. Backfill shall be placed full width of excavation except where dimensions are shown for backfill width or thickness. Dimensions shown are minimums.
8. Lower side shall be suitable material as determined by the Engineer. Otherwise it shall be considered unsuitable as set forth in Section 19-2.02 of the Standard Specifications. See Note 9.
9. Where the pipe is placed in a trench, if the trench walls are sloped at 5 vertical to 1 horizontal or steeper for at least 90 percent of the trench height or up to not less than 12" from the grading plane, the firmness of the soil in the lower side need not be considered.
10. Non-reinforced precast concrete pipe sizes 3'-0" or smaller may be placed under installation Types 1, 2 or 3.

STATE OF CALIFORNIA
DEPARTMENT OF TRANSPORTATION

EXCAVATION AND BACKFILL CONCRETE PIPE CULVERTS

NO SCALE

RSP A62DA DATED NOVEMBER 17, 2006 SUPERSEDES STANDARD PLAN A62DA DATED MAY 1, 2006 - PAGE 20 OF THE STANDARD PLANS BOOK DATED MAY 2006.

REVISED STANDARD PLAN RSP A62DA

2006 REVISED STANDARD PLAN RSP A62DA

10-26-06

DIST	COUNTY	ROUTE	POST MILES TOTAL PROJECT	SHEET NO.	TOTAL SHEETS
11	SD	54,805	1.8,5.5/9.4	469	635

Mark S. Turner
PROFESSIONAL LAND SURVEYOR

June 30, 2006
PLANS APPROVAL DATE

LICENSED LAND SURVEYOR
Mark S. Turner
No. 6228
Exp. 3-31-08
STATE OF CALIFORNIA

The State of California or its officers or agents shall not be responsible for the accuracy or completeness of electronic copies of this plan sheet.

To accompany plans dated 12-5-11

2006 REVISED STANDARD PLAN RSP A74

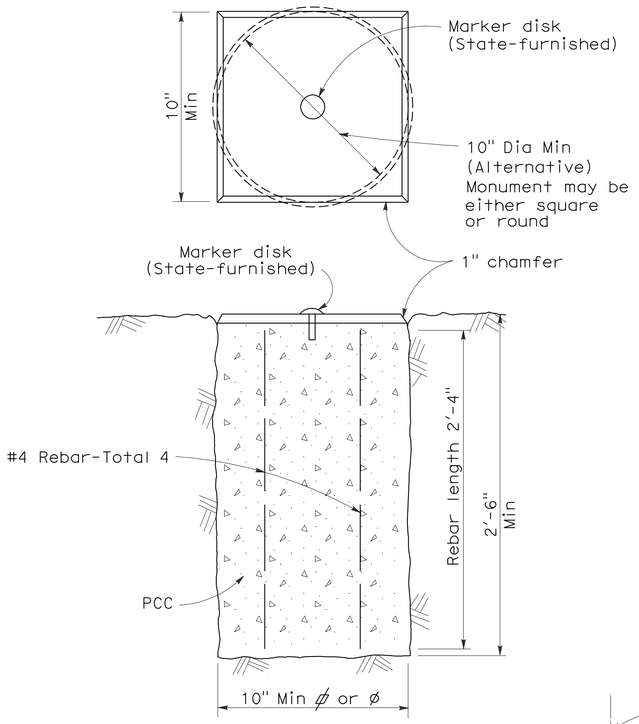

TYPE A

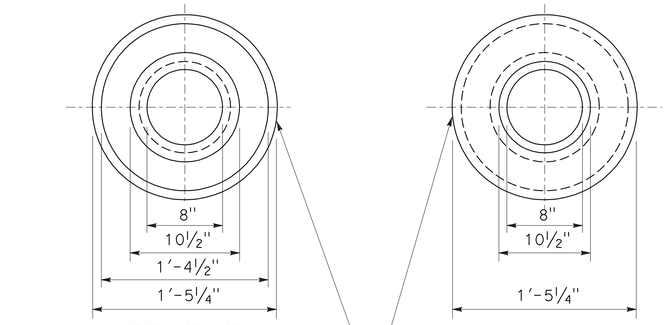

TOP VIEW OF
MONUMENT OF WELL RING

BOTTOM VIEW OF
MONUMENT OF WELL RING

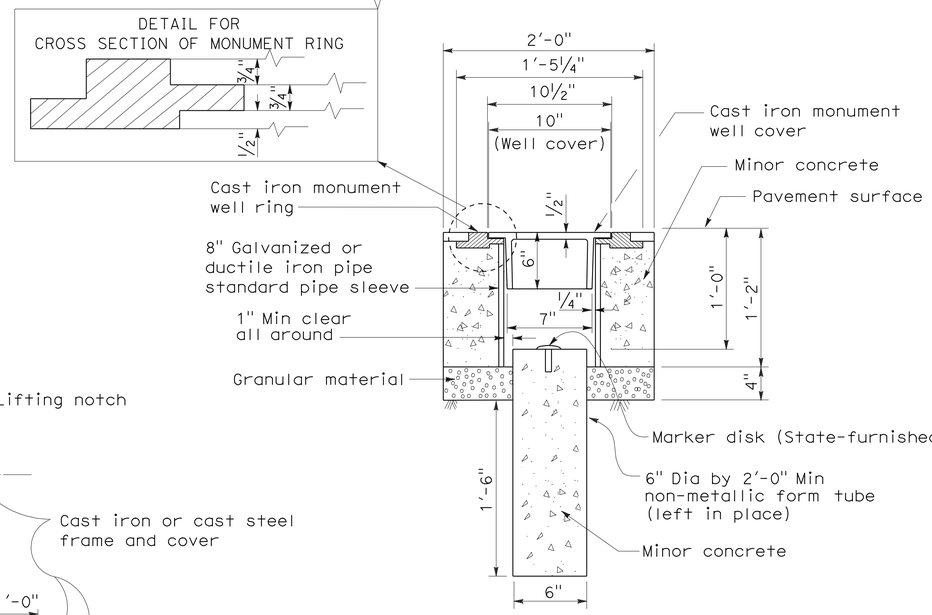

TYPE B

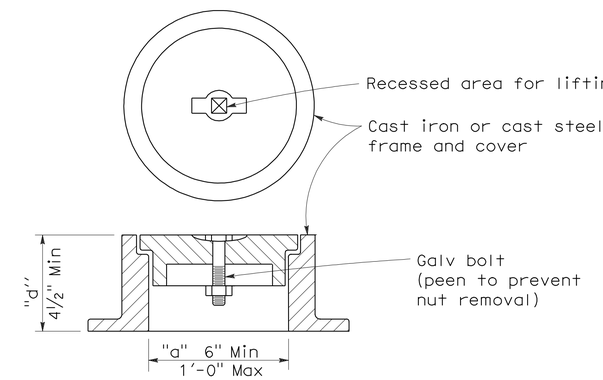

NOTES:

1. The configuration of the cast iron or cast steel frame and cover may vary from that shown.
2. Frame shall be embedded in the concrete a minimum of 3".
3. Type D monument shall be either Alternative No. 1 or Alternative No. 2 at the contractor's option.
4. All portland cement concrete shall be Class 2 or minor concrete with 1" maximum aggregate.

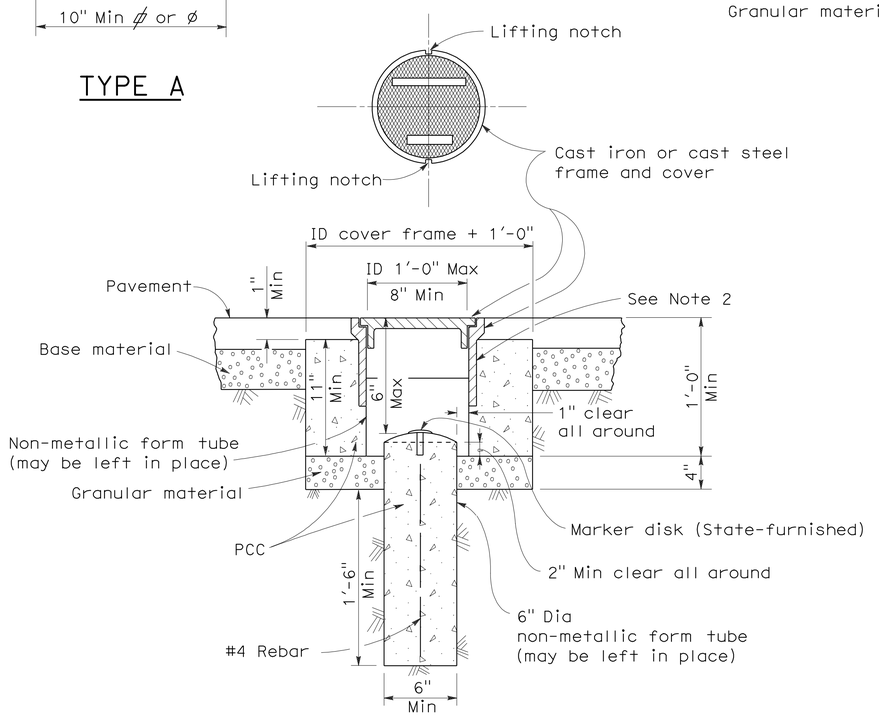

TYPE D
Alternative No. 1

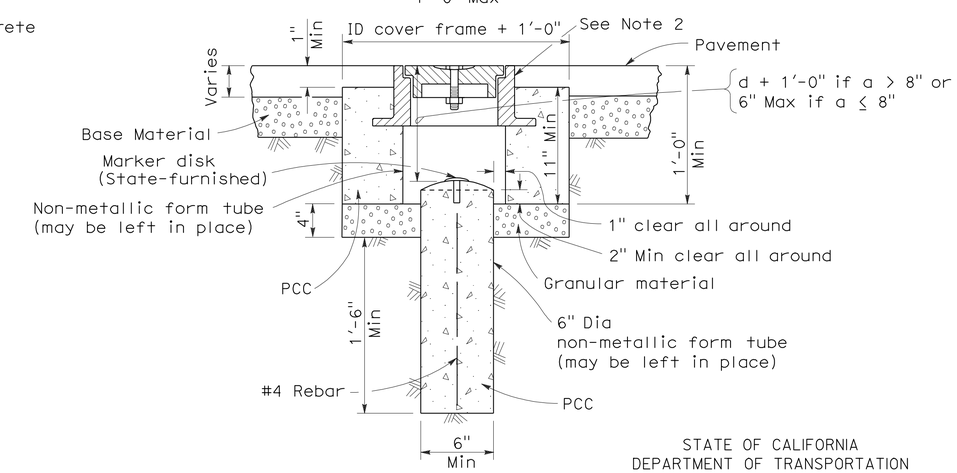

TYPE D
Alternative No. 2

STATE OF CALIFORNIA
DEPARTMENT OF TRANSPORTATION

SURVEY MONUMENTS

NO SCALE

RSP A74 DATED JUNE 30, 2006 SUPERSEDES STANDARD PLAN DATED MAY 1, 2006 - PAGE 28 OF THE STANDARD PLANS BOOK DATED MAY 2006.

REVISED STANDARD PLAN RSP A74

5-24-06

DIST	COUNTY	ROUTE	POST MILES TOTAL PROJECT	SHEET NO.	TOTAL SHEETS
11	SD	54,805	1.8,5.5/9.4	470	635

Randell D. Hiatt
REGISTERED CIVIL ENGINEER

June 6, 2008
PLANS APPROVAL DATE

REGISTERED PROFESSIONAL ENGINEER
Randell D. Hiatt
No. C50200
Exp. 6-30-09
CIVIL
STATE OF CALIFORNIA

The State of California or its officers or agents shall not be responsible for the accuracy or completeness of electronic copies of this plan sheet.

To accompany plans dated 12-5-11

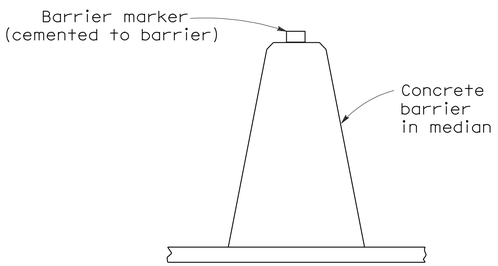

CONCRETE BARRIER TYPE 60 DELINEATION

See Notes 7 and 8

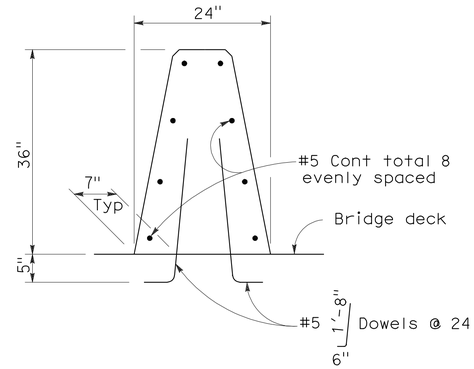

CONCRETE BARRIER TYPE 60A

Details similar to Type 60 except as noted.

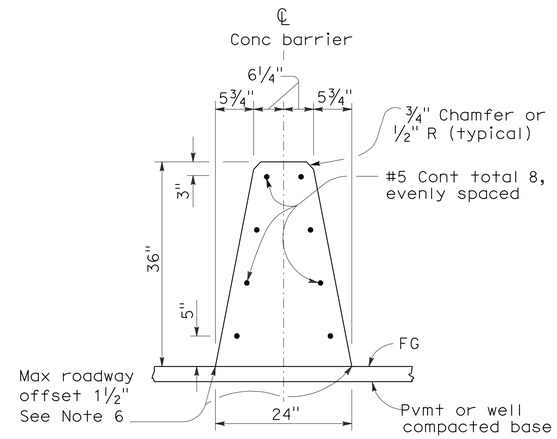

CONCRETE BARRIER TYPE 60

NOTES:

1. See Standard Plan A76B for details of Concrete Barrier Type 60 end anchors, connection to structures and transitions to Concrete Barrier Type 50 and Concrete Barrier Type 60S.
2. See Standard Plan A76C for Concrete Barrier Type 60 transitions at bridge column and sign pedestals.
3. Where glare screen is required on Concrete Barrier Type 60, use Concrete Barrier Type 60G.
4. Where the concrete barrier is added to the face of existing concrete structure, match existing weep holes.
5. Expansion joints in concrete barrier shall be located at all deck, pavement and principal wall joints. Expansion joint filler material shall be the same size as joint or ½" minimum.
6. Where roadway offset is greater than 1½", see Concrete Barrier Type 60C.
7. Barrier delineation to be used when required by the Special Provisions.
8. Spacing of barrier markers to match spacing of raised pavement markers on the adjacent median edgeline pavement delineation.
9. Reinforcing stirrup not required for roadway offsets less than 1'-0".
10. For roadway surfaces offset greater than 1½" to 3", no rebars required. For roadway surfaces offset greater than 3" to 8" use two #4 rebars at 3" above the lower roadway surface. For roadway surfaces offset greater than 8" to 12", use two #4 rebars at 3" above the lower roadway surface and two #4 rebars at 8" above the lower roadway surface. For roadway surfaces offset greater than 12" to 36", use two #4 rebars at 3" above the lower roadway surface and two #4 rebars at every 8" increment vertical spacing above the first two #4 rebars.

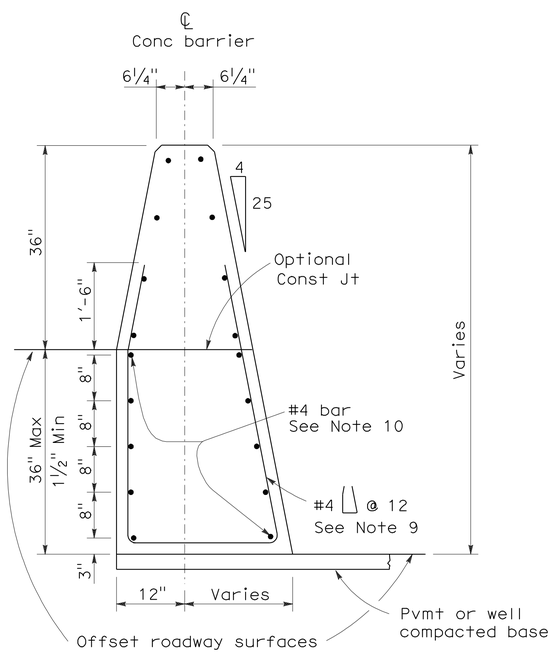

CONCRETE BARRIER TYPE 60C

Details similar to Type 60 except as noted.
Concrete barrier end anchor when necessary.
36" roadway surfaces offset shown.

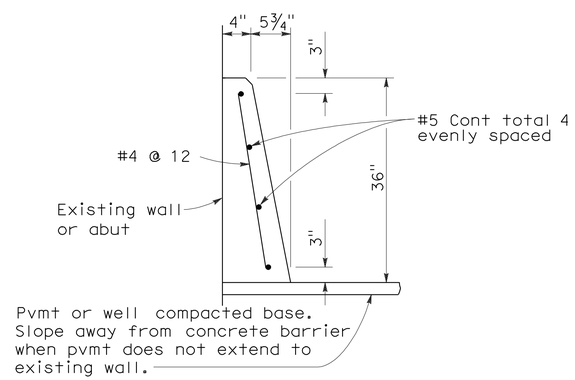

CONCRETE BARRIER TYPE 60D

STATE OF CALIFORNIA
DEPARTMENT OF TRANSPORTATION

CONCRETE BARRIER TYPE 60

NO SCALE

RSP A76A DATED JUNE 6, 2008 SUPERSEDES STANDARD PLAN A76A
DATED MAY 1, 2006 - PAGE 29 OF THE STANDARD PLANS BOOK DATED MAY 2006.

REVISED STANDARD PLAN RSP A76A

2006 REVISED STANDARD PLAN RSP A76A

5-21-08

Dist	COUNTY	ROUTE	POST MILES TOTAL PROJECT	SHEET No.	TOTAL SHEETS
11	SD	54,805	1.8,5.5/9.4	471	635

Randell D. Hiatt
REGISTERED CIVIL ENGINEER

May 20, 2011
PLANS APPROVAL DATE

REGISTERED PROFESSIONAL ENGINEER
Randell D. Hiatt
No. C50200
Exp. 6-30-11
CIVIL
STATE OF CALIFORNIA

The State of California or its officers or agents shall not be responsible for the accuracy or completeness of electronic copies of this plan sheet.

To accompany plans dated 12-5-11

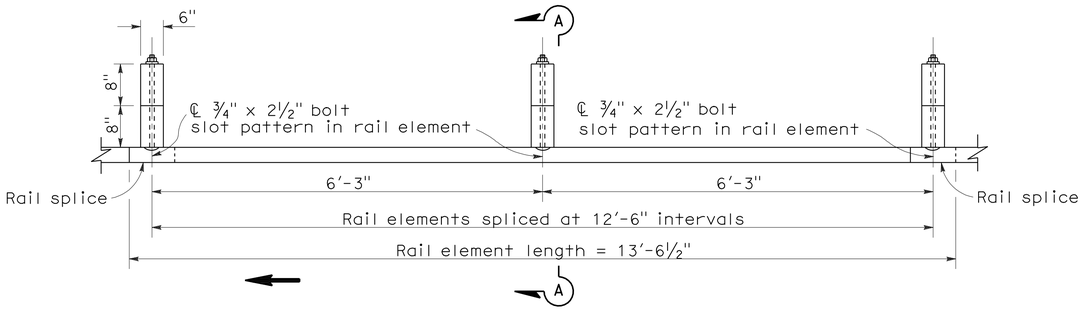

PLAN

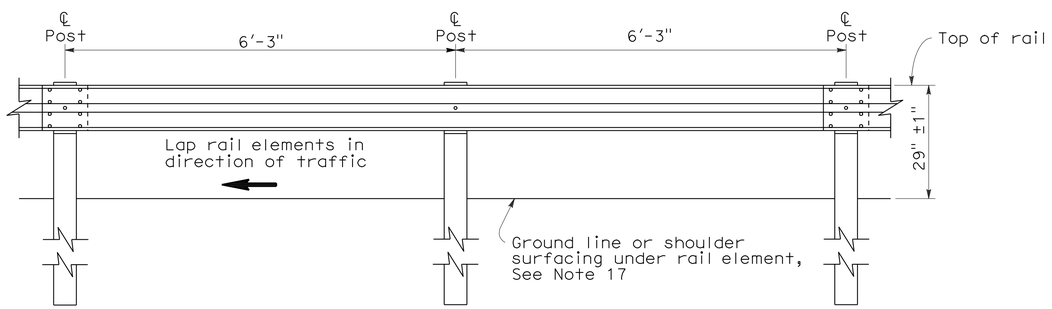

ELEVATION

METAL BEAM GUARD RAILING WITH WOOD POST AND BLOCKS

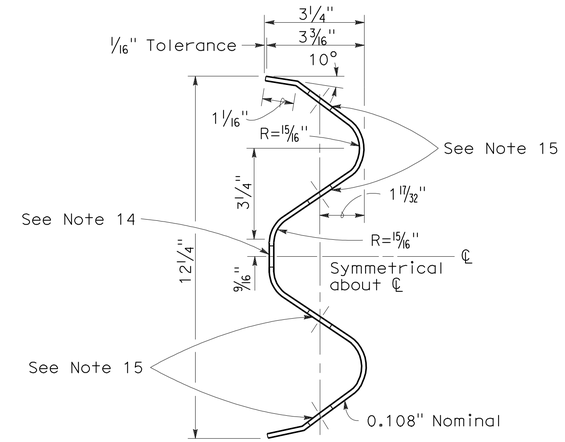

SECTION THRU RAIL ELEMENT

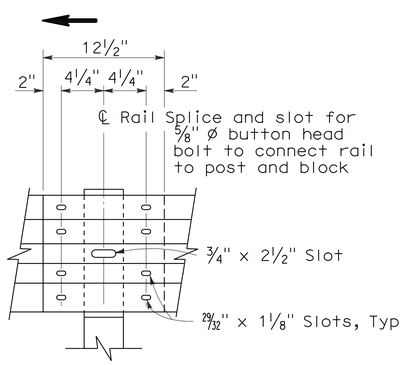

ELEVATION

RAIL ELEMENT SPLICE DETAIL

a) Connect the over lapped end of the rail elements with ⅝" ø x 1⅜" button head oval shoulder splice bolts inserted into the 29⁄32" x 1⅛" slots and bolted together with ⅝" ø recessed hex nuts. Recess of hex nut points toward rail element. A total of 8 bolts and nuts are to be used at each rail splice connection.

b) The ends of the rail elements are to be overlapped in the direction of traffic (see details).

c) Where end cap is to be attached to the end of a rail element, a total of 4 of the above described splice bolts and nuts are to be used.

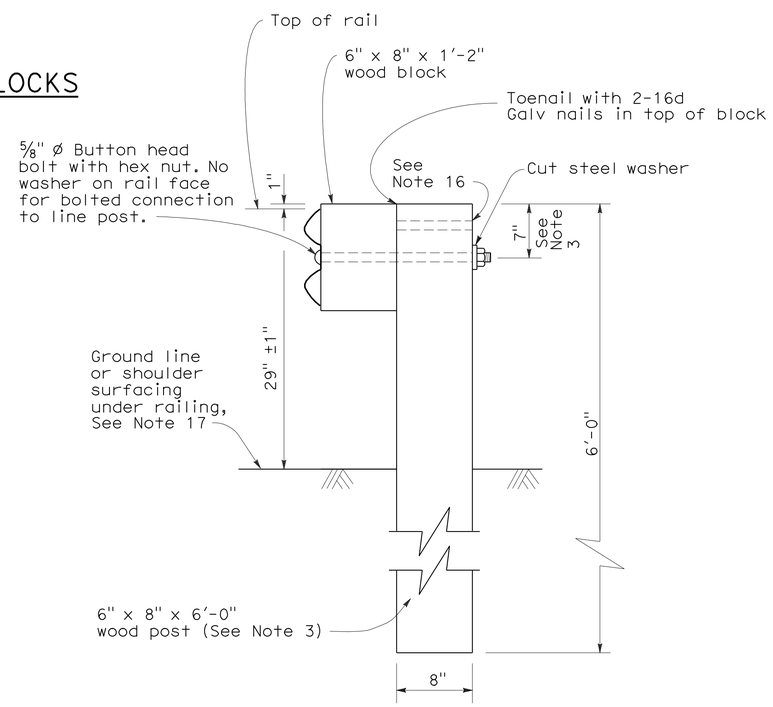

SECTION A-A

TYPICAL WOOD LINE POST INSTALLATION

See Note 4

NOTES:

1. For details of steel post installations, see Standard Plan A77A2.
2. For details of standard hardware used to construct guard railing, see Standard Plan A77B1.
3. For details of wood posts and wood blocks used to construct guard railing, see Standard Plan A77C1.
4. For additional installation details, see Standard Plan A77C3.
5. Guard railing post spacing to be 6'-3" center to center, except as otherwise noted.
6. For guard railing typical layouts, see the A77E, A77F and A77G Series of Standard Plans.
7. For terminal system end treatment details, see the A77L Series of Standard Plans. To connect railing to terminal system end treatment, transition the top of railing height at a ratio of 120:1 to terminal system end treatment height plus one 12'-6" standard railing section at the transitioned height for a horizontal connection to the end treatment.
8. For guard railing end anchor details, see Standard Plans A77H1 and A77I2.
9. For details of guard railing transition to bridge railing, see Standard Plan A77J4.
10. For additional details of guard railing connection to bridge railings, see Standard Plans A77J1, A77J2 and A77K1.
11. For guard railing connection details to abutments and walls, see Standard Plan A77J3.
12. Direction of adjacent traffic indicated by ➡.
13. For typical guard railing delineation and dike positioning details, see Standard Plan A77C4.
14. Slotted hole for bolted connection of rail element to block and post. See "Section Thru Rail Element".
15. Slotted holes for splice bolts to overlap ends of rail element. See "Section Thru Rail Element".
16. Additional hole in uppermost portion of line post is for potential future adjustments of railing height. See Standard Plan A77C1.
17. Install posts in soil.

STATE OF CALIFORNIA
DEPARTMENT OF TRANSPORTATION

METAL BEAM GUARD RAILING STANDARD RAILING SECTION (WOOD POST WITH WOOD BLOCK)

NO SCALE

RSP A77A1 DATED MAY 20, 2011 SUPERSEDES STANDARD PLAN A77A1 DATED MAY 1, 2006 - PAGE 41 OF THE STANDARD PLANS BOOK DATED MAY 2006.

REVISED STANDARD PLAN RSP A77A1

2006 REVISED STANDARD PLAN RSP A77A1

3-10-11

Dist	COUNTY	ROUTE	POST MILES TOTAL PROJECT	SHEET No.	TOTAL SHEETS
11	SD	54,805	1.8,5.5/9.4	472	635

Randell D. Hiatt
REGISTERED CIVIL ENGINEER

May 20, 2011
PLANS APPROVAL DATE

REGISTERED PROFESSIONAL ENGINEER
Randell D. Hiatt
No. C50200
Exp. 6-30-11
CIVIL
STATE OF CALIFORNIA

The State of California or its officers or agents shall not be responsible for the accuracy or completeness of electronic copies of this plan sheet.

To accompany plans dated 12-5-11

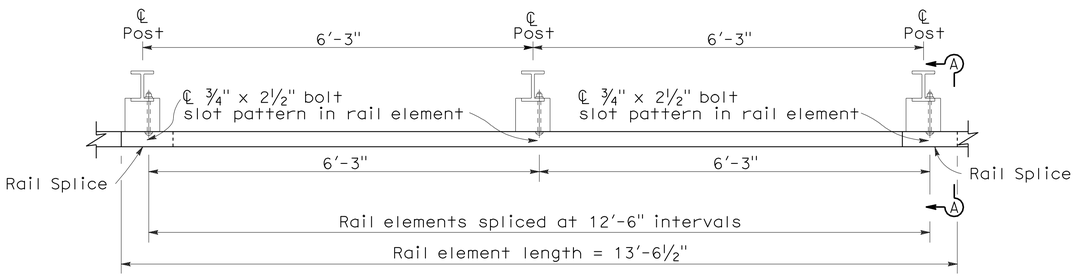

PLAN

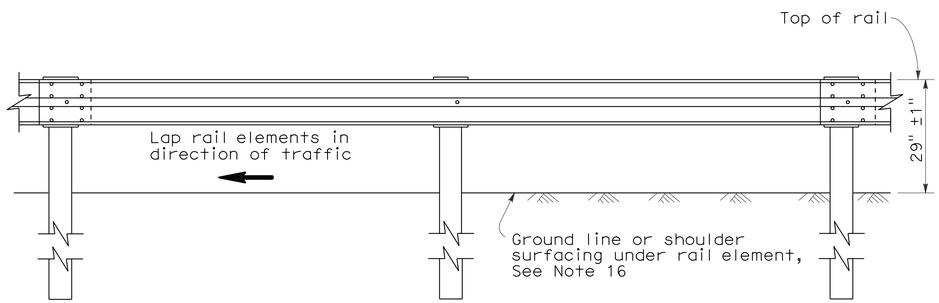

ELEVATION

METAL BEAM GUARD RAILING WITH STEEL POSTS AND NOTCHED WOOD OR NOTCHED RECYCLED PLASTIC BLOCKS

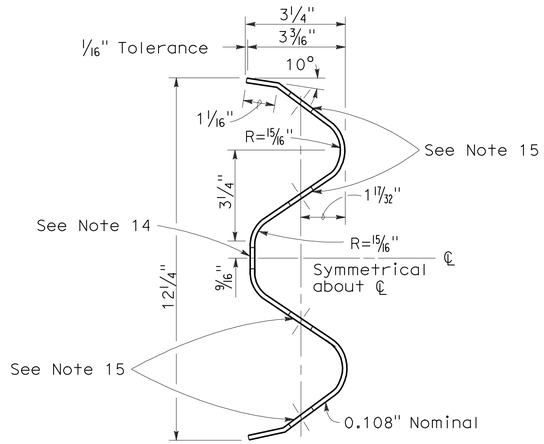

SECTION THRU RAIL ELEMENT

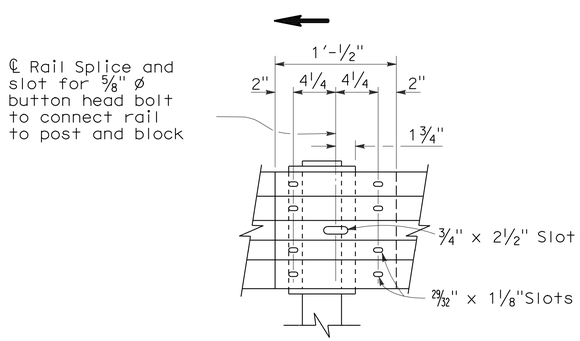

ELEVATION

RAIL ELEMENT SPLICE DETAIL

a) Connect the over lapped end of the rail elements with ⅝" ø x 1⅜" button head oval shoulder splice bolts inserted into the 29/32" x 1⅛" slots and bolted together with ⅝" ø recessed hex nuts. Recess of hex nut points toward rail element. A total of 8 bolts and nuts are to be used at each rail splice connection.

b) The ends of the rail elements are to be overlapped in the direction of traffic (see details).

c) Where end cap is to be attached to the end of a rail element, a total of 4 of the above described splice bolts and nuts are to be used.

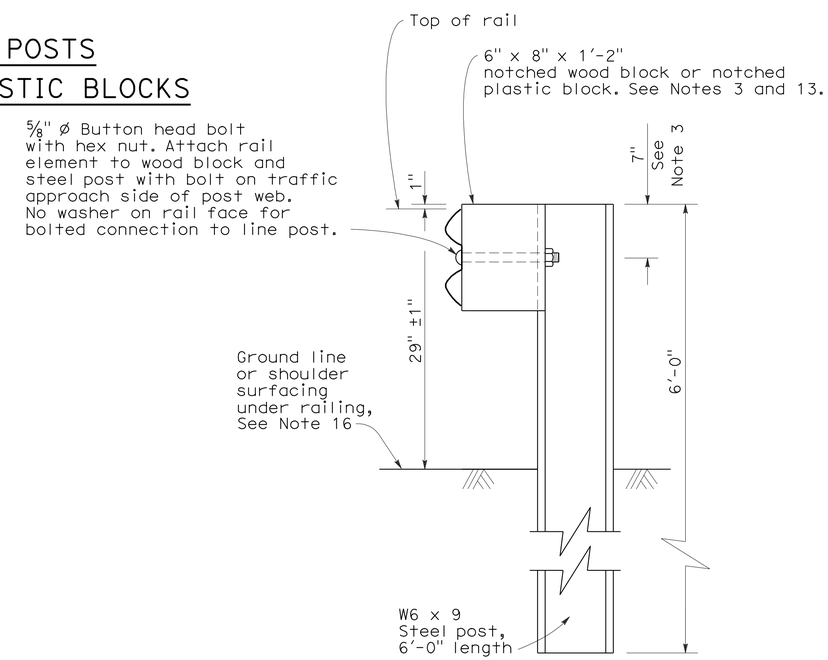

SECTION A-A

TYPICAL STEEL LINE POST INSTALLATION

See Note 4

NOTES:

1. For details of wood post installations, see Standard Plan A77A1.
2. For details of standard hardware used to construct guard railing, see Standard Plan A77B1.
3. For details of steel posts and notched wood blocks used to construct guard railing, see Standard Plan A77C2.
4. For additional installation details, see Standard Plan A77C3.
5. Guard railing post spacing to be 6'-3" center to center, except as otherwise noted.
6. For guard railing typical layouts, see the A77E, A77F and A77G Series of Standard Plans.
7. For terminal system end treatment details, see the A77L Series of Standard Plans. To connect railing to terminal system end treatment, transition the top of railing height at a ratio of 120:1 to terminal system end treatment height plus one 12'-6" standard railing section at the transitioned height for a horizontal connection to the end treatment.
8. For guard railing end anchor details, see Standard Plans A77H1 and A77I2.
9. For details of guard railing transition to bridge railing, see Standard Plan A77J4.
10. For additional details of guard railing connection to bridge railings, see Standard Plans A77J1, A77J2 and A77K1.
11. For dike positioning and guard railing delineation details, see Standard Plan A77C4.
12. Direction of adjacent traffic indicated by → .
13. Notched face of block faces steel post.
14. Slotted hole for bolted connection of rail element to block and post. See "Section Thru Rail Element".
15. Slotted holes for splice bolts to overlap ends of rail element. See "Section Thru Rail Element".
16. Install posts in soil.

STATE OF CALIFORNIA
DEPARTMENT OF TRANSPORTATION

METAL BEAM GUARD RAILING STANDARD RAILING SECTION (STEEL POST WITH NOTCHED WOOD OR NOTCHED RECYCLED PLASTIC BLOCK)

NO SCALE

RSP A77A2 DATED MAY 20, 2011 SUPERSEDES STANDARD PLAN A77A2 DATED MAY 1, 2006 - PAGE 42 OF THE STANDARD PLANS BOOK DATED MAY 2006.

REVISED STANDARD PLAN RSP A77A2

2006 REVISED STANDARD PLAN RSP A77A2

5-4-11

To accompany plans dated 12-5-11

Dist	COUNTY	ROUTE	POST MILES TOTAL PROJECT	SHEET No.	TOTAL SHEETS
11	SD	54,805	1.8,5.5/9.4	473	635

Randell D. Hiatt
REGISTERED CIVIL ENGINEER

May 20, 2011
PLANS APPROVAL DATE

REGISTERED PROFESSIONAL ENGINEER
Randell D. Hiatt
No. C50200
Exp. 6-30-11
CIVIL
STATE OF CALIFORNIA

The State of California or its officers or agents shall not be responsible for the accuracy or completeness of electronic copies of this plan sheet.

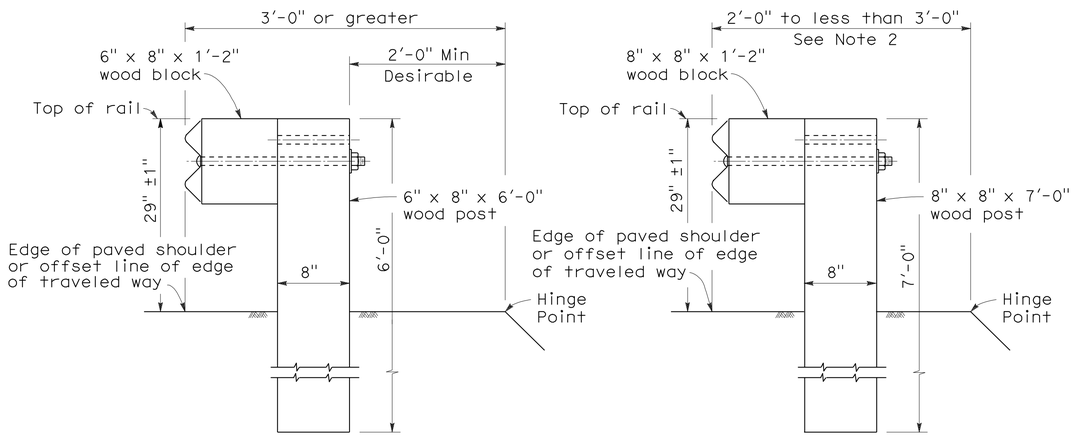

DETAIL A
TYPICAL ROADWAY INSTALLATION
See Note 1

DETAIL B
NARROW ROADWAY INSTALLATION
See Note 1

POST EMBEDMENT

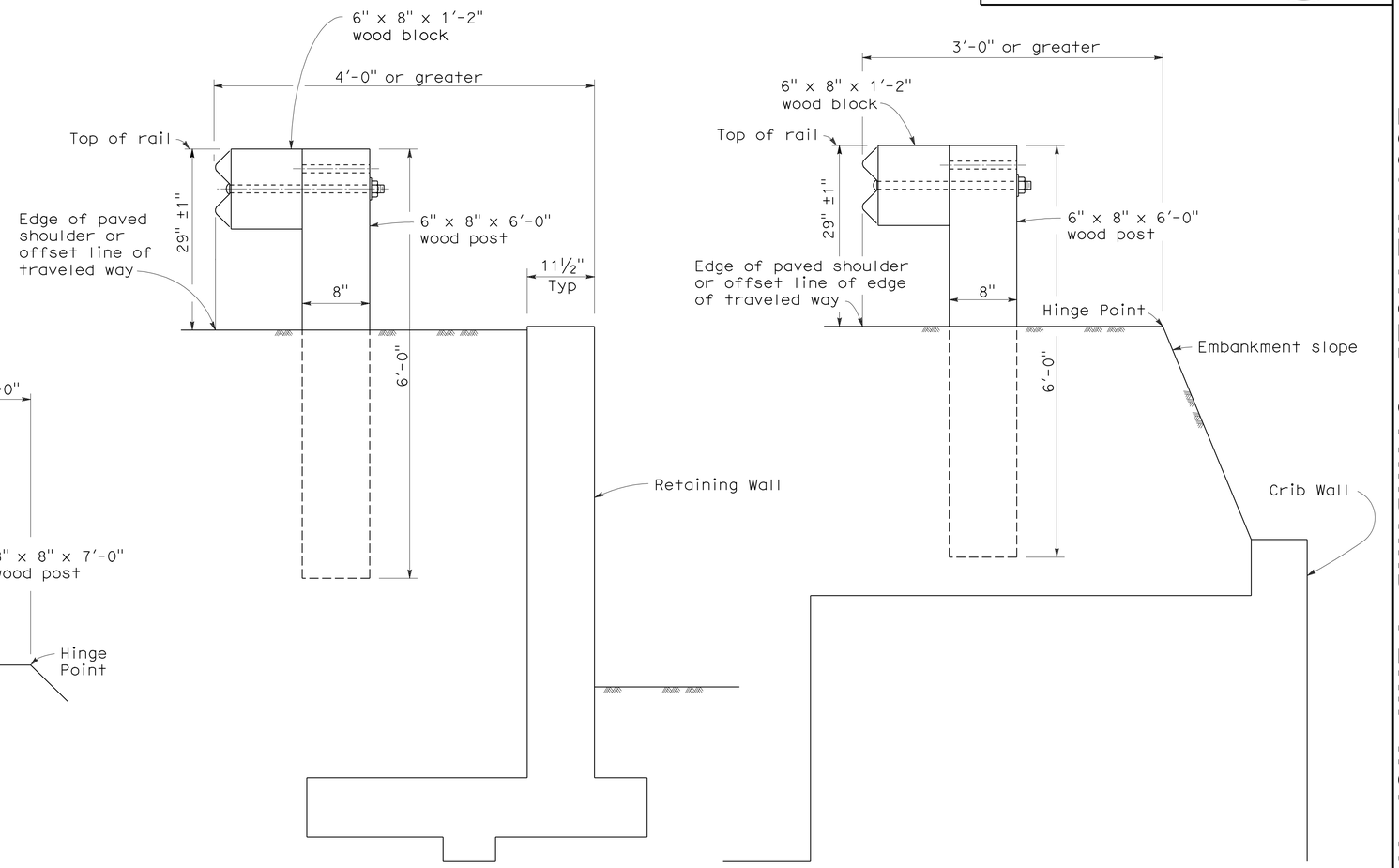

DETAIL C

DETAIL D

INSTALLATION AT EARTH RETAINING WALLS

NOTES:

1. These installation details also applicable to steel line post installations. For Detail A, C, and D, where steel line post installations are constructed, W6 x 9 steel post, 6'-0" in length, with 6" x 8" x 1'-2" notched wood blocks or notched recycled plastic blocks are to be used in place of the size of wood post and wood block shown. For Detail B, where steel line post installations are constructed, W6 x 9 steel post, 7'-0" in length, with 6" x 8" x 1'-2" notched wood blocks or notched recycled plastic blocks are to be used in place of the size of wood post and wood block shown. For additional installation details, see Standard Plans A77A1 and A77A2.

2. Where the distance between the face of the rail and the hinge point is less than 2'-0", see the Project Plans for special details.

3. For dike positioning with guard railing installations, see Standard Plan A77C4.

STATE OF CALIFORNIA
DEPARTMENT OF TRANSPORTATION

METAL BEAM GUARD RAILING TYPICAL LINE POST EMBEDMENT AND HINGE POINT OFFSET DETAILS

NO SCALE

RSP A77C3 DATED MAY 20, 2011 SUPERSEDES STANDARD PLAN A77C3
DATED MAY 1, 2006 - PAGE 46 OF THE STANDARD PLANS BOOK DATED MAY 2006.

REVISED STANDARD PLAN RSP A77C3

2006 REVISED STANDARD PLAN RSP A77C3

3-10-11

Dist	COUNTY	ROUTE	POST MILES TOTAL PROJECT	SHEET No.	TOTAL SHEETS
11	SD	54,805	1.8,5.5/9.4	474	635

Randell D. Hiatt
REGISTERED CIVIL ENGINEER

May 20, 2011
PLANS APPROVAL DATE

REGISTERED PROFESSIONAL ENGINEER
Randell D. Hiatt
No. C50200
Exp. 6-30-11
CIVIL
STATE OF CALIFORNIA

The State of California or its officers or agents shall not be responsible for the accuracy or completeness of electronic copies of this plan sheet.

To accompany plans dated 12-5-11

NOTES:

1. When necessary to place dike in front of face of guard railing, only Type C dike may be used. For dike details, see Standard Plan A87B.
2. For standard railing post embedment, see Standard Plans A77C3.
3. Guard railing delineation to be used where shown on the Project Plans.
4. When dike or curb is placed under guard railing, the maximum height of the dike or curb shall be 4". Mountable dike should not be used. For dike and curb details, see Standard Plans A87A and A87B.
5. For details of typical distance between the face of rail and hinge point, see Standard Plan A77C3.
6. For steel line posts, use 1/4 - 20 self-tapping screws in 0.22" diameter holes or 1/4" bolts in 9/32" diameter holes.

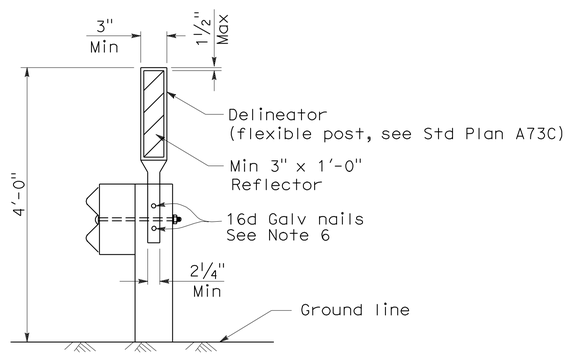

GUARD RAILING DELINEATION

See Note 3

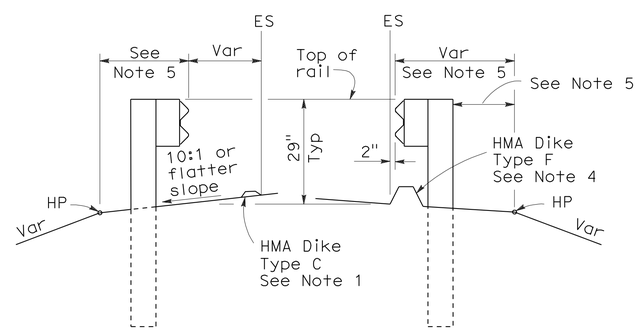

DIKE POSITIONING

See Note 1

STATE OF CALIFORNIA
DEPARTMENT OF TRANSPORTATION

METAL BEAM GUARD RAILING TYPICAL RAILING DELINEATION AND DIKE POSITIONING DETAILS

NO SCALE

RSP A77C4 DATED MAY 20, 2011 SUPERSEDES RSP A77C4 DATED JUNE 6, 2008 AND STANDARD PLAN A77C4 DATED MAY 1, 2006 - PAGE 47 OF THE STANDARD PLANS BOOK DATED MAY 2006.

REVISED STANDARD PLAN RSP A77C4

2006 REVISED STANDARD PLAN RSP A77C4

3-10-11

DIST	COUNTY	ROUTE	POST MILES TOTAL PROJECT	SHEET NO.	TOTAL SHEETS
11	SD	54,805	1.8,5.5/9.4	475	635

Randell D. Hiatt
REGISTERED CIVIL ENGINEER

October 20, 2006
PLANS APPROVAL DATE

REGISTERED PROFESSIONAL ENGINEER
Randell D. Hiatt
No. C50200
Exp. 6-30-07
CIVIL
STATE OF CALIFORNIA

The State of California or its officers or agents shall not be responsible for the accuracy or completeness of electronic copies of this plan sheet.

To accompany plans dated 12-5-11

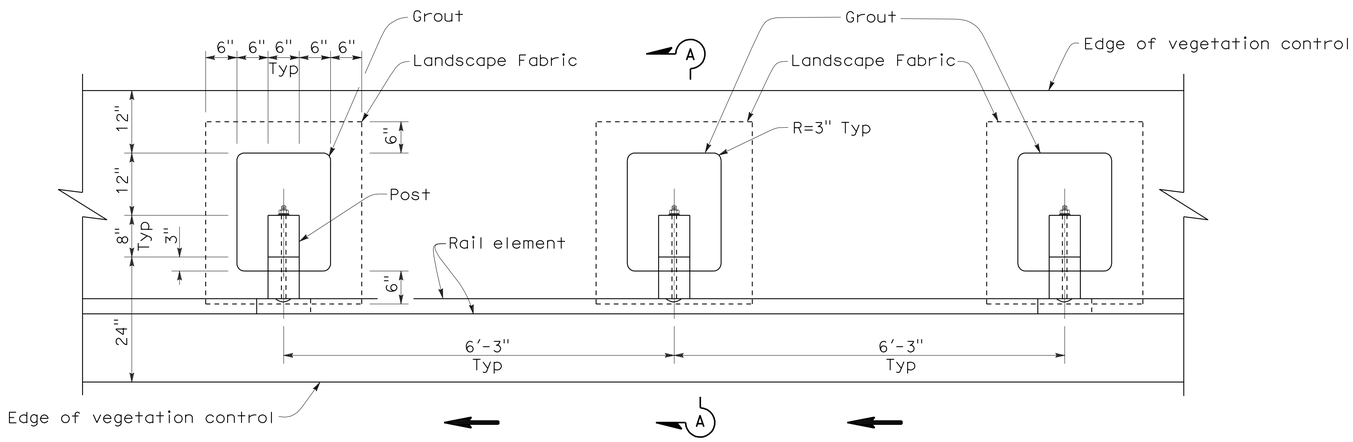

PLAN

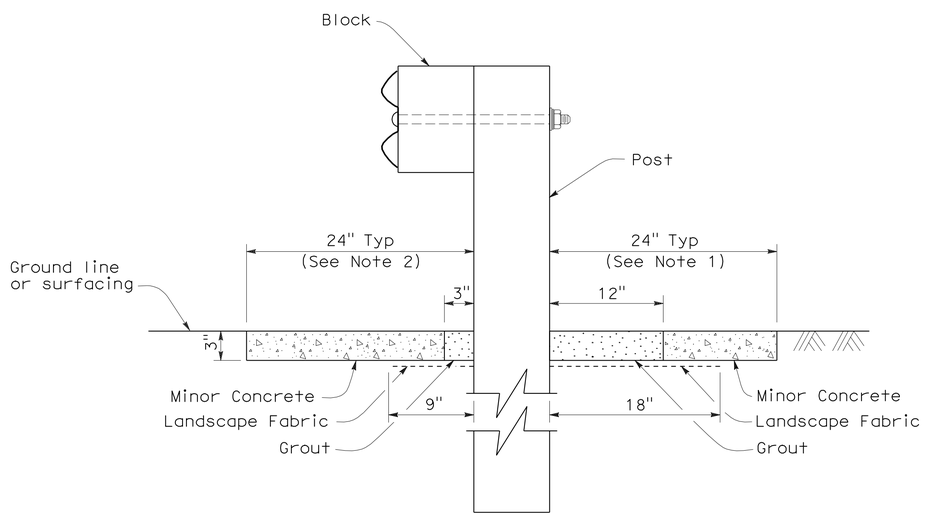

SECTION A-A

NOTES:

1. Where the distance between back of post and hinge point is less than 24", vegetation control to be constructed flush with the back edge of the post.
2. Where dike is constructed under railing, construct vegetation control to back edge of dike. Where paved shoulder is constructed within 24" in front of the post, construct vegetation control to the edge of paved shoulder.
3. Direction of adjacent traffic indicated by ← .

STATE OF CALIFORNIA
DEPARTMENT OF TRANSPORTATION

METAL BEAM GUARD RAILING TYPICAL VEGETATION CONTROL STANDARD RAILING SECTION

NO SCALE

NSP A77C5 DATED OCTOBER 20, 2006 SUPPLEMENTS THE STANDARD PLANS BOOK DATED MAY 2006.

NEW STANDARD PLAN NSP A77C5

2006 NEW STANDARD PLAN NSP A77C5

DIST	COUNTY	ROUTE	POST MILES TOTAL PROJECT	SHEET NO.	TOTAL SHEETS
11	SD	54,805	1.8,5.5/9.4	476	635

Randell D. Hiatt
REGISTERED CIVIL ENGINEER

October 20, 2006
PLANS APPROVAL DATE

REGISTERED PROFESSIONAL ENGINEER
Randell D. Hiatt
No. C50200
Exp. 6-30-07
CIVIL
STATE OF CALIFORNIA

The State of California or its officers or agents shall not be responsible for the accuracy or completeness of electronic copies of this plan sheet.

To accompany plans dated 12-5-11

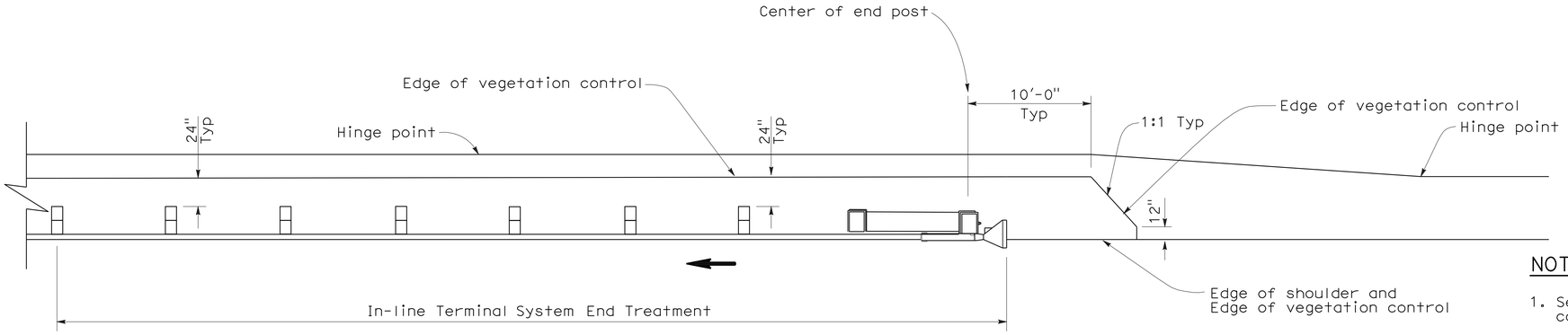

PLAN

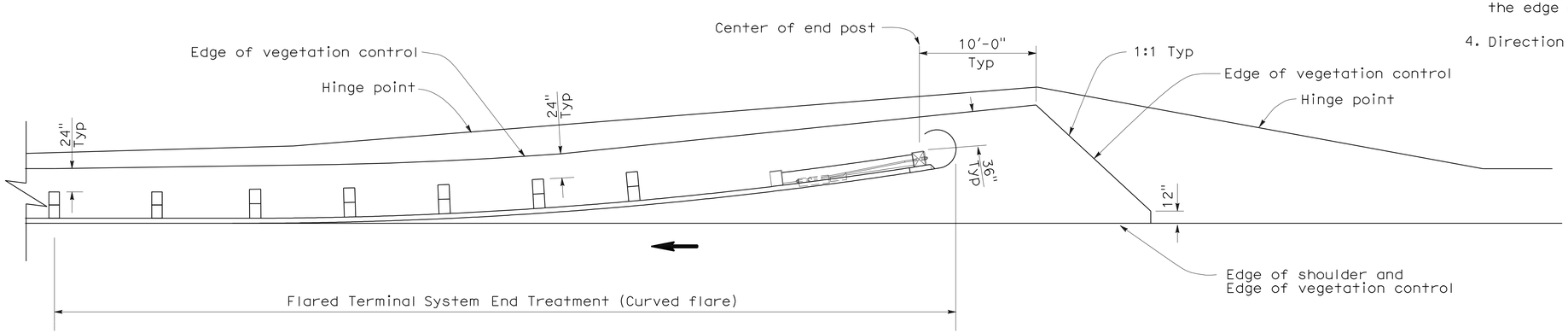

PLAN

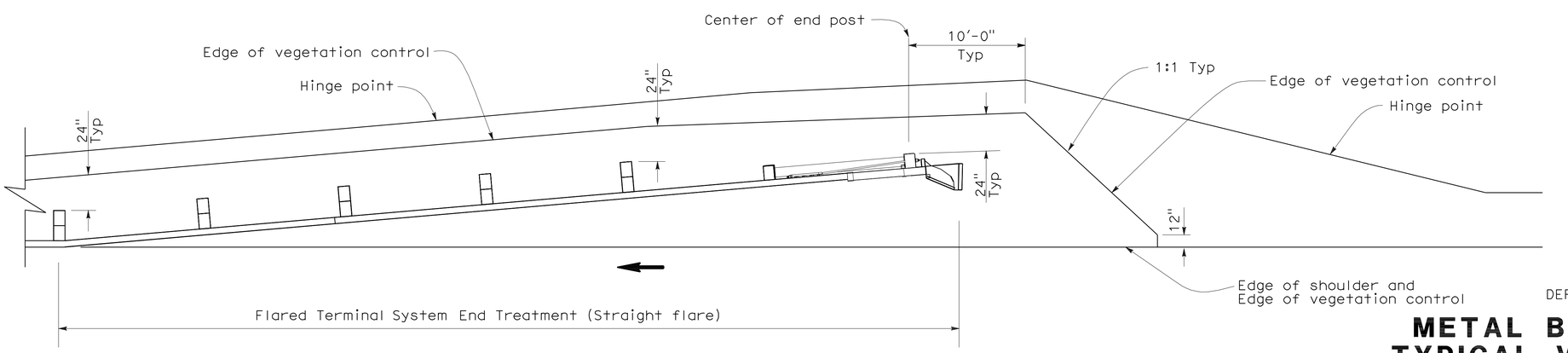

PLAN

NOTES:

1. See New Standard Plan NSP A77C5 for additional vegetation control details.
2. Where the distance between back of post and hinge point is less than 24", vegetation control to be constructed flush with the back edge of the post.
3. Where dike is constructed under railing, construct vegetation control to back edge of dike. Where paved shoulder is constructed within 24" in front of the post, construct vegetation control to the edge of paved shoulder.
4. Direction of adjacent traffic indicated by ←.

STATE OF CALIFORNIA
DEPARTMENT OF TRANSPORTATION

METAL BEAM GUARD RAILING TYPICAL VEGETATION CONTROL FOR TERMINAL SYSTEM END TREATMENTS

NO SCALE

NSP A77C6 DATED OCTOBER 20, 2006 SUPPLEMENTS THE STANDARD PLANS BOOK DATED MAY 2006.

NEW STANDARD PLAN NSP A77C6

2006 NEW STANDARD PLAN NSP A77C6

7-17-06

DIST	COUNTY	ROUTE	POST MILES TOTAL PROJECT	SHEET NO.	TOTAL SHEETS
11	SD	54,805	1.8,5.5/9.4	477	635

Randell D. Hiatt
REGISTERED CIVIL ENGINEER

October 20, 2006
PLANS APPROVAL DATE

REGISTERED PROFESSIONAL ENGINEER
Randell D. Hiatt
No. C50200
Exp. 6-30-07
CIVIL
STATE OF CALIFORNIA

The State of California or its officers or agents shall not be responsible for the accuracy or completeness of electronic copies of this plan sheet.

To accompany plans dated 12-5-11

NOTES:

1. See New Standard Plan NSP A77C5 for additional vegetation control details.
2. Where the distance between back of post and hinge point is less than 24", vegetation control to be constructed flush with the back edge of the post.
3. Where dike is constructed under railing, construct vegetation control to back edge of dike. Where paved shoulder is constructed within 24" in front of the post, construct vegetation control to the edge of paved shoulder.
4. Direction of adjacent traffic indicated by ←.

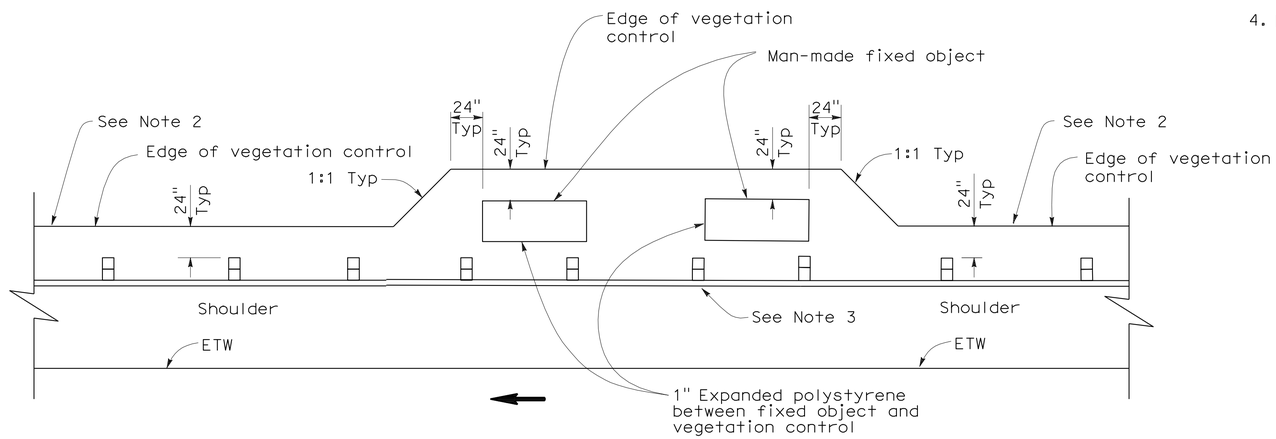

PLAN

FIXED OBJECT(S) ON SHOULDER

STATE OF CALIFORNIA
DEPARTMENT OF TRANSPORTATION

METAL BEAM GUARD RAILING TYPICAL VEGETATION CONTROL AT FIXED OBJECT

NO SCALE

NSP A77C8 DATED OCTOBER 20, 2006 SUPPLEMENTS THE STANDARD PLANS BOOK DATED MAY 2006.

NEW STANDARD PLAN NSP A77C8

2006 NEW STANDARD PLAN NSP A77C8

7-17-06

DIST	COUNTY	ROUTE	POST MILES TOTAL PROJECT	SHEET NO.	TOTAL SHEETS
11	SD	54,805	1.8,5.5/9.4	478	635

William K. Farnbach
REGISTERED CIVIL ENGINEER

May 15, 2009
PLANS APPROVAL DATE

REGISTERED PROFESSIONAL ENGINEER
William K. Farnbach
No. C49042
Exp. 9-30-10
CIVIL
STATE OF CALIFORNIA

The State of California or its officers or agents shall not be responsible for the accuracy or completeness of electronic copies of this plan sheet.

To accompany plans dated 12-5-11

2006 REVISED STANDARD PLAN RSP P1

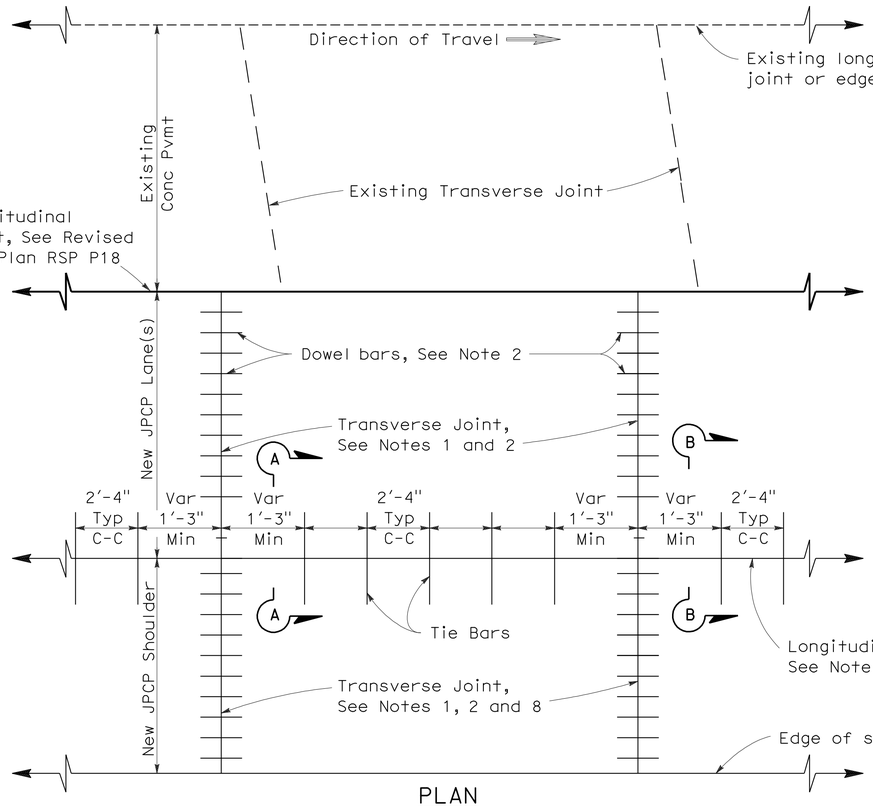

PLAN

LANE/SHOULDER ADDITION OR RECONSTRUCTION

See Notes 6 and 7

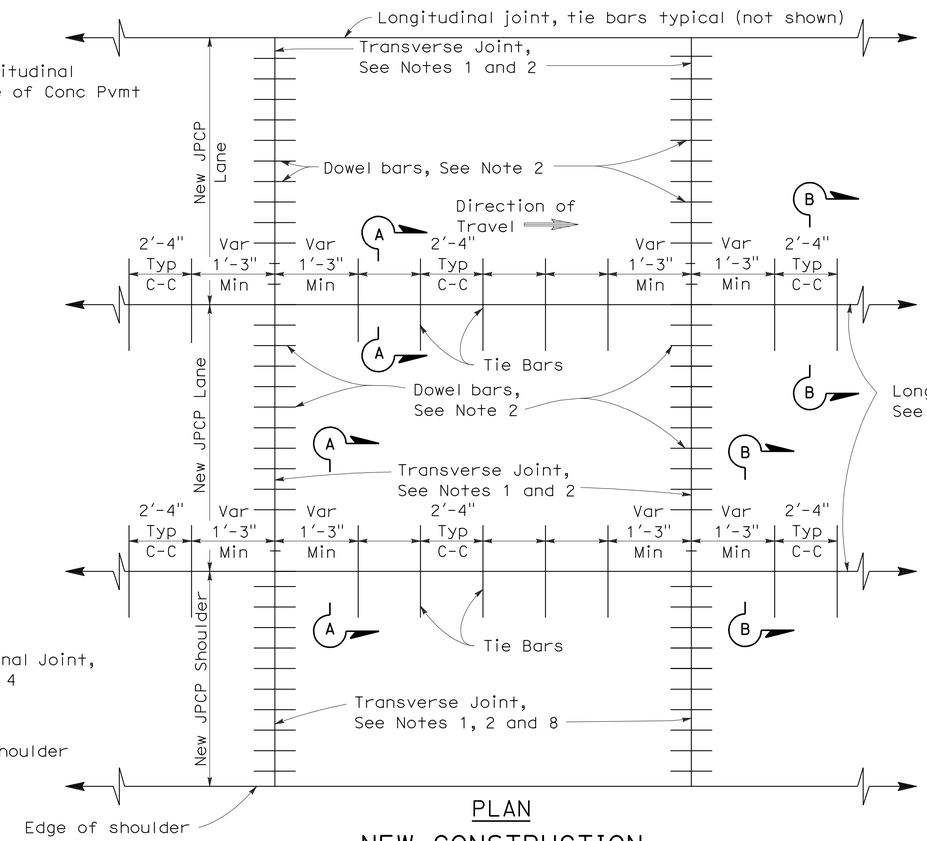

PLAN

NEW CONSTRUCTION

See Notes 6 and 7

NOTES:

1. Transverse joints shall be constructed at right angles to the longitudinal pavement joints in new jointed plain concrete pavement and spaced at successive repeated intervals of 12', 15', 13' and 14'.
2. For transverse joint and dowel bar details not shown, See Revised Standard Plan RSP P10.
3. Construct longitudinal contraction joints as shown in Section A-A when more than one lane or shoulder widths are placed at one time. If constructing one lane at a time, use longitudinal construction joint, as shown in Section B-B.
4. For additional longitudinal joint details, see Revised Standard Plan RSP P18.
5. If fresh concrete is placed adjacent to existing concrete, the top corner of the new hardened concrete does not need to be rounded to the 1/4" radius as shown.
6. Joint spacing patterns do not apply to intersections.
7. Details can also apply to inside widening.
8. Dowel bars may be omitted from shoulders when the shoulder cross slope is not the same as the adjacent traffic lane.

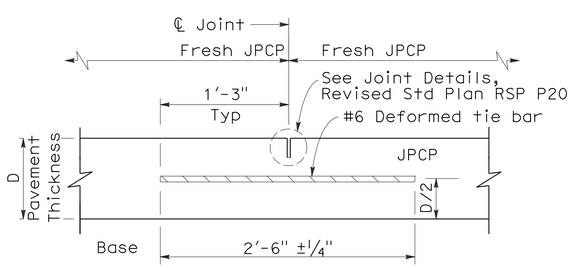

SECTION A-A

LONGITUDINAL CONTRACTION JOINT

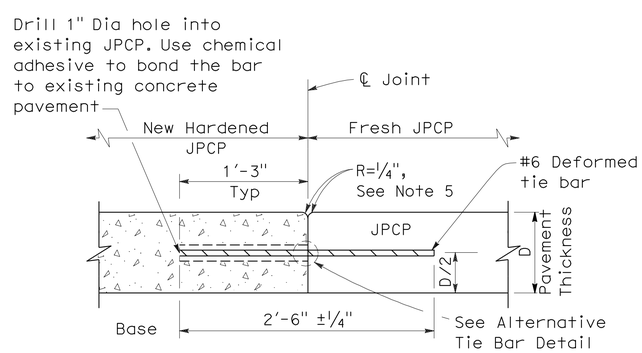

SECTION B-B

LONGITUDINAL CONSTRUCTION JOINT

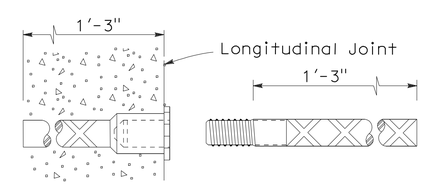

ALTERNATIVE TIE BAR SPLICE DETAIL

(Splice Coupler)

TIE BAR DETAILS

STATE OF CALIFORNIA
DEPARTMENT OF TRANSPORTATION

JOINTED PLAIN CONCRETE PAVEMENT

NO SCALE

RSP P1 DATED MAY 15, 2009 SUPERSEDES STANDARD PLAN P1
DATED MAY 1, 2006 - PAGE 119 OF THE STANDARD PLANS BOOK DATED MAY 2006.

REVISED STANDARD PLAN RSP P1

5-8-09

DIST	COUNTY	ROUTE	POST MILES TOTAL PROJECT	SHEET NO.	TOTAL SHEETS
11	SD	54,805	1.8,5.5/9.4	479	635

William K. Farnbach
REGISTERED CIVIL ENGINEER

June 5, 2009
PLANS APPROVAL DATE

REGISTERED PROFESSIONAL ENGINEER
William K. Farnbach
No. C49042
Exp. 9-30-10
CIVIL
STATE OF CALIFORNIA

The State of California or its officers or agents shall not be responsible for the accuracy or completeness of electronic copies of this plan sheet.

To accompany plans dated 12-5-11

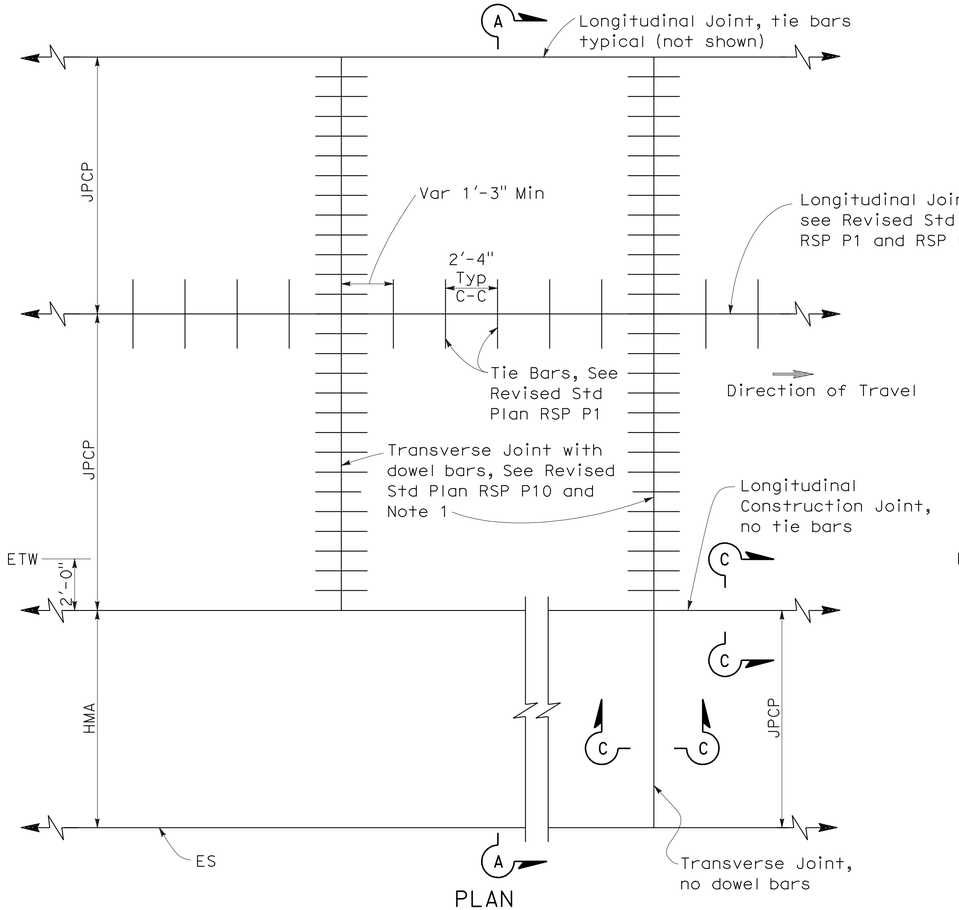

PLAN

NEW CONSTRUCTION

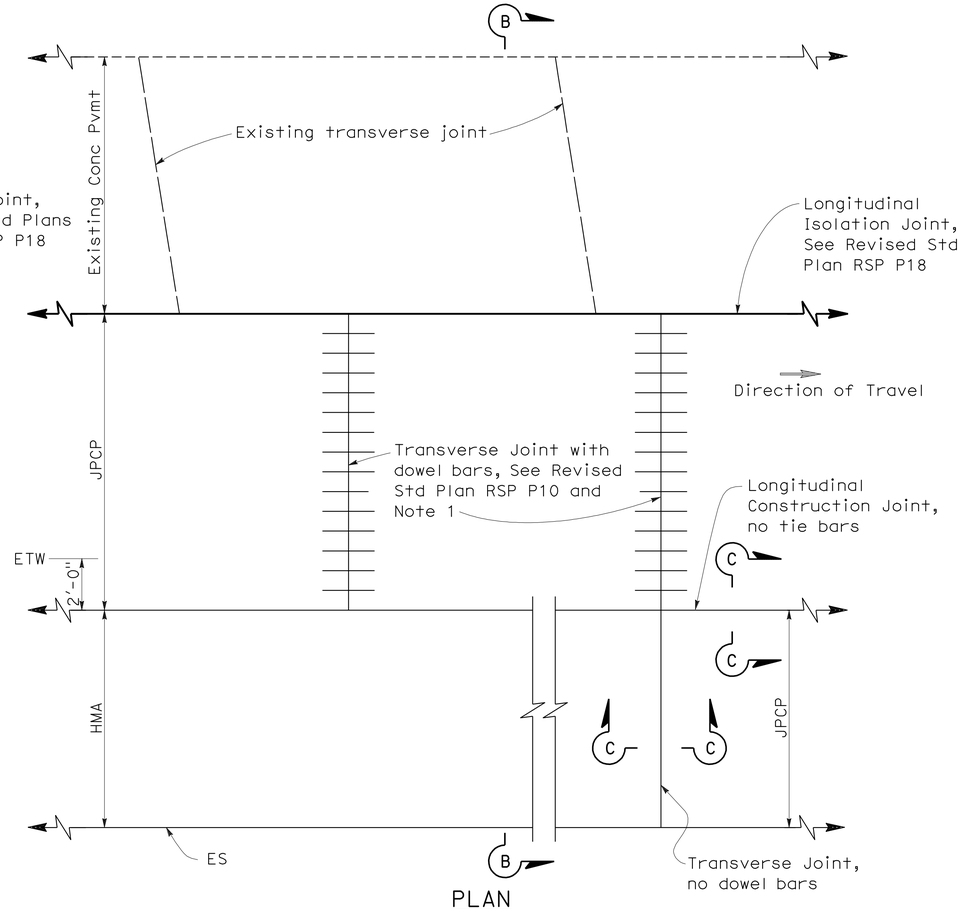

PLAN

LANE/SHOULDER ADDITION OR RECONSTRUCTION

NOTES:

1. Transverse joints shall be constructed at right angles to the longitudinal pavement joints in new Jointed Plain Concrete Pavement and spaced at successive repeated intervals of 12', 15', 13' and 14'.
2. For locations of rumble strips, see project plans. For rumble strip details not shown, see Standard Plans A40A and A40B.
3. Joint spacing patterns do not apply to intersections.

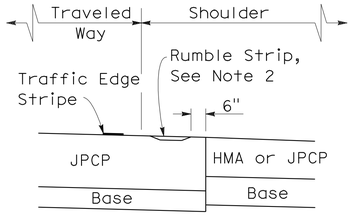

DETAIL "A"

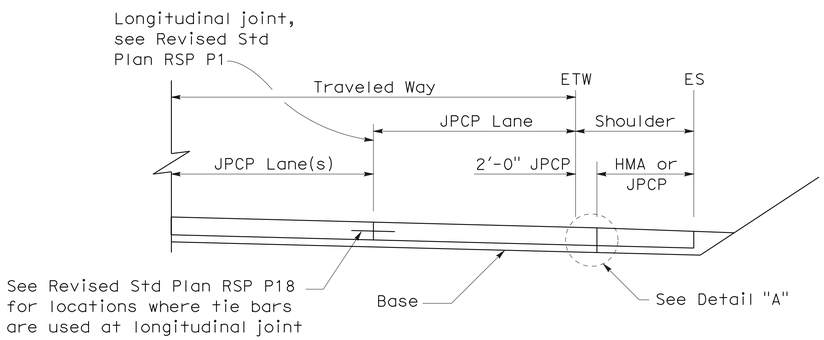

SECTION A-A

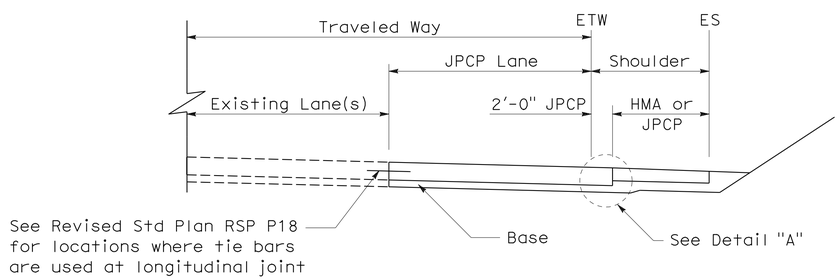

SECTION B-B

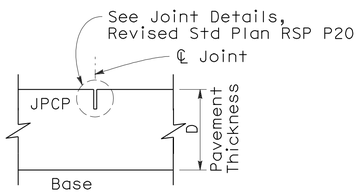

SECTION C-C

TRANSVERSE/LONGITUDINAL JOINT

(no dowel bars/tie bars)

STATE OF CALIFORNIA
DEPARTMENT OF TRANSPORTATION

JOINTED PLAIN CONCRETE PAVEMENT-WIDENED SLAB DETAILS

NO SCALE

RSP P2 DATED JUNE 5, 2009 SUPERCEDES STANDARD PLAN P2
DATED MAY 1, 2006 - PAGE 120 OF THE STANDARD PLANS BOOK DATED MAY 2006.

REVISED STANDARD PLAN RSP P2

2006 REVISED STANDARD PLAN RSP P2

5-19-09

DIST	COUNTY	ROUTE	POST MILES TOTAL PROJECT	SHEET NO.	TOTAL SHEETS
11	SD	54,805	1.8,5.5/9.4	480	635

William K. Farnbach
REGISTERED CIVIL ENGINEER

May 15, 2009
PLANS APPROVAL DATE

REGISTERED PROFESSIONAL ENGINEER William K. Farnbach No. C49042 Exp. 9-30-10 CIVIL STATE OF CALIFORNIA

The State of California or its officers or agents shall not be responsible for the accuracy or completeness of electronic copies of this plan sheet.

To accompany plans dated 12-5-11

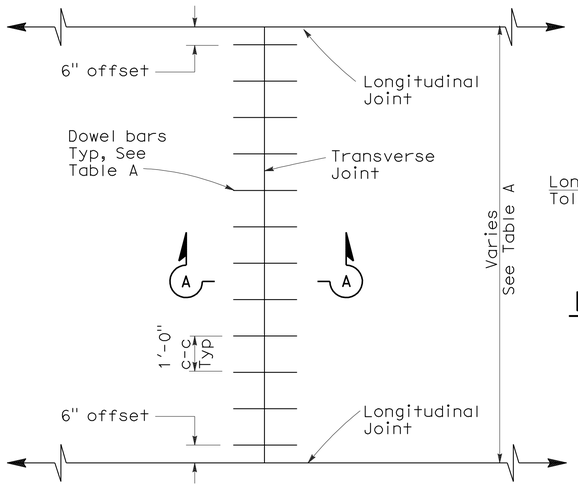

TRANSVERSE JOINT DOWEL BAR LAYOUT

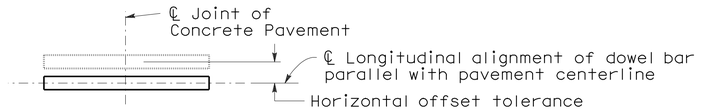

PLAN

HORIZONTAL OFFSET TOLERANCE

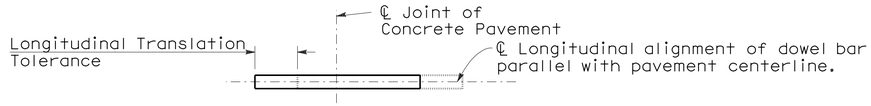

PLAN

LONGITUDINAL TRANSLATION TOLERANCE

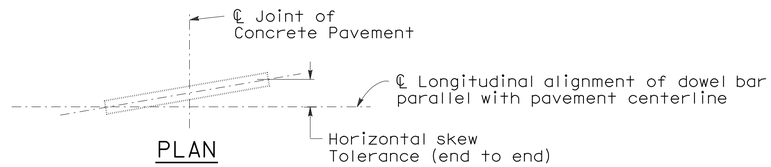

PLAN

HORIZONTAL SKEW TOLERANCE

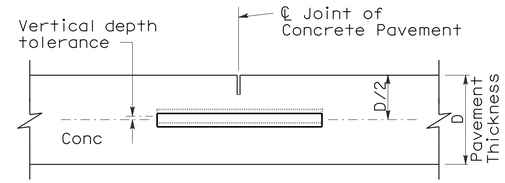

ELEVATION

VERTICAL DEPTH TOLERANCE

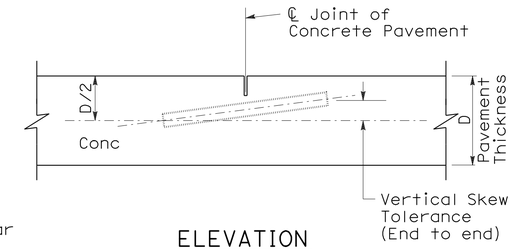

ELEVATION

VERTICAL SKEW TOLERANCE

NOTES:

1. See Revised Standard Plan RSP P1 for typical dowel bar placement and locations.
2. 1½" Dia smooth dowel bars are to be used with a pavement thickness, D, equal to or greater than 0.70 feet. For pavement thickness, D, less than 0.70 feet, use 1¼" Dia smooth dowel bars.
3. For widths not shown, see Project Plans.
4. If fresh concrete pavement is placed adjacent to existing concrete pavement, the top corner of the existing concrete pavement does not need to be rounded to the ¼" radius, as shown.

TABLE A (See Note 3)

Dowel Bar Transverse Spacing Table	
Width between Longitudinal Joints	Number of Dowels between Longitudinal Joints
14'-0"	14
13'-0"	13
12'-0"	12
11'-0"	11
10'-0"	10
8'-0"	8
5'-0"	5
4'-0"	4

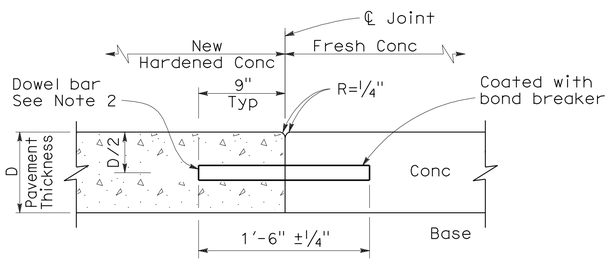

SECTION A-A

TRANSVERSE CONSTRUCTION JOINT DETAIL

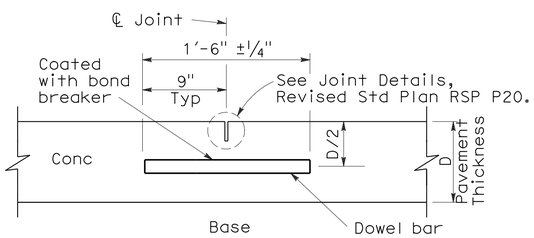

TRANSVERSE CONTRACTION JOINT

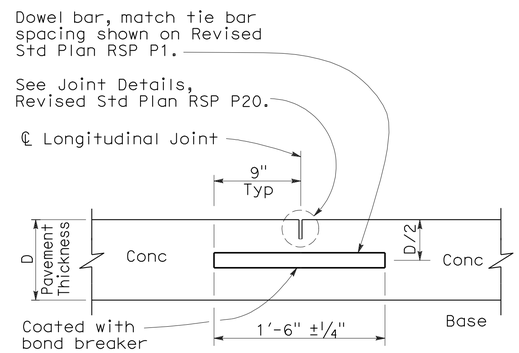

LONGITUDINAL CONTRACTION JOINT WITH DOWEL BARS

(See Revised Std Plan RSP P18)

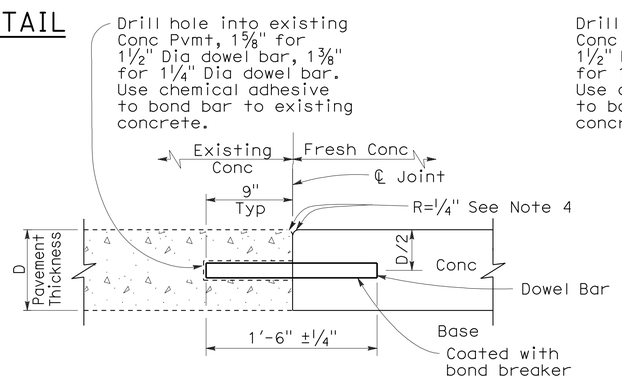

TRANSVERSE CONSTRUCTION JOINT FOR EXISTING CONCRETE PAVEMENT

(Drill and bond locations)

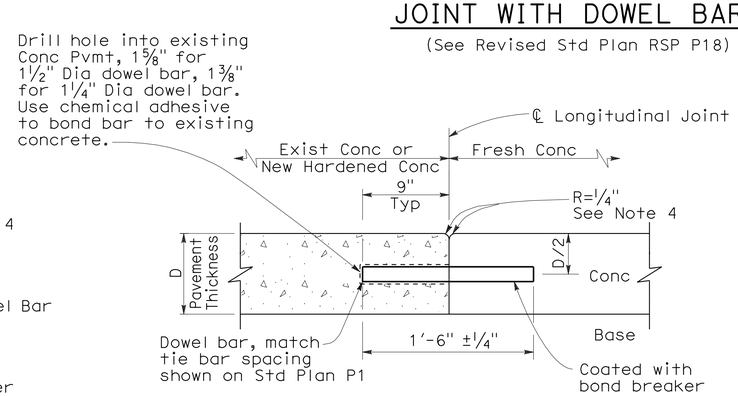

LONGITUDINAL CONSTRUCTION JOINT WITH DOWEL BARS

(See Revised Std Plan RSP P18)

STATE OF CALIFORNIA
DEPARTMENT OF TRANSPORTATION

CONCRETE PAVEMENT-DOWEL BAR DETAILS

NO SCALE

RSP P10 DATED MAY 15, 2009 SUPERSEDES STANDARD PLAN P10 DATED MAY 1, 2006 - PAGE 124 OF THE STANDARD PLANS BOOK DATED MAY 2006.

REVISED STANDARD PLAN RSP P10

2006 REVISED STANDARD PLAN RSP P10

5-8-09

DIST	COUNTY	ROUTE	POST MILES TOTAL PROJECT	SHEET NO.	TOTAL SHEETS
11	SD	54,805	1.8,5.5/9.4	481	635

William K. Farnbach
REGISTERED CIVIL ENGINEER

May 15, 2009
PLANS APPROVAL DATE

REGISTERED PROFESSIONAL ENGINEER
William K. Farnbach
No. C49042
Exp. 9-30-10
CIVIL
STATE OF CALIFORNIA

The State of California or its officers or agents shall not be responsible for the accuracy or completeness of electronic copies of this plan sheet.

To accompany plans dated 12-5-11

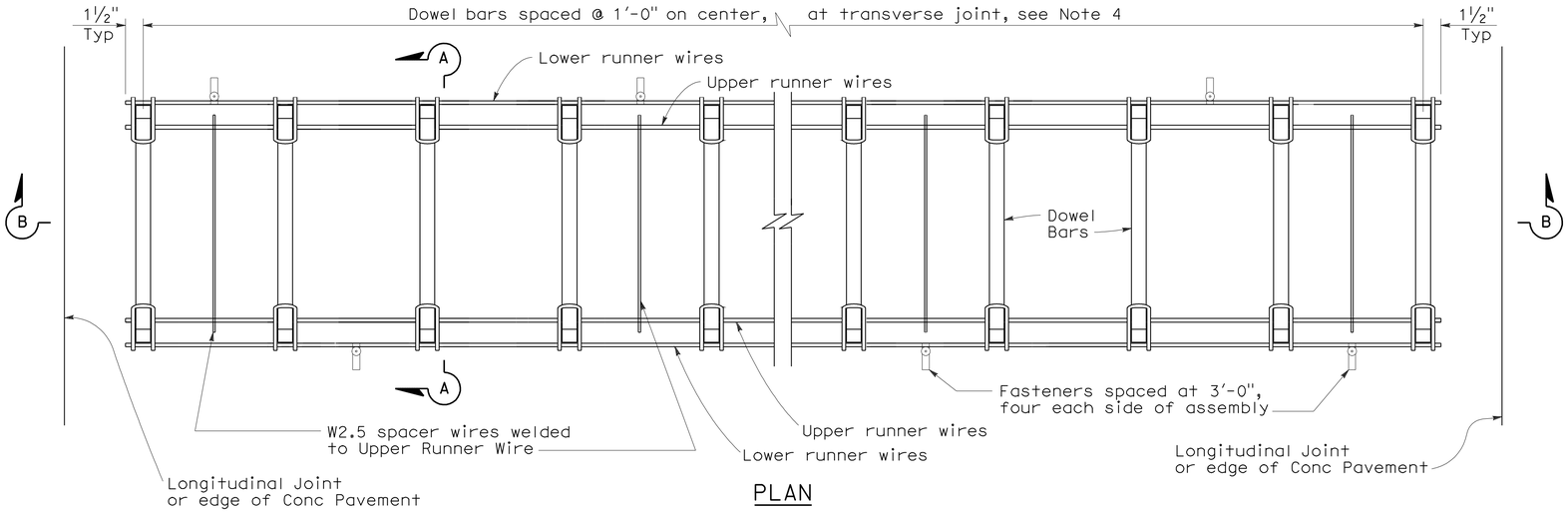

PLAN

DOWEL BAR BASKET (TRANSVERSE JOINT)

See Note 1

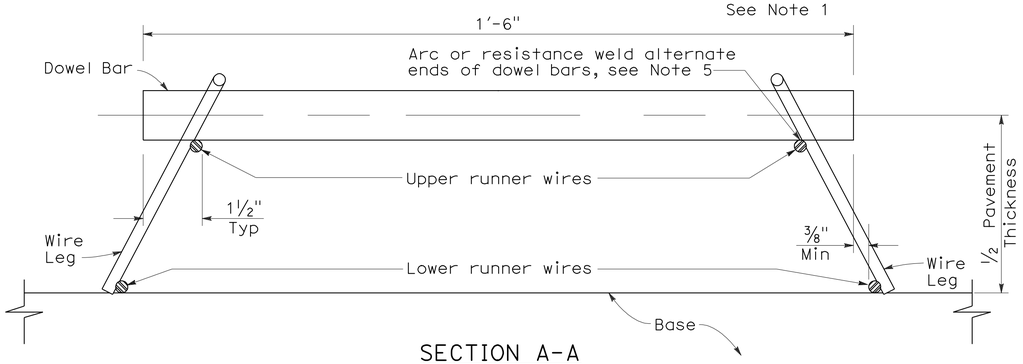

SECTION A-A

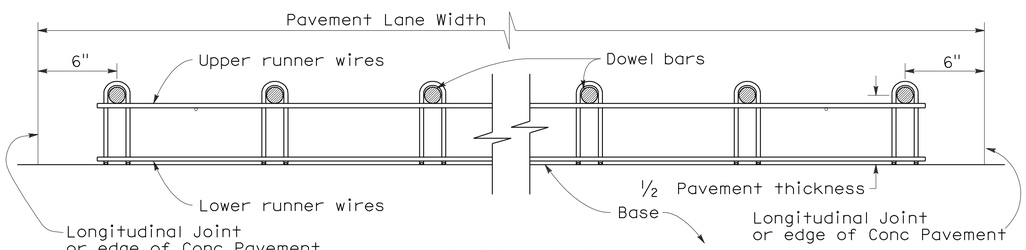

SECTION B-B

See Note 1

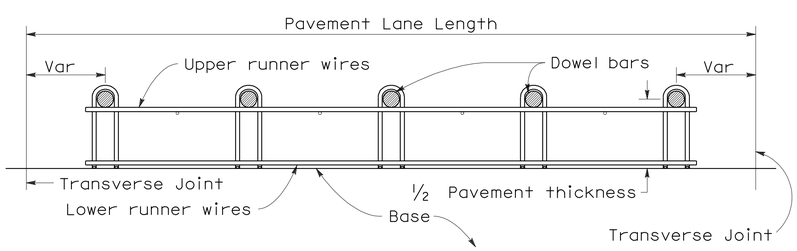

SECTION C-C

See Notes 1 and 4

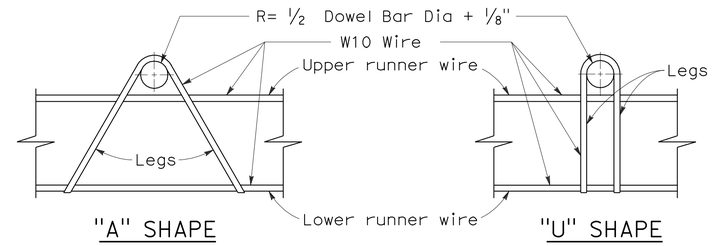

"A" SHAPE "U" SHAPE

ASSEMBLY FRAME DETAILS

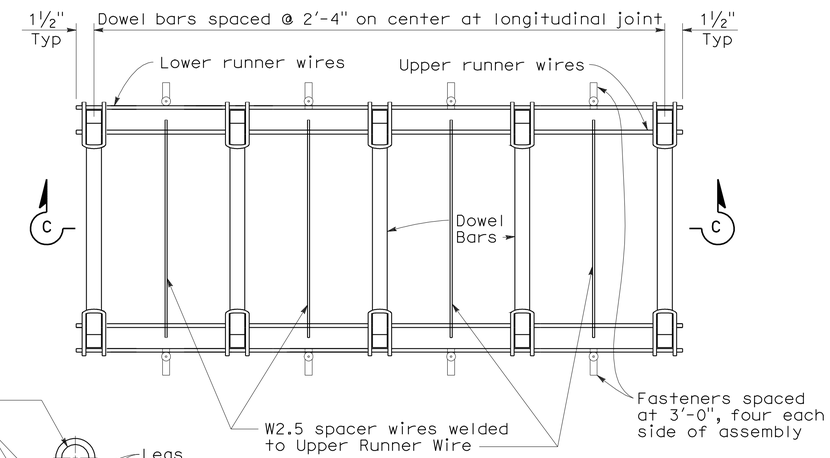

PLAN

DOWEL BAR BASKET (LONGITUDINAL JOINT)

See Note 1

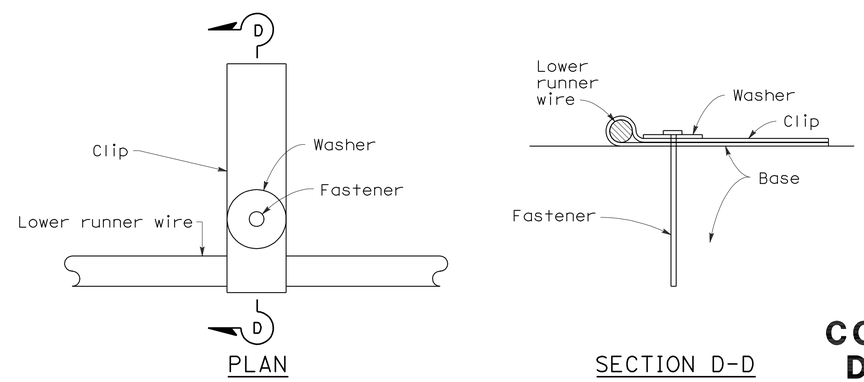

PLAN SECTION D-D

FASTENER DETAIL

NOTES:

1. "U" frame shape assembly shown. "U" frame shape or "A" frame shape are acceptable.
2. Wire sizes shown are minimum required.
3. All wire intersections are to be resistance welded.
4. Use tie bar spacing for longitudinal dowel bar locations. See Revised Std Plans RSPs P1, P2, and P3 for tie bar requirements.
5. Weld may be at top or bottom of dowel bar.

STATE OF CALIFORNIA
DEPARTMENT OF TRANSPORTATION

CONCRETE PAVEMENT-DOWEL BAR BASKET DETAILS

NO SCALE

RSP P12 DATED MAY 15, 2009 SUPERSEDES RSP P12 DATED NOVEMBER 17, 2006 AND STANDARD PLAN P12 DATED MAY 1, 2006 - PAGE 125 OF THE STANDARD PLANS BOOK DATED MAY 2006.

REVISED STANDARD PLAN RSP P12

2006 REVISED STANDARD PLAN RSP P12

5-8-09

DIST	COUNTY	ROUTE	POST MILES TOTAL PROJECT	SHEET NO.	TOTAL SHEETS
11	SD	54,805	1.8,5.5/9.4	482	635

William K. Farnbach
REGISTERED CIVIL ENGINEER

May 15, 2009
PLANS APPROVAL DATE

REGISTERED PROFESSIONAL ENGINEER
William K. Farnbach
No. C49042
Exp. 9-30-10
CIVIL
STATE OF CALIFORNIA

The State of California or its officers or agents shall not be responsible for the accuracy or completeness of electronic copies of this plan sheet.

To accompany plans dated 12-5-11

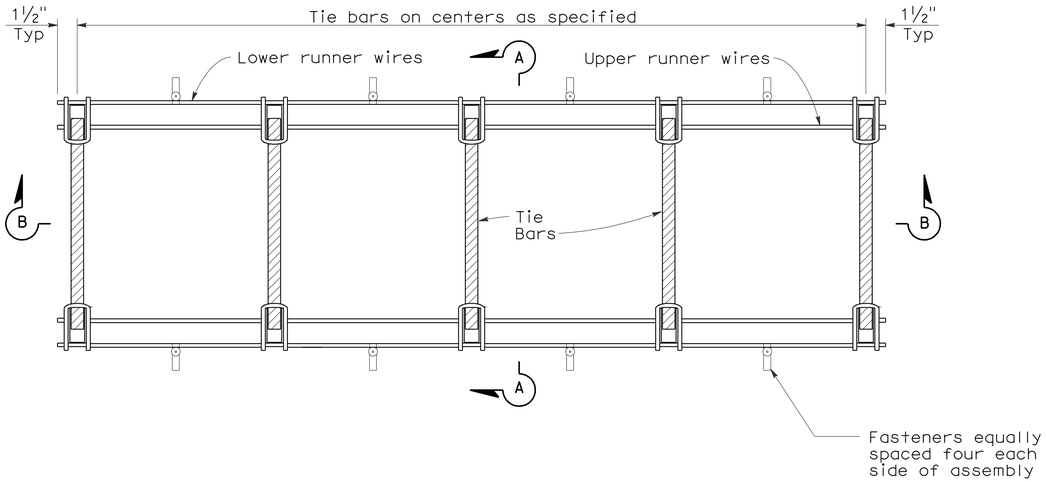

PLAN

TIE BAR BASKET

(TIE BARS AT LONGITUDINAL JOINT)
See Note 1

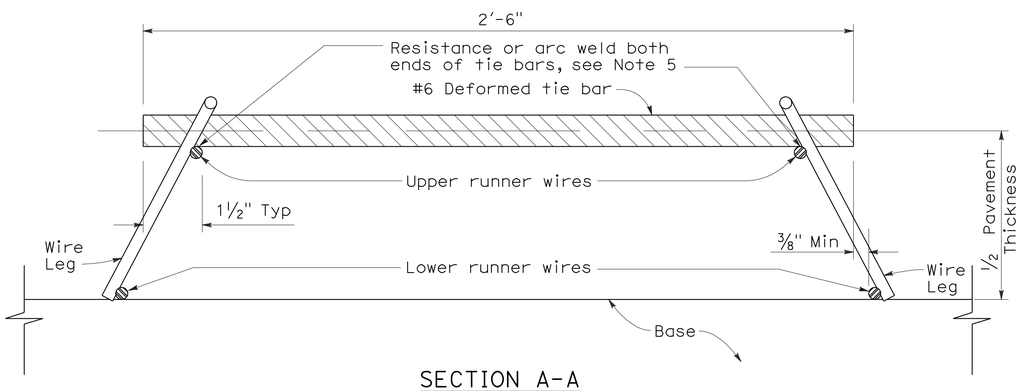

SECTION A-A

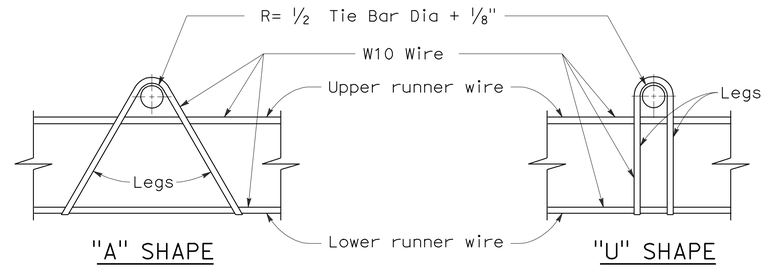

ASSEMBLY FRAME DETAILS

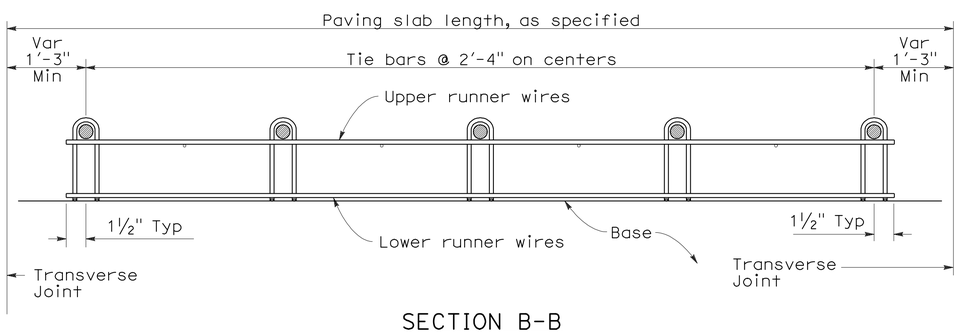

SECTION B-B
See Note 1

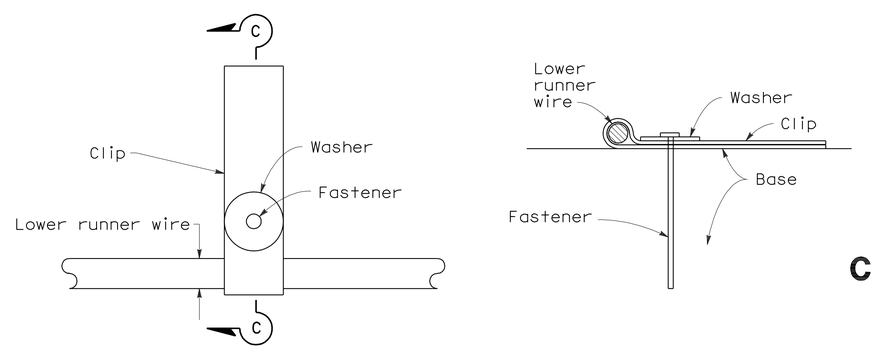

PLAN

SECTION C-C

FASTENER DETAIL

NOTES:

1. "U" frame shape assembly shown. "U" frame shape or "A" frame shape are acceptable.
2. Wire sizes shown are minimum required.
3. All wire intersections are to be resistance welded.
4. Not for use on nondoweled skewed jointed plain concrete pavement.
5. Weld may be at top or bottom of tie bar.

STATE OF CALIFORNIA
DEPARTMENT OF TRANSPORTATION

CONCRETE PAVEMENT-TIE BAR BASKET DETAILS

NO SCALE

RSP P17 DATED MAY 15, 2009 SUPERSEDES RSP P17 DATED NOVEMBER 17, 2006 AND STANDARD PLAN P17 DATED MAY 1, 2006 - PAGE 126 OF THE STANDARD PLANS BOOK DATED MAY 2006.

REVISED STANDARD PLAN RSP P17

2006 REVISED STANDARD PLAN RSP P17

5-8-09

DIST	COUNTY	ROUTE	POST MILES TOTAL PROJECT	SHEET NO.	TOTAL SHEETS
11	SD	54,805	1.8,5.5/9.4	483	635

REGISTERED CIVIL ENGINEER

June 5, 2009
PLANS APPROVAL DATE

REGISTERED PROFESSIONAL ENGINEER — William K. Farnbach — No. C49042 — Exp. 9-30-10 — CIVIL — STATE OF CALIFORNIA

The State of California or its officers or agents shall not be responsible for the accuracy or completeness of electronic copies of this plan sheet.

To accompany plans dated 12-5-11

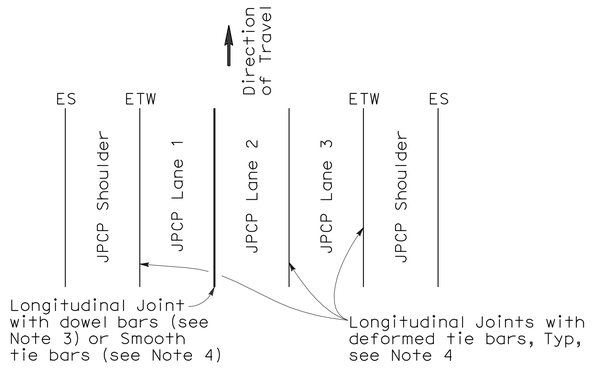

3 LANES WITH TIED CONCRETE SHOULDERS
PLAN

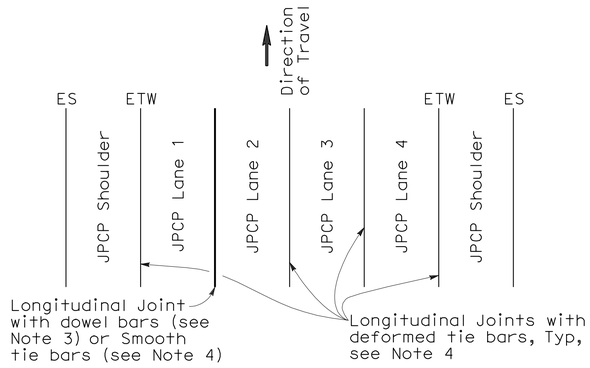

4 LANES WITH TIED CONCRETE SHOULDERS
PLAN

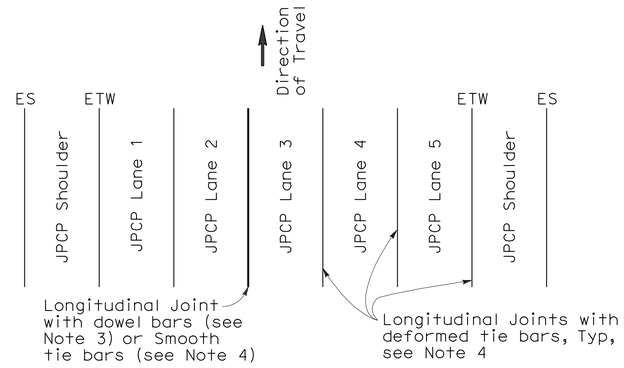

5 LANES WITH TIED CONCRETE SHOULDERS
PLAN

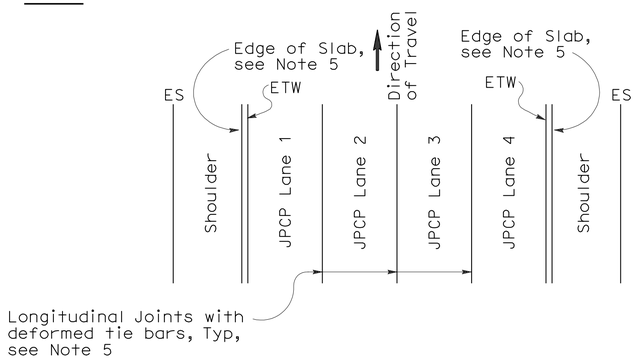

4 LANES OR LESS WITH WIDENED SLAB
PLAN

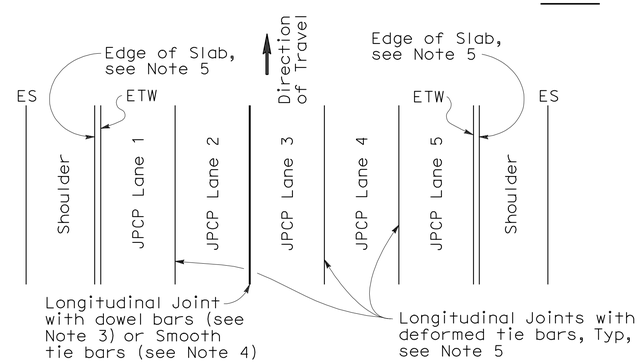

5 LANES WITH WIDENED SLAB
PLAN

NEW CONSTRUCTION

Location of Longitudinal Joints
(For JPCP)

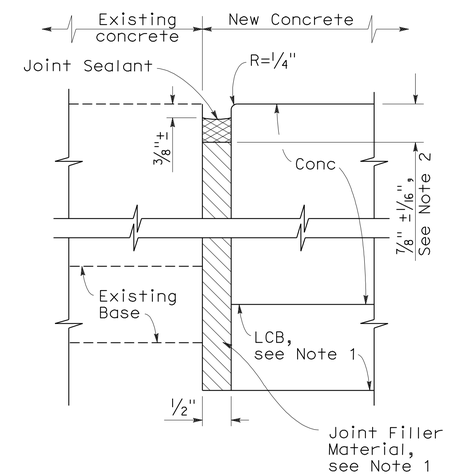

DETAIL A

ISOLATION JOINT

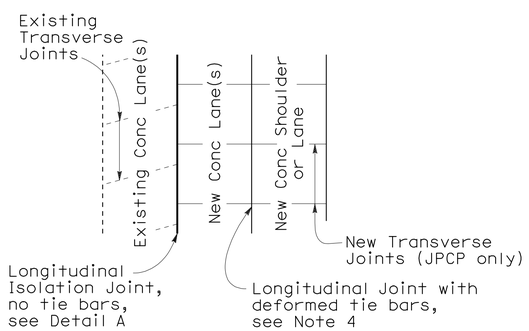

CASE 1
PLAN

Transverse Joints do not align between new and existing

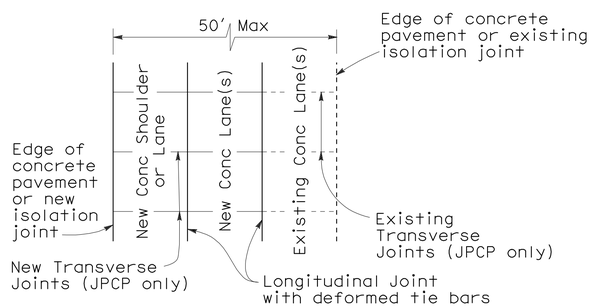

CASE 2
PLAN

Transverse Joints align between new and existing

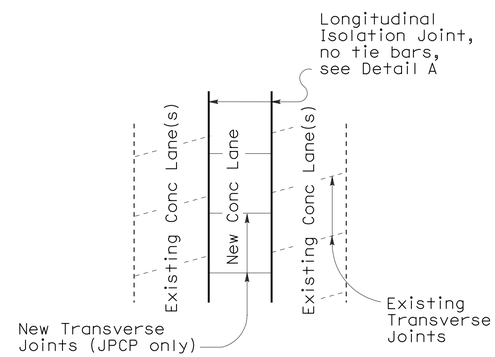

CASE 3 (INTERIOR LANE REPLACEMENT)
PLAN

Transverse Joints do not align between new and existing

LANE/SHOULDER ADDITION OR RECONSTRUCTION

(For JPCP and CRCP)

NOTES:

1. Where Lean Concrete Base is not used as base material, the joint filler material used for the longitudinal isolation joint shall only extend to the bottom of the new concrete slab. See Detail A.
2. Use 5/8" ±1/16" dimension for silicone sealant.
3. See Revised Standard Plan RSP P10 for longitudinal joint with dowel bars.
4. See Revised Standard Plan RSP P1.
5. See Revised Standard Plan RSP P2.

STATE OF CALIFORNIA
DEPARTMENT OF TRANSPORTATION

CONCRETE PAVEMENT-LANE SCHEMATICS AND ISOLATION JOINT DETAIL

NO SCALE

RSP P18 DATED JUNE 5, 2009 SUPERSEDES RSP P18 DATED MAY 15, 2009, RSP P18 DATED NOVEMBER 17, 2006 AND STANDARD PLAN P18 DATED MAY 1, 2006 - PAGE 127 OF THE STANDARD PLANS BOOK DATED MAY 2006.

REVISED STANDARD PLAN RSP P18

2006 REVISED STANDARD PLAN RSP P18

5-14-09

NOTE:

1. Tie bars, dowel bars, and reinforcement are not shown in joint seal details, see Revised Standard Plans RSP P1, RSP P3, RSP P10, RSP P35, RSP P45, or RSP P46 as applicable.

DIST	COUNTY	ROUTE	POST MILES TOTAL PROJECT	SHEET NO.	TOTAL SHEETS
11	SD	54,805	1.8,5.5/9.4	484	635

William K. Farnbach
REGISTERED CIVIL ENGINEER

May 15, 2009
PLANS APPROVAL DATE

REGISTERED PROFESSIONAL ENGINEER
William K. Farnbach
No. C49042
Exp. 9-30-10
CIVIL
STATE OF CALIFORNIA

The State of California or its officers or agents shall not be responsible for the accuracy or completeness of electronic copies of this plan sheet.

To accompany plans dated 12-5-11

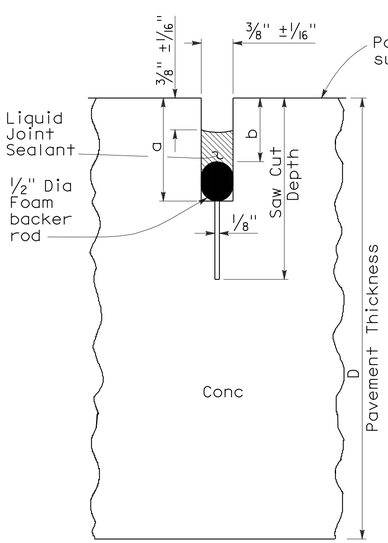

LIQUID SEALANT

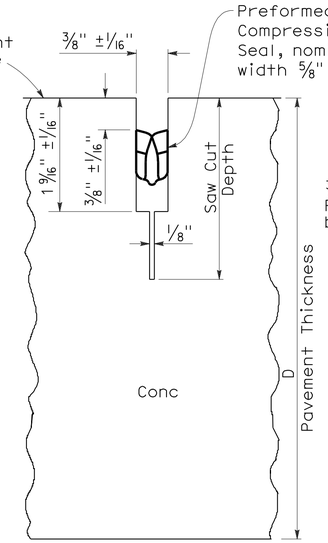

COMPRESSION SEAL

TYPE A1

Transverse Contraction Joints

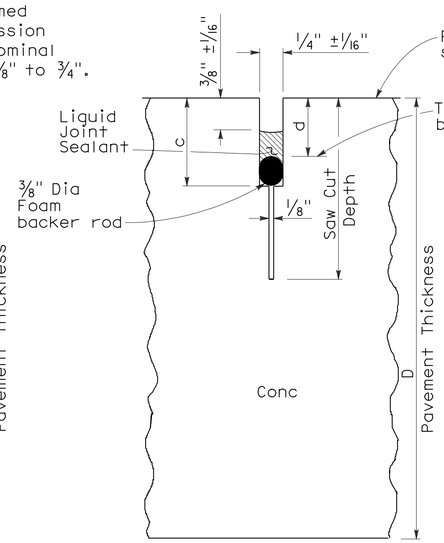

LIQUID SEALANT

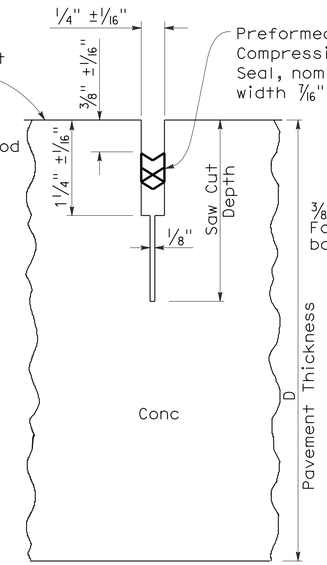

COMPRESSION SEAL

TYPE A2

Longitudinal Contraction Joints

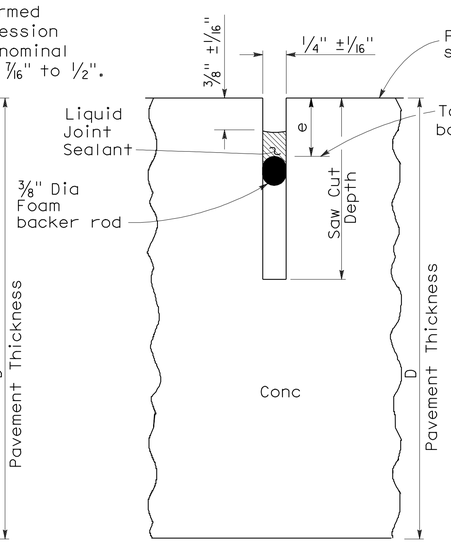

LIQUID SEALANT

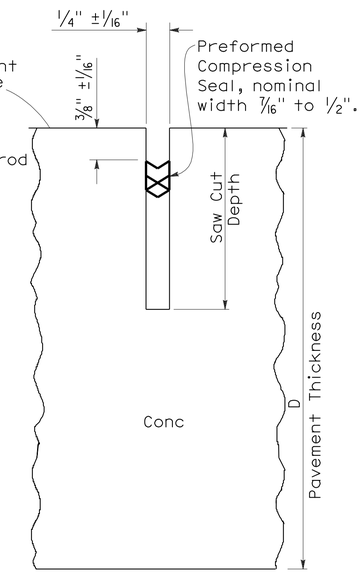

COMPRESSION SEAL

TYPE B

Longitudinal or Transverse Contraction Joint

LIQUID SEALANT RESERVOIR DEPTH

LIQUID SEALANT MATERIAL	3/8" Joint Width Type A1		1/4" Joint Width Type A2		1/4" Joint Width Type B
	DIMENSION		DIMENSION		DIMENSION
	a	b	c	d	e
SILCONE	1" ±1/16"	5/8" ±1/16"	15/16" ±1/16"	9/16" ±1/16"	9/16" ±1/16"
ASPHALT RUBBER	1 3/16" ±1/16"	3/4" ±1/16"	1 1/16" ±1/16"	11/16" ±1/16"	11/16" ±1/16"

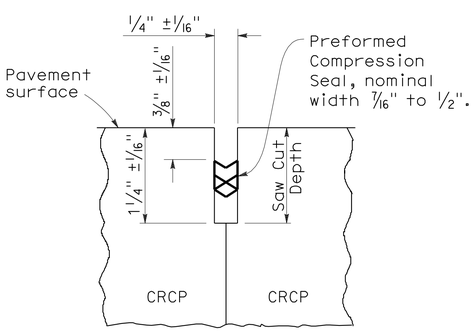

COMPRESSION SEAL

TYPE C

Transverse and Longitudinal Construction Joints (For CRCP)

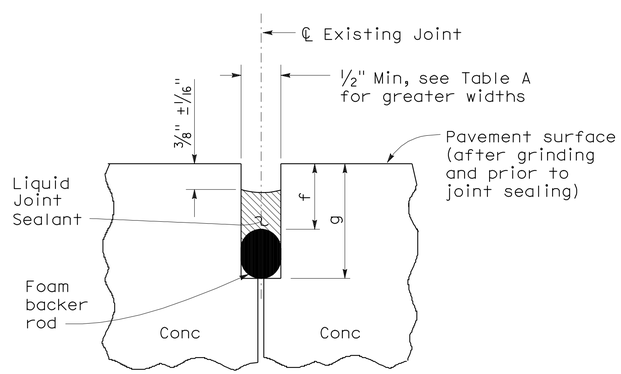

LIQUID SEALANT

TYPE R

Retrofit Transverse and Longitudinal Joints

TABLE A (TYPE R JOINT)

Sawn Joint Width	Backer Rod Diameter ± 1/16"	DIMENSION "f"	DIMENSION "g"
1"	1 5/16"	7/8"	2 1/4"
7/8"	1 3/16"	13/16"	2"
3/4"	1"	3/4"	1 3/4"
5/8"	7/8"	11/16"	1 1/2"
1/2"	11/16"	5/8"	1 1/4"

STATE OF CALIFORNIA
DEPARTMENT OF TRANSPORTATION

CONCRETE PAVEMENT-JOINT DETAILS

NO SCALE

RSP P20 DATED MAY 15, 2009 SUPERSEDES STANDARD PLAN P20
DATED MAY 1, 2006 - PAGE 128 OF THE STANDARD PLANS BOOK DATED MAY 2006.

REVISED STANDARD PLAN RSP P20

2006 REVISED STANDARD PLAN RSP P20

5-8-09

DIST	COUNTY	ROUTE	POST MILES TOTAL PROJECT	SHEET NO.	TOTAL SHEETS
11	SD	54,805	1.8,5.5/9.4	485	635

William K. Farnbach
REGISTERED CIVIL ENGINEER

May 15, 2009
PLANS APPROVAL DATE

REGISTERED PROFESSIONAL ENGINEER William K. Farnbach No. C49042 Exp. 9-30-10 CIVIL STATE OF CALIFORNIA

The State of California or its officers or agents shall not be responsible for the accuracy or completeness of electronic copies of this plan sheet.

To accompany plans dated 12-5-11

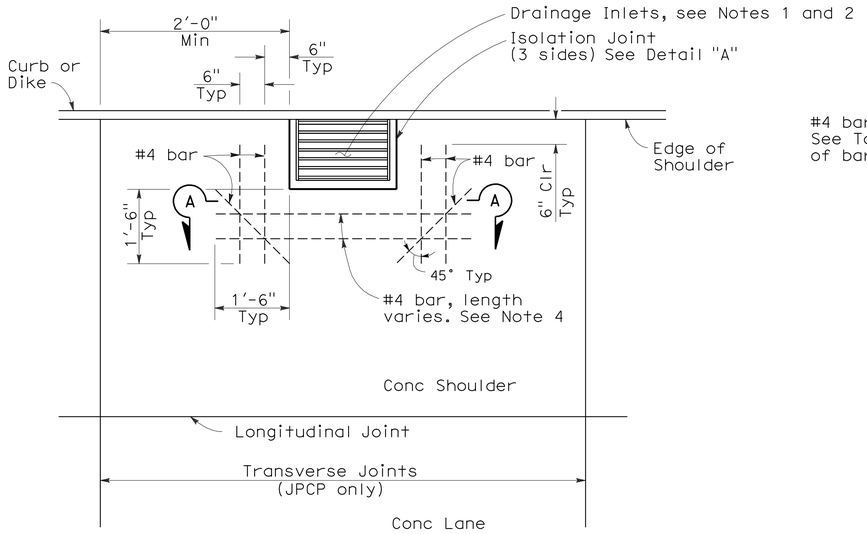

CASE 1

Transverse joint more than 2'-0" clear of drainage inlet wall or no transverse joint

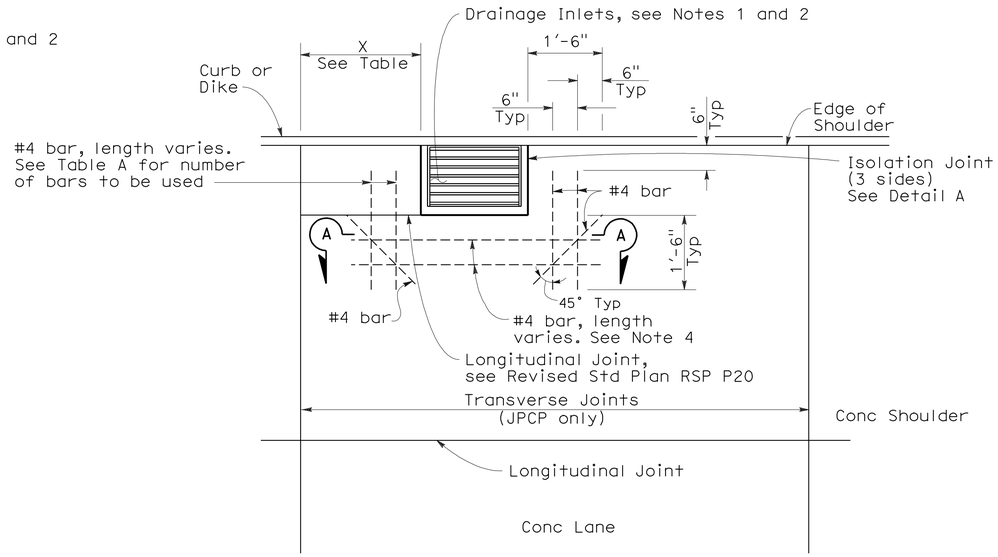

CASE 3

Transverse joint within 2'-0" of drainage inlet wall, or matches drainage inlet wall.

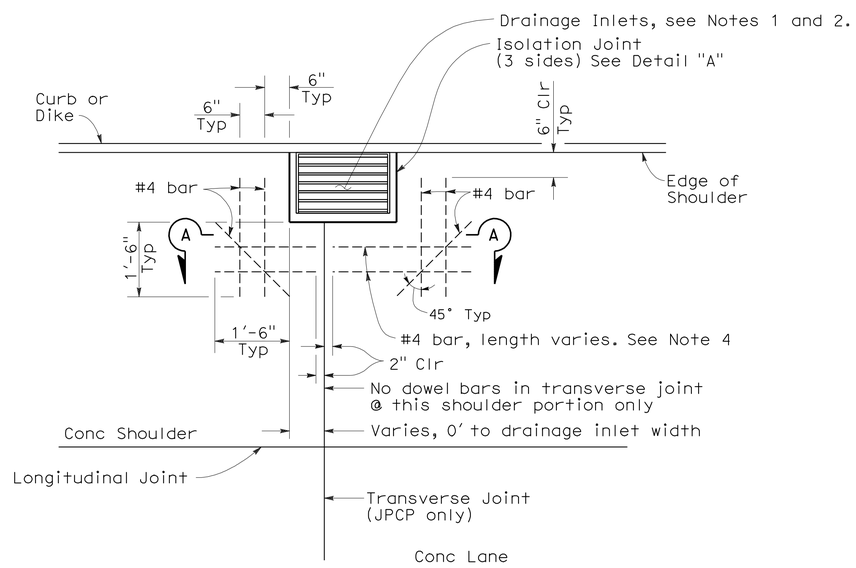

CASE 2

Transverse joint intersects drainage inlet, or matches drainage inlet wall.

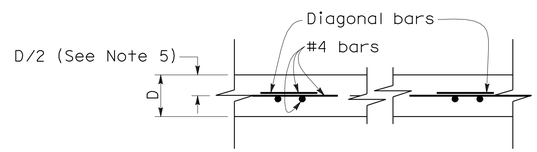

SECTION A-A

D = Pavement Thickness

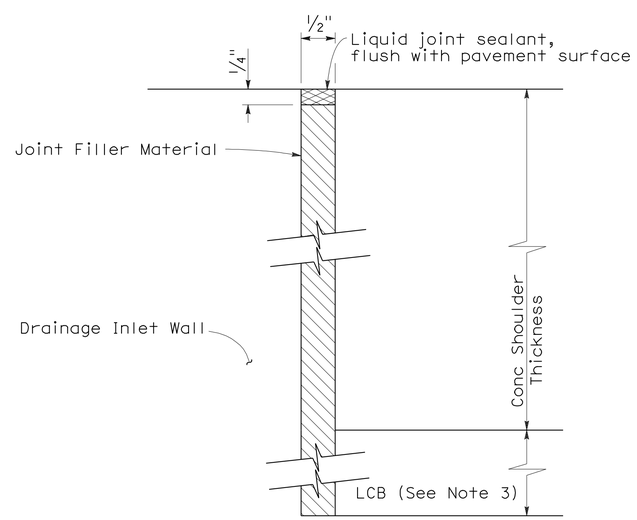

DETAIL "A"

ISOLATION JOINT AROUND DRAINAGE INLET

NOTES:

1. Refer to Project Plans for location and Type of drainage inlets.
2. Top of inlet shall be flush with shoulder surface.
3. Extend joint filler material to bottom of Lean Concrete Base. Where Lean Concrete Base is not used as base material, the joint filler material shall only extend to the bottom of the new concrete pavement.
4. For Jointed Plain Concrete Pavement only. For Continuously Reinforced Concrete Pavement, terminate pavement steel reinforcement 2" clear from all outside edges of isolation joint.
5. For Jointed Plain Concrete Pavement only. For Continuously Reinforced Concrete Pavement, see New Standard Plan NSP P4.
6. Dowel and tie bars not shown, see Revised Standard Plan RSP P1.

TABLE A

DISTANCE X	BARS REQUIRED
2'-0" to 1'-6"	2
1'-6" to 9"	1 @ X/2
9" or less	None

STATE OF CALIFORNIA
DEPARTMENT OF TRANSPORTATION

CONCRETE PAVEMENT-DRAINAGE INLET DETAILS No. 1

NO SCALE

RSP P45 DATED MAY 15, 2009 SUPERSEDES STANDARD PLAN P45 DATED MAY 1, 2006 - PAGE 132 OF THE STANDARD PLANS BOOK DATED MAY 2006.

REVISED STANDARD PLAN RSP P45

2006 REVISED STANDARD PLAN RSP P45

4-2-09

DIST	COUNTY	ROUTE	POST MILES TOTAL PROJECT	SHEET NO.	TOTAL SHEETS
11	SD	54,805	1.8,5.5/9.4	486	635

REGISTERED CIVIL ENGINEER

June 15, 2007
PLANS APPROVAL DATE

REGISTERED PROFESSIONAL ENGINEER Glenn DeCou No. C34547 Exp. 9-30-07 CIVIL STATE OF CALIFORNIA

The State of California or its officers or agents shall not be responsible for the accuracy or completeness of electronic copies of this plan sheet.

To accompany plans dated 12-5-11

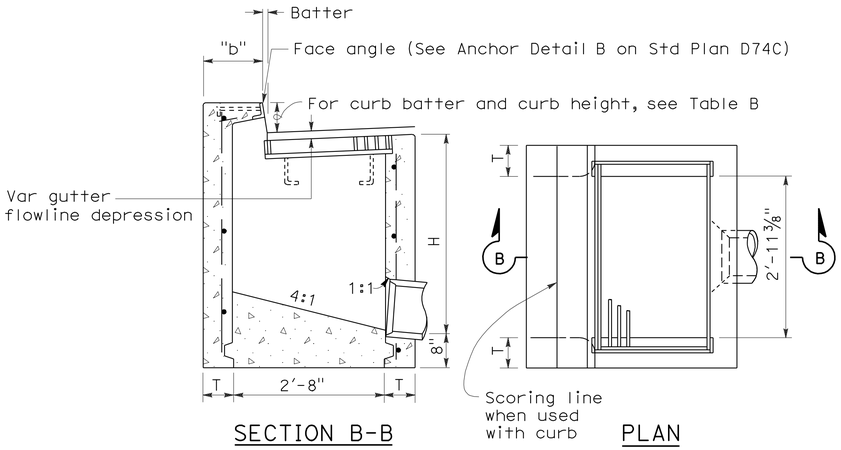

SECTION B-B PLAN

TYPE GO

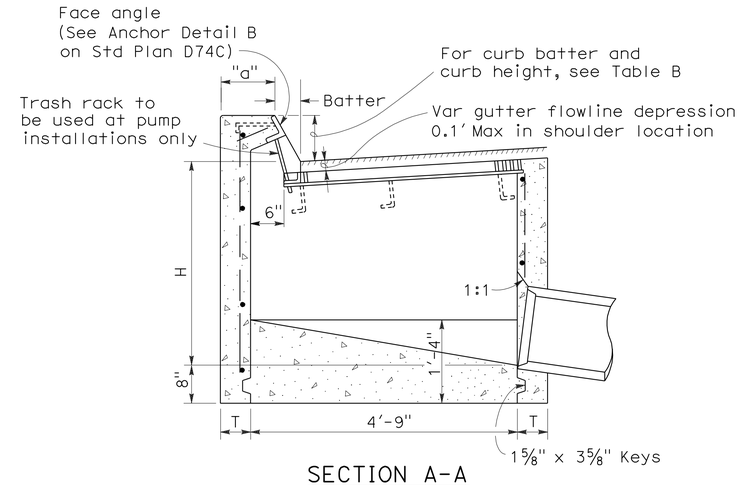

SECTION A-A

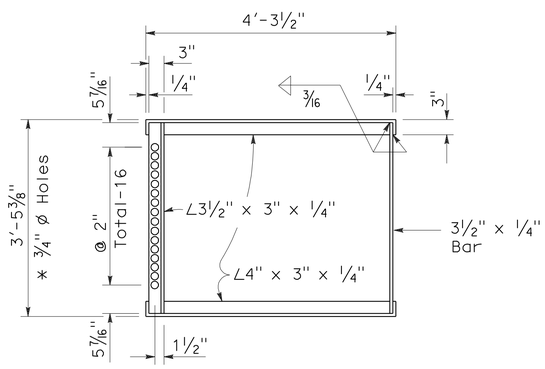

* 3/4" ø Holes required only with trash rack

GRATE FRAME FOR TYPE GDO INLET

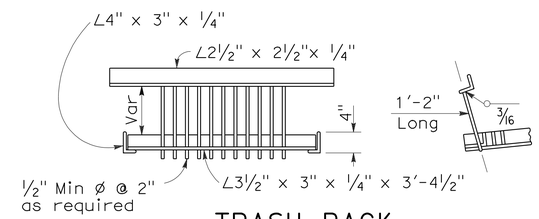

TRASH RACK

(For use with pump installation)

TABLE A

CONCRETE QUANTITIES				
	H=3'-0" TO 8'-0" (T=6")		H=8'-1" TO 20'-0" (T=8")	
TYPE	H=3'-0" (CY)	ADDITIONAL PCC PER FOOT (CY)	H=8'-1" (CY)	ADDITIONAL PCC PER FOOT (CY)
GO	1.24	0.245	3.39	0.346
GDO	1.62	0.322	4.36	0.446

Table based on 8" floor slab, no deduction for pipe openings, and curb type giving highest quantity of concrete. No deductions or adjustments are to be made to these quantities because of pipe openings, different floor alternatives or different curb type.

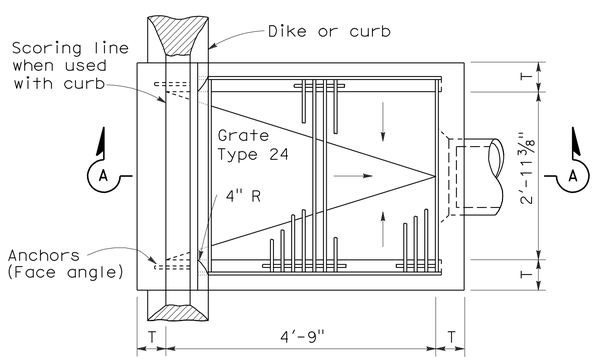

PLAN

TYPE GDO

TABLE B

CURB TYPE	NORMAL CURB HEIGHT	CURB BATTER	"a" DIMENSION	"b" DIMENSION
A1-6	6"	1 1/2"	T+7 1/2"	T+6 1/2"
A1-8	8"	2"	T+7"	T+6"
B1-6	6"	4"	T+5"	T+4"
Type A Dike	6"	3"	T+6"	T+5"

NOTES:

1. "H" is the difference in elevation between the outlet pipe flow line and the normal gutter grade line undepressed.
2. For "T" wall thickness, see Table A below.
3. Wall reinforcing not required when "H" is 8'-0" or less and the unsupported width or length is 7'-0" or less. Walls exceeding these limits shall be reinforced with #4 @ 18"± centers placed 1 1/2" clear to inside of box unless otherwise shown.
4. Inlet bottom reinforcing not required. See Standard Plan D74C for alternative reinforced bottom.
5. Steps - None required where "H" is less than 2'-6" Where "H" is 2'-6" or more, install steps with lowest rung 1'-0" above the floor and highest rung not more than 6" below top of inlet. The distance between steps shall not exceed 1'-0" and shall be uniform throughout the length of the wall. Place steps in the wall without an opening. Step inserts may be substituted for the bar steps. Step Inserts shall comply with State Industrial Safety requirements. See Standard Plan D74C for step details.
6. When shown on the project plans, place a 3/4" plain round protection bar horizontally across the length of the opening and bend back 4" into the inlet wall on each side.
7. Pipe(s) can be placed in any wall.
8. Curb section shall match adjacent curb.
9. Basin floors shall have wood trowel finish and shall slope toward the outlet pipe as shown.
10. Galvanizing - See Standard Specifications or Special Provisions.
11. See Standard Plan D77A and D77B for grate and frame details and weights of miscellaneous iron and Steel.
12. See Standard Plan D78A for gutter depression details.
13. Full penetration butt welds may be substituted for the fillet welds on all anchors.
14. Standard square, hexagon, round or equivalent headed anchors may be substituted for the right angle hooks on the anchors shown on this plan.
15. Cast-in-place or precast alternative is optional with contractor. See Standard Specifications.
16. Cast-in-place inlets to be formed around all pipes/stubs intersecing the inlet and concrete poured in one continuous operation. Precast inlets shall have mortared pipe connections conforming to details for Type GCP inlets on Standard Plan D75B. See Standard Specifications for mortar composition.

STATE OF CALIFORNIA
DEPARTMENT OF TRANSPORTATION

DRAINAGE INLETS

NO SCALE

RSP D74B DATED JUNE 15, 2007 SUPERSEDES STANDARD PLAN D74B DATED MAY 1, 2006 - PAGE 150 OF THE STANDARD PLANS BOOK DATED MAY 2006.

REVISED STANDARD PLAN RSP D74B

2006 REVISED STANDARD PLAN RSP D74B

4-16-07

DIST	COUNTY	ROUTE	POST MILES TOTAL PROJECT	SHEET NO.	TOTAL SHEETS
11	SD	54,805	1.8,5.5/9.4	487	635

REGISTERED CIVIL ENGINEER

June 6, 2008
PLANS APPROVAL DATE

REGISTERED PROFESSIONAL ENGINEER Raymond Don Tsztoo No. C37332 Exp. 6-30-08 CIVIL STATE OF CALIFORNIA

The State of California or its officers or agents shall not be responsible for the accuracy or completeness of electronic copies of this plan sheet.

To accompany plans dated 12-5-11

2006 REVISED STANDARD PLAN RSP D75B

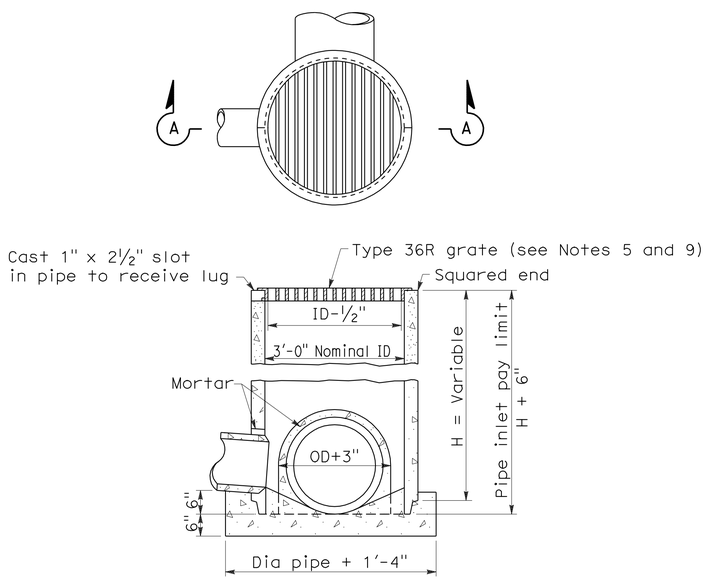

SECTION A-A

TYPE GCP

CONCRETE PIPE INLET WITH GRATE

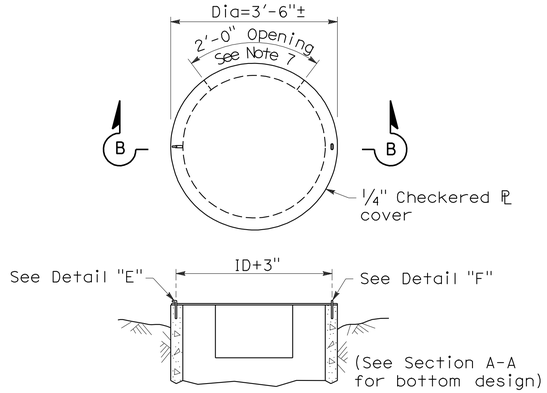

SECTION B-B

TYPE OCP or OCPI

CONCRETE PIPE INLET WITH STEEL COVER
(See Note 6)

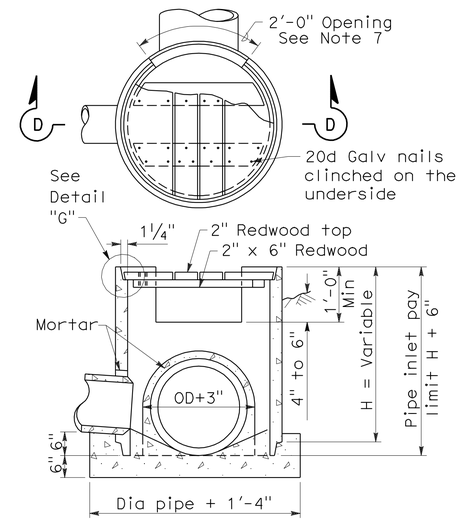

SECTION D-D

TYPE OCP or OCPI

CONCRETE PIPE INLET WITH REDWOOD COVER
(See Notes 6 and 10)

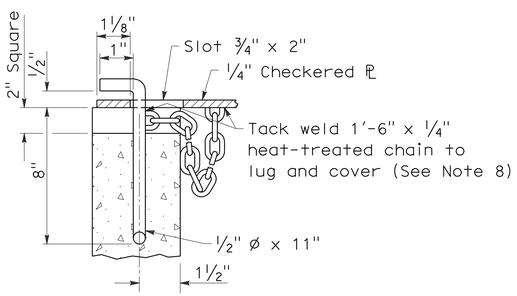

DETAIL "E"

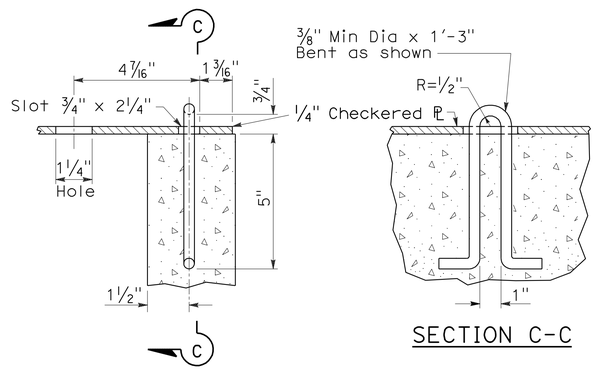

DETAIL "F"

SECTION C-C

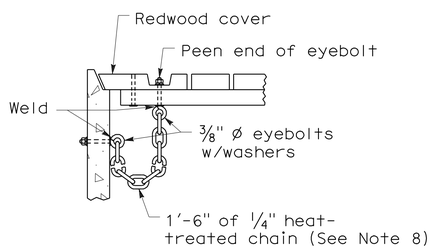

DETAIL "G"

NOTES:

1. For details of steel pipe inlets, see Standard Plan D75A.
2. For details of ladder and steps and when ladder or steps are required, see Standard Plan D75C.
3. Inlet pipes shall not protrude into basin.
4. Except for inlets used for junction boxes, basin floors shall have minimum slope of 4:1 from all directions toward outlet pipe, and a wood trowel finish.
5. See Revised Standard Plan RSP D77A and Standard Plan D77B for Grate and Frame Details and Weights of Miscellaneous Iron and Steel.
6. Designation of Type OCPI pipe inlets on plans indicates trash racks are to be furnished and installed on all side openings. See Standard Plan D75C for Trash Rack details.
7. More than one side opening may be required. Location and number as ordered by the Engineer. Opening may be cast in pipe.
8. Chain to be provided when specified.
9. Place pipe so bars of grate will be parallel with main surface flow.
10. Redwood covers shall only be placed at locations designated on the plans.

STATE OF CALIFORNIA
DEPARTMENT OF TRANSPORTATION

CONCRETE PIPE INLETS

NO SCALE

RSP D75B DATED JUNE 6, 2008 SUPERSEDES STANDARD PLAN D75B
DATED MAY 1, 2006 - PAGE 153 OF THE STANDARD PLANS BOOK DATED MAY 2006.

REVISED STANDARD PLAN RSP D75B

DIST	COUNTY	ROUTE	POST MILES TOTAL PROJECT	SHEET NO.	TOTAL SHEETS
11	SD	54,805	1.8,5.5/9.4	488	635

Raymond Don Tsztoo
REGISTERED CIVIL ENGINEER

January 18, 2008
PLANS APPROVAL DATE

REGISTERED PROFESSIONAL ENGINEER
Raymond Don Tsztoo
No. C37332
Exp. 6-30-08
CIVIL
STATE OF CALIFORNIA

The State of California or its officers or agents shall not be responsible for the accuracy or completeness of electronic copies of this plan sheet.

To accompany plans dated 12-5-11

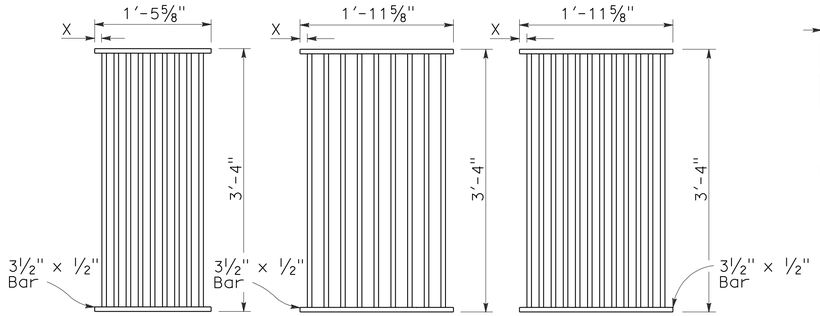

TYPE 18-9

1⅜" Clear spacing. Use within the roadbed on highways where bicycles and pedestrians are excluded.

TYPE 24-9

2" Clear spacing. Use in locations off the roadbed on all types of highways.

TYPE 24-12

1⅜" Clear spacing. Use within the roadbed on highways where bicycles and pedestrians are excluded.

RECTANGULAR GRATE DETAILS

(See table below)

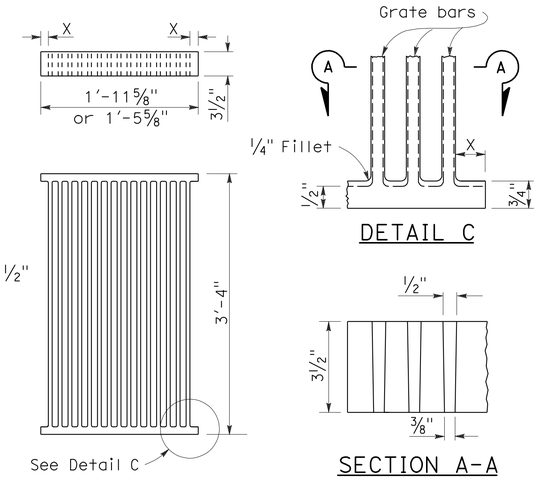

DETAIL C

SECTION A-A

ALTERNATIVE CAST NODULAR IRON GRATE OR CAST STEEL GRATE

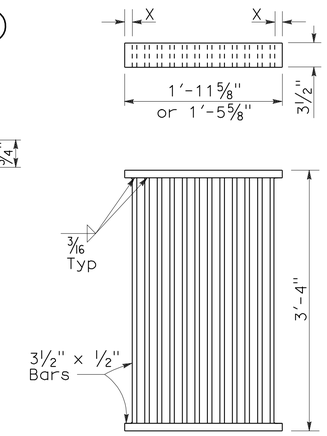

ALTERNATIVE WELDED GRATE

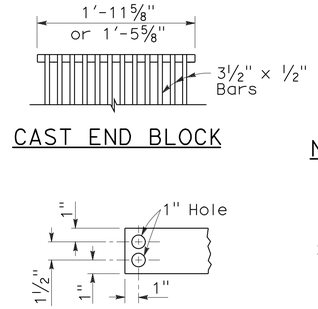

CAST END BLOCK

END OF BAR

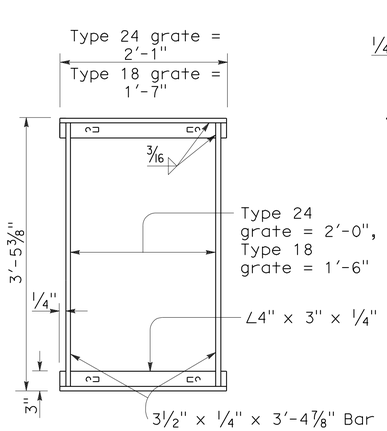

TYPICAL FRAME

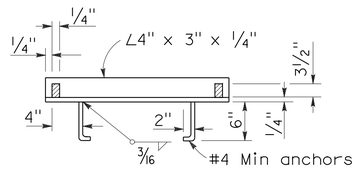

CROSS SECTION

(Thru frame)

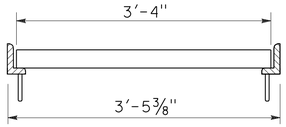

LONGITUDINAL SECTION

(Thru frame and grate)

RECTANGULAR FRAME DETAILS

(For all rectangular grates)

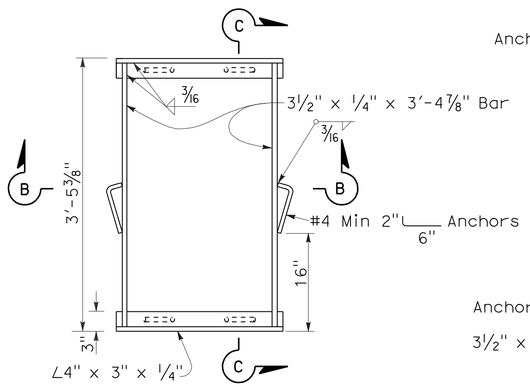

TYPICAL FRAME

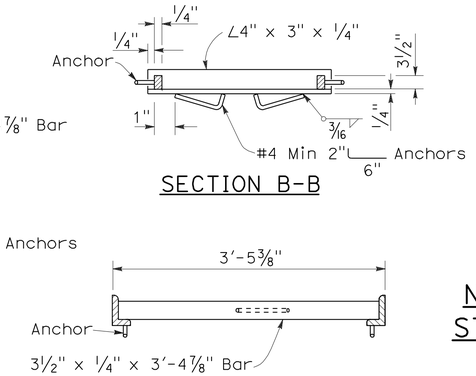

SECTION B-B

SECTION C-C

ALTERNATIVE ANCHOR FOR RECTANGULAR FRAME

(For details not shown, See Rectangular Frame Details)

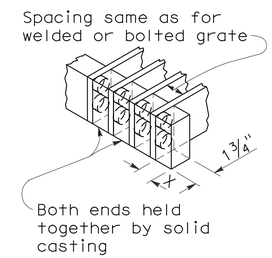

ALTERNATIVE CAST NODULAR IRON OR CAST STEEL END BLOCK GRATE

NOTES:

1. Grate type numbers refer to approximate width of grate in inches and number of bars, respectively.
2. Contractor has the option of using cast nodular iron, cast steel, welded, bolted, or cast end block grate.
3. See Special Provisions for requirements pertaining to galvanizing or asphalt dipping of grates and frames.
4. Rounded top of bars optional on all grates.
5. Pipe inlets with a grate shall be placed so that bars parallel direction of principle surface flow.
6. Full penetration butt welds may be substituted for the fillet welds on all anchors.
7. Standard square, hexagon, round or equivalent headed anchors may be substituted for the right angle hooks on the anchors shown on this plan.
8. Grate and frame weights are based on welded grates (weights of face angles, steps, protection bars, etc. are not included).

GRATE BAR SPACING TABLE

TYPE	No. OF BARS	CLEAR BAR SPACING	X
18-9	9	1⅜"	1 1/16"
24-9	9	2"	1 9/16"
24-12	12	1⅜"	1¼"

INLET TYPE	COVER TYPE	WEIGHT LB
OS	PLATE	174
OL-7	PLATE	170
OL-10	PLATE	170
OL-14	PLATE	170
OL-21	PLATE	170
OCP	PLATE	112
OCPI	PLATE	112
OCPI	REDWOOD	42
OMP	PLATE	177
OMPI	PLATE	177

INLET TYPE	GRATE TYPE	No. OF GRATES	WEIGHT LB
GDO	24-12	2	634
GOL-7	24-12	1	326
GOL-10	24-12	1	326
GO,G1,G2,G3,G4 (TYPE 24)	24-9	1	263
	24-12	1	326
G4 (TYPE 18),G5,G6	18-9	1	249
GT1	18-9	2	498
GT2	18-9	2	498
GT3	24-12	2	652
GT4	24-12	2	652
TRASH RACK			22

BASIS FOR MISC IRON & STEEL FINAL PAY WEIGHTS FOR DRAINAGE INLETS

(See General Notes, No 8)

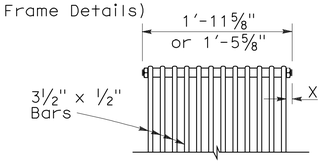

BOLTED END BLOCK

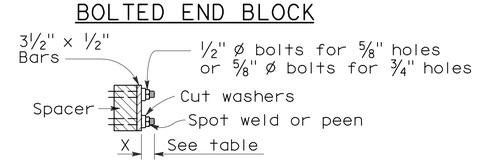

BOLTING DETAIL

ALTERNATIVE BOLTED GRATE

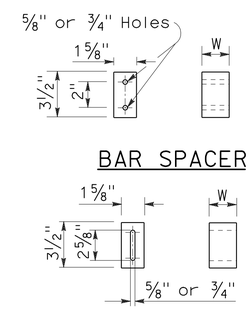

BAR SPACER

ALTERNATIVE SPACER

W = 1⅜" or 2"

STATE OF CALIFORNIA
DEPARTMENT OF TRANSPORTATION

GRATE DETAILS

NO SCALE

RSP D77A DATED JANUARY 18, 2008 SUPERSEDES STANDARD PLAN D77A
DATED MAY 1, 2006 - PAGE 155 OF THE STANDARD PLANS BOOK DATED MAY 2006.

REVISED STANDARD PLAN RSP D77A

2006 REVISED STANDARD PLAN RSP D77A

12-14-07

DIST	COUNTY	ROUTE	POST MILES TOTAL PROJECT	SHEET NO.	TOTAL SHEETS
11	SD	54,805	1.8,5.5/9.4	489	635

Raymond Don Tsztoo
REGISTERED CIVIL ENGINEER

June 6, 2008
PLANS APPROVAL DATE

REGISTERED PROFESSIONAL ENGINEER
Raymond Don Tsztoo
No. C37332
Exp. 6-30-08
CIVIL
STATE OF CALIFORNIA

The State of California or its officers or agents shall not be responsible for the accuracy or completeness of electronic copies of this plan sheet.

To accompany plans dated 12-5-11

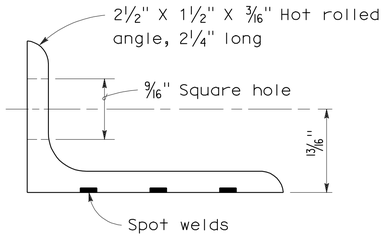

ANGLE

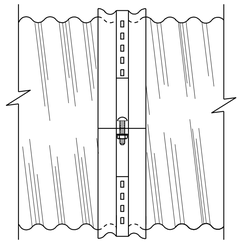

SIDE VIEW
ANGLE

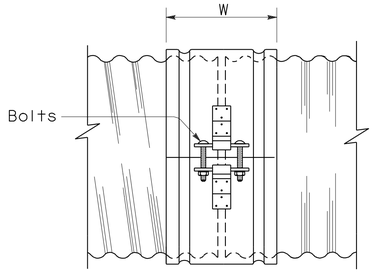

SIDE VIEW
SINGLE BAR AND STRAP

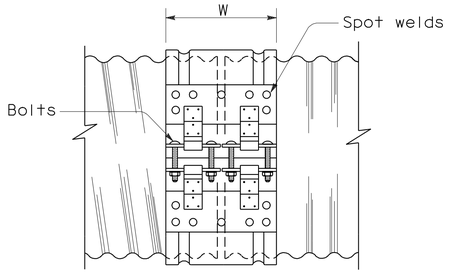

SIDE VIEW
DOUBLE BAR AND STRAP

NOTES:

1. All ferrous metal coupling band connection hardware shall be galvanized or electroplated in accordance with the Standard Specifications.
2. Dimensions and thicknesses shown are minimum.
3. Spot welds shall develop minimum required strength of strap.
4. Fillet welds of equivalent strength may be substituted for spot welds or rivets.
5. Dimension depends upon whether end condition is lips up or lips down.

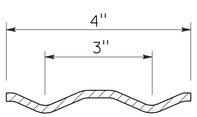

SECTION

H-4 HUGGER BAND

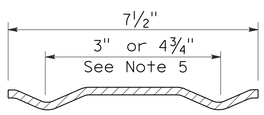

SECTION

H-7 HUGGER BAND

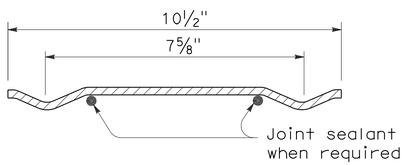

SECTION

H-10 HUGGER BAND

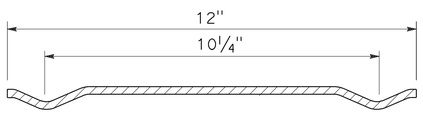

SECTION

H-12 HUGGER BAND

HUGGER COUPLING BANDS

STATE OF CALIFORNIA
DEPARTMENT OF TRANSPORTATION

CORRUGATED METAL PIPE COUPLING DETAILS No. 4 HUGGER COUPLING BANDS

NO SCALE

RSP D97D DATED JUNE 6, 2008 SUPERSEDES STANDARD PLAN D97D
DATED MAY 1, 2006 - PAGE 186 OF THE STANDARD PLANS BOOK DATED MAY 2006.

REVISED STANDARD PLAN RSP D97D

2006 REVISED STANDARD PLAN RSP D97D

3-24-08

DIST	COUNTY	ROUTE	POST MILES TOTAL PROJECT	SHEET NO.	TOTAL SHEETS
11	SD	54,805	1.8,5.5/9.4	490	635

Raymond Don Tsztoo
REGISTERED CIVIL ENGINEER

June 6, 2008
PLANS APPROVAL DATE

REGISTERED PROFESSIONAL ENGINEER Raymond Don Tsztoo No. C37332 Exp. 6-30-08 CIVIL STATE OF CALIFORNIA

The State of California or its officers or agents shall not be responsible for the accuracy or completeness of electronic copies of this plan sheet.

ANNULAR AND HELICAL PROFILE

COUPLING TYPE	PIPE CORRUGATION	PIPE SIZE	W OR A	PIPE WALL THICKNESS CSP	PIPE WALL THICKNESS CAP	BAND THICKNESS CSP	BAND THICKNESS CAP	BAR AND STRAP (CSP ONLY) STRAP THICKNESS	BOLTS Dia	BAR Dia	BAR YIELD STRENGTH	ANGLE DIMENSIONS CSP	ANGLE DIMENSIONS CAP	BOLTS (No.- Dia) CSP	BOLTS (No.- Dia) CAP	RIVETS ANGLE TO BAND CSP	RIVETS ANGLE TO BAND CAP	SPOT WELDS ANGLE TO BAND CSP
TWO PIECE INTEGRAL FLANGE	1½′ × ¼"	6"-10"	7"	0.052"-0.079"	0.048"-0.060"	0.052"	0.060"							2-⅜"	2-⅜"			
		12"-18"	7"	0.052"-0.079"		0.064"								2-½"				
	2⅔" × ½"	12"-24"	7"	0.052"-0.079"	0.060"-0.105"	0.064"	0.060"							2-½"	2-½"			
UNIVERSAL	2⅔" × ½"	THROUGH 36"	12"	0.052"-0.138"	0.060"-0.135"	0.052"	0.060"					2" × 2" × 3/16"	2" × 2" × 3/16"	3-½"	3-½"	3-⅜"	3-⅜"	3-½"
		42"-60"	12"	0.052"-0.168"	0.075"-0.164"	0.052"	0.060"					2" × 2" × 3/16"	2" × 2" × 3/16"	3-½"	3-½"	3-⅜"	3-⅜"	5-½"
		THROUGH 72"	12"	0.052"-0.168"	0.164"	0.052"	0.105"	0.079"	½"	⅞"	32 ksi	2" × 2" × 3/16"	2" × 2" × 3/16"	3-½"	3-½"	3-⅜"	3-⅜"	5-½"
		78"-84"	16¼"	0.168"		0.079"		DOUBLE 0.079"	½"	⅞"	32 ksi							
ANNULAR	2⅔" × ½"	THROUGH 36"	7"	0.064"-0.138"	0.060"-0.135"	0.052"	0.060"	0.079"	½"	⅞"	32 ksi	2" × 2" × 3/16"	2" × 2" × 3/16"	2-½"	2-½"	3-⅜"	3-⅜"	3-½"
		42"-72"	12"	0.064"-0.168"	0.075"-0.164"	0.052"	0.105"	0.079"	½"	⅞"	32 ksi	2" × 2" × 3/16"	2" × 2" × 3/16"	3-½"	3-½"	3-⅜"	3-⅜"	5-½"
		78"-84"	12"	0.168"		0.079"		0.109"	½"	⅞"	45 ksi	2" × 2" × 3/16"		3-½"		3-⅜"		5-½"
	3" × 1"	48"-90"	14"	0.064"-0.109"		0.052"		0.079"	½"	⅞"	32 ksi	2" × 2" × 3/16"		3-½"		3-⅜"		5-½"
		96"-120"	14"	0.079"-0.109"		0.052"		0.109"	½"	⅞"	45 ksi	2" × 2" × 3/16"		3-½"		4-⅜"		
		42"-108"	14"		0.060"-0.135"		0.060"						2" × 2" × 3/16"		3-½"		3-⅜"	
HELICAL	2⅔" × ½"	THROUGH 36"	12"	0.052"-0.138"	0.060"-0.135"	0.052"	0.060"	0.079"	½"	⅞"	32 ksi	2" × 2" × 3/16"	2" × 2" × 3/16"	3-½"	3-½"	3-⅜"	3-⅜"	3-½"
		42"-72"	12"	0.052"-0.168"	0.075"-0.164"	0.052"	0.060"	0.079"	½"	⅞"	32 ksi	2" × 2" × 3/16"	2" × 2" × 3/16"	3-½"	3-½"	3-⅜"	3-⅜"	5-½"
		78"-84"	12"	0.168"		0.079"		0.109"	½"	⅞"	45 ksi	2" × 2" × 3/16"		3-½"		3-⅜"		5-½"
	3" × 1"	48"-90"	14"	0.064"-0.109"		0.052"		0.079"	½"	⅞"	32 ksi	2" × 2" × 3/16"		3-½"		3-⅜"		5-½"
		96"-120"	14"	0.079"-0.109"		0.052"		0.109"	½"	⅞"	45 ksi	2" × 2" × 3/16"		3-½"		4-⅜"		
		42"-108"	14"		0.060"-0.135"		0.060"						2" × 2" × 3/16"		3-½"		3-⅜"	
HUGGER	2⅔" × ½" REROLLED END	12"-54"	4"	0.052"-0.109"		0.052"						2½" × 1½" × 3/16"	2½" × 1½" × 3/16"	1-½"				3-½"
		60"-66"	4"	0.109"		0.064"						2½" × 1½" × 3/16"	2½" × 1½" × 3/16"	1-½"				3-½"
		36"-48"	4"	0.138"		0.064"						2½" × 1½" × 3/16"	2½" × 1½" × 3/16"	1-½"				3-½"
		THROUGH 72"	10½"	0.052"-0.168"		0.052"		0.079"	½"	⅞"	32 ksi							
		78"-84"	10½"	0.168"		0.079"		0.109"	½"	⅞"	45 ksi							
	3" × 1" REROLLED END	48"-90"	10½"	0.064"-0.109"		0.052"		0.079"	½"	⅞"	32 ksi							
		96"-120"	10½"	0.079"-0.109"		0.052"		0.109"	½"	⅞"	45 ksi							
	5" × 1" REROLLED END	48"-66"	7½"	0.064"-0.109"		0.064"		0.079"	½"	⅞"	32 ksi	2½" × 1½" × 3/16"	2½" × 1½" × 3/16"	1-½"				3-½"
		72"-90"	7½"	0.064"-0.079"		0.064"		0.079"	½"	⅞"	32 ksi	2½" × 1½" × 3/16"	2½" × 1½" × 3/16"	1-½"				3-½"
		48"-90"	7½"	0.064"-0.138"		0.064"		0.079"	½"	⅞"	32 ksi							
		48"-120"	12" SEE	0.064"-0.109"		0.064"		0.079"	½"	⅞"	32 ksi							
		48"-84"	12" NOTE	0.138"		0.064"		0.079"	½"	⅞"	32 ksi							
		90"-120"	12" 11	0.138"		0.064"		DOUBLE 0.079"	½"	⅞"	32 ksi							

SPIRAL RIB PROFILE

COUPLING TYPE	PIPE CORRUGATION	PIPE SIZE	W	PIPE WALL THICKNESS SSRP	PIPE WALL THICKNESS ASRP	BAND THICKNESS SSRP	BAND THICKNESS ASRP	BAR AND STRAP (SSRP ONLY) STRAP THICKNESS	BOLTS Dia	BAR Dia	BAR YIELD STRENGTH	ANGLE DIMENSIONS SSRP	ANGLE DIMENSIONS ASRP	BOLTS (No.- Dia) SSRP	BOLTS (No.- Dia) ASRP	RIVETS ANGLE TO BAND SSRP	RIVETS ANGLE TO BAND ASRP	SPOT WELDS ANGLE TO BAND SSRP
ANNULAR	2⅔" × ½" * REROLLED END	24"-36"	12"	0.064"-0.109"	0.060"-0.105"	0.052"	0.060"	0.079"	½"	⅞"	32 ksi	2" × 2" × 3/16"	2" × 2" × 3/16"	3-½"	3-½"	3-⅜"	3-⅜"	5-½"
		42"-60"	12"	0.064"-0.109"	0.075"-0.105"	0.052"	0.105"	0.079"	½"	⅞"	32 ksi	2" × 2" × 3/16"	2" × 2" × 3/16"	3-½"	3-½"	3-⅜"	3-⅜"	5-½"
		66"-72"	12"	0.064"-0.109"		0.052"		0.079"	½"	⅞"	32 ksi	2" × 2" × 3/16"	2" × 2" × 3/16"	3-½"	3-½"	3-⅜"	3-⅜"	5-½"
		78"-114"	12"	0.079"-0.109"		0.079"		0.109"	½"	⅞"	45 ksi	2" × 2" × 3/16"	2" × 2" × 3/16"	3-½"	3-½"	3-⅜"	3-⅜"	5-½"
HUGGER	2⅔" × ½" * REROLLED END	24"-72"	10½"	0.064"-0.109"		0.052"		0.079"	½"	⅞"	32 ksi							
		78"-84"	10½"	0.109"		0.079"		0.109"	½"	⅞"	45 ksi							

* See Note 14.

14. All profiles of Spiral Rib Pipe (¾" × ¾" ribs at 7½" pitch and ¾" × 1" ribs at 11½" pitch in both steel and aluminum and ¾" × 1" ribs at 8½" pitch in steel only) shall be manufactured with rerolled ends. Corrugation profile of the rerolled ends shall be 2⅔" × ½" annual corrugations with a minimum of two full corrugations at each end.

NOTES:

To accompany plans dated 12-5-11

1. All ferrous metal coupling band connection hardware shall be galvanized or electro-plated in accordance with the Standard Specifications.
2. For helically corrugated coupling bands, the connection angles may be oriented parallel to the pipe axis, provided connecting holes are slotted lengthwise sufficiently to allow adjustment for the helix angle.
3. Tension strap may be connected to band with either spot welds or fillet welds that develop minimum required strength of strap.
4. Use 1¼" gage line dimension on attached angle leg for rivets and spot welds.
5. Band thickness shall not be less than:
   a. 3 standard thicknesses lighter than the thickness of the pipe for Corrugated Steel Pipe.
   b. 2 standard thicknesses lighter than the thickness of the pipe and in no case lighter than 0.060" for Corrugated Aluminum Pipe.
6. Dimensions, thicknesses and strengths shown are minimum.
7. For pipe arches use same width band as for round pipe of equal periphery.
8. Fillet welds of equivalent strenght may be substituted for spot welds or rivets.
9. Spot welds shall develop minimum required strength of strap.
10. Pipe with rerolled ends having at least two 2⅔" × ½" annular corrugations at each end with or without an upturned flange may be connected with any of the annular coupling bands shown for pipe of the same diameter and wall thickness and having 2⅔" × ½" corrugations.
11. In the case of H-12 huggerbands, two piece bands are required for diameters through 96" and three piece bands are required for diameters 102" through 120".
12. Two piece bands are required for pipes greater than 42" diameter.
13. The 2¼" × 2" × 0.109" thick galvanized die-formed angle connector may be used in lieu of the 2" × 2" × 3/16" angle connector for standard joints only on pipes through 72" diameter.

STATE OF CALIFORNIA
DEPARTMENT OF TRANSPORTATION

CORRUGATED METAL PIPE COUPLING DETAILS No. 5 STANDARD JOINT

NO SCALE

RSP D97E DATED JUNE 6, 2008 SUPERSEDES STANDARD PLAN D97E
DATED MAY 1, 2006 - PAGE 187 OF THE STANDARD PLANS BOOK DATED MAY 2006.

REVISED STANDARD PLAN RSP D97E

2006 REVISED STANDARD PLAN RSP D97E

4-2-08

DIST	COUNTY	ROUTE	POST MILES TOTAL PROJECT	SHEET NO.	TOTAL SHEETS
11	SD	54,805	1.8,5.5/9.4	491	635

Raymond Don Tsztoo
REGISTERED CIVIL ENGINEER

March 7, 2008
PLANS APPROVAL DATE

REGISTERED PROFESSIONAL ENGINEER
Raymond Don Tsztoo
No. C37332
Exp. 6-30-08
CIVIL
STATE OF CALIFORNIA

The State of California or its officers or agents shall not be responsible for the accuracy or completeness of electronic copies of this plan sheet.

To accompany plans dated 12-5-11

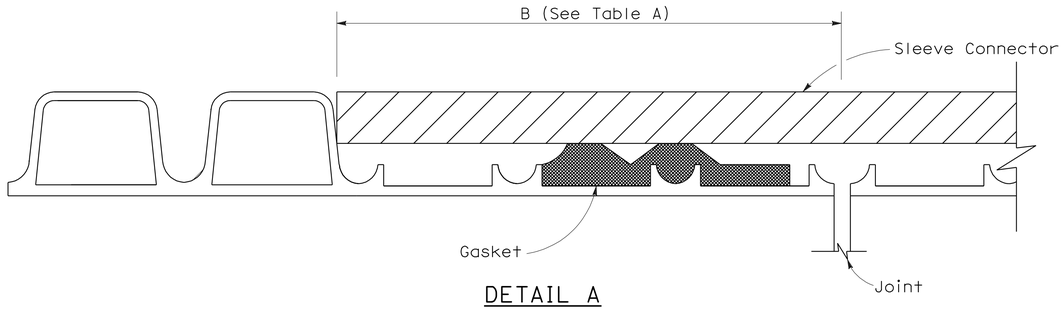

DETAIL A

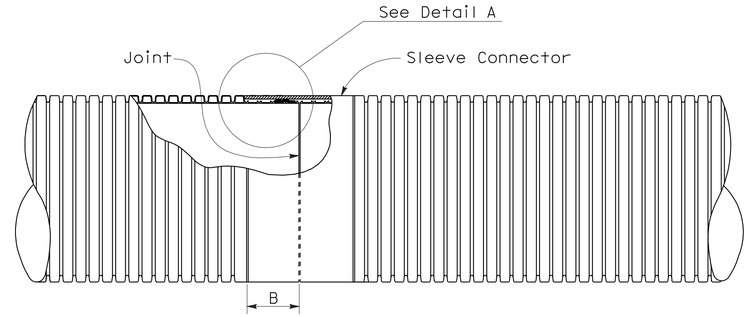

PLAN VIEW
Liner Insert
See Note 4

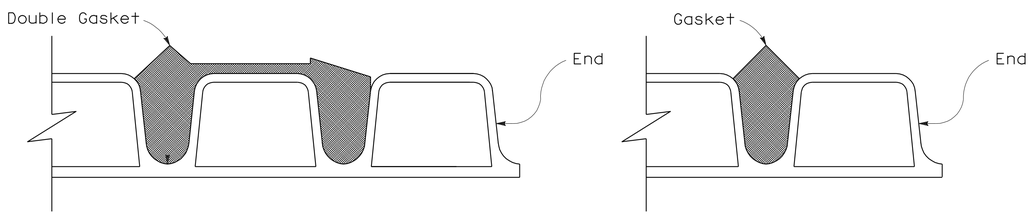

Double Gasket

Single Gasket

DETAIL B

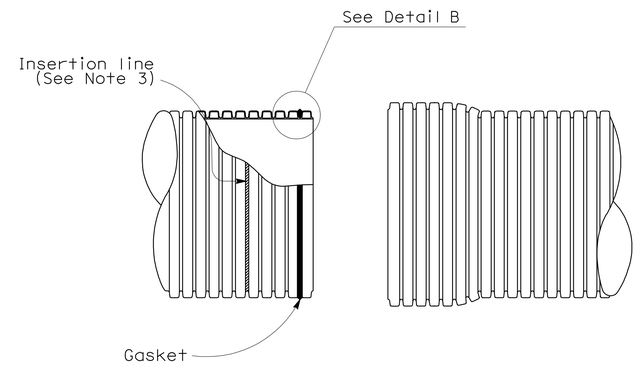

SPIGOT

BELL

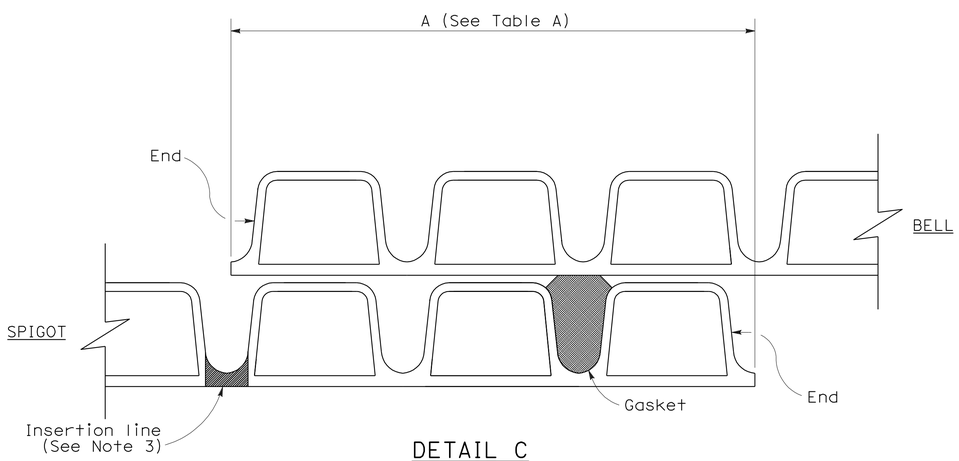

DETAIL C
(Single gasket shown)

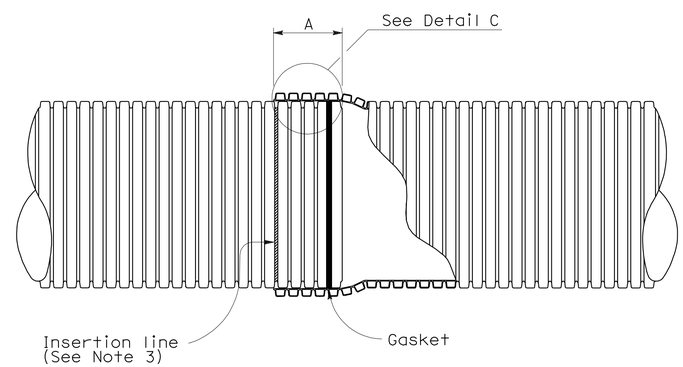

BELL AND SPIGOT JOINT

NOTES:

1. For pipe sections installed on straight alignment, the pipe sections shall be joined to achieve maxium joint overlap at all points on the periphery as indicated in Table A where the plans call for positive or watertight joints. Maxium joint overlap is recommended where the plans call for standard joints, but in no case shall the joint overlap be less than 3½".
2. For pipe sections installed on curved alignment, the maxium angle of deflection from straight alignment at any joint shall not exceed two degrees. Where the plans call for watertightness, field testing for compliance is required. Where plans call for positive joints, the pipe sections shall be joined to achieve Table A Dimensions on one side of the joint. Joints classified as standard shall have no less than 3½" joint overlap at any point on the periphery.
3. Factory applied insertion line limit shall be placed on spigot.
4. Liner insert to be used inside of existing pipe.

TABLE A

JOINT OVERLAP DIMENSIONS		
PIPE Dia (NOMINAL)	A	B
12"	5¾"	4¼"
15"	6¾"	5⅝"
18"	6¾"	5⅝"
21"	8½"	5⅝"
24"	8½"	6⅛"
30"	8½"	7⅛"
36"	8½"	8⅛"

STATE OF CALIFORNIA
DEPARTMENT OF TRANSPORTATION

CORRUGATED POLYVINYL CHLORIDE PIPE WITH SMOOTH INTERIOR STANDARD AND POSITIVE JOINTS

NO SCALE

NSP D97I DATED MARCH 7, 2008 SUPPLEMENTS THE STANDARD PLANS BOOK DATED MAY 2006.

NEW STANDARD PLAN NSP D97I

2006 NEW STANDARD PLAN NSP D97I

2-13-08

DIST	COUNTY	ROUTE	POST MILES TOTAL PROJECT	SHEET NO.	TOTAL SHEETS
11	SD	54,805	1.8,5.5/9.4	492	635

Raymond Don Tsztoo
REGISTERED CIVIL ENGINEER

June 6, 2008
PLANS APPROVAL DATE

REGISTERED PROFESSIONAL ENGINEER
Raymond Don Tsztoo
No. C37332
Exp. 6-30-08
CIVIL
STATE OF CALIFORNIA

The State of California or its officers or agents shall not be responsible for the accuracy or completeness of electronic copies of this plan sheet.

To accompany plans dated 12-5-11

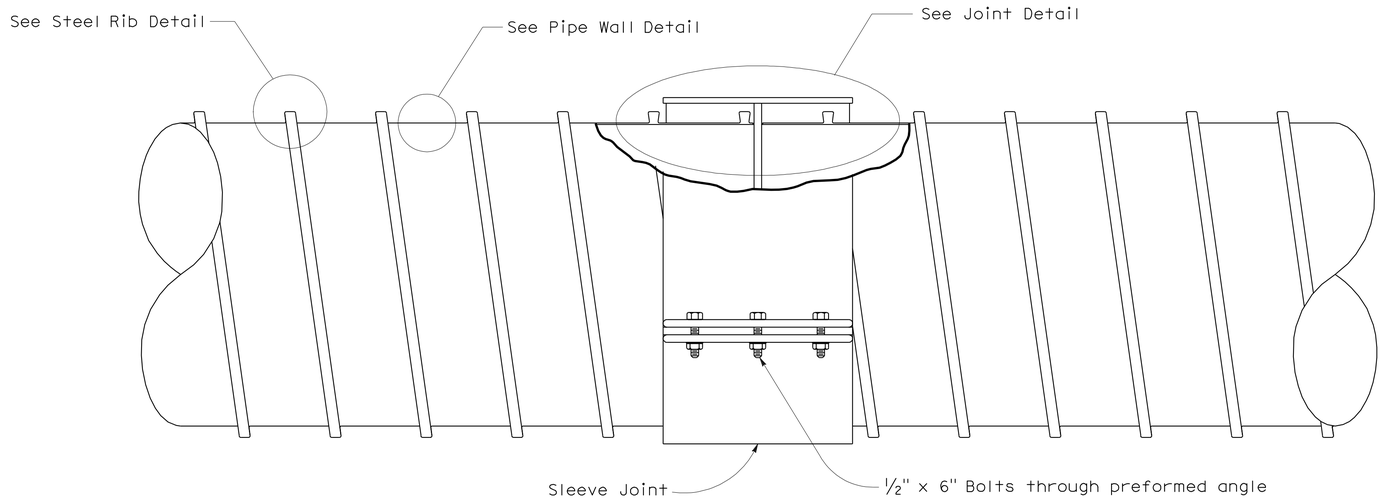

COMPOSITE STEEL SPIRAL RIB PIPE

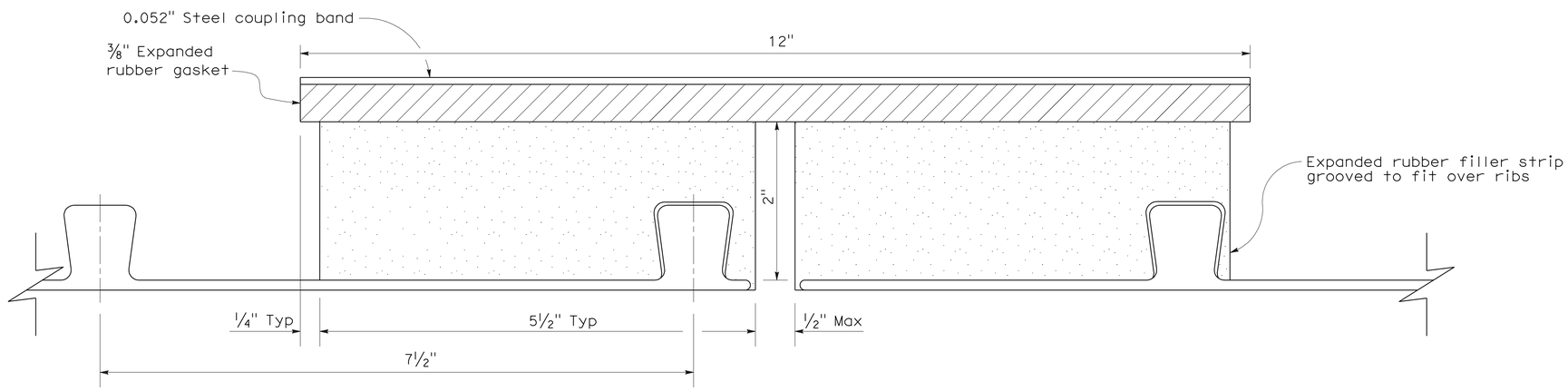

JOINT DETAIL

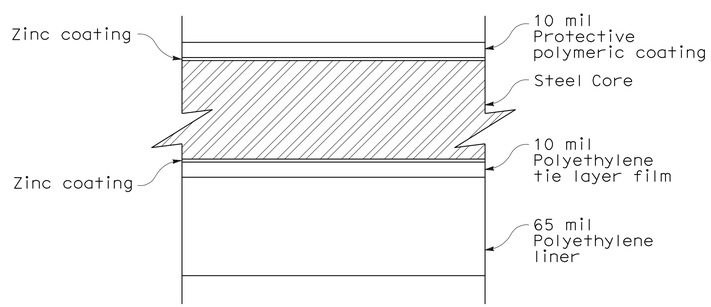

PIPE WALL DETAIL

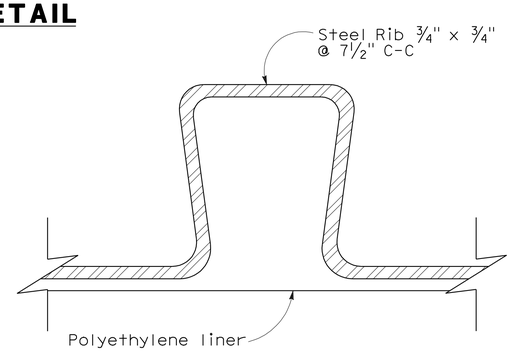

STEEL RIB DETAIL

NOTES:

1. Pipe to conform to ASTM A 978.
2. See Standard Plan A62F for backfill details.
3. Protective polymer film to conform to ASTM A 742 and AASHTO M 246.
4. See Standard Plan D97C for Universal Coupling details.
5. Strap joint connection shall consist of 2 separate bolted preformed connectors joined to form one strap when pipe inside diameter is greater than or equal to 60".

STATE OF CALIFORNIA
DEPARTMENT OF TRANSPORTATION

COMPOSITE STEEL SPIRAL RIB PIPE WITH SMOOTH INTERIOR STANDARD JOINT

NO SCALE

NSP D97J DATED JUNE 6, 2008 SUPPLEMENTS THE STANDARD PLANS BOOK DATED MAY 2006.

NEW STANDARD PLAN NSP D97J

2006 NEW STANDARD PLAN NSP D97J

4-24-08

DIST	COUNTY	ROUTE	POST MILES TOTAL PROJECT	SHEET NO.	TOTAL SHEETS
11	SD	54,805	1.8,5.5/9.4	493	635

LICENSED LANDSCAPE ARCHITECT

June 5, 2009
PLANS APPROVAL DATE

The State of California or its officers or agents shall not be responsible for the accuracy or completeness of electronic copies of this plan sheet.

LICENSED LANDSCAPE ARCHITECT — Gregory A. Balzer — 2576 — 10 January — 2-28-11 (Renewal Date) — 5-14-09 (Date) — STATE OF CALIFORNIA

To accompany plans dated 12-5-11

A

AB	aggregate base
ABS	acrylonitrile-butadiene-styrene
AC	asphalt concrete
Adj	adjacent/adjustable
AIC	auxiliary irrigation controller
Alt	alternative
AMEND	amendment
ARV	air release valve
AUTO	automatic
AUX	auxiliary
AVB	atmospheric vacuum breaker

B

B&B	balled and burlapped
B/B	brass/bronze
B/B/PL	brass/bronze/plastic
B/PL	brass/plastic
BFM	bonded fiber matrix
Bit Ctd	bituminous coated
BP	booster pump
BPA	backflow preventer assembly
BPAE	backflow preventer assembly in enclosure
BPE	backflow preventer enclosure
BV	ball valve

C

CAP	corrugated aluminum pipe
CARV	combination air release valve
CCA	cam coupler assembly
CEC	controller enclosure cabinet
CHDPE	corrugated high density polyethylene
CL	chain link
CNC	control and neutral conductors
Conc	concrete
Cond	conduit
CSP	corrugated steel pipe
CST	center strip
CV	check valve

D

Dia	diameter
DIP	ductile iron pipe
DN	diameter nominal

E

EA	each
Elect	electric/electrical
Elev	elevation
ENCL	enclosure
EP	edge of pavement
ES	edge of shoulder
EST	end strip
ESTB	establishment
ETW	edge of traveled way

F

F	full circle
F/P	full/part circle
FAU	filter assembly unit
FCV	flow control valve
FERT	fertilizer
FG	finished grade
FIPT	female iron pipe thread
FIS	fertilizer injector system
FL	flow line
FM	flow monitor
FS	flow sensor
Ft	foot/feet
FV	flush valve

G

GAL	Gallon(s)
Galv	galvanized
GARV	garden valve
GPH	gallons per hour
GPM	gallons per minute
GSP	galvanized steel pipe
GV	gate valve

H

H	half circle
HB	hose bib
HDPE	high density polyethylene
HP	horsepower/hinge point
HPL	high pressure line
Hwy	highway

I

IC	irrigation controller
ICC	irrigation controller(s) in controller enclosure cabinet
ID	inside diameter
In	inches
IFS	irrigation filtration system
IPS	iron pipe size
IPT	iron pipe thread
Irr	irrigation

L

L	length
LF	linear foot

M

Max	maximum
MBGR	metal beam guard railing
MCV	manual control valve
MIC	master irrigation controller
Min	minimum
MIPT	male iron pipe thread
Misc	miscellaneous
Mtl	material
MVP	maintenance vehicle pullout

N

NCN	no common name
NL	nozzle line
No.	number
NPT	national pipe thread

O

O/C	on center
OD	outside diameter
Oz	ounce

P

P	part circle
PB	pull box
PCC	portland cement concrete
PE	polyethylene
Pkt	packet
PL	plastic
PLT	plant/planting
PLT ESTB	plant establishment
PM	post mile
PR	pressure rated
PRLV	pressure relief valve
PSFM	polymer stabilized fiber matrix
PSI	pounds per square inch
PRV	pressure reducing valve
PVC	polyvinyl chloride
Pvmt	pavement

Q

Q	quarter circle
QCV	quick coupling valve

R

R	radius
RCP	reinforced concrete pipe
RCV	remote control valve
RCVM	remote control valve (master)
RCVMF	remote control valve (master) w/ flow meter
RCW	recycled/reclaimed water
RECP	rolled erosion control product
REQ	required
R/W	right of way

S

S	slip
SCC	sprinkler control conduit
SCH	schedule
SF	state-furnished
Shld	shoulder
SQFT	square foot/feet
SQYD	square yard(s)
SST	side strip
Sta	station
Std	standard
SW	sidewalk/sound wall

T

T	third circle/thread
TLS	truck loading standpipe
TQ	three quarter circle
TRM	turf reinforcement mat
TRVD	traveled
TT	two third circle
Typ	typical

U

UG	underground

V

VAU	valve assembly unit

W

W	width
W/	with
WM	water meter
WS	wye strainer
WSP	welded steel pipe
WWM	welded wire mesh

NOTE:

FOR ADDITIONAL ABBREVIATIONS, SEE STANDARD PLANS A10A AND A10B.

STATE OF CALIFORNIA
DEPARTMENT OF TRANSPORTATION

PLANTING AND IRRIGATION ABBREVIATIONS

NO SCALE

RSP H1 DATED JUNE 5, 2009 SUPERSEDES STANDARD PLAN H1 DATED MAY 1, 2006 - PAGE 201 OF THE STANDARD PLANS BOOK DATED MAY 2006.

REVISED STANDARD PLAN RSP H1

2006 REVISED STANDARD PLAN RSP H1

DIST	COUNTY	ROUTE	POST MILES TOTAL PROJECT	SHEET NO.	TOTAL SHEETS
11	SD	54,805	1.8,5.5/9.4	494	635

LICENSED LANDSCAPE ARCHITECT

June 5, 2009
PLANS APPROVAL DATE

The State of California or its officers or agents shall not be responsible for the accuracy or completeness of electronic copies of this plan sheet.

LICENSED LANDSCAPE ARCHITECT — Gregory A. Balzer — 2576 — 10 January 2-28-11 Renewal Date — 5-14-09 Date — STATE OF CALIFORNIA

To accompany plans dated 12-5-11

EXISTING	PROPOSED	ITEM DESCRIPTION
		WATER METER (WM)
		BACKFLOW PREVENTER ASSEMBLY (BPA)
		BACKFLOW PREVENTER ASSEMBLY IN ENCLOSURE (BPAE)
		BACKFLOW PREVENTER ENCLOSURE (BPE)
		BOOSTER PUMP (BP)
		TRUCK LOADING STANDPIPE (TLS)
FS	FS	FLOW SENSOR (FS)
X	X	MASTER IRRIGATION CONTROLLER (MIC)
		AUXILIARY IRRIGATION CONTROLLER (AIC)
		IRRIGATION CONTROLLER (IC)/ IRRIGATION CONTROLLER (IC) (BATTERY) IRRIGATION CONTROLLER (IC) (SOLAR)
		IRRIGATION CONTROLLER(S) IN CONTROLLER ENCLOSURE CABINET (ICC)
		CONTROL AND NEUTRAL CONDUCTORS (CNC)
SCC	SCC	SPRINKLER CONTROL CONDUIT (SCC)
		IRRIGATION CROSSOVER
		EXTEND IRRIGATION CROSSOVER
		IRRIGATION SLEEVE
dip	DIP	DUCTILE IRON PIPE (SUPPLY LINE) (MAIN) (DIP)
		GALVANIZED STEEL PIPE (SUPPLY LINE) (MAIN) (GSP)
		GALVANIZED STEEL PIPE (SUPPLY LINE) (LATERAL) (GSP)
		PLASTIC PIPE (PR 200) (SUPPLY LINE) (MAIN)
		PLASTIC PIPE (PR 200) (SUPPLY LINE) (LATERAL)
		PLASTIC PIPE (IRRIGATION LINE)
		REMOTE CONTROL VALVE (RCV) REMOTE CONTROL VALVE (MASTER) (RCVM) REMOTE CONTROL VALVE (MASTER) W/FLOW METER (RCVMF)
		MANUAL CONTROL VALVE (MCV)
		VALVE ASSEMBLY UNIT (VAU)
		WYE STRAINER (WS)
		FILTER ASSEMBLY UNIT (FAU)
		GATE VALVE (GV)
		BALL VALVE (BV)

EXISTING	PROPOSED	ITEM DESCRIPTION
		QUICK COUPLING VALVE (QCV)
		CAM COUPLER ASSEMBLY (CCA)
		PRESSURE REDUCING VALVE (PRV)
		PRESSURE RELIEF VALVE (PRLV)
		FLOW CONTROL VALVE (FCV)
		COMBINATION AIR RELEASE VALVE (CARV)
		CHECK VALVE (CV)
		FLUSH VALVE (FV)
		NOZZLE LINE W/TURNING UNION
		IRRIGATION SYSTEM
		IRRIGATION SYSTEM TO BE REMOVED
		CHAIN LINK GATE
		QUICK COUPLING VALVE W/SPRINKLER PROTECTOR
3	3	SPRINKLER W/SPRINKLER PROTECTOR
	C	CONNECT TO EXISTING SYSTEM
		CAP
		CAP EXISTING

VALVE CODE

RCV SIZE
IRRIGATION CONTROLLER
CONTROLLER STATION
VALVE IN PARALLEL (IF APPLICABLE)
GPM
QUANTITY OF SPRINKLERS (WHEN SHOWN)

* 2½"-A-2b-40 -60

MCV SIZE
VALVE NUMBER
GPM
QUANTITY OF TYPE SPRINKLERS (WHEN SHOWN)

* 2"-3-30 -50

* VALVE CODES FOR EXISTING VALVES ARE SHOWN IN A DASHED ENCLOSURE.

STATE OF CALIFORNIA
DEPARTMENT OF TRANSPORTATION

PLANTING AND IRRIGATION SYMBOLS

NO SCALE

RSP H2 DATED JUNE 5, 2009 SUPERSEDES RSP H2 DATED MARCH 7, 2008 AND STANDARD PLAN H2 DATED MAY 1, 2006 - PAGE 202 OF THE STANDARD PLANS BOOK DATED MAY 2006.

REVISED STANDARD PLAN RSP H2

2006 REVISED STANDARD PLAN RSP H2

5-11-09

DIST	COUNTY	ROUTE	POST MILES TOTAL PROJECT	SHEET NO.	TOTAL SHEETS
11	SD	54,805	1.8,5.5/9.4	495	635

LICENSED LANDSCAPE ARCHITECT

June 5, 2009
PLANS APPROVAL DATE

The State of California or its officers or agents shall not be responsible for the accuracy or completeness of electronic copies of this plan sheet.

LICENSED LANDSCAPE ARCHITECT
Gregory A. Balzer 2516
10-28-11
Renewal Date
5-14-09
Date
STATE OF CALIFORNIA

To accompany plans dated 12-5-11

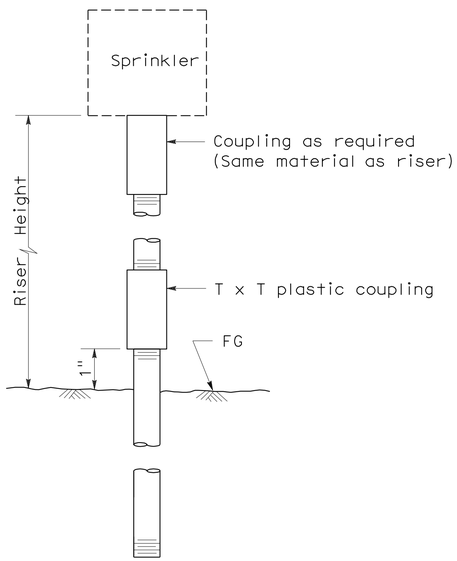

ELEVATION
RISER TYPE I

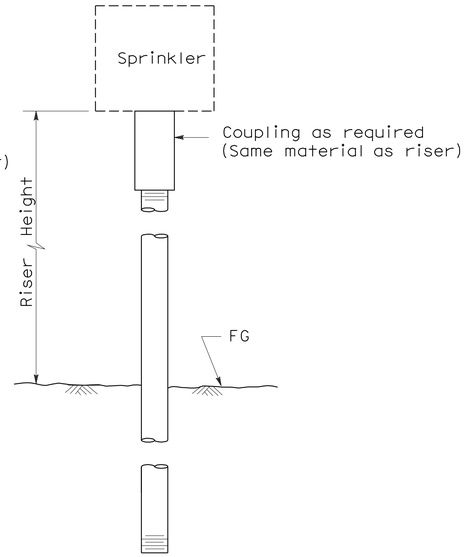

ELEVATION
RISER TYPE II

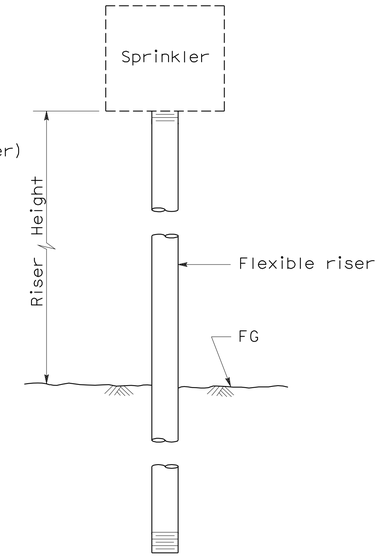

ELEVATION
RISER TYPE III

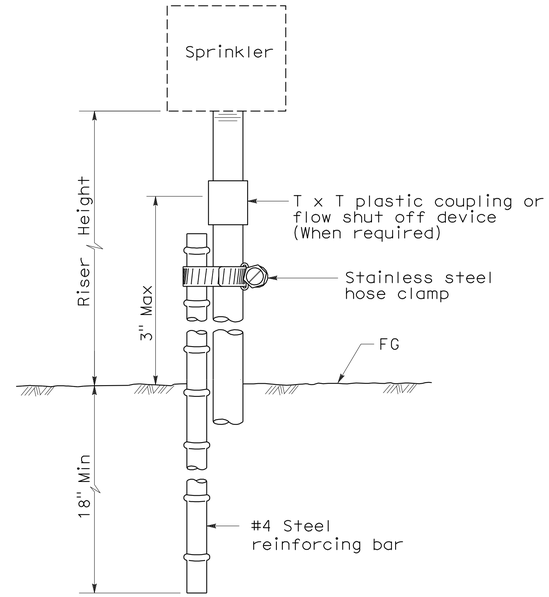

ELEVATION
RISER TYPE IV

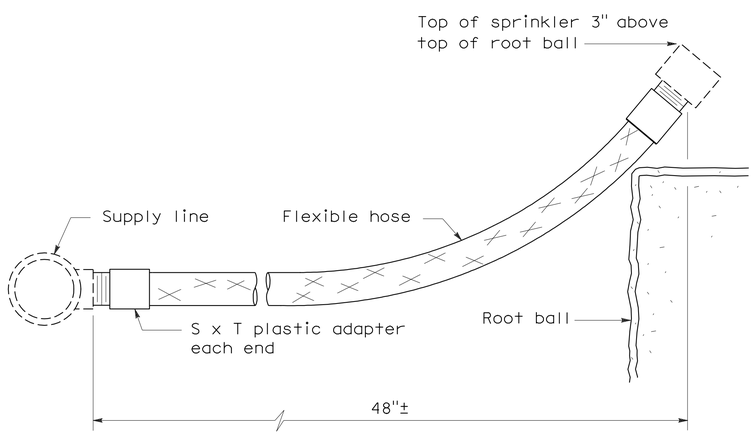

ELEVATION
RISER TYPE V

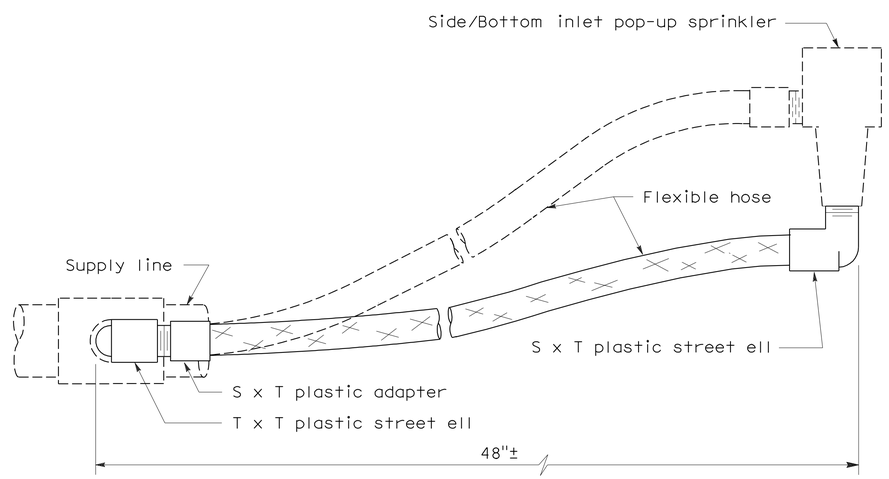

ELEVATION
RISER TYPE VI

STATE OF CALIFORNIA
DEPARTMENT OF TRANSPORTATION

PLANTING AND IRRIGATION DETAILS

NO SCALE

RSP H5 DATED JUNE 5, 2009 SUPERSEDES STANDARD PLAN H5
DATED MAY 1, 2006 - PAGE 205 OF THE STANDARD PLANS BOOK DATED MAY 2006.

REVISED STANDARD PLAN RSP H5

2006 REVISED STANDARD PLAN RSP H5

5-28-09

DIST	COUNTY	ROUTE	POST MILES TOTAL PROJECT	SHEET NO.	TOTAL SHEETS
11	SD	54,805	1.8,5.5/9.4	496	635

LICENSED LANDSCAPE ARCHITECT

June 5, 2009
PLANS APPROVAL DATE

Gregory A. Balzer 2576 10 January 2-28-11 (Renewal) Date 5-14-09 Date LICENSED LANDSCAPE ARCHITECT STATE OF CALIFORNIA

The State of California or its officers or agents shall not be responsible for the accuracy or completeness of electronic copies of this plan sheet.

To accompany plans dated 12-5-11

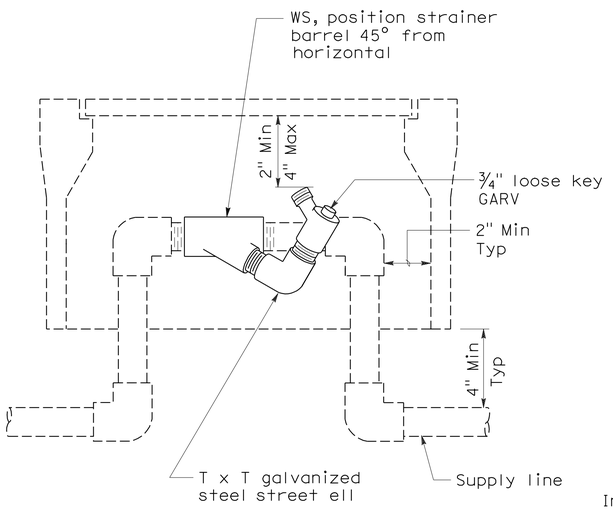

ELEVATION
WYE STRAINER

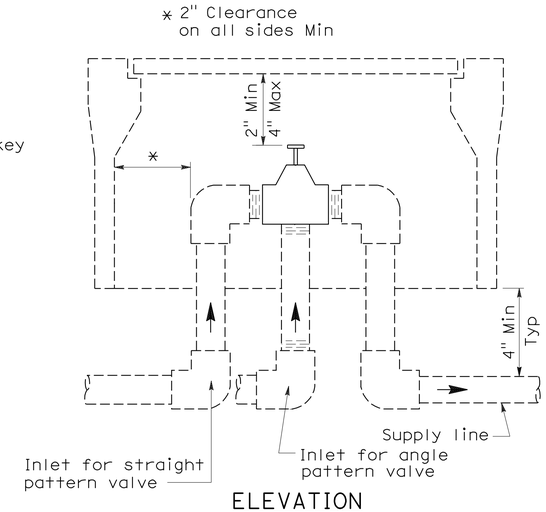

ELEVATION
VALVE

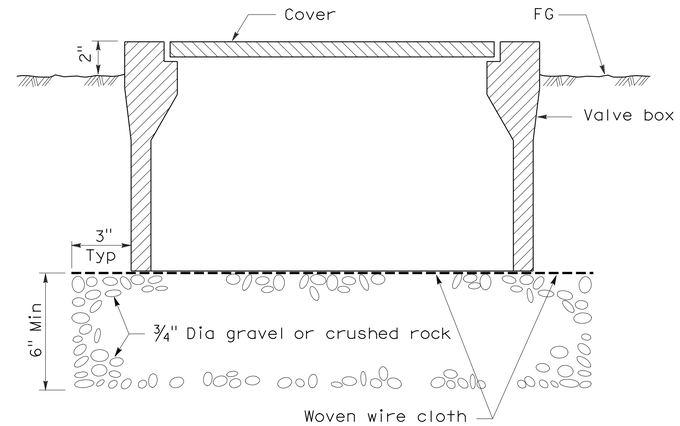

SECTION
VALVE BOX

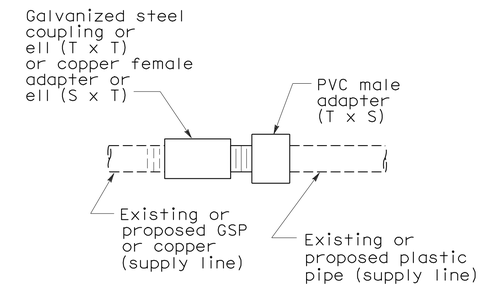

PLAN
GALVANIZED OR COPPER PIPE CONNECTION TO PLASTIC PIPE

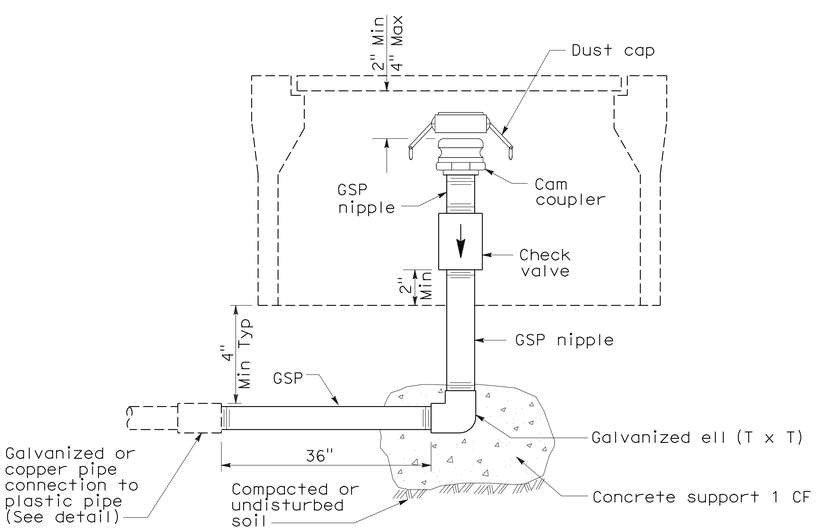

ELEVATION
CAM COUPLER ASSEMBLY

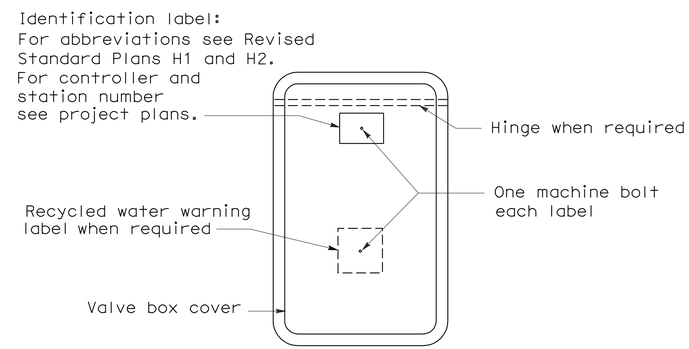

PLAN

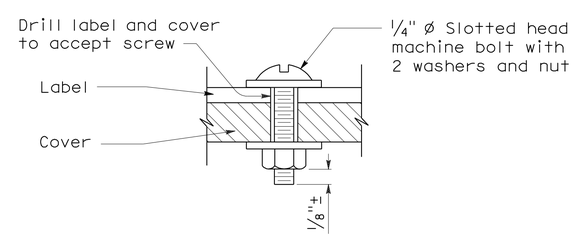

SECTION
VALVE BOX IDENTIFICATION

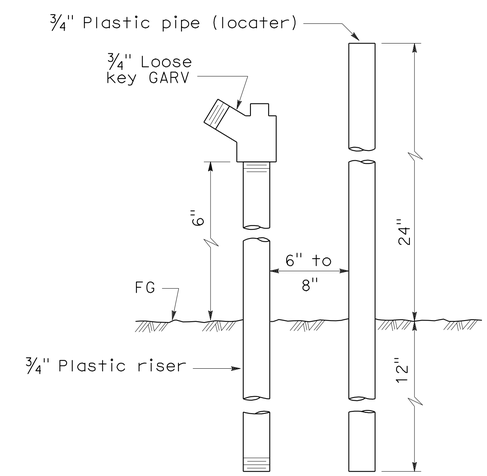

ELEVATION
FLUSH VALVE

STATE OF CALIFORNIA
DEPARTMENT OF TRANSPORTATION

PLANTING AND IRRIGATION DETAILS

NO SCALE

RSP H7 DATED JUNE 5, 2009 SUPERSEDES STANDARD PLAN H7
DATED MAY 1, 2006 - PAGE 207 OF THE STANDARD PLANS BOOK DATED MAY 2006.

REVISED STANDARD PLAN RSP H7

2006 REVISED STANDARD PLAN RSP H7

5-28-09

DIST	COUNTY	ROUTE	POST MILES TOTAL PROJECT	SHEET NO.	TOTAL SHEETS
11	SD	54,805	1.8,5.5/9.4	497	635

LICENSED LANDSCAPE ARCHITECT

April 3, 2009
PLANS APPROVAL DATE

The State of California or its officers or agents shall not be responsible for the accuracy or completeness of electronic copies of this plan sheet.

LICENSED LANDSCAPE ARCHITECT
Gregory A. Balzer
Gregory A. Balzer
Licensed Landscape Architect
02-28-11
Renewal Date
03-04-09
Date
STATE OF CALIFORNIA

To accompany plans dated 12-5-11

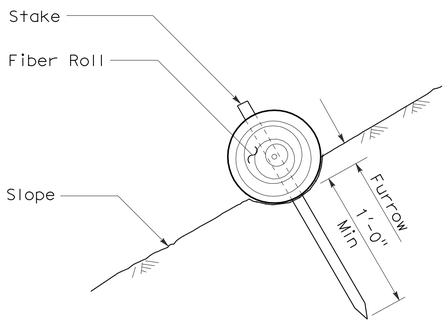

SECTION

FIBER ROLL (TYPE 1)

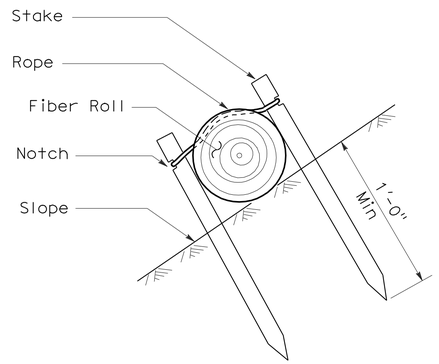

SECTION

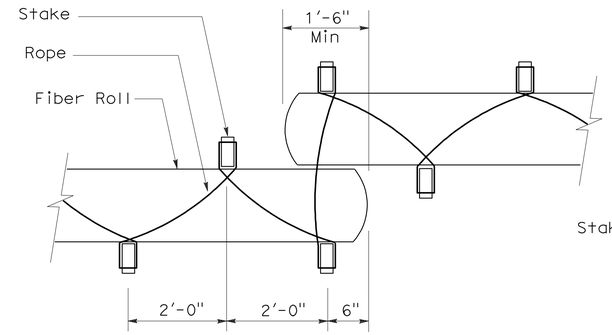

PLAN

FIBER ROLL (TYPE 2)

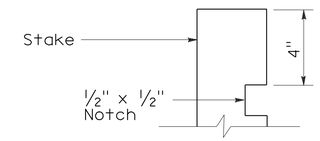

ELEVATION

STAKE NOTCH DETAIL

NOTES:

1. Fiber roll spacing varies depending upon slope inclination.
2. Installations shown in the perspectives are for slope inclination of 10:1 and steeper.

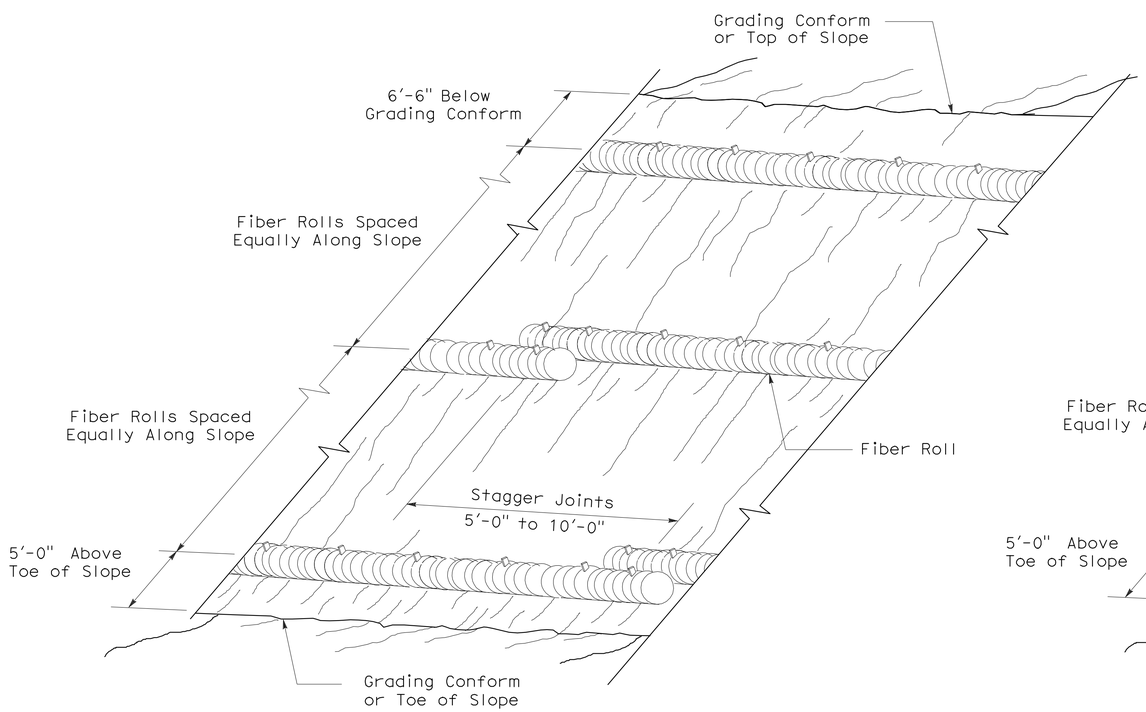

PERSPECTIVE

FIBER ROLL (TYPE 1)

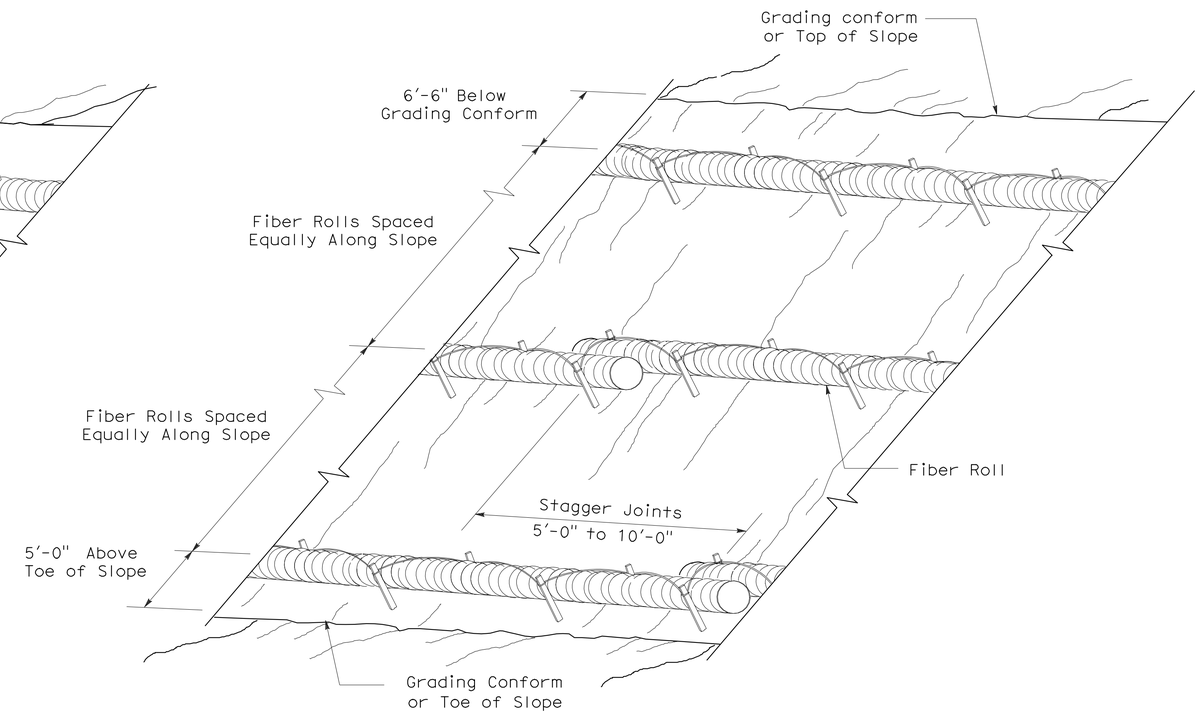

PERSPECTIVE

FIBER ROLL (TYPE 2)

STATE OF CALIFORNIA
DEPARTMENT OF TRANSPORTATION

EROSION CONTROL DETAILS (FIBER ROLL)

NO SCALE

RNSP H51 DATED APRIL 3, 2009 SUPERSEDES NSP H51 DATED DECEMBER 1, 2006 THAT SUPPLEMENTS THE STANDARD PLANS BOOK DATED MAY 2006.

REVISED NEW STANDARD PLAN RNSP H51

2006 REVISED NEW STANDARD PLAN RNSP H51

DIST	COUNTY	ROUTE	POST MILES TOTAL PROJECT	SHEET NO.	TOTAL SHEETS
11	SD	54,805	1.8,5.5/9.4	498	635

Randell D. Hiatt
REGISTERED CIVIL ENGINEER

June 6, 2008
PLANS APPROVAL DATE

REGISTERED PROFESSIONAL ENGINEER
Randell D. Hiatt
No. C50200
Exp. 6-30-09
CIVIL
STATE OF CALIFORNIA

The State of California or its officers or agents shall not be responsible for the accuracy or completeness of electronic copies of this plan sheet.

To accompany plans dated 12-5-11

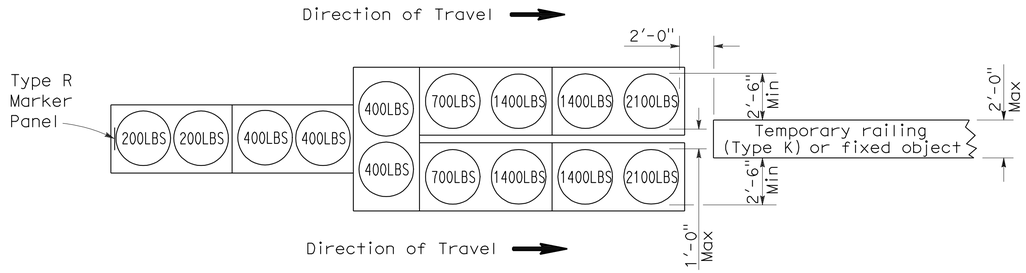

ARRAY 'TU14'

Approach speed 45 mph or more

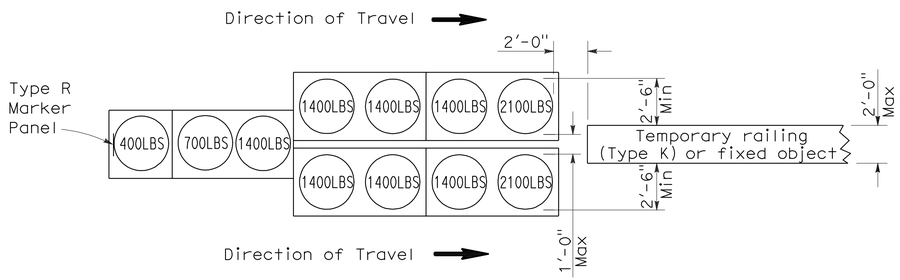

ARRAY 'TU11'

Approach speed less than 45 mph

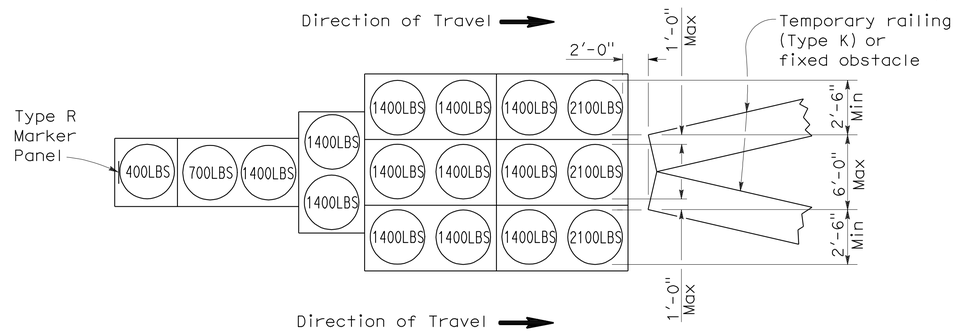

ARRAY 'TU17'

Approach speed less than 45 mph

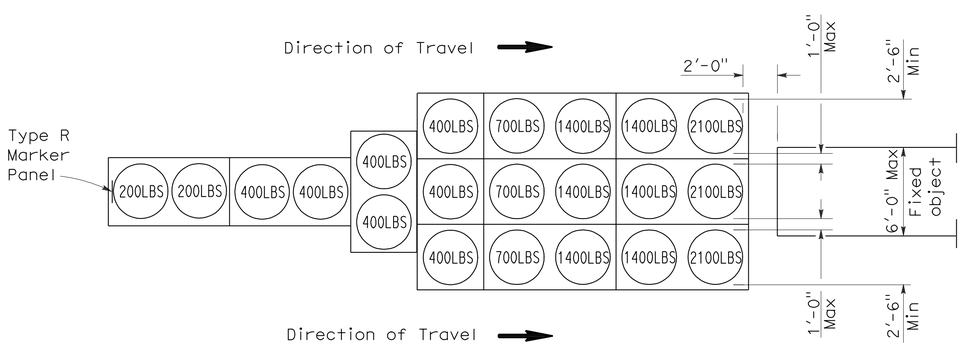

ARRAY 'TU21'

Approach speed 45 mph or more

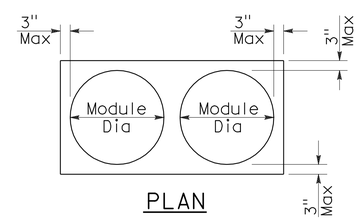

PLAN

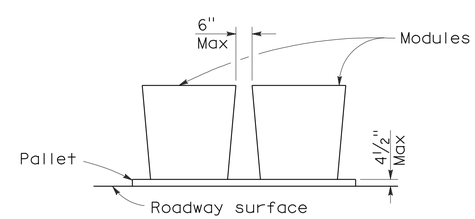

ELEVATION

CRASH CUSHION PALLET DETAIL

See Note 7

NOTES:

1. (XXX) Indicates sand filled module location and weight of sand in pounds for each module. Module spacing is based on the greater diameter of the module.
2. All sand weights are nominal.
3. Temporary crash cushion arrays shall not encroach on the traveled way.
4. Place the top of Type R marker panel 1" below the module lid.
5. Refer to Standard Plan A73B for marker details.
6. Approach speeds indicated conform to NCHRP 350 Report criteria.
7. Use of pallets is optional.

STATE OF CALIFORNIA
DEPARTMENT OF TRANSPORTATION

TEMPORARY CRASH CUSHION, SAND FILLED (UNIDIRECTIONAL)

NO SCALE

RSP T1A DATED JUNE 6, 2008 SUPERSEDES STANDARD PLAN T1A
DATED MAY 1, 2006 - PAGE 211 OF THE STANDARD PLANS BOOK DATED MAY 2006.

REVISED STANDARD PLAN RSP T1A

2006 REVISED STANDARD PLAN RSP T1A

DIST	COUNTY	ROUTE	POST MILES TOTAL PROJECT	SHEET NO.	TOTAL SHEETS
11	SD	54,805	1.8,5.5/9.4	499	635

Randell D. Hiatt
REGISTERED CIVIL ENGINEER

June 6, 2008
PLANS APPROVAL DATE

REGISTERED PROFESSIONAL ENGINEER
Randell D. Hiatt
No. C50200
Exp. 6-30-09
CIVIL
STATE OF CALIFORNIA

The State of California or its officers or agents shall not be responsible for the accuracy or completeness of electronic copies of this plan sheet.

To accompany plans dated 12-5-11

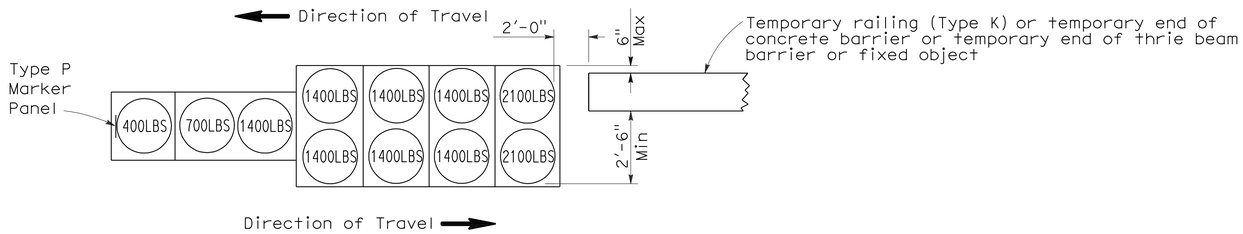

ARRAY 'TB11'

Approach speed less than 45 mph

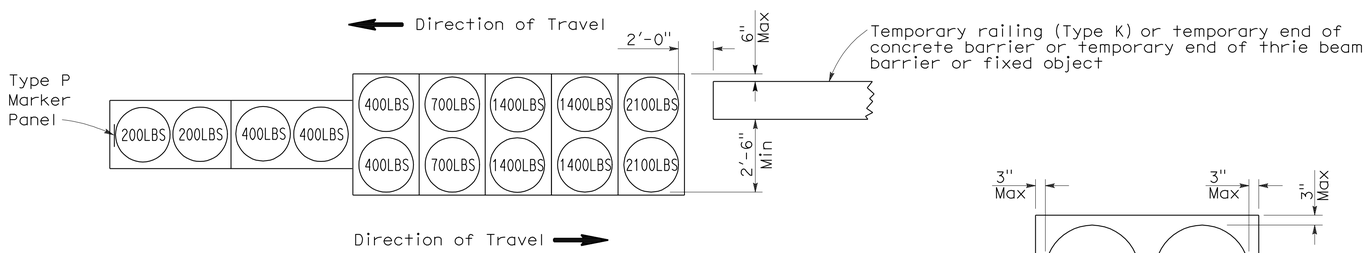

ARRAY 'TB14'

Approach speed 45 mph or more

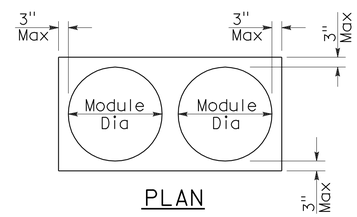

PLAN

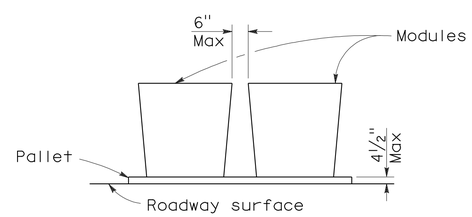

ELEVATION

CRASH CUSHION PALLET DETAIL

See Note 7

NOTES:

1. (XXX) Indicates sand filled module location and weight of sand in pounds for each module. Module spacing is based on the greater diameter of the module.
2. All sand weights are nominal.
3. Temporary crash cushion arrays shall not encroach on the traveled way.
4. Place the Type P marker panel so that the bottom of the panel rests upon the pallet.
5. Refer to Standard Plan A73B for marker details.
6. Approach speeds indicated conform to NCHRP 350 Report criteria.
7. Use of pallets is optional.

STATE OF CALIFORNIA
DEPARTMENT OF TRANSPORTATION

TEMPORARY CRASH CUSHION, SAND FILLED (BIDIRECTIONAL)

NO SCALE

RSP T1B DATED JUNE 6, 2008 SUPERSEDES STANDARD PLAN T1B
DATED MAY 1, 2006 - PAGE 212 OF THE STANDARD PLANS BOOK DATED MAY 2006.

REVISED STANDARD PLAN RSP T1B

2006 REVISED STANDARD PLAN RSP T1B

5-15-08

DIST	COUNTY	ROUTE	POST MILES TOTAL PROJECT	SHEET NO.	TOTAL SHEETS
11	SD	54,805	1.8,5.5/9.4	500	635

Randell D. Hiatt
REGISTERED CIVIL ENGINEER

June 6, 2008
PLANS APPROVAL DATE

REGISTERED PROFESSIONAL ENGINEER
Randell D. Hiatt
No. C50200
Exp. 6-30-09
CIVIL
STATE OF CALIFORNIA

The State of California or its officers or agents shall not be responsible for the accuracy or completeness of electronic copies of this plan sheet.

To accompany plans dated 12-5-11

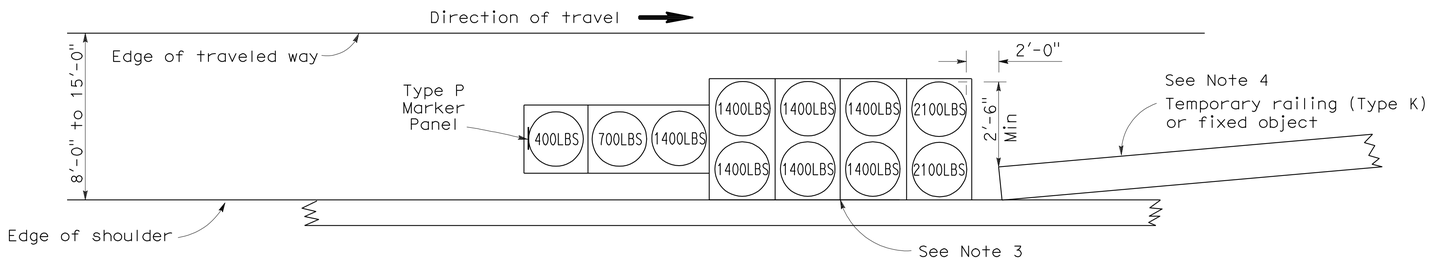

ARRAY 'TS11'

Approach speed less than 45 mph
See Note 9

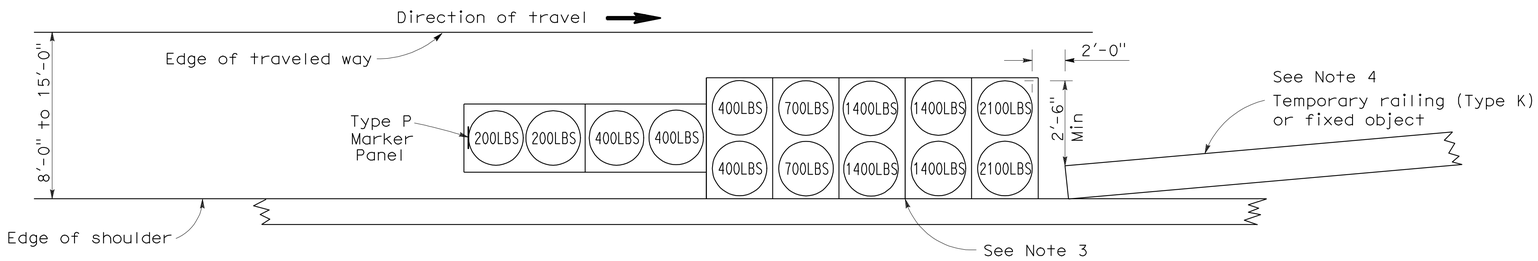

ARRAY 'TS14'

Approach speed 45 mph or more
See Note 9

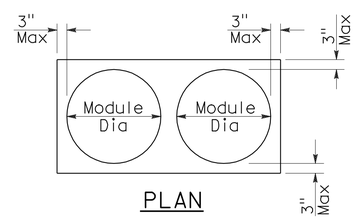

PLAN

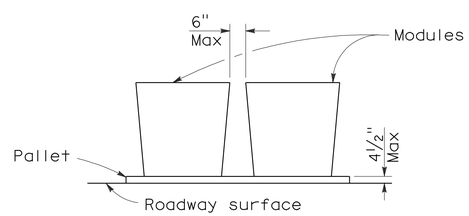

ELEVATION

CRASH CUSHION PALLET DETAIL

See Note 11

NOTES:

1. (XXX) Indicates sand filled module location and weight of sand in pounds for each module. Module spacing is based on the greater diameter of the module.
2. All sand weights are nominal.
3. The temporary crash cushion arrays shown on this plan shall be used only in locations where there will be traffic on one side of the temporary crash cushion array.
4. If the fixed object or approach end of the temporary railing is less than 15'-0" from the edge of traveled way, a temporary crash cushion is required in a construction or work zone.
5. Temporary crash cushion arrays shall not encroach on the traveled way.
6. Arrays for median shoulders shall conform to details shown on this plan for outside shoulders.
7. Place the Type P marker panel so that the bottom of the panel rests upon the pallet and faces traffic.
8. Refer to Standard Plan A73B for marker details.
9. For shoulder widths less than 8'-0", appropriate approved crash cushion protection, other than sand filled modules, shall be provided at fixed objects and at approach ends of temporary railing. The specific type of crash cushion shall be as shown on the project plans or as specified in the Special Provisions, or if not shown on the project plans or specified in the Special Provisions, shall be as approved by the Engineer.
10. Approach speeds indicated conform to NCHRP 350 Report criteria.
11. Use of pallets is optional.

STATE OF CALIFORNIA
DEPARTMENT OF TRANSPORTATION

TEMPORARY CRASH CUSHION, SAND FILLED (SHOULDER INSTALLATIONS)

NO SCALE

RSP T2 DATED JUNE 6, 2008 SUPERSEDES STANDARD PLAN T2
DATED MAY 1, 2006 - PAGE 213 OF THE STANDARD PLANS BOOK DATED MAY 2006.

REVISED STANDARD PLAN RSP T2

2006 REVISED STANDARD PLAN RSP T2

5-15-08