Dist	COUNTY	ROUTE	POST MILES TOTAL PROJECT	SHEET No.	TOTAL SHEETS
11	SD	54,805	1.8,5.5/9.4	501	635

Randell D. Hiatt
REGISTERED CIVIL ENGINEER

May 20, 2011
PLANS APPROVAL DATE

REGISTERED PROFESSIONAL ENGINEER
Randell D. Hiatt
No. C50200
Exp. 6-30-11
CIVIL
STATE OF CALIFORNIA

The State of California or its officers or agents shall not be responsible for the accuracy or completeness of electronic copies of this plan sheet.

To accompany plans dated 12-5-11

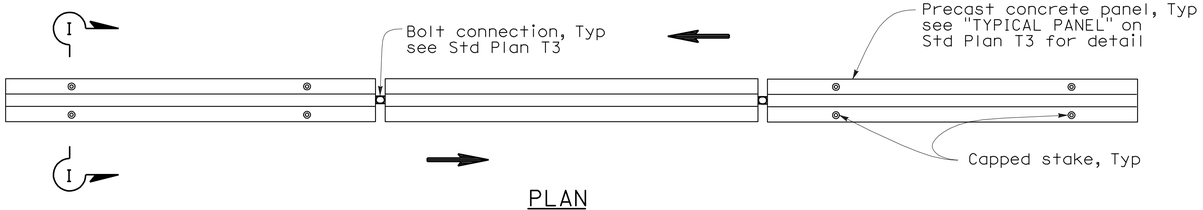

PLAN

RAILING STAKING CONFIGURATION FOR TWO-WAY TRAFFIC

See Note 1

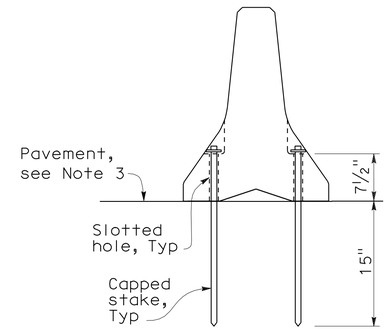

SECTION I-I

NOTES:

1. Where Type K Temporary Railing is placed as a temporary or long term barrier in two-way traffic on highways with less than 24" from the edge of traveled way, use four capped stakes per every other panel with end panels staked.
2. Where Type K Temporary Railing is placed 3" to 24" from the edge of an excavation on highways, use two capped stakes per panel along the traffic side.
3. Staked Type K Temporary Railing must be supported by at least 4" thick concrete, hot mix asphalt or existing asphalt concrete pavement.
4. The minimum yield strength for the washer must be 60,000 psi.
5. Direction of adjacent traffic indicated by ⟹.

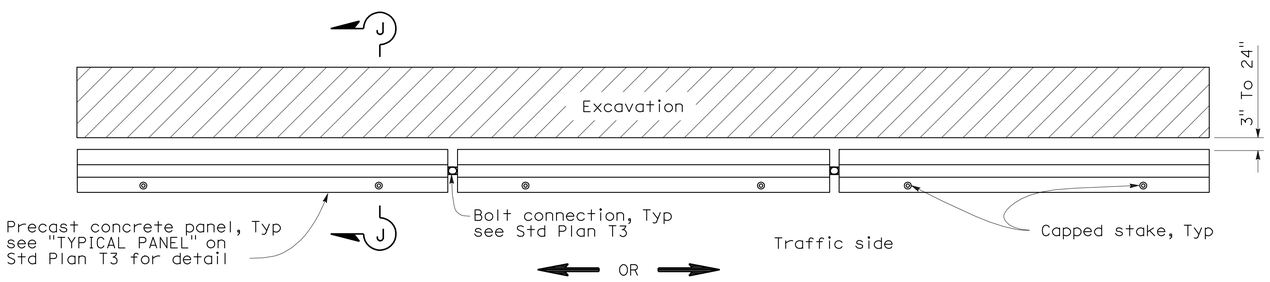

PLAN

RAILING STAKING CONFIGURATION ADJACENT TO AN EXCAVATION

See Note 2

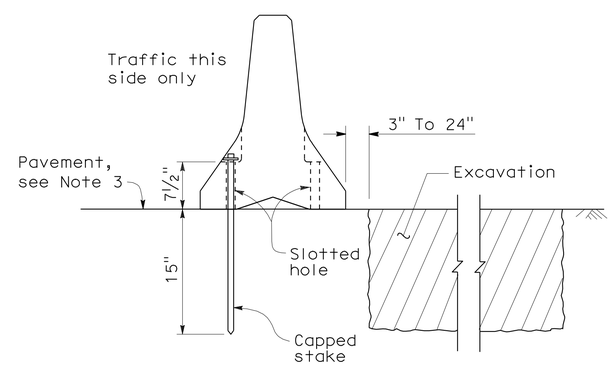

SECTION J-J

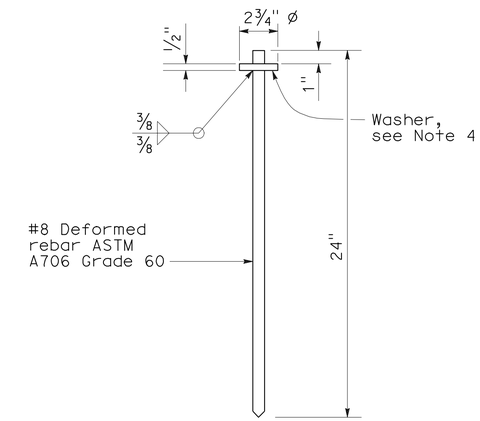

CAPPED STAKE DETAIL

STATE OF CALIFORNIA
DEPARTMENT OF TRANSPORTATION

TEMPORARY RAILING (TYPE K)

NO SCALE

NSP T3A DATED MAY 20, 2011 SUPPLEMENTS
THE STANDARD PLANS BOOK DATED MAY 2006.

NEW STANDARD PLAN NSP T3A

2006 NEW STANDARD PLAN NSP T3A

DIST	COUNTY	ROUTE	POST MILES TOTAL PROJECT	SHEET NO.	TOTAL SHEETS
11	SD	54,805	1.8,5.5/9.4	502	635

REGISTERED CIVIL ENGINEER

November 17, 2006
PLANS APPROVAL DATE

REGISTERED PROFESSIONAL ENGINEER — Greg W. Edwards — No. C36386 — Exp. 6-30-08 — CIVIL — STATE OF CALIFORNIA

The State of California or its officers or agents shall not be responsible for the accuracy or completeness of electronic copies of this plan sheet.

To accompany plans dated 12-5-11

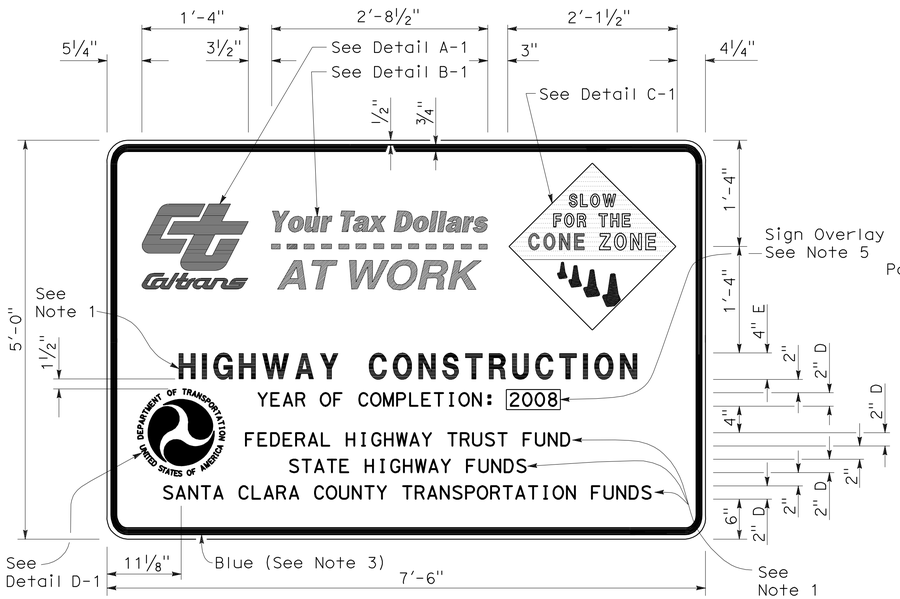

TYPE 1

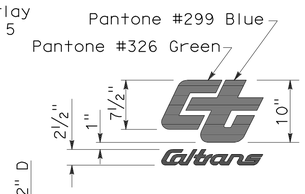

DETAIL A-1

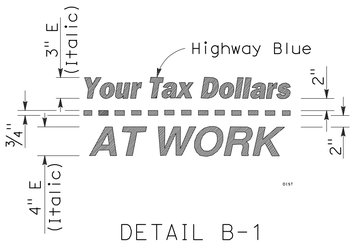

DETAIL B-1
(See Note 3)

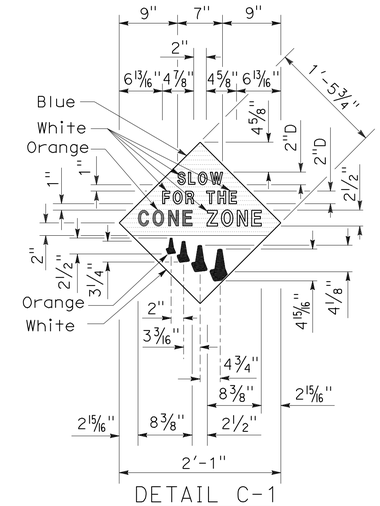

DETAIL C-1
(See Note 4)

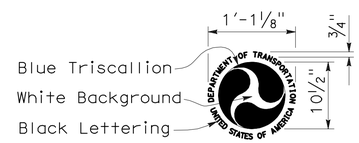

DETAIL D-1
(See Note 6)

NOTES:

1. The sign messages shown for type of project and fund types are examples only. See the Special Provisions for the applicable type of project and fund type messages to be used.
2. Except as otherwise shown, the legend of sign shall be black on a white background (non-reflective).
3. The border of the signs and details "B-1" and "B-2" shall be blue (non-reflective).
4. The diamond in details "C-1" and "C-2" shall be blue for the background of message, " SLOW FOR THE CONE ZONE", and white background for the orange cones. The color and type of font for the "SLOW FOR THE CONE ZONE" message shall be: "SLOW" white D; "FOR THE" white D; "CONE" orange Arial font; "ZONE" white Arial font.
5. Year of completion of project construction shown on the overlay is an example only. See the Special Provisions.
6. Use when the Project involves Federal Highway Trust Fund.

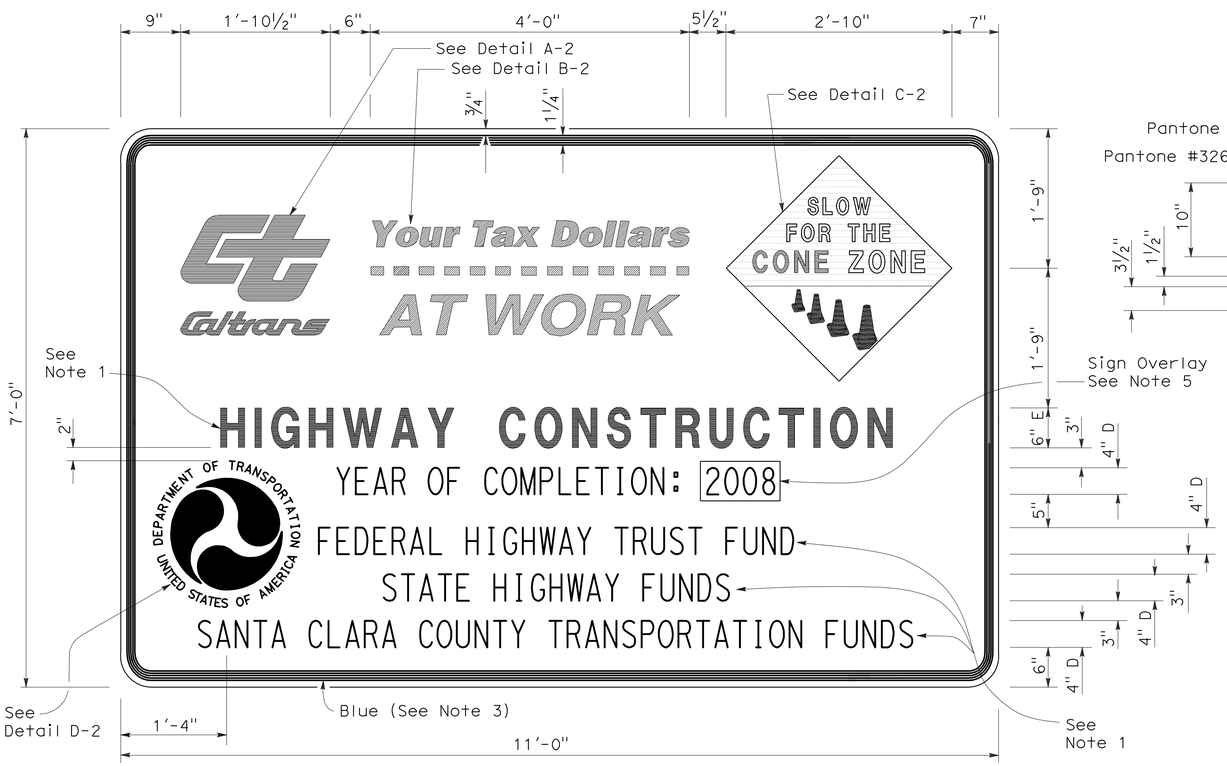

TYPE 2

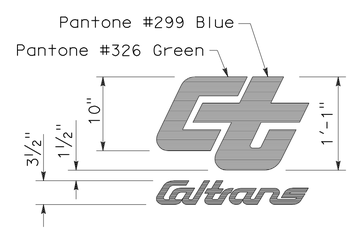

DETAIL A-2

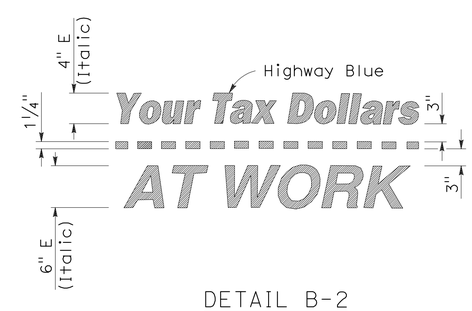

DETAIL B-2
(See Note 3)

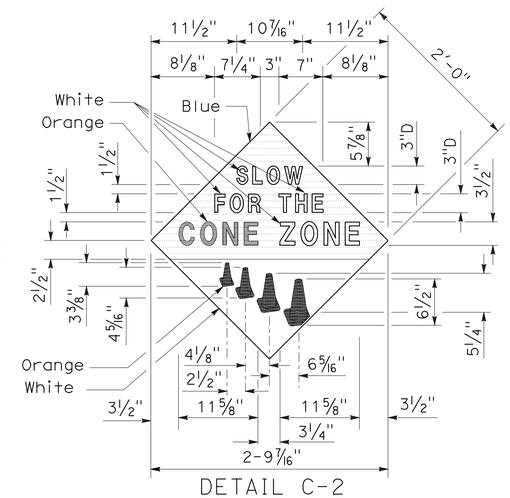

DETAIL C-2
(See Note 4)

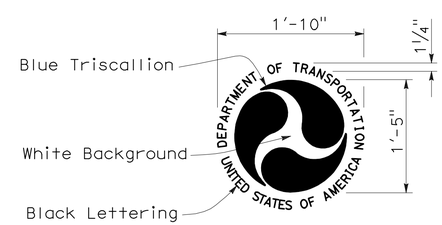

DETAIL D-2
(See Note 6)

STATE OF CALIFORNIA
DEPARTMENT OF TRANSPORTATION

CONSTRUCTION PROJECT FUNDING IDENTIFICATION SIGNS

NO SCALE

RSP T7 DATED NOVEMBER 17, 2006 SUPERSEDES STANDARD PLAN T7
DATED MAY 1, 2006 - PAGE 217 OF THE STANDARD PLANS BOOK DATED MAY 2006.

REVISED STANDARD PLAN RSP T7

2006 REVISED STANDARD PLAN RSP T7

9-7-06

DIST	COUNTY	ROUTE	POST MILES TOTAL PROJECT	SHEET NO.	TOTAL SHEETS
11	SD	54,805	1.8,5.5/9.4	503	635

LICENSED LANDSCAPE ARCHITECT

April 3, 2009
PLANS APPROVAL DATE

The State of California or its officers or agents shall not be responsible for the accuracy or completeness of electronic copies of this plan sheet.

LICENSED LANDSCAPE ARCHITECT — Robert B. Schott — 3895 — Signature — 11-30-10 Renewal Date — 2-25-09 Date — STATE OF CALIFORNIA

To accompany plans dated 12-5-11

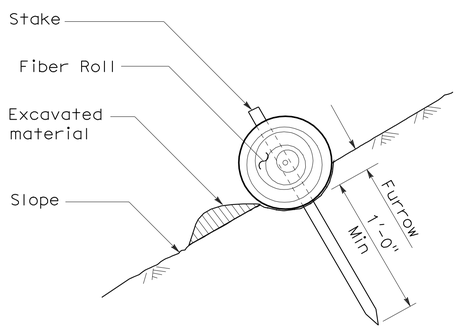

SECTION

TEMPORARY FIBER ROLL (TYPE 1)

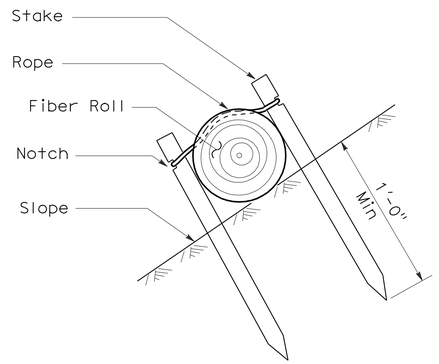

SECTION

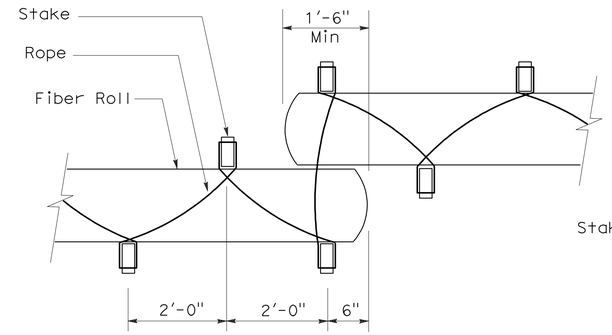

PLAN

TEMPORARY FIBER ROLL (TYPE 2)

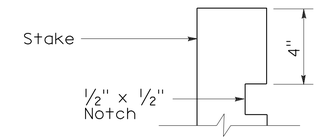

ELEVATION

STAKE NOTCH DETAIL

NOTES:

1. Temporary fiber roll spacing varies depending upon slope inclination.
2. Installations shown in the perspectives are for slope inclination of 10:1 and steeper.

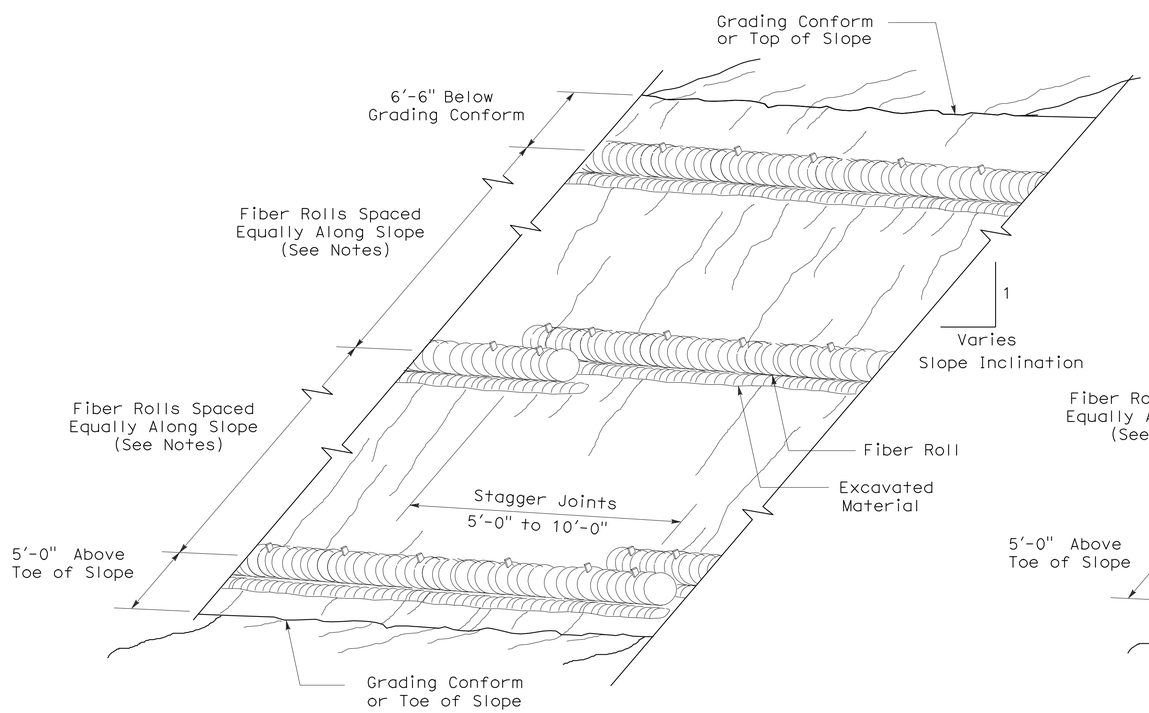

PERSPECTIVE

TEMPORARY FIBER ROLL (TYPE 1)

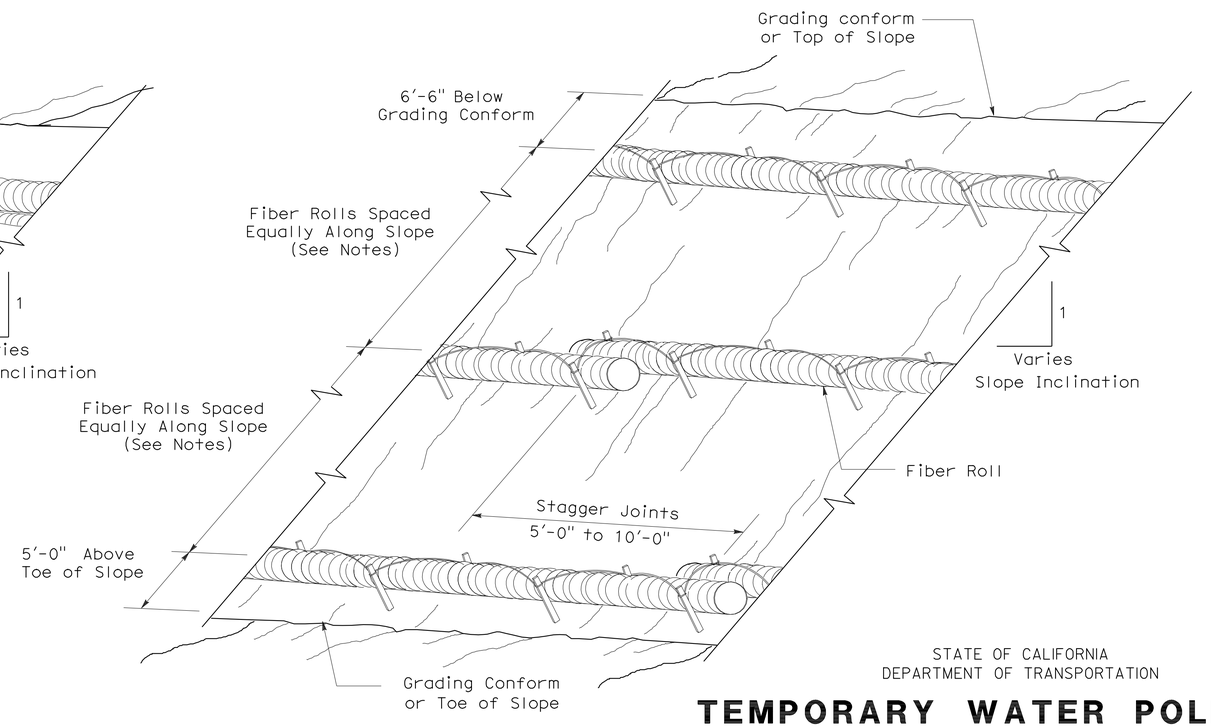

PERSPECTIVE

TEMPORARY FIBER ROLL (TYPE 2)

STATE OF CALIFORNIA
DEPARTMENT OF TRANSPORTATION

TEMPORARY WATER POLLUTION CONTROL DETAILS (TEMPORARY FIBER ROLL)

NO SCALE

RSP T56 DATED APRIL 3, 2009 SUPERSEDES STANDARD PLAN T56
DATED MAY 1, 2006 - PAGE 232 OF THE STANDARD PLANS BOOK DATED MAY 2006.

REVISED STANDARD PLAN RSP T56

2006 REVISED STANDARD PLAN RSP T56

2-23-09

DIST	COUNTY	ROUTE	POST MILES TOTAL PROJECT	SHEET NO.	TOTAL SHEETS
11	SD	54,805	1.8,5.5/9.4	504	635

LICENSED LANDSCAPE ARCHITECT

August 15, 2008
PLANS APPROVAL DATE

The State of California or its officers or agents shall not be responsible for the accuracy or completeness of electronic copies of this plan sheet.

LICENSED LANDSCAPE ARCHITECT — Robert B. Schott — Signature — 11-04-08 Renewal Date — 08-11-08 Date — STATE OF CALIFORNIA

To accompany plans dated 12-5-11

FLEXIBLE SEDIMENT BARRIER SPACING TABLE

SLOPE OF ROADWAY (PERCENT)	0 to 0.9	1 to 1.9	2 to 2.9	3 to 4	5+
INTERVAL BETWEEN BARRIERS	50′	35′	30′	25′	20′
ANGLE FROM FACE OF CURB	70°	70°	70°	45°	45°
SUGGESTED BARRIER LENGTH	6′	6′	6′	6′	6′

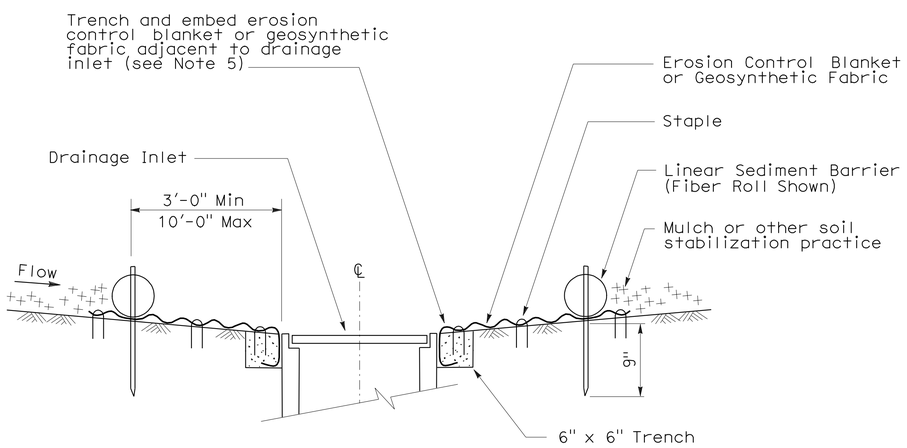

SECTION A-A

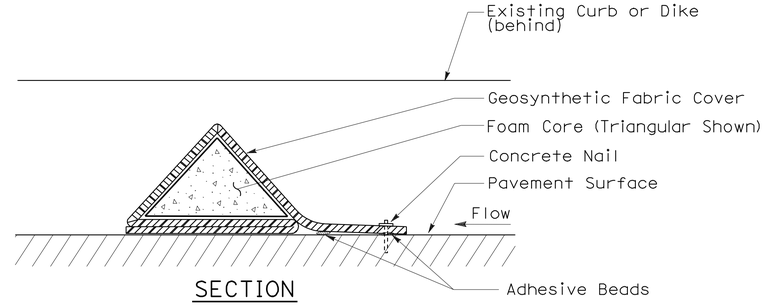

SECTION

FLEXIBLE SEDIMENT BARRIER DETAIL (FOAM BARRIER SHOWN)

NOTES:

1. See Standard Plan T51 for Temporary Silt Fence.
2. Dimensions may vary to fit field conditions.
3. Install a minimum of 3 flexible sediment barriers upstream of each drainage inlet to be protected.
4. Position erosion control blanket or geosynthetic fabric at edge of concrete apron and secure in trench.
5. Erosion control blanket or geosynthetic fabric is not required if the area adjacent to the drainage inlet is vegetated.

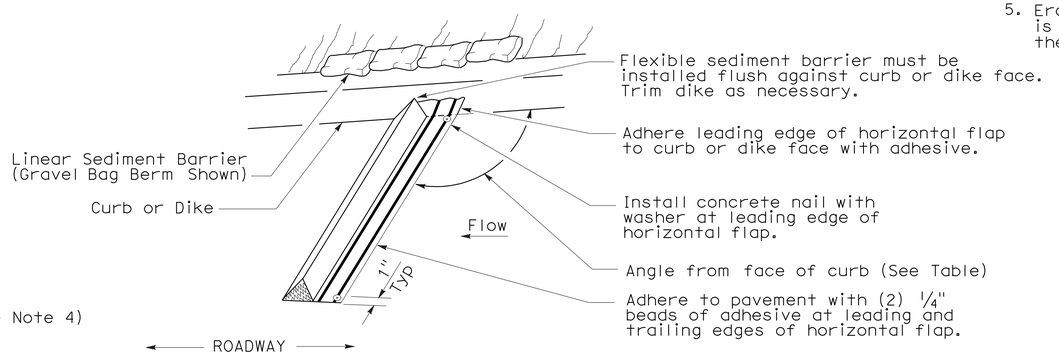

PERSPECTIVE

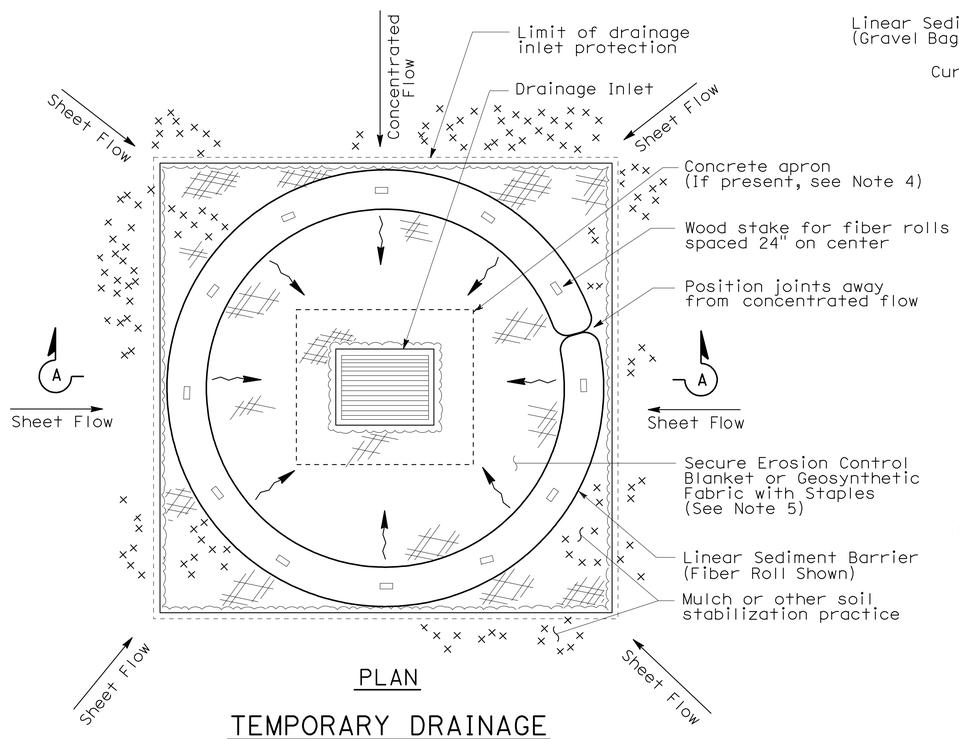

PLAN

TEMPORARY DRAINAGE INLET PROTECTION (TYPE 4A)

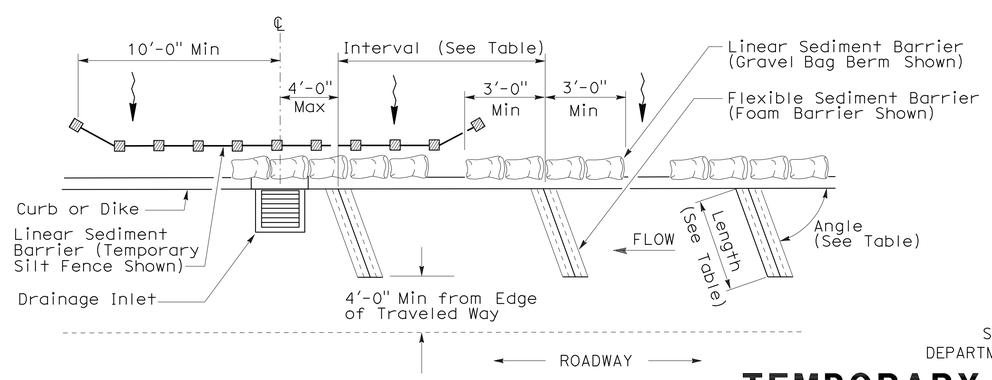

PLAN

TEMPORARY DRAINAGE INLET PROTECTION (TYPE 4B) FLEXIBLE SEDIMENT BARRIER

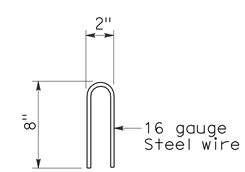

STAPLE DETAIL

STATE OF CALIFORNIA
DEPARTMENT OF TRANSPORTATION

TEMPORARY WATER POLLUTION CONTROL DETAILS (TEMPORARY DRAINAGE INLET PROTECTION)

NO SCALE

NSP T63 DATED AUGUST 15, 2008 SUPPLEMENTS THE STANDARD PLANS BOOK DATED MAY 2006.

NEW STANDARD PLAN NSP T63

2006 NEW STANDARD PLAN NSP T63

7-11-08

DIST	COUNTY	ROUTE	POST MILES TOTAL PROJECT	SHEET NO.	TOTAL SHEETS
11	SD	54,805	1.8,5.5/9.4	505	635

LICENSED LANDSCAPE ARCHITECT

August 15, 2008
PLANS APPROVAL DATE

LICENSED LANDSCAPE ARCHITECT
Robert B. Schott 3625
Signature
11-04-08
Renewal Date
08-11-08
Date
STATE OF CALIFORNIA

The State of California or its officers or agents shall not be responsible for the accuracy or completeness of electronic copies of this plan sheet.

To accompany plans dated 12-5-11

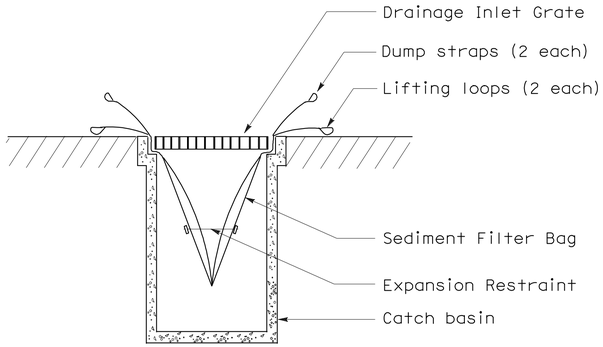

SECTION B-B

SEDIMENT FILTER BAG DETAIL

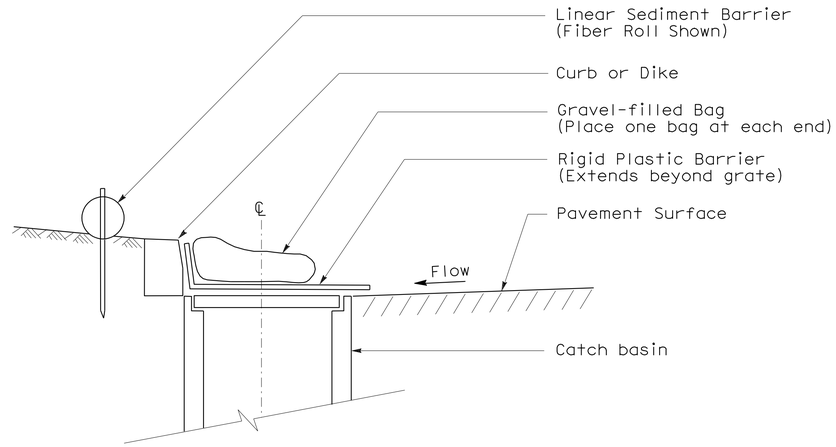

SECTION

TEMPORARY DRAINAGE INLET PROTECTION (TYPE 6A) (CATCH BASIN WITH GRATE)

NOTES:

1. See Standard Plan T51 for Temporary Silt Fence.
2. Dimensions may vary to fit field conditions.

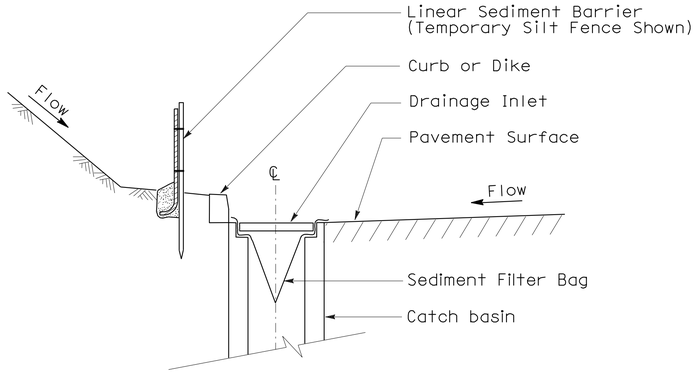

SECTION A-A

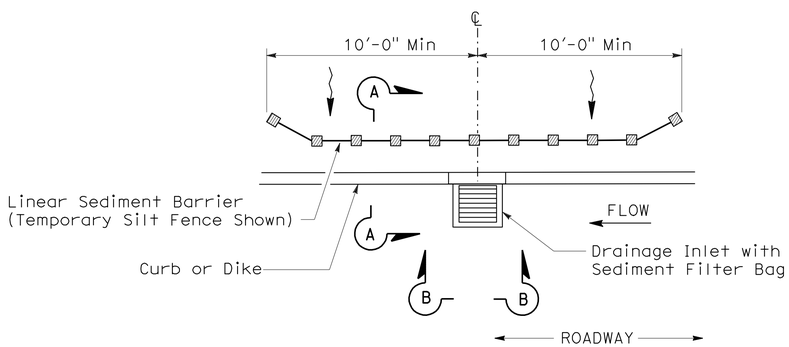

PLAN

TEMPORARY DRAINAGE INLET PROTECTION (TYPE 5) (SEDIMENT FILTER BAG)

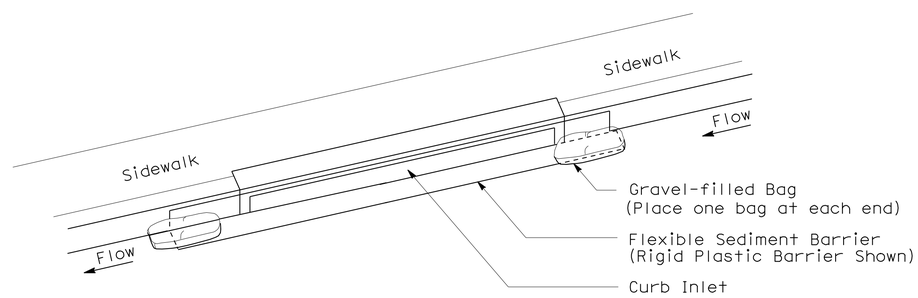

PERSPECTIVE

TEMPORARY DRAINAGE INLET PROTECTION (TYPE 6B) (CURB INLET WITHOUT GRATE)

STATE OF CALIFORNIA
DEPARTMENT OF TRANSPORTATION

TEMPORARY WATER POLLUTION CONTROL DETAILS (TEMPORARY DRAINAGE INLET PROTECTION)

NO SCALE

NSP T64 DATED AUGUST 15, 2008 SUPPLEMENTS
THE STANDARD PLANS BOOK DATED MAY 2006.

NEW STANDARD PLAN NSP T64

2006 NEW STANDARD PLAN NSP T64

DIST	COUNTY	ROUTE	POST MILES TOTAL PROJECT	SHEET NO.	TOTAL SHEETS
11	SD	54,805	1.8,5.5/9.4	506	635

LICENSED LANDSCAPE ARCHITECT

April 3, 2009
PLANS APPROVAL DATE

LICENSED LANDSCAPE ARCHITECT
Robert B. Schott 3025
Signature
11-30-10
Renewal Date
2-25-09
Date
STATE OF CALIFORNIA

The State of California or its officers or agents shall not be responsible for the accuracy or completeness of electronic copies of this plan sheet.

To accompany plans dated 12-5-11

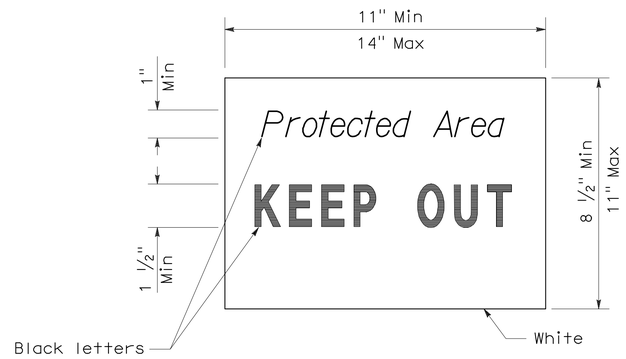

SIGN DETAIL

NOTE:

1. Temporary silt fence and temporary straw bale barrier shown for reference purposes only.

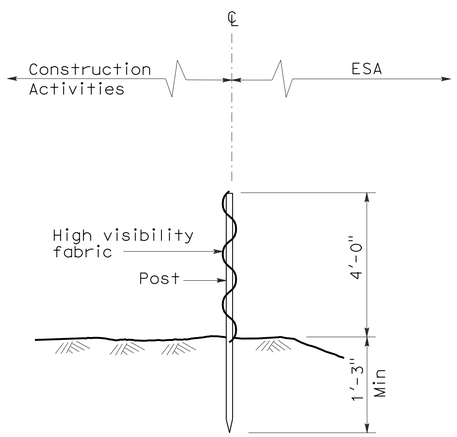

SECTION
TEMPORARY FENCE (TYPE ESA)

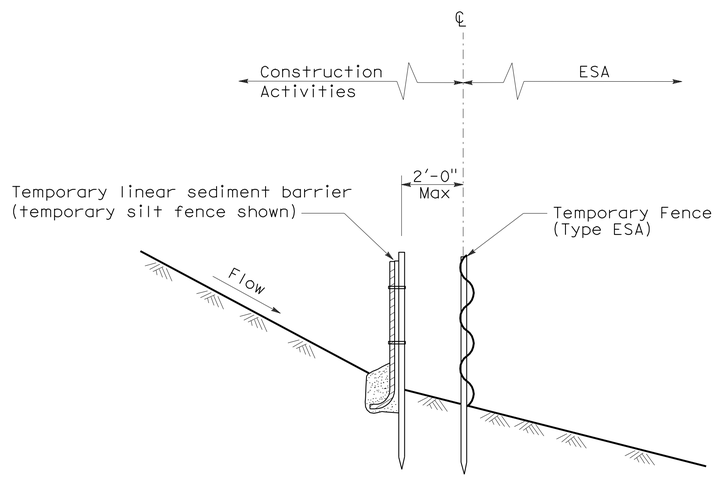

SECTION
PLACEMENT DETAIL
FOR TEMPORARY LINEAR SEDIMENT BARRIER
USED WITH TEMPORARY
FENCE (TYPE ESA)
(See Note 1)

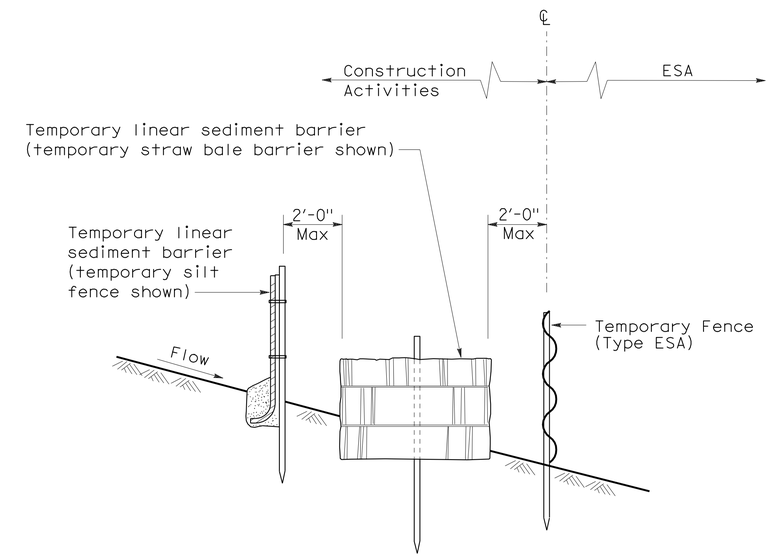

SECTION
PLACEMENT DETAIL
FOR TEMPORARY SILT FENCE
AND TEMPORARY STRAW BALE BARRIER
USED WITH TEMPORARY FENCE (TYPE ESA)
(See Note 1)

STATE OF CALIFORNIA
DEPARTMENT OF TRANSPORTATION

TEMPORARY WATER POLLUTION CONTROL DETAILS [TEMPORARY FENCE (TYPE ESA)]

NO SCALE

NSP T65 DATED APRIL 3, 2009 SUPPLEMENTS
THE STANDARD PLANS BOOK DATED MAY 2006.

NEW STANDARD PLAN NSP T65

2006 NEW STANDARD PLAN NSP T65

DIST	COUNTY	ROUTE	POST MILES TOTAL PROJECT	SHEET NO.	TOTAL SHEETS
11	SD	54,805	1.8,5.5/9.4	507	635

REGISTERED ELECTRICAL ENGINEER

October 5, 2007
PLANS APPROVAL DATE

REGISTERED PROFESSIONAL ENGINEER Jeffery G. McRae No. E14512 Exp. 6-30-08 ELECTRICAL STATE OF CALIFORNIA

The State of California or its officers or agents shall not be responsible for the accuracy or completeness of electronic copies of this plan sheet.

To accompany plans dated 12-5-11

ELECTROLIERS

STANDARD TYPES
15, 15D
15 STRUCTURE
21, 21D STRUCTURE
30
31
32
35
36-20A

High mast light pole

Double Arm lighting standard

Existing electrolier

Electrolier foundation (Future installation)

NOTES:

1. Luminaires shall be 310 W HPS when installed on Type 21, 21D, 30, 31, 32, 35 and 36-20A Standards, unless otherwise specified. Luminaires shall be 200 W HPS when installed on other type standards or poles, unless otherwise specified.
2. Luminaires shall be the cutoff type, ANSI Type Ⅲ medium cutoff lighting distribution, unless otherwise specified.
3. Variations noted adjacent to symbol on project plans.

Electrolier (see project notes or project plans)

Luminaire on wood pole

STANDARD NOTES:

- AB — Abandon. If applied to conduit, remove conductors.
- BC — Install pull box in existing conduit run.
- BP — Pedestrian barricade, type as indicated on plan.
- CB — Install conduit into existing pull box.
- CC — Connect new and existing conduit. Remove existing conductors and install conductors as indicated.
- CF — Conduit to remain for future use. Remove conductors. Install pull wire or rope.
- DH — Detector handhole.
- FA — Foundation to be abandoned.
- IS — Install sign on signal mast arm.
- NS — No slip base on standard.
- PEC — Photoelectric control.
- PEU — Photoelectric unit.
- RC — Equipment or material to be removed and become the property of the Contractor.
- RE — Remove electrolier, fuses and ballast. Tape ends of conductors.
- RL — Relocate equipment.
- RR — Remove and reuse equipment.
- RS — Remove and salvage equipment.
- SC — Splice new to existing conductors.
- SD — Service disconnect.
- SF — Standard to remain for future use. Remove luminaire, pole conductors, fuses and ballast.
- TSP — Telephone service point.

ABBREVIATIONS AND EQUIPMENT DESIGNATIONS

PROPOSED	EXISTING	
BBS	bbs	Battery backup system
BC	bc	Bolt circle
C	C	Conduit
CCTV	cctv	Closed circuit television
CKT	ckt	Circuit
CMS	cms	Changeable message sign
DLC	dlc	Loop detector lead-in cable
EMS	ems	Extinguishable message sign
EVC	evc	Emergency vehicle cable
EVD	evd	Emergency vehicle detector
FB	fb	Flashing beacon
FBCA	fbca	Flashing beacon control assembly
FBS	fbs	Flashing beacon with slip base
FO	fo	Fiber optic
G	G	Ground (Equipment Grounding Conductor)
GFCI	GFCI	Ground fault circuit interrupt
HAR	har	Highway advisory radio
HEX	hex	Hexagonal
HPS	hps	High pressure sodium
IISNS	iisns	Internally illuminated street name sign
ISL	isl	Induction sign lighting
LED	led	Light emitting diode
LMA	lma	Luminaire mast arm
LPS	lps	Low pressure sodium
LTG	ltg	Lighting
LUM	lum	Luminaire
MAT	mat	Mast arm mounting vehicle signal faces, top attachment
MAS	mas	Mast arm mounting vehicle signal faces, side attachment
MAS-4A	mas-4A	Mast arm mounting vehicle signal faces, side attachment - 4 signal section
MAS-4B	mas-4B	
MAS-4C	mas-4C	
MAS-5A	mas-5A	Mast arm mounting vehicle signal faces, side attachment - 5 signal section
MAS-5B	mas-5B	
MC	mc	Mercury contactor
M/M	m/m	Multiple to multiple transformer
MT	mt	Conduit with pull wire or rope only
MTG	mtg	Mounting
	mv	Mercury vapor lighting fixture
N	N	Neutral (Grounded Conductor)
NC	NC	Normally closed
NO	NO	Normally open
PB	pb	Pull box
PEC	pec	Photoelectric control (Type Ⅰ, Ⅱ, Ⅲ, Ⅳ or Ⅴ as shown)
PED	ped	Pedestrian
PEU	peu	Photoelectric unit
PPB	ppb	Pedestrian push button
RL		Relocated equipment
RM	rm	Ramp metering
SB	sb	Slip base
SIC	sic	Signal interconnect cable
SIG	sig	Signal
SMA	sma	Signal mast arm
SNS	sns	Street name sign
SP	sp	Service point
TDC	tdc	Telephone demarcation cabinet
TMS	tms	Traffic monitoring station
TOS	tos	Traffic Operations System
VEH	veh	Vehicle
XFMR	xfmr	Transformer
COMM	comm	Communication
RWIS	rwis	Roadway weather information system

SOFFIT AND WALL MOUNTED LUMINAIRES

Pendant, 70 W HPS unless otherwise specified.

Flush, 70 W HPS unless otherwise specified.

Wall surface, 70 W HPS unless otherwise specified.

Existing soffit or wall luminaire to remain unmodified.

Existing soffit or wall luminaire to be modified as specified.

NOTE:

Arrow indicates "street side" of luminaire.

STATE OF CALIFORNIA
DEPARTMENT OF TRANSPORTATION

ELECTRICAL SYSTEMS (SYMBOLS AND ABBREVIATIONS)

NO SCALE

RSP ES-1A DATED OCTOBER 5, 2007 SUPERSEDES STANDARD PLAN ES-1A DATED MAY 1, 2006 - PAGE 400 OF THE STANDARD PLANS BOOK DATED MAY 2006.

REVISED STANDARD PLAN RSP ES-1A

2006 REVISED STANDARD PLAN RSP ES-1A

DIST	COUNTY	ROUTE	POST MILES TOTAL PROJECT	SHEET NO.	TOTAL SHEETS
11	SD	54,805	1.8,5.5/9.4	508	635

REGISTERED ELECTRICAL ENGINEER

October 5, 2007
PLANS APPROVAL DATE

REGISTERED PROFESSIONAL ENGINEER
Jeffery G. McRae
No. E14512
Exp. 6-30-08
ELECTRICAL
STATE OF CALIFORNIA

The State of California or its officers or agents shall not be responsible for the accuracy or completeness of electronic copies of this plan sheet.

To accompany plans dated 12-5-11

CONDUIT

PROPOSED	EXISTING	
		Lighting Conduit, unless otherwise indicated or noted
		Traffic signal conduit
C	c	Communication conduit
T	t	Telephone conduit
F	f	Fire alarm conduit
FO	fo	Fiber optic conduit
		Conduit termination (RSP ES-9A C)
R	r	Conduit riser in/on structure or service pole

SERVICE EQUIPMENT

PROPOSED	EXISTING	
OH	oh	Overhead lines
U	U	Wood pole "U" indicates utility owned
		Pole guy with anchor
		Utility transformer - ground mounted
III		Service equipment enclosure type
		Service equipment enclosure door indicates front of enclosure
T	t	Telephone demarcation cabinet

POLE-MOUNTED SERVICE DESIGNATION

Type of installation

TYPE H SERVICE - 28'-10" ← Pole height above grade

ILLUMINATED OVERHEAD SIGN

PROPOSED	EXISTING	
		Overhead sign - Single post
		Overhead sign - Two post
		Overhead sign - Mounted on structure
		Overhead sign with electrolier

SIGNAL EQUIPMENT

PROPOSED	EXISTING	
		Pedestrian signal face
		Pedestrian push button post
		Pedestrian barricade
		Vehicle signal face (with backplate, 3-Section: red, yellow and green)
		Vehicle signal face with angle visors
PV	PV	Modifications of basic symbols: "L" indicates all non-arrow sections louvered "LG" indicates louvered green section only "PV" indicates 12" programmed visibility sections "8" indicates all 8" sections (only when specified)
		Type 15TS and Vehicle signal face
		Vehicle signal face with red, yellow and green left arrow sections
		Vehicle signal face with red and yellow sections and up green arrow
		Vehicle signal face (5 Section) with red, yellow and green sections and yellow and green right arrows
		Type 1 Standard and attached vehicle signal faces
		Standard with signal mast arm only and attached vehicle signal faces and internally illuminated street name sign
		Type 33 Standard, Left-turn vehicle signal face and sign
		Standard with luminaire and signal mast arms and attached vehicle signal faces
		Cantilever flashing beacon Type 9 Frame, with a sign unless otherwise specified or indicated
		Type 15-FBS Standard with two vehicle signal face sections with lens, backplate and visor with a sign
R	Y	Flashing beacon. One vehicle signal face section with lens, backplate and visor. "R" indicates red indication, "Y" indicates yellow indication
		Controller assembly. Door indicates front of cabinet

SIGNAL EQUIPMENT Cont

PROPOSED	EXISTING	
		Guard post
		Type 1 Standard with "Meter On" sign
		Emergency Vehicle detector

NOTES:

1. All signal sections shall be 12" unless shown otherwise.
2. Signal heads shall be provided with backplates unless shown otherwise.
3. Signal indication shall be LED.

STATE OF CALIFORNIA
DEPARTMENT OF TRANSPORTATION

ELECTRICAL SYSTEMS (SYMBOLS AND ABBREVIATIONS)

NO SCALE

RSP ES-1B DATED OCTOBER 5, 2007 SUPERCEDES STANDARD PLAN ES-1B DATED MAY 1, 2006 - PAGE 401 OF THE STANDARD PLANS BOOK DATED MAY 2006.

REVISED STANDARD PLAN RSP ES-1B

2006 REVISED STANDARD PLAN RSP ES-1B

DIST	COUNTY	ROUTE	POST MILES TOTAL PROJECT	SHEET NO.	TOTAL SHEETS
11	SD	54,805	1.8,5.5/9.4	509	635

Jeffery G. McRae
REGISTERED ELECTRICAL ENGINEER

October 5, 2007
PLANS APPROVAL DATE

REGISTERED PROFESSIONAL ENGINEER
Jeffery G. McRae
No. E14512
Exp. 6-30-08
ELECTRICAL
STATE OF CALIFORNIA

The State of California or its officers or agents shall not be responsible for the accuracy or completeness of electronic copies of this plan sheet.

To accompany plans dated 12-5-11

EQUIPMENT IDENTIFICATION

ILLUMINATED SIGN IDENTIFICATION NUMBER:

Sign No. 12345 — Sign number - Place on post or structure

10 ISL SCI 1.0

- 1.0 — Transformer rating (kVA)
- SCI — Lighting control type
- ISL — Number and type of fixtures

Do NOT place on standard or structure

ELECTROLIER OR EQUIPMENT IDENTIFICATION NUMBER:

12345 - 15'-0"

- 15'-0" — Mast arm length, if shown. Do not place on standard or structure.
- 12345 — Equipment number - Place on standard or structure. Existing equipment numbers are shown in parenthesis

CONDUIT AND CONDUCTOR IDENTIFICATION:

1½"C, 2#10, 15#14, 2 DLC

- 2#10, 15#14, 2 DLC — Number and size of conductors and cables
- 1½"C — Size of conduit in inches

Ø1, Ø2, Ø2P, etc.	Traffic phase identification for signal faces, detectors and phase diagrams
1 2 3	Project note numbers
A B C	Equipment description, installation or item numbers
1 2 3	Conduit run numbers

SIGNAL AND LIGHTING STANDARD (TYPICAL DESIGNATION):

19A - 3 - 100

- 100 — Wind velocity = 100 mph
- 3 — Case 3 arm loading
- 19A — Standard type
- Standard Plan sheet number
- Detail number or letter

MISCELLANEOUS EQUIPMENT

PROPOSED	EXISTING	
CMS	cms	Changeable message sign
		Closed circuit television camera
		Highway advisory radio pole and antenna
EMS	ems	Extinguishable message sign
M V	m v	Detection device M = Microwave sensor V = Video image sensor

WIRING DIAGRAM LEGEND

P	Pole
CB	Circuit breaker
A	Ampere
V	Volt
M	Metered
UM	Unmetered
NB	Neutral bus
GB	Ground bus
G	Equipment grounding conductor
N	Grounded conductor (Neutral)

- External conductor
- Conductor or bus
- Tie point
- Contactor coil
- Contactor, Contact NO
- Terminal blocks
- Contactor, Contact NC
- Enclosure bond
- Grounding electrode
- Circuit breaker
- Receptacle

PULL BOXES

PROPOSED EXISTING

Pull box-No. 5 unless otherwise indicated or noted.

3 — 9A(21)

Pull box-Additional designations or descriptions

3 = No. 3½ pull box
5 = No. 5 pull box
6 = No. 6 pull box
7 = No. 7 (Ceiling pull box)
8 = No. 8 (Pendant soffit pull box)
9 = No. 9 pull box
9A = No. 9A pull box

(C) = Communications pull box
(E) = Pull box with extension
(S) = Sprinkler control pull box
(21) = Anchor bolts and conduit for future installation of Type 21 Standard
(T) = Traffic pull box

VEHICLE DETECTORS

5 J 9 U

- U = Upper
- L = Lower
- Slot number in input file
- Input file (I or J)
- Phase

PROPOSED	EXISTING	
		Type A detector loop. Outline of sawcut shown.
		Type B detector loop. Outline of sawcut shown.
		Type C detector loop. Outline of sawcut shown.
		Type D detector loop. Outline of sawcut shown.
		Type E detector loop. Outline of sawcut shown.
		Type Q detector loop. Outline of sawcut shown.
		Magnetic detector
DH	dh	Detector handhole
		Microwave or video detection zone

STATE OF CALIFORNIA
DEPARTMENT OF TRANSPORTATION

ELECTRICAL SYSTEMS (SYMBOLS AND ABBREVIATIONS)

NO SCALE

RSP ES-1C DATED OCTOBER 5, 2007 SUPERCEDES STANDARD PLAN ES-1C DATED MAY 1, 2006 - PAGE 402 OF THE STANDARD PLANS BOOK DATED MAY 2006.

REVISED STANDARD PLAN RSP ES-1C

2006 REVISED STANDARD PLAN RSP ES-1C

DIST	COUNTY	ROUTE	POST MILES TOTAL PROJECT	SHEET NO.	TOTAL SHEETS
11	SD	54,805	1.8,5.5/9.4	510	635

REGISTERED ELECTRICAL ENGINEER

October 5, 2007
PLANS APPROVAL DATE

REGISTERED PROFESSIONAL ENGINEER
Jeffery G. McRae
No. E14512
Exp. 6-30-08
ELECTRICAL
STATE OF CALIFORNIA

The State of California or its officers or agents shall not be responsible for the accuracy or completeness of electronic copies of this plan sheet.

To accompany plans dated 12-5-11

2006 REVISED STANDARD PLAN RSP ES-2C

NOTES-TYPE III SERVICE EQUIPMENT ENCLOSURES:

1. Service equipment enclosure and metering equipment shall meet the requirements of the service utility. The meter area shall have a sealable, lockable, weathertight cover that can be removed without the use of tools.

2. Service equipment enclosures shall be factory wired and conform to NEMA standards.

3. Dimensions of service equipment enclosures shall meet the requirements of the service utility.

4. The dead front panels on Type III service equipment enclosures shall have a continuous stainless steel or aluminum piano hinge. The panel in front of the breakers shall be secured with a latch or captive screws. No live parts shall be mounted on the dead front panel.

5. The exterior door shall have provisions for padlocking. The padlock hole shall be a minimum diameter of 7/16".

6. Enclosures housing transformers of more than one kVA shall have effective screened ventilation louver of not less than 50 square inches. Screen shall be stainless steel No. 304, with a No. 10 size mesh. Framed screen shall be secured with at least four bolts.

7. Fasteners on the exterior of the enclosure shall be vandal-resistant and shall not be removable from the exterior. Exterior screws, nuts, bolts and washers shall be stainless steel.

8. Landing lugs for incoming service conductors shall be compatible with either copper or aluminum conductors sized to suit the conductors shown on the plan. Landing lugs shall be copper or tin-plated aluminum. Neutral bus shall be rated for 125 A and be suitable for copper or aluminum conductors unless otherwise specified. The terminal shall include but not be limited to:

   a) Incoming terminals (landing lugs)
   b) Neutral lugs
   c) Solid neutral terminal strip

9. At least 6 standard single pole circuit breaker spaces, 3/4" nominal, shall be provided for branch circuits. Circuit breaker interiors shall be copper. Interiors of enclosure shall accept plug-in or cable-in/cable-out circuit breakers.

10. Control wiring shall be 600 V, 14 stranded machine tool wire. Where subject to flexing, 19 strand wire shall be used.

11. Main bus shall be rated for 125 A and shall be tin-plated copper.

12. A plastic laminated wiring diagram shall be provided with brass mounting eyelets and attached to the inside of the enclosure and the wiring diagram shall be affixed to the interior with a UL or ETL approved method.

13. An engraved phenolic nameplate on the dead front panel indicating the function of each circuit or device shall be installed with stainless steel rivets or stainless steel screws:

    a) Adjacent to the breaker or device with character size a minimum of 1/8".

    b) At the top of the exterior door panel indicating State system number, voltage level and number of phases with character size a minimum of 3/16".

14. The plan shows the approximate location of devices within the enclosure. Components may be rearranged, however, the "working" clearances within the service equipment enclosure shall be maintained.

15. In unpaved areas a raised portland cement concrete pad 2'-0" x 4" x width of foundation shall be constructed in front of new service equipment enclosure installation. Pad shall be set to elevation of foundation.

16. Foundation shall extend 2" minimum beyond edge of service equipment enclosure.

17. Internal bus, where shown, is typical only. Alternative design of proposed service equipment enclosure shall be submitted to the Engineer for approval.

18. Plug-in circuit breakers may be mounted in the vertical or horizontal position. Cable-in/cable-out circuit breakers shall be mounted in the vertical position.

19. Type III-AF and Type III-BF service equipment enclosures shall have the meter viewing windows located on the front side of the service equipment enclosures.

20. Type III-AR and Type III-BR service equipment enclosures shall be similarly constructed as Type III-AF and Type III-BF respectively, except the meter viewing windows shall be located on the back side of the service equipment enclosures.

21. Minimum clearance shall be required for front and back of service equipment enclosure per National Electrical Code, Article 110.26, "Spaces About Electric Equipment (600 Volts, Nominal, or Less)."

STATE OF CALIFORNIA
DEPARTMENT OF TRANSPORTATION

ELECTRICAL SYSTEMS (SERVICE EQUIPMENT NOTES TYPE III SERIES)

NO SCALE

RSP ES-2C DATED OCTOBER 5, 2007 SUPERCEDES STANDARD PLAN ES-2C
DATED MAY 1, 2006 - PAGE 405 OF THE STANDARD PLANS BOOK DATED MAY 2006.

REVISED STANDARD PLAN RSP ES-2C

DIST	COUNTY	ROUTE	POST MILES TOTAL PROJECT	SHEET NO.	TOTAL SHEETS
11	SD	54,805	1.8,5.5/9.4	511	635

REGISTERED ELECTRICAL ENGINEER

October 5, 2007
PLANS APPROVAL DATE

REGISTERED PROFESSIONAL ENGINEER Jeffery G. McRae No. E14512 Exp. 6-30-08 ELECTRICAL STATE OF CALIFORNIA

The State of California or its officers or agents shall not be responsible for the accuracy or completeness of electronic copies of this plan sheet.

To accompany plans dated 12-5-11

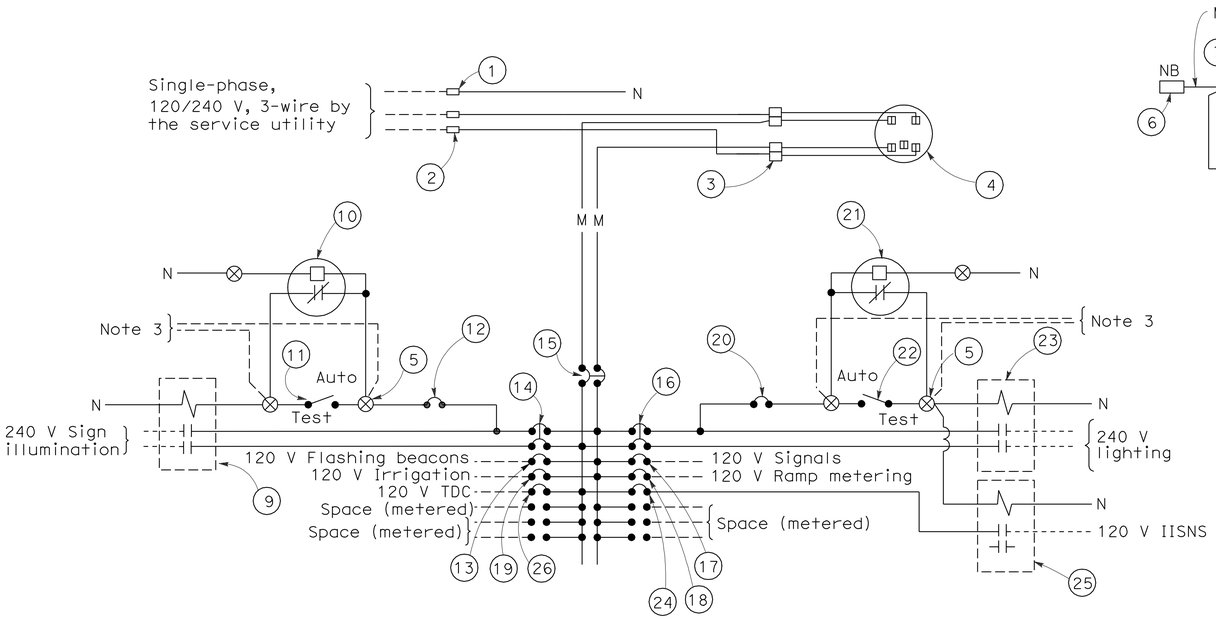

120/240 V SERVICE WIRING DIAGRAM (TYPICAL)

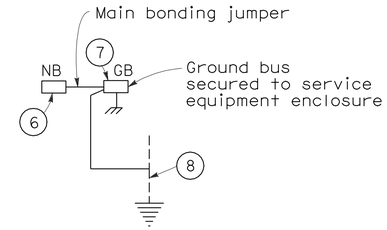

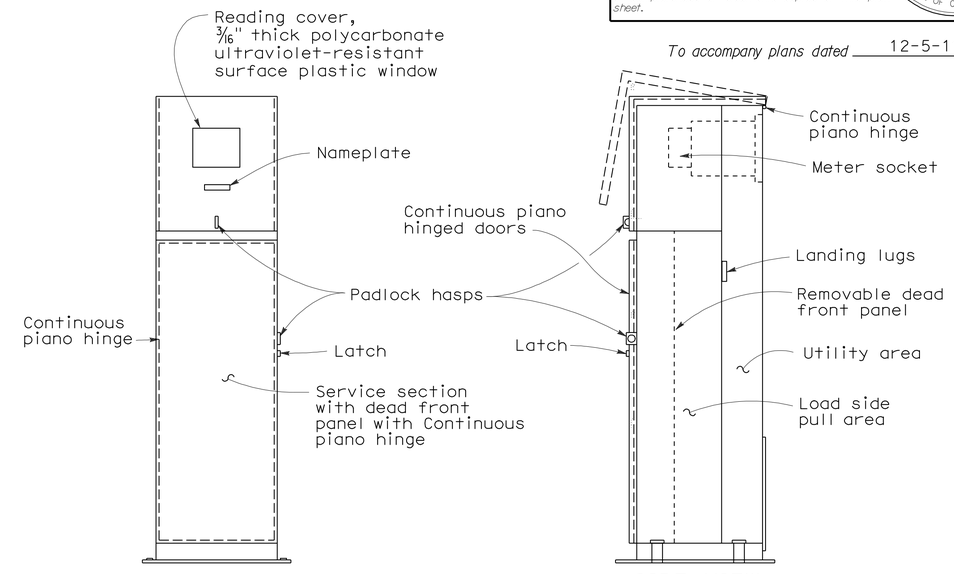

FRONT VIEW

SIDE VIEW

TYPE III-BF SERVICE EQUIPMENT ENCLOSURE WITH PROVISIONS FOR ONE 100 A METER (TYPICAL)

TYPE III-B SERVICE (120/240 V) EQUIPMENT LEGEND		
ITEM No.	COMPONENT	NAME PLATE DESCRIPTION
1	Neutral lug	
2	Landing lug (Note 6)	
3	Test bypass facility	
4	Meter socket and support	
5	Terminal blocks	
6	Neutral bus	
7	Ground bus	
8	Grounding electrode	
9	30 A, 2PNO Contactor	Sign Illumination
10	Photoelectric unit (Note 7)	
11	15 A, 1P, Test switch	Sign Illumination Test Switch
12	15 A, 120 V, 1P, CB	Sign Illumination Control
13	15 A, 120 V, 1P, CB	Flashing Beacon
14	30 A, 240 V, 2P, CB	Sign Illumination
15	100 A, 240 V, 2P, CB	Main Breaker
16	30 A, 240 V, 2P, CB	Lighting
17	50 A, 120 V, 1P, CB	Signals
18	30 A, 120 V, 1P, CB	Ramp Metering
19	20 A, 120 V, 1P, CB	Irrigation
20	15 A, 120 V, 1P, CB	Lighting Control
21	Photoelectric unit (Note 7)	
22	15 A, 1P, Test switch	Lighting Test Switch
23	60 A, 2PNO Contactor	Lighting
24	15 A, 120 V, 1P, CB	IISNS
25	30 A, 2PNO Contactor	IISNS
26	20 A, 120 V, IP, CB	Telephone Demarcation Cabinet

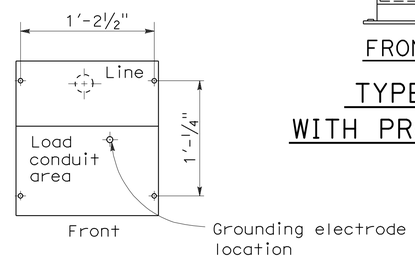

BASE FOR TYPE III-B SERVICE EQUIPMENT ENCLOSURE

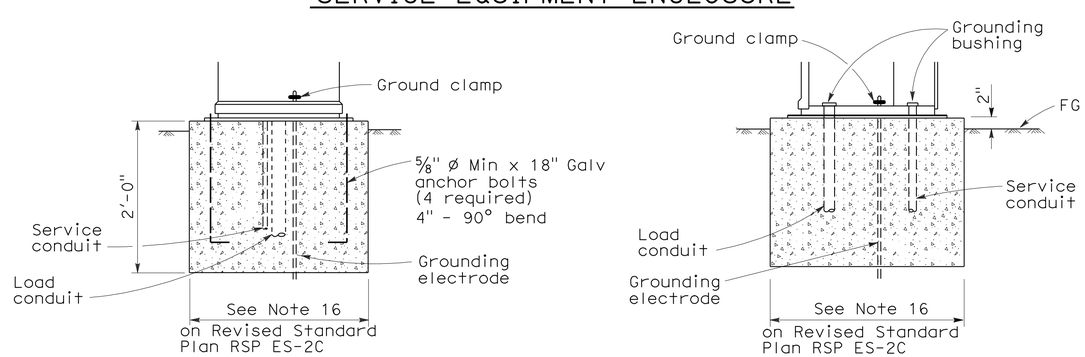

FRONT VIEW

SIDE VIEW

TYPE III-B SERVICE EQUIPMENT ENCLOSURE FOUNDATION DETAILS

NOTES: (FOR SERVICE EQUIPMENT ENCLOSURE)

1. Voltage ratings of service equipment shall conform to the service voltages indicated on the plans.
2. Unless otherwise indicated on the plans, service equipment items shall be provided for each service equipment enclosure as shown.
3. Connect to remote test switch mounted on lighting standards, sign post or structure when required.
4. Items No. 1 and 6 shall be isolated from the service equipment enclosure.
5. Meter sockets shall be 5 clip type.
6. The landing lug shall be suitable for multiple conductors.
7. Type V photoelectric control shall be used unless otherwise indicated on the plans.

STATE OF CALIFORNIA
DEPARTMENT OF TRANSPORTATION

ELECTRICAL SYSTEMS (SERVICE EQUIPMENT AND TYPICAL WIRING DIAGRAM, TYPE III-B SERIES)

NO SCALE

RSP ES-2E DATED OCTOBER 5, 2007 SUPERCEDES STANDARD PLAN ES-2E DATED MAY 1, 2006 - PAGE 407 OF THE STANDARD PLANS BOOK DATED MAY 2006.

REVISED STANDARD PLAN RSP ES-2E

2006 REVISED STANDARD PLAN RSP ES-2E

7-10-07

DIST	COUNTY	ROUTE	POST MILES TOTAL PROJECT	SHEET NO.	TOTAL SHEETS
11	SD	54,805	1.8,5.5/9.4	512	635

REGISTERED ELECTRICAL ENGINEER

October 5, 2007
PLANS APPROVAL DATE

REGISTERED PROFESSIONAL ENGINEER Jeffery G. McRae No. E14512 Exp. 6-30-08 ELECTRICAL STATE OF CALIFORNIA

The State of California or its officers or agents shall not be responsible for the accuracy or completeness of electronic copies of this plan sheet.

To accompany plans dated 12-5-11

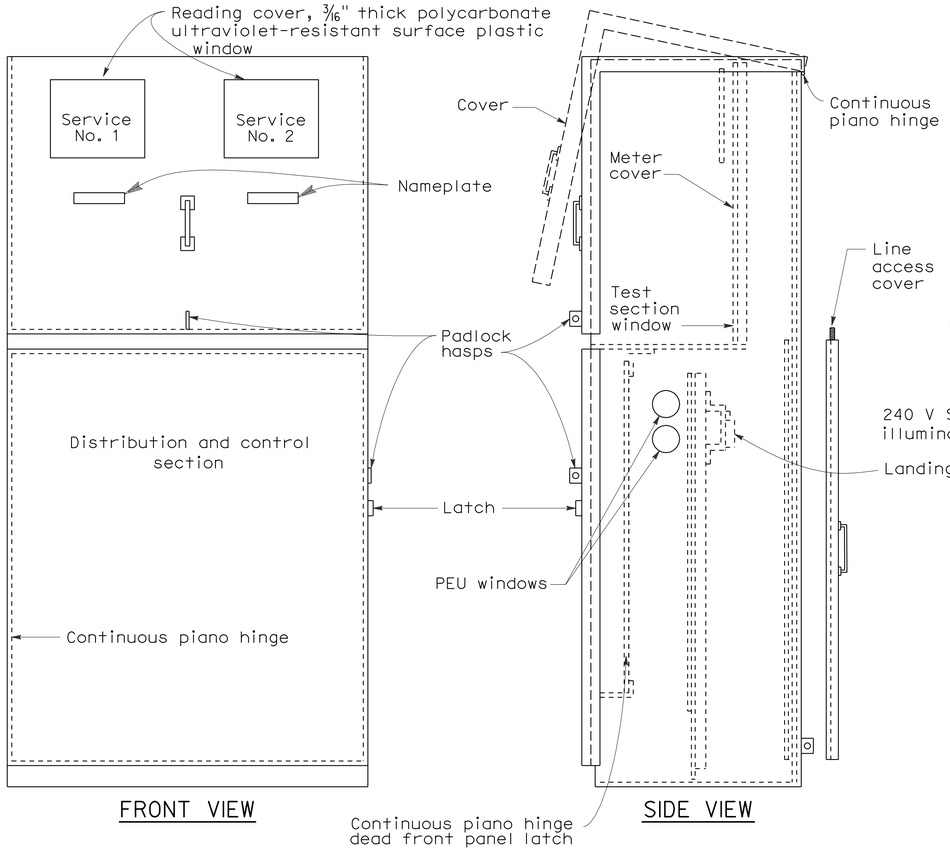

TYPE III-CF SERVICE EQUIPMENT ENCLOSURE WITH PROVISIONS FOR TWO 100 A METERS (TYPICAL)

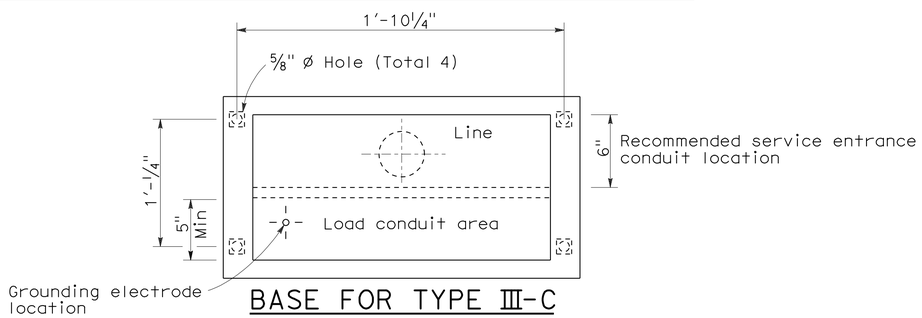

BASE FOR TYPE III-C SERVICE EQUIPMENT ENCLOSURE

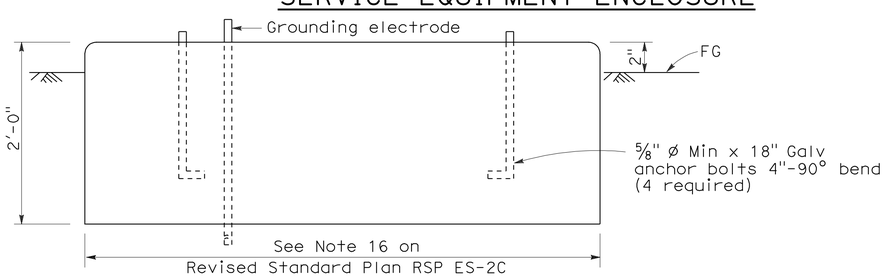

FOUNDATION DETAIL

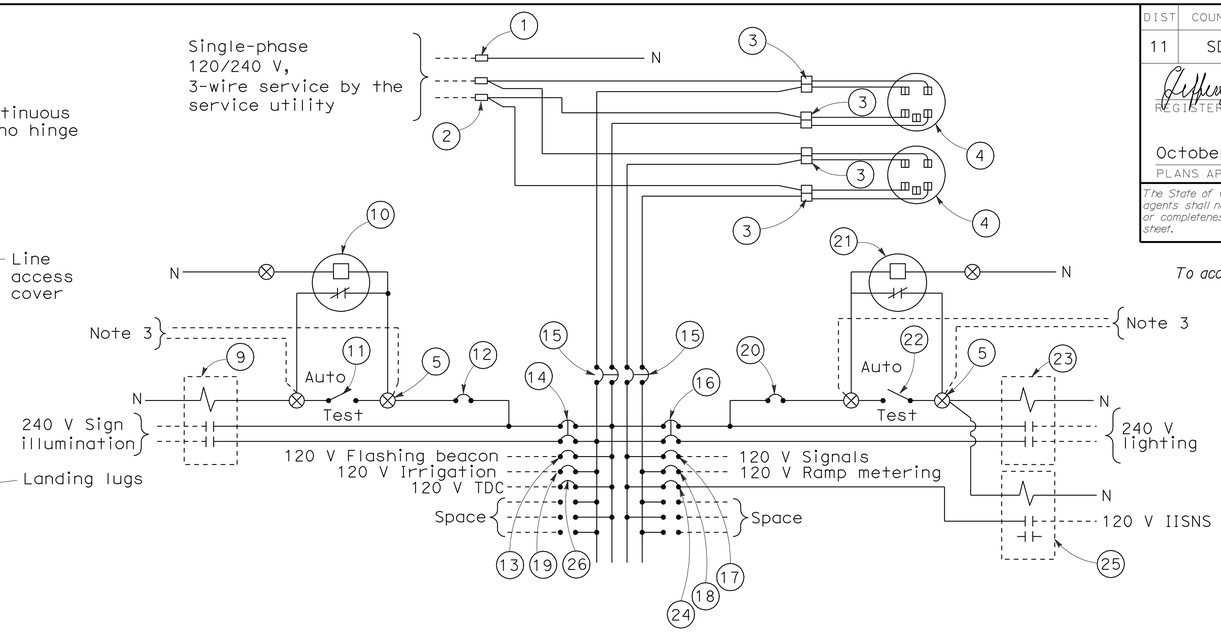

120/240 V SERVICE WIRING DIAGRAM (TYPICAL)

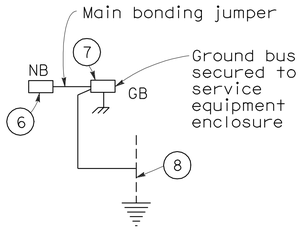

TYPE III-C SERVICE (120/240 V) EQUIPMENT LEGEND

ITEM No.	COMPONENT	NAME PLATE DESCRIPTION	ITEM No.	COMPONENT	NAME PLATE DESCRIPTION
1	Neutral lug		14	30 A, 240 V, 2P, CB	Sign Illumination
2	Landing lug (Note 6)		15	100 A, 240 V, 2P, CB	Main Breaker
3	Test bypass facility		16	30 A, 240 V, 2P, CB	Lighting
4	Meter socket and support		17	50 A, 120 V, 1P, CB	Signals
5	Terminal blocks		18	30 A, 120 V, 1P, CB	Ramp Metering
6	Neutral bus		19	20 A, 120 V, 1P, CB	Irrigation
7	Ground bus		20	15 A, 120 V, 1P, CB	Lighting Control
8	Grounding electrode		21	Photoelectric unit (Note 7)	
9	30 A, 2PNO, Contactor	Sign Illumination	22	15 A, 1P, Test switch	Lighting Control
10	Photoelectric unit (Note 7)		23	60 A, 2PNO Contactor	Lighting
11	15 A, 1P, Test switch	Sign Illumination Test Switch	24	15 A, 120 V, 1P, CB	IISNS
12	15 A, 120 V, 1P, CB	Sign Illumination Control	25	30 A, 2PNO Contactor	IISNS
13	15 A, 120 V, 1P, CB	Flashing Beacon	26	20 A, 120 V, 1P, CB	Telephone Demarcation Cabinet

NOTES: (FOR SERVICE EQUIPMENT ENCLOSURE)

1. Voltage ratings of service equipment shall conform to the service voltages indicated on the plans.
2. Unless otherwise indicated on the plans, service equipment items shall be provided for each service equipment enclosure as shown.
3. Connect to remote test switch mounted on lighting standards, sign post or structure when required.
4. Items No. 1 and 6 shall be isolated from the service equipment enclosure.
5. Meter sockets shall be 5 clip type.
6. The landing lug shall be suitable for multiple conductors.
7. Type V photoelectric control shall be used unless otherwise indicated on the plans.

STATE OF CALIFORNIA
DEPARTMENT OF TRANSPORTATION

ELECTRICAL SYSTEMS (SERVICE EQUIPMENT AND TYPICAL WIRING DIAGRAM TYPE III-C SERIES)

NO SCALE

RSP ES-2F DATED OCTOBER 5, 2007 SUPERCEDES STANDARD PLAN ES-2F DATED MAY 1, 2006 - PAGE 408 OF THE STANDARD PLANS BOOK DATED MAY 2006.

REVISED STANDARD PLAN RSP ES-2F

2006 REVISED STANDARD PLAN RSP ES-2F

DIST	COUNTY	ROUTE	POST MILES TOTAL PROJECT	SHEET NO.	TOTAL SHEETS
11	SD	54,805	1.8,5.5/9.4	513	635

REGISTERED ELECTRICAL ENGINEER

October 5, 2007
PLANS APPROVAL DATE

REGISTERED PROFESSIONAL ENGINEER Jeffery G. McRae No. E14512 Exp. 6-30-08 ELECTRICAL STATE OF CALIFORNIA

The State of California or its officers or agents shall not be responsible for the accuracy or completeness of electronic copies of this plan sheet.

To accompany plans dated 12-5-11

LOOP INSTALLATION PROCEDURE

1. Loops shall be centered in lanes.
2. Saw slots in pavement for loop conductors as shown in details.
3. Distance between side of loop and a lead-in saw cut from adjacent detectors shall be 2'-0" minimum. Distance between lead-in saw cuts shall be 6" minimum.
4. Bottom of saw slot shall be smooth with no sharp edges.
5. Slots shall be washed until clean, blown out and thoroughly dried before installing loop conductors.
6. Adjacent loops on the same sensor unit channel shall be wound in opposite directions.
7. Identify and tag loop circuit pairs in the pull box with loop number, start (S) and finish (F) of conductor. Identify and tag lead-in-cable with sensor number and phase.
8. Install loop conductor in slot using a 3/16" to 1/4" thick wood paddle. Hold loop conductors with wood paddles (at the bottom of the sawed slot) during sealant placement.
9. No more than 2 twisted pairs shall be installed in one sawed slot.
10. Allow additional 5'-0" of slack length of conductor for the lead-in run to pull box.
11. The additional length of each conductor for each loop shall be twisted together into a pair (6 turns per 3'-4" minimum) before being placed in the slot and conduit leading to pull box.
12. Test each loop circuit for continuity, circuit resistance and insulation resistance at the pull box before filling slots.
13. Fill slots as shown in details.
14. Splice loop conductors to lead-in-cable. Splices shall be soldered.
15. End of lead-in-cable and Type 2 loop conductor shall be waterproofed prior to installing in conduit to prevent moisture from entering the cable.
16. Lead-in-cable shall not be spliced between the pull box and the controller cabinet terminals.
17. Test each loop circuit for continuity, circuit resistance and insulation resistance at the controller cabinet location.
18. Where loop conductors are not to be spliced to a lead-in-cable, the ends of the conductors shall be taped and waterproofed with electrical insulating coating.

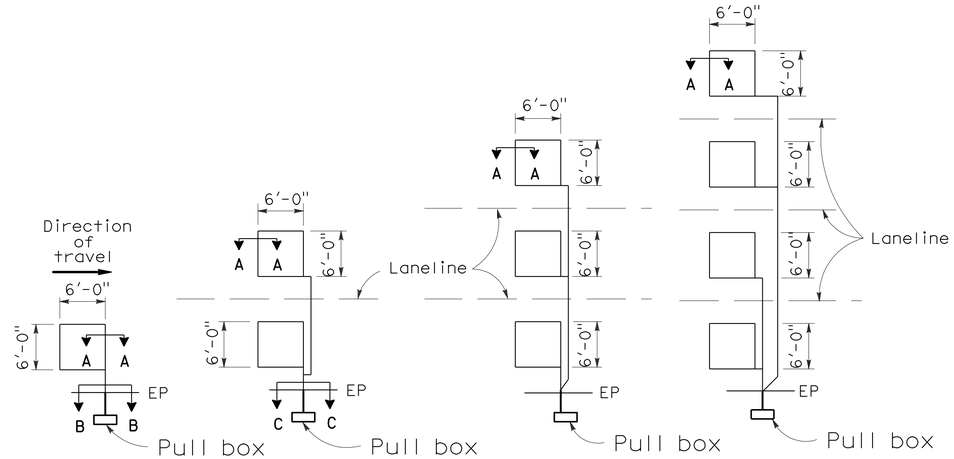

TYPE 1A INSTALLATION | TYPE 2A INSTALLATION | TYPE 3A INSTALLATION | TYPE 4A INSTALLATION

SAWCUT DETAILS

(Type A loop detector configurations illustrated)

1. 1A thru 4A = 1 Type A loop configuration in each lane.
2. 1B thru 4B = 1 Type B loop configuration in each lane.
3. 1C = 1 Type C loop configuration entering lanes as required.
4. 1D thru 4D = 1 Type D loop configuration in each lane.
5. 1E thru 4E = 1 Type E loop configuration in each lane.
6. 1Q thru 4Q = 1 Type Q loop configuration in each lane. (Use Type A, B, C, D, E or Q loop detector configurations only when specified or shown on plans)

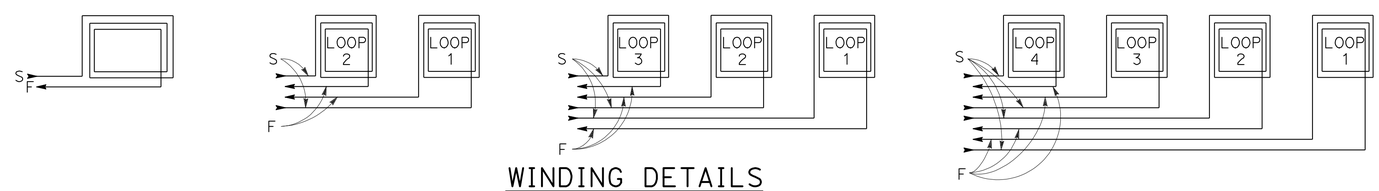

WINDING DETAILS

See Notes 6 and 7

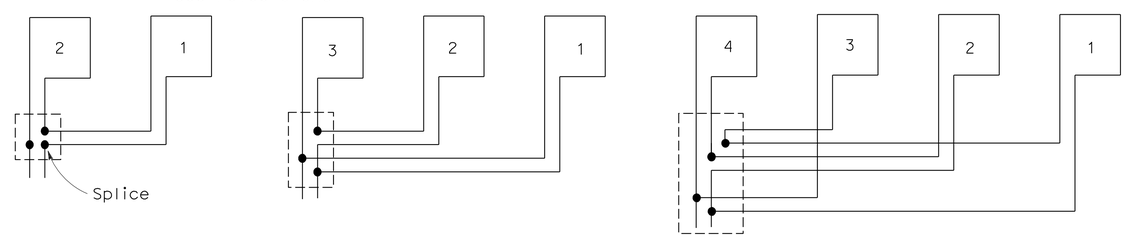

TYPICAL LOOP CONNECTIONS

(Dashed lines represent the pull box)

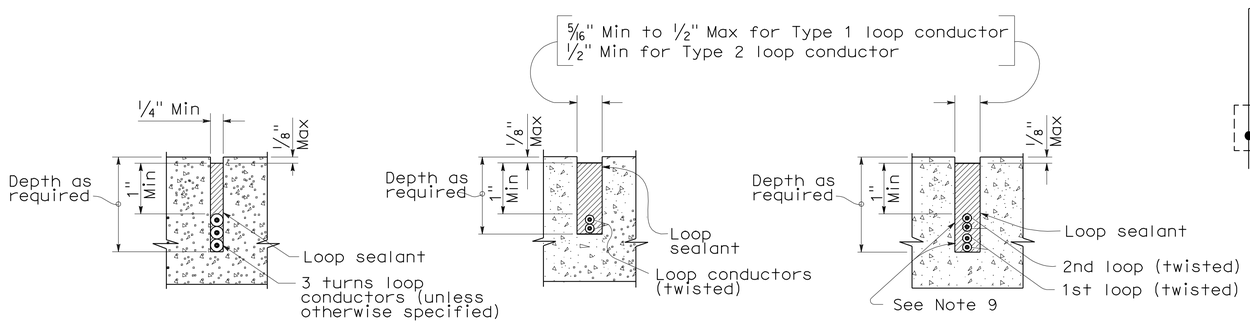

SECTION A-A | SECTION B-B | SECTION C-C

SLOT DETAILS - TYPE 1 AND TYPE 2 LOOP CONDUCTOR

STATE OF CALIFORNIA
DEPARTMENT OF TRANSPORTATION

ELECTRICAL SYSTEMS (DETECTORS)

NO SCALE

RSP ES-5A DATED OCTOBER 5, 2007 SUPERCEDES STANDARD PLAN ES-5A DATED MAY 1, 2006 - PAGE 423 OF THE STANDARD PLANS BOOK DATED MAY 2006.

REVISED STANDARD PLAN RSP ES-5A

2006 REVISED STANDARD PLAN RSP ES-5A

DIST	COUNTY	ROUTE	POST MILES TOTAL PROJECT	SHEET NO.	TOTAL SHEETS
11	SD	54,805	1.8,5.5/9.4	514	635

REGISTERED CIVIL ENGINEER

October 5, 2007
PLANS APPROVAL DATE

REGISTERED PROFESSIONAL ENGINEER
Stanley P. Johnson
No. C57793
Exp. 3-31-08
CIVIL
STATE OF CALIFORNIA

The State of California or its officers or agents shall not be responsible for the accuracy or completeness of electronic copies of this plan sheet.

To accompany plans dated 12-5-11

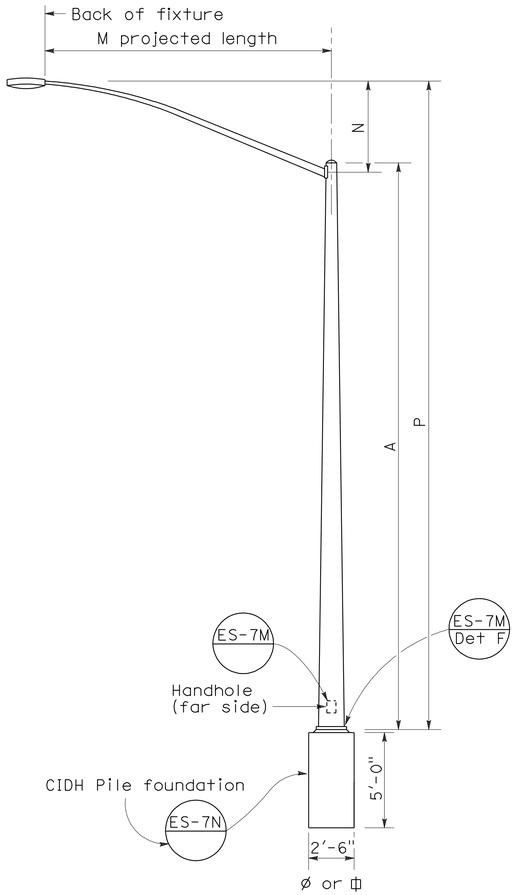

ELEVATION
TYPE 15 AND TYPE 21

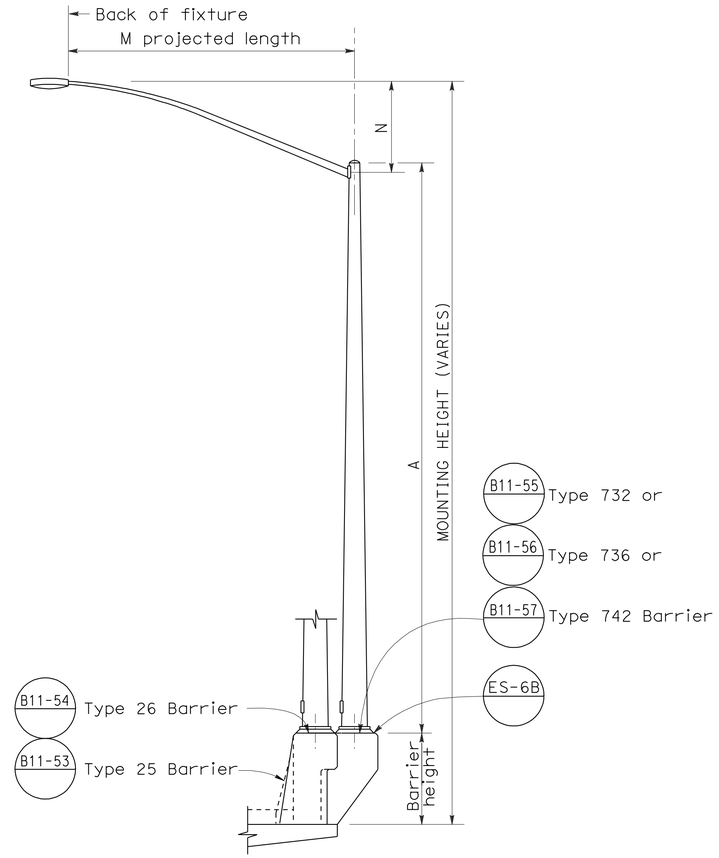

ELEVATION
TYPE 15 AND TYPE 21 BARRIER RAIL MOUNTED

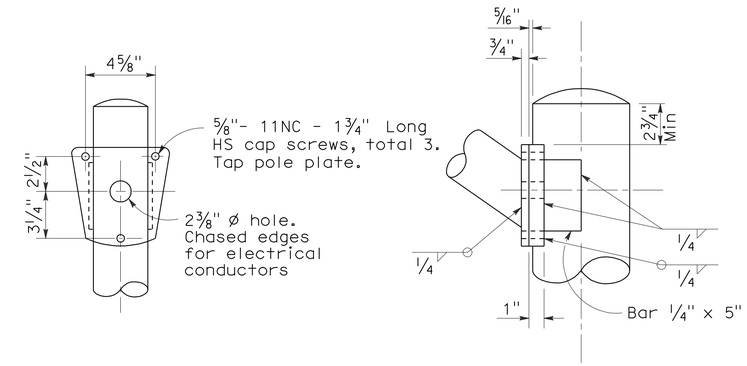

DETAIL R
LUMINAIRE ARM CONNECTION

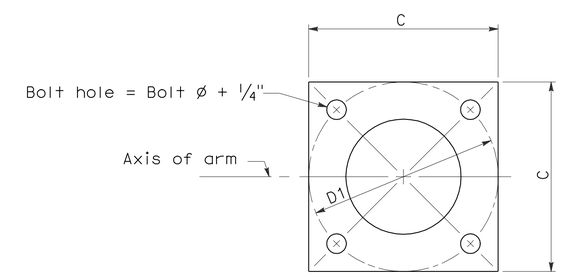

BASE PLATE

POLE TYPE	POLE DATA				BASE PLATE DATA				LUMINAIRE ARM
	A Height	Min OD Base	Min OD Top	Wall Thickness	C	D1 Bolt Circle	Thick-ness	Anchor Bolts Size	
15	30'	8"	3 7/8"	0.1196"	1'-0"	1'-0"	1"	1" ø x 3'-0" x 4"*	6' - 15' [12']
21	35'	8 5/8"	3 7/8"	0.1196"	1'-0"	1'-0"	1"	1 1/4"ø x 3'-0" x 4"*	6' - 15' [12']

* For barrier rail bolts, see Standard Plan ES-6B.

LUMINAIRE ARM DATA					
M Projected Length	N Rise	Min OD At Pole	Nominal Thickness	P Type 15	P Type 21
6'-0"	2'-0"±	3 1/4"	0.1196"	31'-6"±	36'-6"±
8'-0"	2'-6"±	3 1/2"	0.1196"	32'-0"±	37'-0"±
10'-0"	3'-3"±	3 7/8"	0.1196"	32'-9"±	37'-9"±
12'-0"	4'-3"±	3 7/8"	0.1196"	33'-9"±	38'-9"±
15'-0"	4'-9"±	4 1/4"	0.1196"	34'-3"±	39'-3"±

NOTES:

1. ☐ Indicates arm length to be used unless otherwise noted on the plans.
2. For Type 15-SB, use Type 15 standard with Type 30 slip base plate details, see Standard Plan ES-6F.
3. For additional notes, see Standard Plan ES-7M and ES-7N.

STATE OF CALIFORNIA
DEPARTMENT OF TRANSPORTATION

ELECTRICAL SYSTEMS (LIGHTING STANDARD TYPES 15 AND 21)

NO SCALE

RSP ES-6A DATED OCTOBER 5, 2007 SUPERCEDES STANDARD PLAN ES-6A DATED MAY 1, 2006 - PAGE 427 OF THE STANDARD PLANS BOOK DATED MAY 2006.

REVISED STANDARD PLAN RSP ES-6A

2006 REVISED STANDARD PLAN RSP ES-6A

7-10-07

DIST	COUNTY	ROUTE	POST MILES TOTAL PROJECT	SHEET NO.	TOTAL SHEETS
11	SD	54,805	1.8,5.5/9.4	515	635

REGISTERED ELECTRICAL ENGINEER

October 5, 2007
PLANS APPROVAL DATE

The State of California or its officers or agents shall not be responsible for the accuracy or completeness of electronic copies of this plan sheet.

REGISTERED PROFESSIONAL ENGINEER Jeffery G. McRae No. E14512 Exp. 6-30-08 ELECTRICAL STATE OF CALIFORNIA

To accompany plans dated 12-5-11

2006 REVISED STANDARD PLAN RSP ES-9C

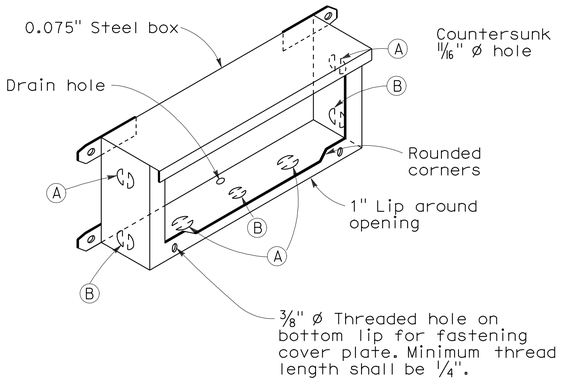

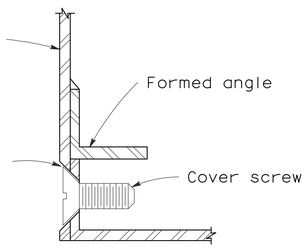

DETAIL J

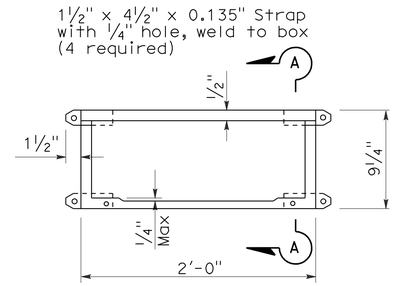

PLAN

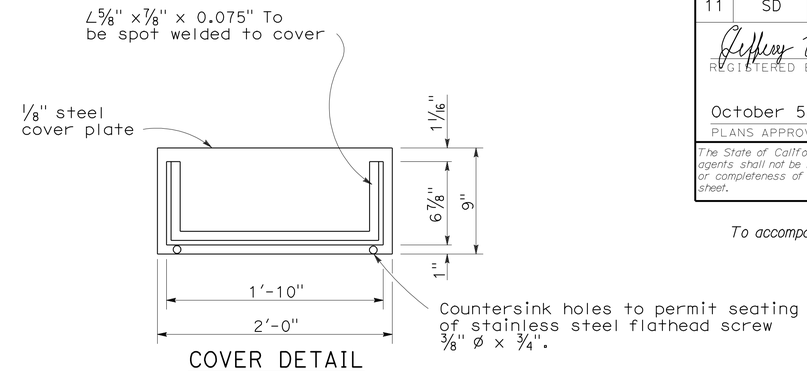

COVER DETAIL

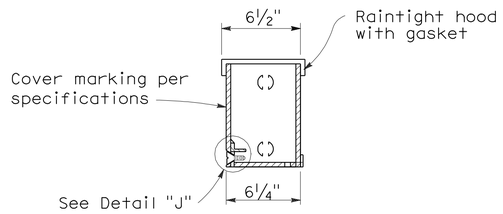

SECTION A-A

INSTALLATION NOTE:

Box shall be parallel to top of railing. Close cover box during pouring with 1/4" plywood of sufficient size to provide 1:1 chamfer on 3 sides of cover. Upper edge of plywood shall fit against lower edge of raintight hood.

No. 9 STRUCTURE PULL BOX

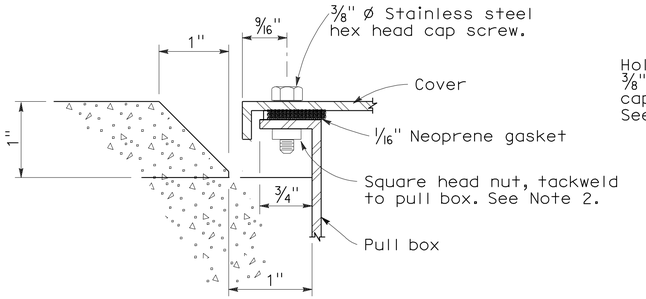

SECTION C-C

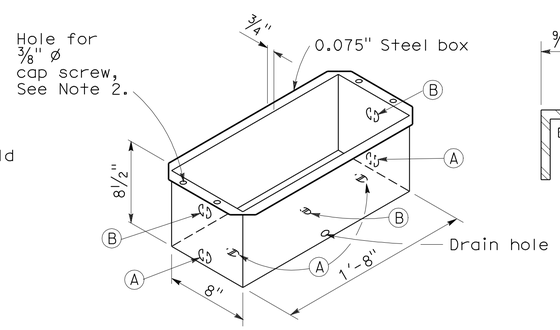

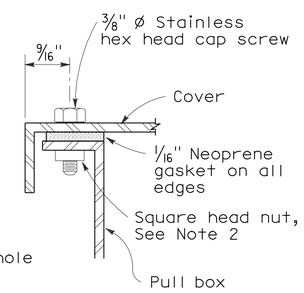

DETAIL A

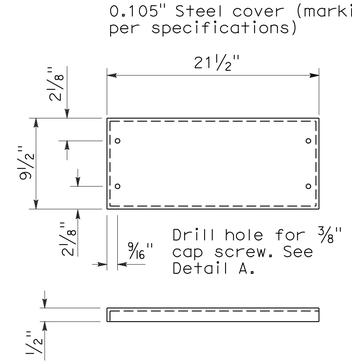

COVER DETAIL

NOTES: No. 9 and 9A Pull Box

1. Corner joints shall be lapped and secured by spot welding or riveting.
2. Where cap screws are used to attach cover to box, either of the following methods of providing adequate threading may be used:
   a. Tack weld square nut to bottom of flange (Total 4), or
   b. Tack weld a 1/4" x 5/8" x 8" bar beneath flange (Total 2).
3. Pound knockouts flat after punching.
4. Multiple size knockouts shall not be permitted.
5. Pull box covers shall be marked as shown on Standard Plan ES-8.

No. 9A STRUCTURE PULL BOX

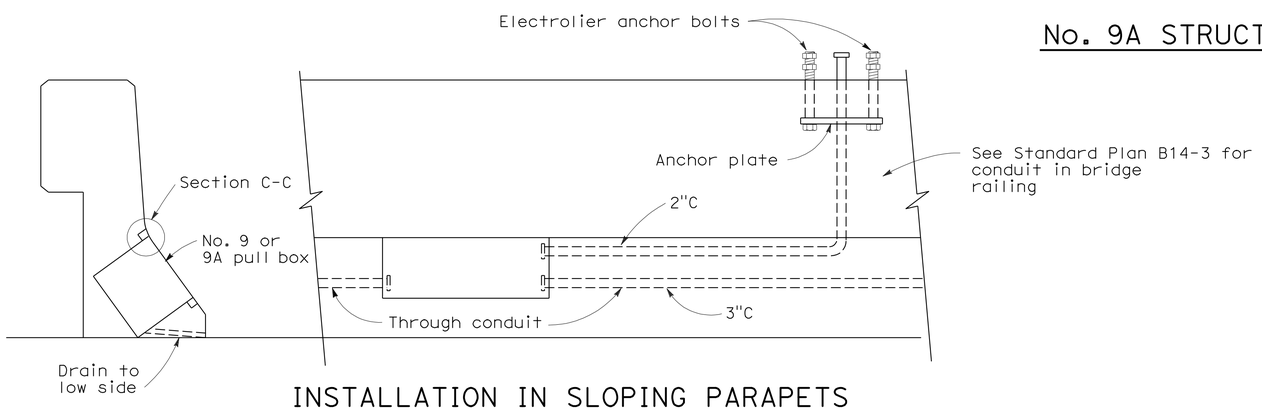

INSTALLATION IN SLOPING PARAPETS

For reinforcement in area of electrolier, see railing sheets. For electrolier anchor bolts, see Standard Plan ES-6B.

KNOCKOUT SCHEDULE
No. 9 AND 9A PULL BOX

(A) 2"C, 1 each end, 2 on bottom.

(B) 3"C, 1 each end, 1 on bottom.

STATE OF CALIFORNIA
DEPARTMENT OF TRANSPORTATION

ELECTRICAL SYSTEMS (ELECTRICAL DETAILS STRUCTURE INSTALLATIONS)

NO SCALE

RSP ES-9C DATED OCTOBER 5, 2007 SUPERCEDES STANDARD PLAN ES-9C DATED MAY 1, 2006 - PAGE 456 OF THE STANDARD PLANS BOOK DATED MAY 2006.

REVISED STANDARD PLAN RSP ES-9C

7-26-07

DIST	COUNTY	ROUTE	POST MILES TOTAL PROJECT	SHEET NO.	TOTAL SHEETS
11	SD	54,805	1.8,5.5/9.4	516	635

REGISTERED ELECTRICAL ENGINEER

October 5, 2007
PLANS APPROVAL DATE

REGISTERED PROFESSIONAL ENGINEER
Jeffery G. McRae
No. E14512
Exp. 6-30-08
ELECTRICAL
STATE OF CALIFORNIA

The State of California or its officers or agents shall not be responsible for the accuracy or completeness of electronic copies of this plan sheet.

To accompany plans dated 12-5-11

NOTES: (FOR LIGHTING AND SIGN ILLUMINATION CONTROL)

1. The ballast voltages of lighting fixtures and luminaires shall match line service voltages.
2. Voltage rating of photoelectric controls shall conform to the service voltage indicated on the plans.
3. Terminal strip shall be provided for wiring to fixtures.
4. Type SC1A, SC2A, SC3A controls are similar to Types SC1, SC2 and SC3 controls respectively except test switch and wiring are not required.

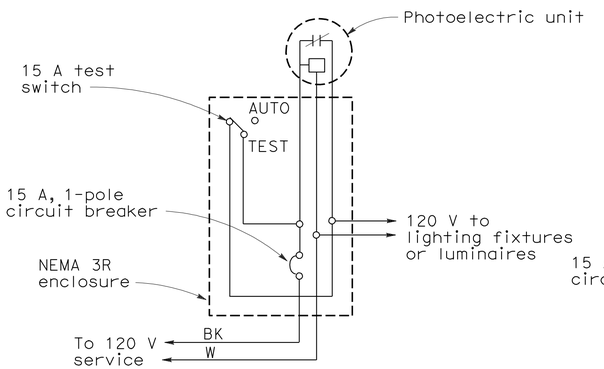

TYPE LC1 CONTROL

For 120 V unswitched circuit with no more than 800 W load.

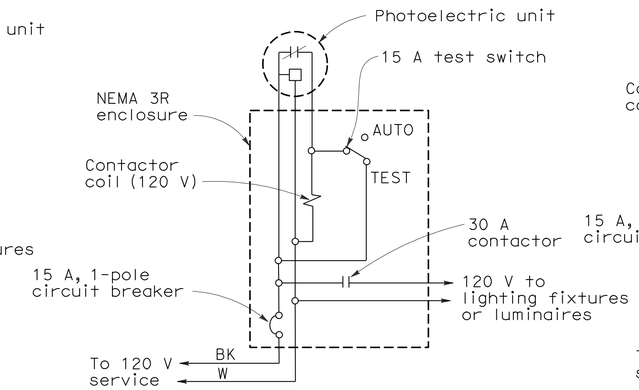

TYPE LC2 CONTROL

For 120 V unswitched circuit

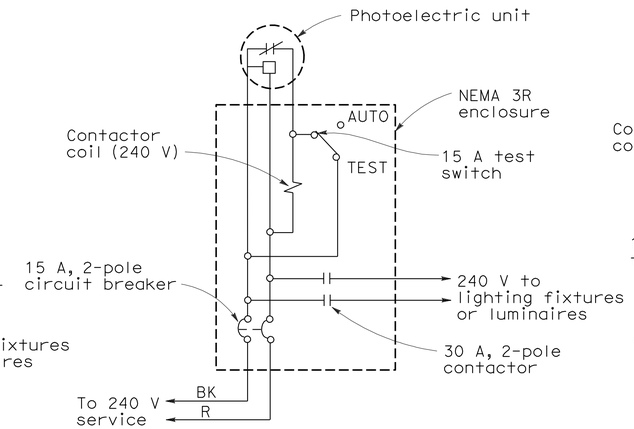

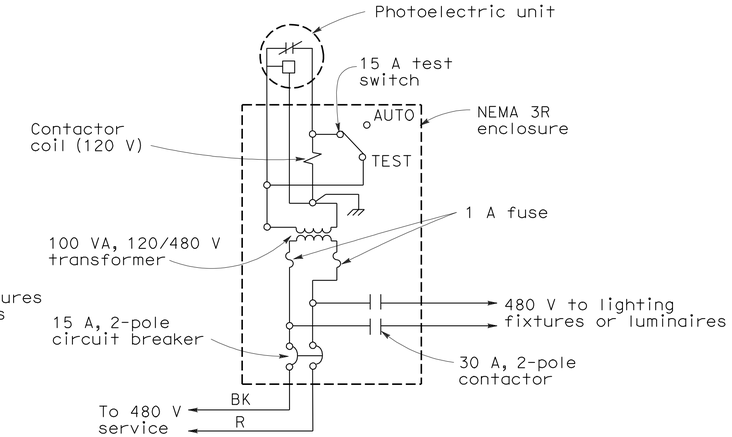

TYPE LC3 CONTROL

For 240 V and 480 V unswitched circuits

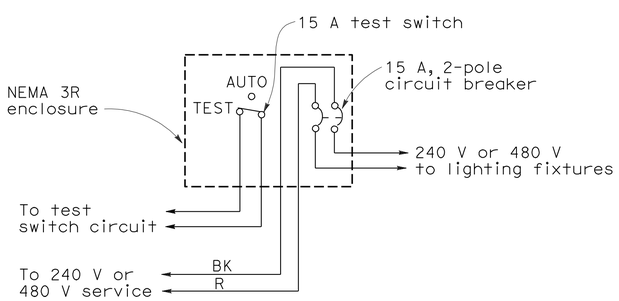

TYPE SC1 CONTROL

For 240 V or 480 V switched circuit, see Note 4 for Type SC1A

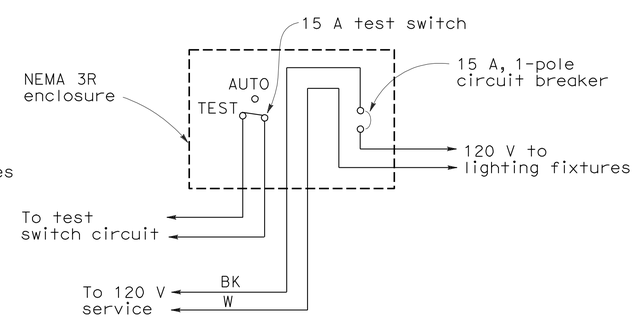

TYPE SC2 CONTROL

For 120 V switched circuit, see Note 4 for Type SC2A

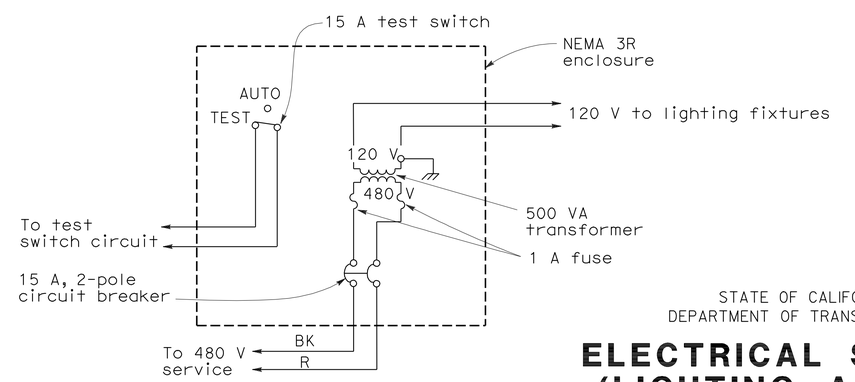

TYPE SC3 CONTROL

For 480 V switched sign circuit, see Note 4 for Type SC3A

STATE OF CALIFORNIA
DEPARTMENT OF TRANSPORTATION

ELECTRICAL SYSTEMS (LIGHTING AND SIGN ILLUMINATION CONTROL)

NO SCALE

RSP ES-15D DATED OCTOBER 5, 2007 SUPERCEDES STANDARD PLAN ES-15D DATED MAY 1, 2006 - PAGE 472 OF THE STANDARD PLANS BOOK DATED MAY 2006.

REVISED STANDARD PLAN RSP ES-15D

2006 REVISED STANDARD PLAN RSP ES-15D

9-10-07

DIST	COUNTY	ROUTE	POST MILES TOTAL PROJECT	SHEET No.	TOTAL SHEETS
11	SD	54,805	1.8,5.5/9.4	517	635

REGISTERED CIVIL ENGINEER — DATE 8-25-11

12-5-11
PLANS APPROVAL DATE

REGISTERED PROFESSIONAL ENGINEER — TONY SKRESLET No. C50676 Exp. 09-30-11 CIVIL — STATE OF CALIFORNIA

The State of California or its officers or agents shall not be responsible for the accuracy or completeness of electronic copies of this plan sheet.

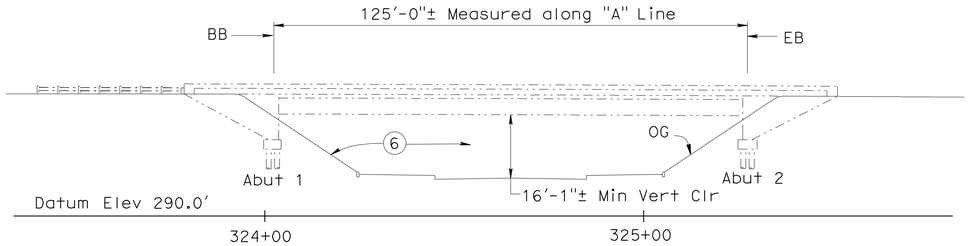

ELEVATION
1'=20'-0"

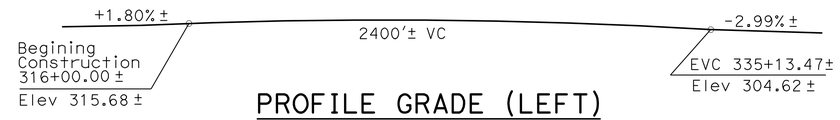

PROFILE GRADE (LEFT)
No Scale

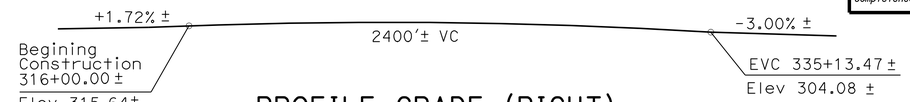

PROFILE GRADE (RIGHT)
No Scale

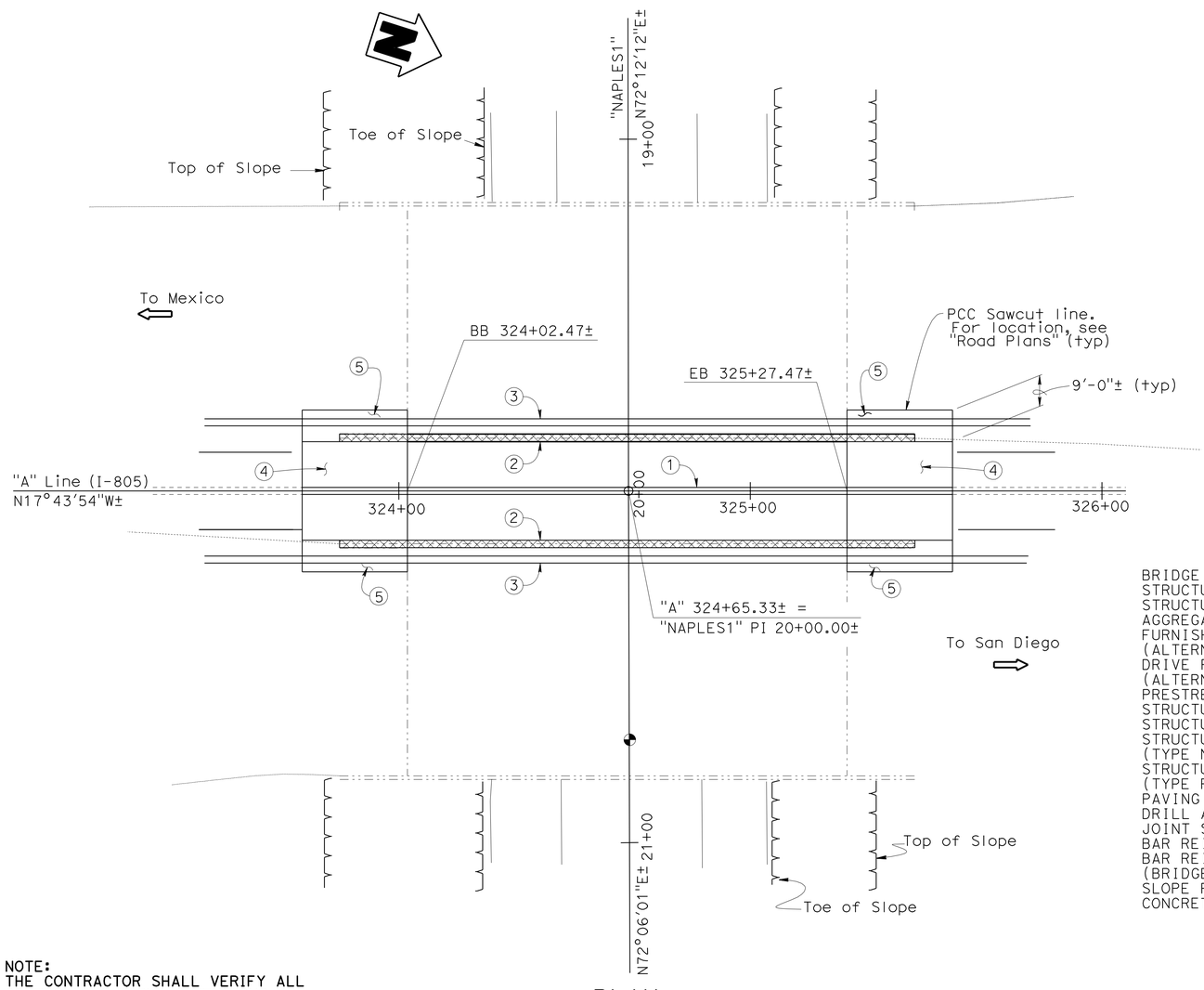

PLAN
1'=20'-0"

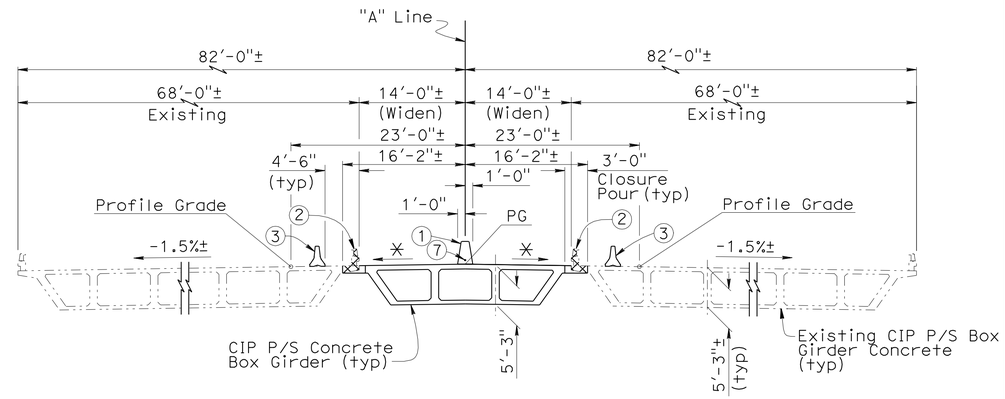

TYPICAL SECTION
1'=10'-0"

QUANTITIES

BRIDGE REMOVAL (PORTION), LOCATION A	LUMP	SUM
STRUCTURE EXCAVATION (BRIDGE)	68	CY
STRUCTURE BACKFILL (BRIDGE)	54	CY
AGGREGATE BASE (APPROACH SLAB)	4	CY
FURNISH PILING (CLASS 200) (ALTERNATIVE W)	400	LF
DRIVE PILE (CLASS 200) (ALTERNATIVE W)	12	EA
PRESTRESSING CAST-IN-PLACE CONCRETE	LUMP	SUM
STRUCTURAL CONCRETE, BRIDGE FOOTING	14	CY
STRUCTURAL CONCRETE, BRIDGE	300	CY
STRUCTURAL CONCRETE, APPROACH SLAB (TYPE N)	72	CY
STRUCTURAL CONCRETE, APPROACH SLAB (TYPE R)	40	CY
PAVING NOTCH EXTENSION	27	CF
DRILL AND BOND DOWEL	20	LF
JOINT SEAL (MR 1½")	101	LF
BAR REINFORCING STEEL (BRIDGE)	70,434	LB
BAR REINFORCING STEEL (EPOXY COATED) (BRIDGE)	433	LB
SLOPE PAVING (MASONRY BLOCK)	7,216	SQFT
CONCRETE BARRIER (TYPE 60A)	185	LF

NOTES:

1. Concrete Barrier (Type 60A)
2. Remove existing Barrier Railing (Type 9), portion of Overhang and portion of Abutment. All structural metal to be salvaged
3. Temporary Railing (Type K), see "Road Plans"
4. Structure Approach Type N(30D)
5. Structure Approach Type R(30D)
6. Remove and replace Existing Slope Paving
7. 2" ø Electrical Conduit, see "Road Plans"

✳ Match existing Grade and Cross Slope

LEGEND:

- Indicates Existing Structure
- Indicates Bridge removal (portion)
- Indicates direction of traffic
- Point of Minimum Vertical Clearance

NOTE:
THE CONTRACTOR SHALL VERIFY ALL CONTROLLING FIELD DIMENSIONS BEFORE ORDERING OR FABRICATING ANY MATERIAL.

DESIGN ENGINEER

	BY	CHECKED
DESIGN	P. A. Peterson	J. M. Peterson
DETAILS	T. Nguyen	J. M. Peterson
QUANTITIES	P. A. Peterson	J. M. Peterson

LOAD & RESISTANCE FACTOR DESIGN — LIVE LOADING: HL93 W/"LOW-BOY"; PERMIT DESIGN VEHICLE

LAYOUT: P. A. Peterson — CHECKED: J. M. Peterson
SPECIFICATIONS: R. Franti — PLANS AND SPECS COMPARED X

ORIGINAL SCALE IN INCHES FOR REDUCED PLANS 0 1 2 3

STATE OF CALIFORNIA
DEPARTMENT OF TRANSPORTATION

DIVISION OF ENGINEERING SERVICES
STRUCTURE DESIGN
DESIGN BRANCH 14

BRIDGE NO. 57-0634
POST MILE 5.54

NAPLES STREET UC (WIDEN)
GENERAL PLAN

UNIT: 3613
PROJECT NUMBER & PHASE: 11000200501
CONTRACT NO.: 11-2T1811

DISREGARD PRINTS BEARING EARLIER REVISION DATES
REVISION DATES: 10-21-11 08-24-11 08-24-11 10-21-11
SHEET 1 OF 16

USERNAME => s124936 DATE PLOTTED => 09-DEC-2011 TIME PLOTTED => 09:21

STRUCTURES DESIGN GENERAL PLAN SHEET (ENGLISH) (REV.09-01-10)

FILE => a_57-0634-a-gp.dgn

DIST	COUNTY	ROUTE	POST MILES TOTAL PROJECT	SHEET No.	TOTAL SHEETS
11	SD	54,805	1.8,5.5/9.4	518	635

Tony Skreslet 8-25-11
REGISTERED CIVIL ENGINEER DATE

12-5-11
PLANS APPROVAL DATE

REGISTERED PROFESSIONAL ENGINEER
TONY SKRESLET
No. C50676
Exp. 09-30-11
CIVIL
STATE OF CALIFORNIA

The State of California or its officers or agents shall not be responsible for the accuracy or completeness of electronic copies of this plan sheet.

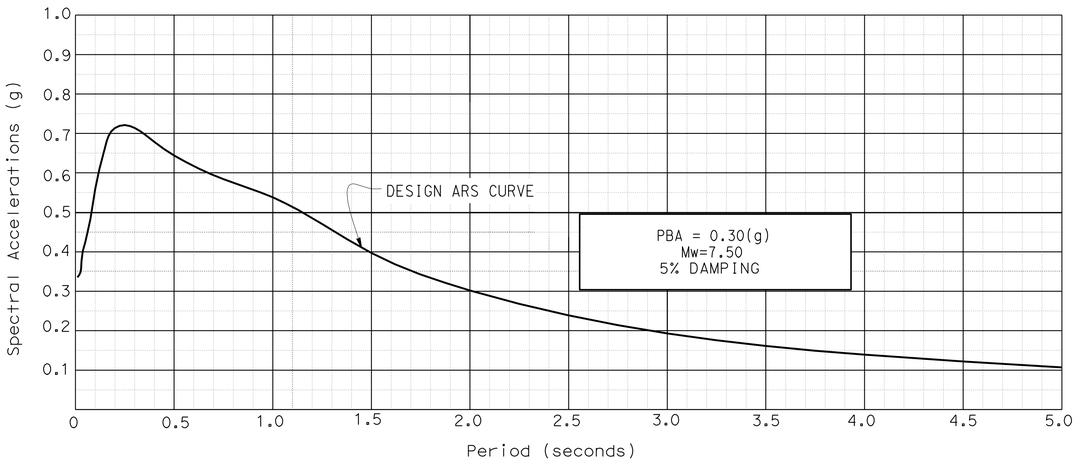

SITE SPECIFIC ACCELERATION RESPONSE SPECTRA

Structural Concrete, Bridge (5.0 Ksi at 28 days)

Structural Concrete, Bridge Footing (3.6 Ksi at 28 days)

CONCRETE STRENGTH AND TYPE LIMITS

No Scale

GENERAL NOTES
LOAD AND RESISTANCE FACTOR DESIGN

DESIGN: AASHTO LRFD BRIDGE DESIGN SPECIFICATIONS (4rd edition 2007 and California Amendments December 2008 and September 2010).

SEISMIC DESIGN: CALTRANS SEISMIC DESIGN CRITERIA (SDC) Version 1.5 September 2009

DEAD LOAD: Includes 35 psf for future wearing surface.

LIVE LOADING: HL93 with "Low-Boy" and Permit Design Vehicle.

SEISMIC LOADING: See "Site Specific Acceleration Response Spectra"

REINFORCED CONCRETE: f_y = 60 Ksi
f'_c = See "Concrete Strength and Type Limits."

PRESTRESSED CONCRETE: See "Prestressing Notes" on "Girder Layout" sheet.

NOTE:
THE CONTRACTOR SHALL VERIFY ALL CONTROLLING FIELD DIMENSIONS BEFORE ORDERING OR FABRICATING ANY MATERIAL.

INDEX TO PLANS

SHEET NO.	TITLE
1	GENERAL PLAN
2	INDEX TO PLANS
3	FOUNDATION PLAN
4	ABUTMENT LAYOUT
5	TYPICAL SECTION
6	GIRDER LAYOUT
7	ADDITIONAL REINFORCEMENT
8	SLOPE PAVING (MASONRY BLOCK)
9	STRUCTURE APPROACH TYPE N(30D)
10	STRUCTURE APPROACH TYPE R(30D)
11	STRUCTURE APPROACH DRAINAGE DETAILS
12	LOG OF TEST BORINGS 1 OF 5
13	LOG OF TEST BORINGS 2 OF 5
14	LOG OF TEST BORINGS 3 OF 5
15	LOG OF TEST BORINGS 4 OF 5
16	LOG OF TEST BORINGS 5 OF 5

STANDARD PLANS DATED MAY 2006

A10A	ABBREVIATIONS
A62C	LIMITS OF PAYMENT FOR EXCAVATION AND BACKFILL BRIDGE
A76A	CONCRETE BARRIER TYPE 60
B0-1	BRIDGE DETAILS
B0-3	BRIDGE DETAILS
B0-5	BRIDGE DETAILS
B0-13	BRIDGE DETAILS
B2-8	PILE DETAILS CLASS 200
B6-21	JOINT SEALS (MAXIMUM MOVEMENT RATING = 2)
B7-1	BOX GIRDER DETAILS
B8-5	CAST-IN-PLACE PRESTRESSED GIRDER DETAILS

STANDARD PLAN SHEET NO.

DETAIL NO.

PILE DATA TABLE

LOCATION	PILE TYPE	NOMINAL RESISTANCE (Kips)		DESIGN TIP ELEVATION (Ft)	SPECIFIED TIP ELEVATION (Ft)	NOMINAL DRIVING RESISTANCE (Kips)
		Compression	Tension			
Abutment 1	Class 200 Alt. "W" (modified)	380	0	275.0 (a)	275.0	380
Abutment 2	Class 200 Alt. "W" (modified)	380	0	275.0 (a)	275.0	380

NOTES:

1. Design Tip controlled by (a) Compression
2. Class 200 Alt. "W" (Modified) Piles shall be closed ended. For details, see Standard Plan Sheet B2-5, PILE DETAILS CLASS 90 AND CLASS 140, Alternative "V"

	BY	CHECKED
DESIGN	P. A. Peterson	J. M. Peterson
DETAILS	T. Nguyen	J. M. Peterson
QUANTITIES	P. A. Peterson	J. M. Peterson

STATE OF CALIFORNIA
DEPARTMENT OF TRANSPORTATION

DIVISION OF ENGINEERING SERVICES
STRUCTURE DESIGN
DESIGN BRANCH 14

BRIDGE NO. 57-0634
POST MILE 5.54

NAPLES STREET UC (WIDEN)
INDEX TO PLANS

STRUCTURES DESIGN DETAIL SHEET (ENGLISH) (REV. 09-01-10)

ORIGINAL SCALE IN INCHES FOR REDUCED PLANS 0 1 2 3

UNIT: 3613
PROJECT NUMBER & PHASE: 11000200501
CONTRACT NO.: 11-2T1811

DISREGARD PRINTS BEARING EARLIER REVISION DATES

REVISION DATES: 08-24-11 10-12-11 08-01-11 08-09-11

SHEET 2 OF 16

NOTES:

1. Utilities are per district utility map, dated 5-7-2007. Locations are approximate.
2. Utilities are per district utility map, dated 4-5-2010. Locations are approximate.
3. The Contractor shall verify all controlling field dimensions before ordering or fabricating any material.

- Indicates Existing Footings
- Indicates bottom of Abutment Footing elevation
- Indicates Pipe Pile

DIST	COUNTY	ROUTE	POST MILES TOTAL PROJECT	SHEET No	TOTAL SHEETS
11	SD	54,805	1.8,5.5/9.4	519	635

Tony Skreslet 12-23-02
REGISTERED CIVIL ENGINEER DATE

12-5-11
PLANS APPROVAL DATE

REGISTERED PROFESSIONAL ENGINEER TONY SKRESLET No. C50676 Exp. 09-30-11 CIVIL STATE OF CALIFORNIA

The State of California or its officers or agents shall not be responsible for the accuracy or completeness of electronic copies of this plan sheet.

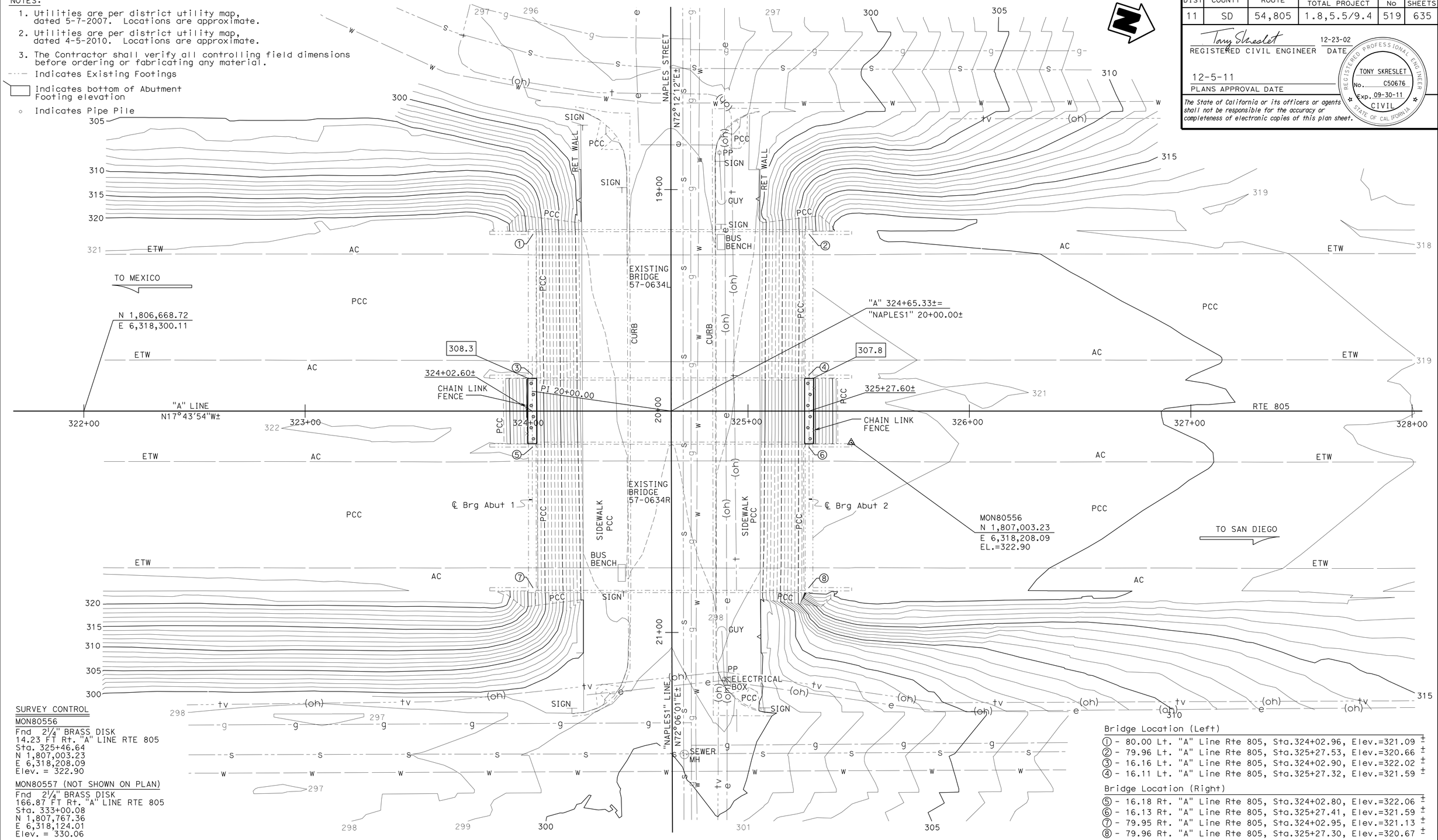

SURVEY CONTROL

MON80556
Fnd 2¼" BRASS DISK
14.23 FT Rt. "A" LINE RTE 805
Sta. 325+46.64
N 1,807,003.23
E 6,318,208.09
Elev. = 322.90

MON80557 (NOT SHOWN ON PLAN)
Fnd 2¼" BRASS DISK
166.87 FT Rt. "A" LINE RTE 805
Sta. 333+00.08
N 1,807,767.36
E 6,318,124.01
Elev. = 330.06

Bridge Location (Left)

① - 80.00 Lt. "A" Line Rte 805, Sta.324+02.96, Elev.=321.09 ±
② - 79.96 Lt. "A" Line Rte 805, Sta.325+27.53, Elev.=320.66 ±
③ - 16.16 Lt. "A" Line Rte 805, Sta.324+02.90, Elev.=322.02 ±
④ - 16.11 Lt. "A" Line Rte 805, Sta.325+27.32, Elev.=321.59 ±

Bridge Location (Right)

⑤ - 16.18 Rt. "A" Line Rte 805, Sta.324+02.80, Elev.=322.06 ±
⑥ - 16.13 Rt. "A" Line Rte 805, Sta.325+27.41, Elev.=321.59 ±
⑦ - 79.95 Rt. "A" Line Rte 805, Sta.324+02.95, Elev.=321.13 ±
⑧ - 79.96 Rt. "A" Line Rte 805, Sta.325+27.30, Elev.=320.67 ±

PRELIMINARY INVESTIGATION SECTION

SCALE	VERT.DATUM NAVD88	PHOTOGRAMMETRY AS OF: X			
1"=20'	HORZ.DATUM NAD83 (2007)	SURVEYED	BY District	CHECKED	BY J.Pallares 08/2010
ALIGNMENT TIES Dist. Traverse Sheet		DRAFTED	BY T.Zolnikov 08/2010	CHECKED	BY T.Schmalz 08/2010

	BY	CHECKED
DESIGN	P. A. Peterson	J. M. Peterson
DETAILS	T. Nguyen	J. M. Peterson
QUANTITIES	P. A. Peterson	J. M. Peterson

STATE OF CALIFORNIA
DEPARTMENT OF TRANSPORTATION

DIVISION OF ENGINEERING SERVICES
STRUCTURE DESIGN
DESIGN BRANCH 14

BRIDGE NO. 57-0634
POST MILE 5.54

NAPLES STREET UC (WIDEN)
FOUNDATION PLAN

STRUCTURES FOUNDATION PLAN SHEET (ENGLISH) (REV. 10/25/05)

ORIGINAL SCALE IN INCHES FOR REDUCED PLANS 0 1 2 3

CU 3613
PN & PHASE 111000200501

DISREGARD PRINTS BEARING EARLIER REVISION DATES

REVISION DATES: 08-17-10 11-29-10 01-06-11 01-24-11 02-22-11 03-23-11 03-24-11 04-12-11

SHEET 3 OF 16

FILE => a_57-0634-b-fp.dgn

USERNAME => s124436 DATE PLOTTED => 09-DEC-2011 TIME PLOTTED => 09:22

DIST	COUNTY	ROUTE	POST MILES TOTAL PROJECT	SHEET No.	TOTAL SHEETS
11	SD	54,805	1.8,5.5/9.4	520	635

REGISTERED CIVIL ENGINEER — DATE 8-25-11

12-5-11
PLANS APPROVAL DATE

REGISTERED PROFESSIONAL ENGINEER — TONY SKRESLET — No. C50676 — Exp. 09-30-11 — CIVIL — STATE OF CALIFORNIA

The State of California or its officers or agents shall not be responsible for the accuracy or completeness of electronic copies of this plan sheet.

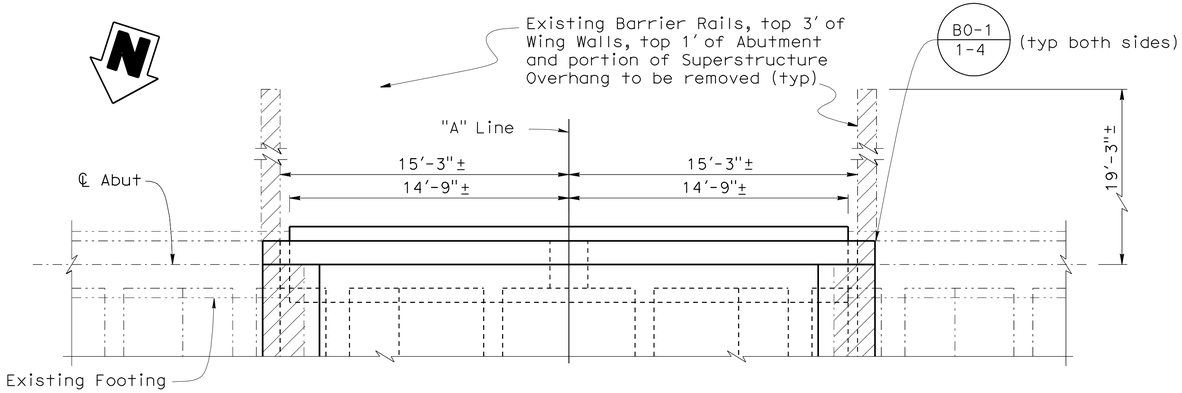

PLAN
1/4" = 1'-0"

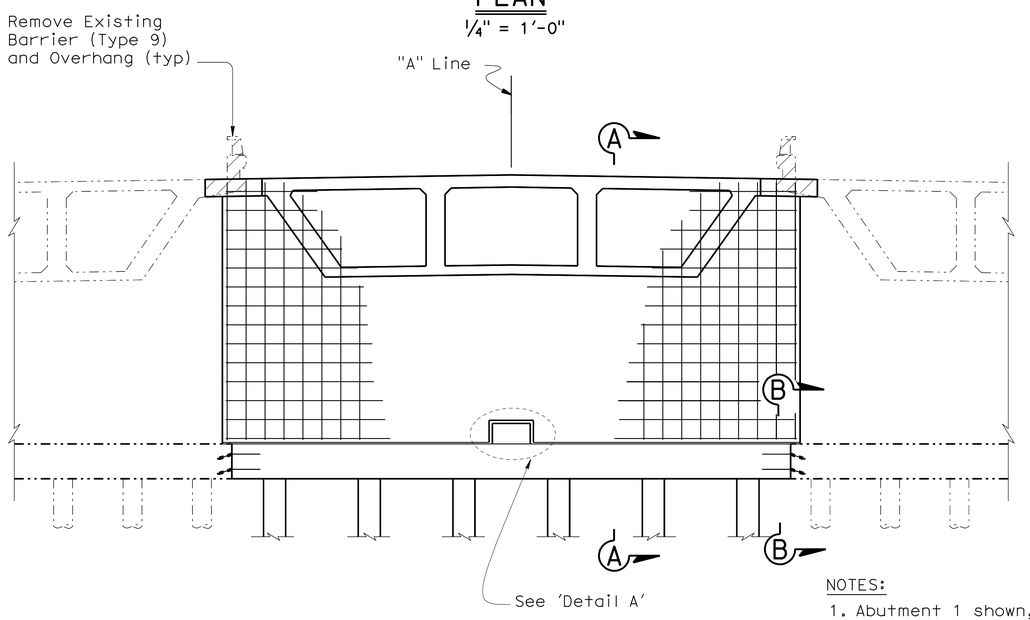

ELEVATION
1/4" = 1'-0"

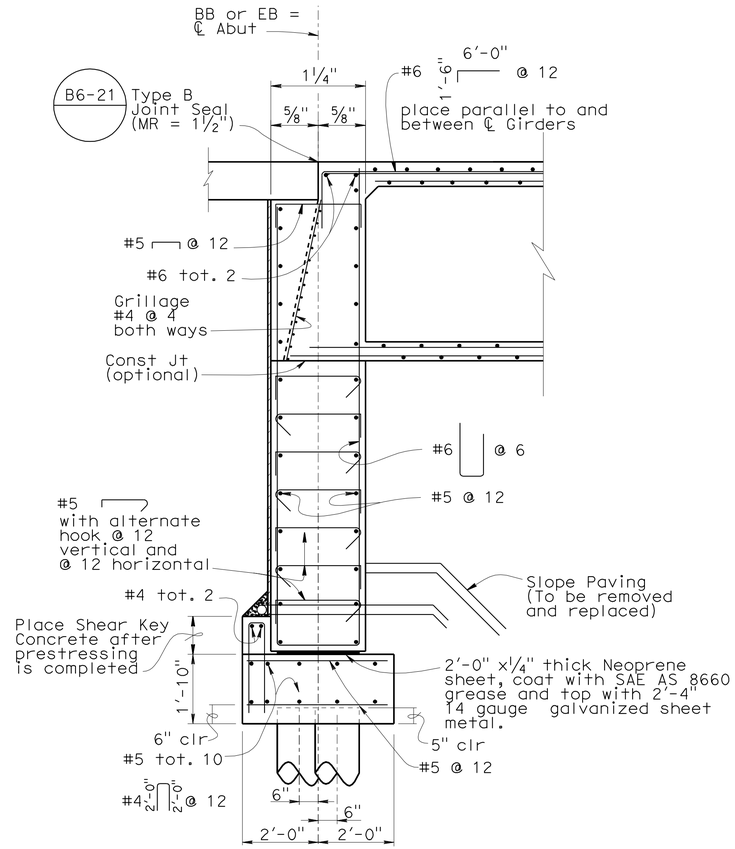

SECTION A-A
1/2" = 1'-0"

B6-21 B8-5

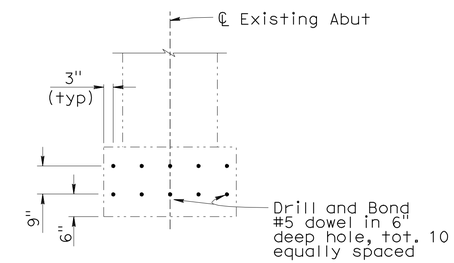

SECTION B-B
1/2" = 1'-0"

NOTES:

1. Abutment 1 shown, Abutment 2 similar.
2. Inside Face of new Abutment Stem Wall shall match Existing Stem Wall.
3. New Approach Slab and Barrier Rail not shown

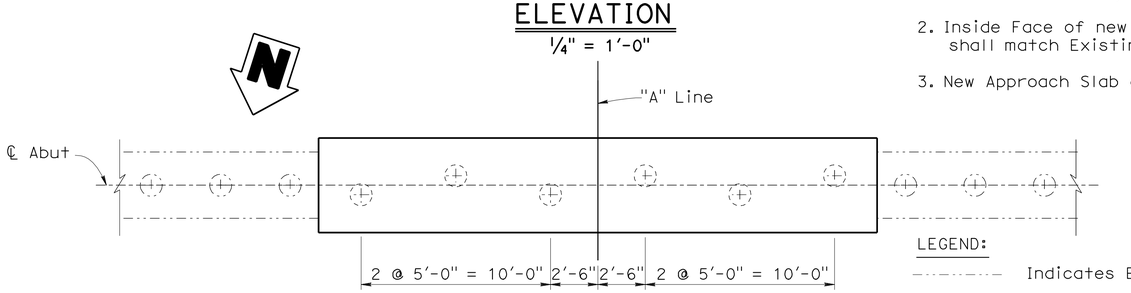

FOOTING PLAN
1/4" = 1'-0"

LEGEND:

- Indicates Existing Structure
- Indicates Pipe Pile
- Indicates Existing Pile
- Indicates portion of Existing Abutment and Superstructure to be removed

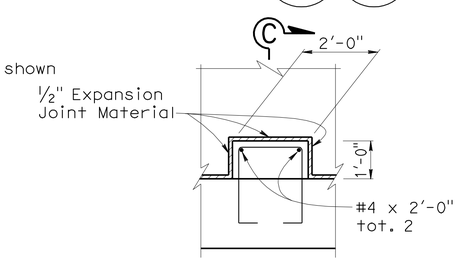

DETAIL A
1/2" = 1'-0"

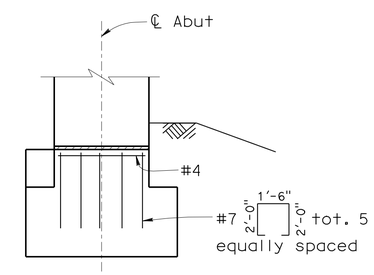

NOTE:
Reinforcement shown is in addition to that shown on 'Section A-A'.

SECTION C-C
1/2" = 1'-0"

NOTE:
THE CONTRACTOR SHALL VERIFY ALL CONTROLLING FIELD DIMENSIONS BEFORE ORDERING OR FABRICATING ANY MATERIAL.

	BY	CHECKED
DESIGN	P. A. Peterson	J. M. Peterson
DETAILS	T. Nguyen	J. M. Peterson
QUANTITIES	P. A. Peterson	J. M. Peterson

STATE OF CALIFORNIA
DEPARTMENT OF TRANSPORTATION

DIVISION OF ENGINEERING SERVICES
STRUCTURE DESIGN
DESIGN BRANCH 14

BRIDGE NO. 57-0634
POST MILE 5.54

NAPLES STREET UC (WIDEN)
ABUTMENT LAYOUT

STRUCTURES DESIGN DETAIL SHEET (ENGLISH) (REV. 09-01-10)

ORIGINAL SCALE IN INCHES FOR REDUCED PLANS 0 1 2 3

UNIT: 3613
PROJECT NUMBER & PHASE: 11000200501
CONTRACT NO.: 11-2T1811

DISREGARD PRINTS BEARING EARLIER REVISION DATES

REVISION DATES: 08-09-11 05-13-11 05-24-11 08-01-11

SHEET 4 OF 16

FILE => a_57-0634-f-abtlo.dgn

USERNAME => s124496 DATE PLOTTED => 09-DEC-2011 TIME PLOTTED => 09:22

DIST	COUNTY	ROUTE	POST MILES TOTAL PROJECT	SHEET No.	TOTAL SHEETS
11	SD	54,805	1.8,5.5/9.4	521	635

Tony Skreslet 8-25-11
REGISTERED CIVIL ENGINEER DATE

12-5-11
PLANS APPROVAL DATE

REGISTERED PROFESSIONAL ENGINEER TONY SKRESLET No. C50676 Exp. 09-30-11 CIVIL STATE OF CALIFORNIA

The State of California or its officers or agents shall not be responsible for the accuracy or completeness of electronic copies of this plan sheet.

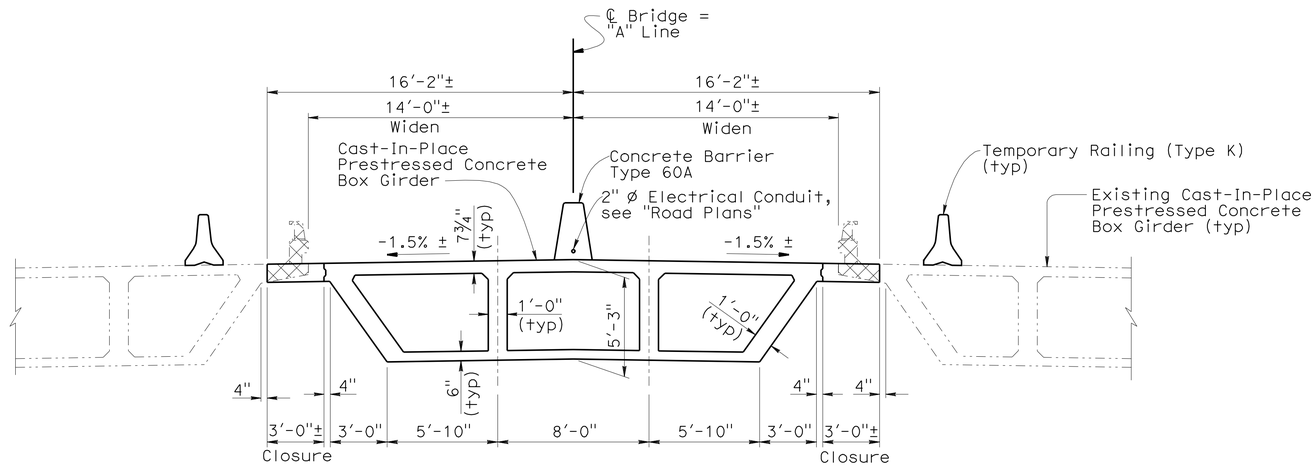

TYPICAL SECTION

¼" = 1'-0"

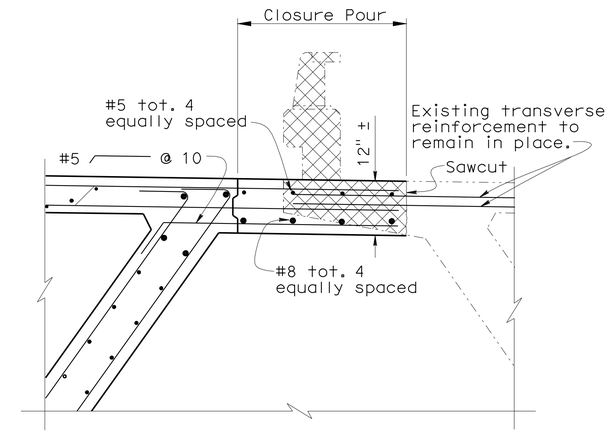

CLOSURE DETAIL

¾" = 1'-0"

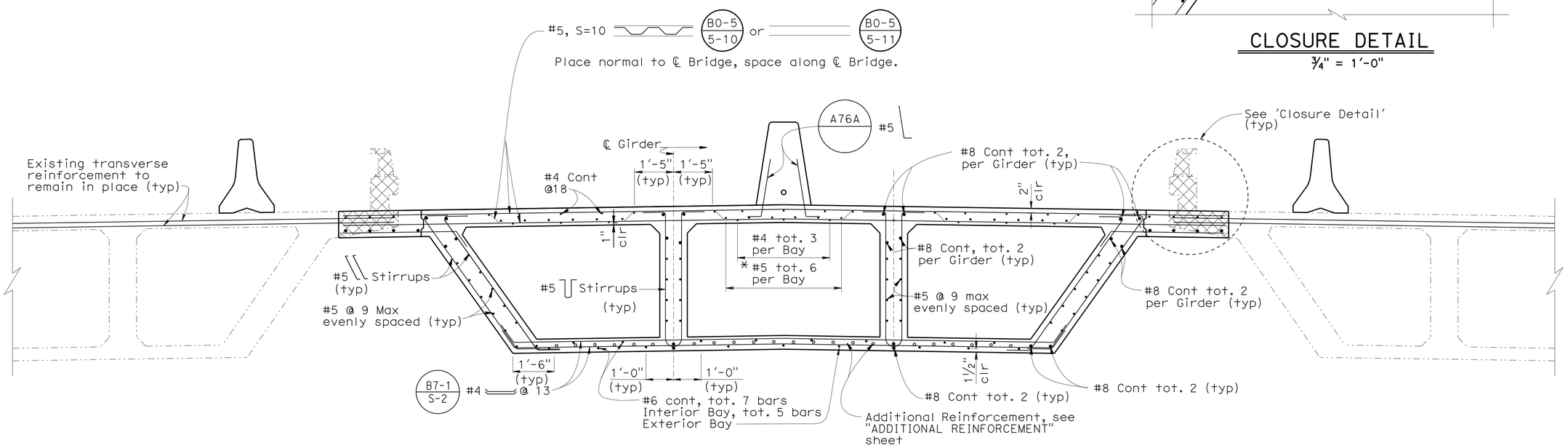

PART TYPICAL SECTION B8-5 B7-1 B0-5

½" = 1'-0"

LEGEND:

Indicates Concrete and Barrier Rail removal

NOTE:
THE CONTRACTOR SHALL VERIFY ALL CONTROLLING FIELD DIMENSIONS BEFORE ORDERING OR FABRICATING ANY MATERIAL.

	BY	CHECKED
DESIGN	P. A. Peterson	J. M. Peterson
DETAILS	T. Nguyen	J. M. Peterson
QUANTITIES	P. A. Peterson	J. M. Peterson

STATE OF CALIFORNIA
DEPARTMENT OF TRANSPORTATION

DIVISION OF ENGINEERING SERVICES
STRUCTURE DESIGN
DESIGN BRANCH 14

BRIDGE NO. 57-0634
POST MILE 5.54

NAPLES STREET UC (WIDEN)
TYPICAL SECTION

STRUCTURES DESIGN DETAIL SHEET (ENGLISH) (REV. 09-01-10)

ORIGINAL SCALE IN INCHES FOR REDUCED PLANS 0 1 2 3

UNIT: 3613
PROJECT NUMBER & PHASE: 11000200501
CONTRACT NO.: 11-2T1811

DISREGARD PRINTS BEARING EARLIER REVISION DATES

REVISION DATES: 05-24-11 06-03-11 08-01-11 08-24-11

SHEET 5 OF 16

FILE => a_57-0634-k-ts.dgn

USERNAME => s124496 DATE PLOTTED => 09-DEC-2011 TIME PLOTTED => 09:22

DIST	COUNTY	ROUTE	POST MILES TOTAL PROJECT	SHEET No.	TOTAL SHEETS
11	SD	54,805	1.8,5.5/9.4	522	635

Tony Skreslet 8-25-11
REGISTERED CIVIL ENGINEER DATE

12-5-11
PLANS APPROVAL DATE

REGISTERED PROFESSIONAL ENGINEER TONY SKRESLET No. C50676 Exp. 09-30-11 CIVIL STATE OF CALIFORNIA

The State of California or its officers or agents shall not be responsible for the accuracy or completeness of electronic copies of this plan sheet.

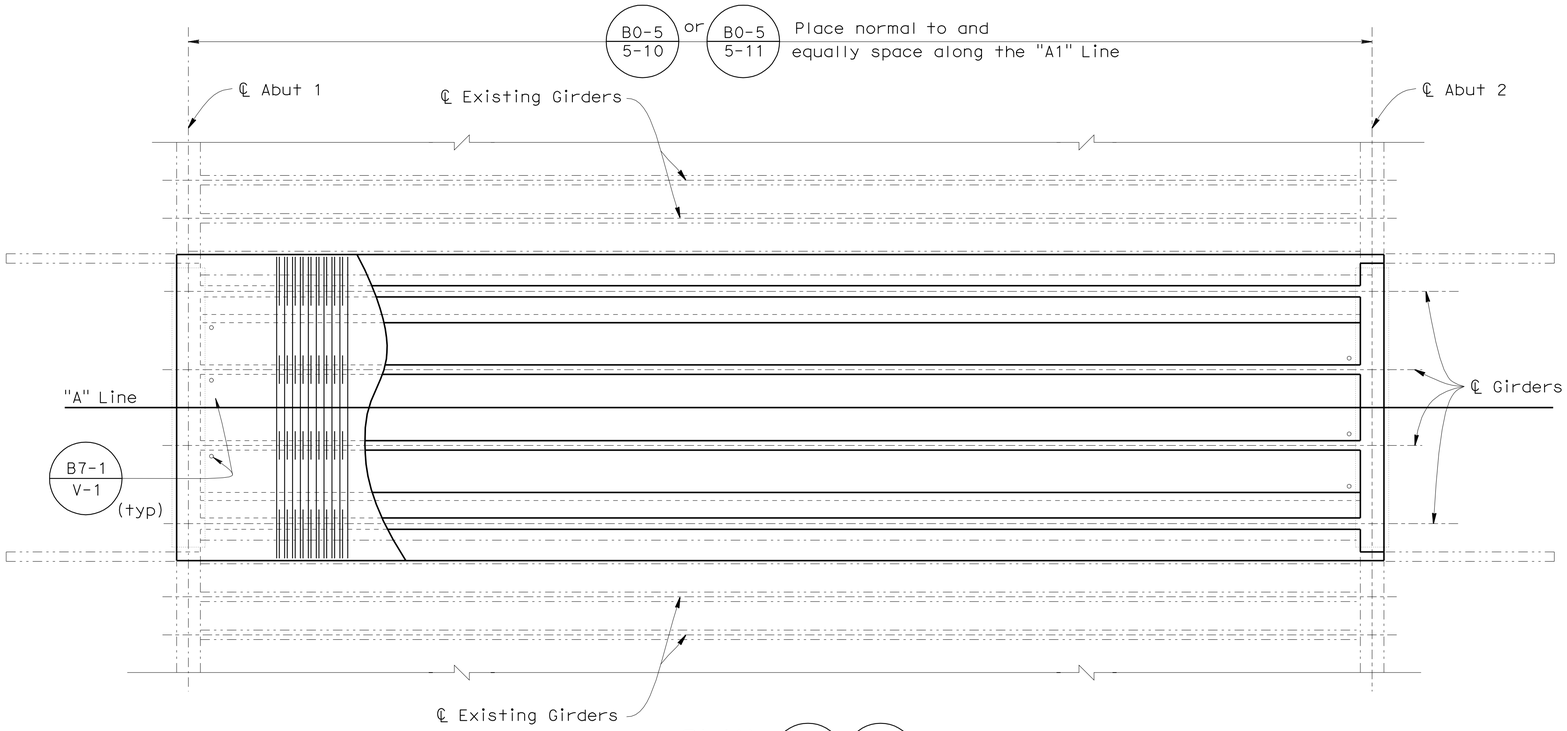

PLAN B7-1 B8-5
1/8" = 1'-0"

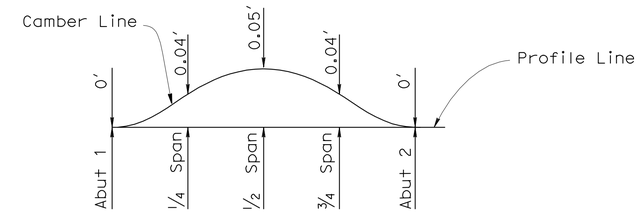

CAMBER DIAGRAM
No Scale

NOTE:
Does not include allowance for falsework settlement

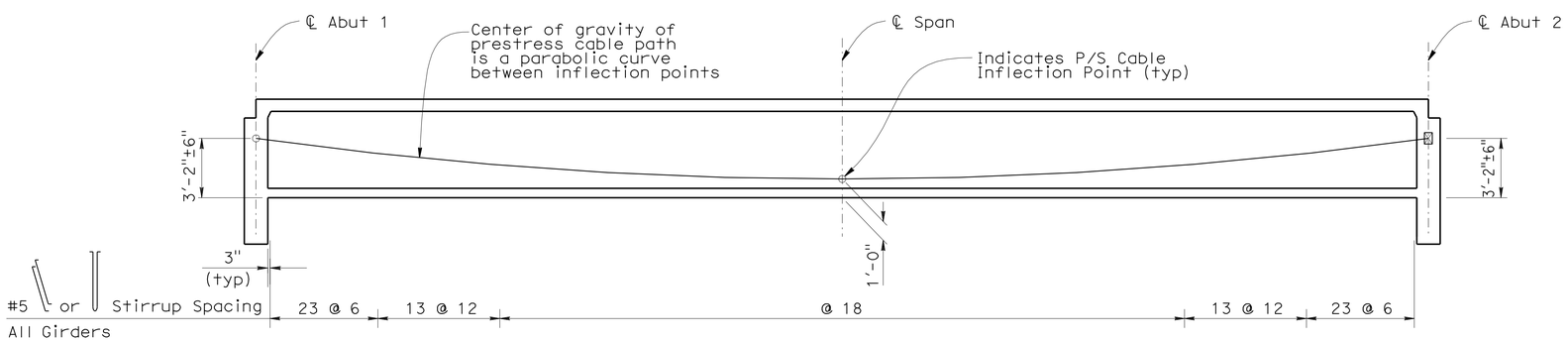

LONGITUDINAL SECTION B7-1
No scale

PRESTRESSING NOTES

270 Ksi Low Relaxation Strand:
P_{jack} = 8950 kips
Anchor Set = 3/8 in
Total Number of Girders = 4
Friction curvature coefficient μ = 15 X 10^{-2}(1/rad)
Friction wobble coefficient K = 2.0 X 10^{-4}(1/ft)
Distribution of prestress force (Pjack) between girders shall not exceed the ratio of 3:2.
Maximum final force variation between girders shall not exceed 125 kips.
Concrete: f'_c = 5.0 Ksi @ 28 days
f'_{ci} = 3.5 Ksi @ time of stressing
Contractor shall submit elongation calculations based on initial stress at
⊠ = 0.956 times jacking stress.
One end stressing shall be performed from either abutment

⊠ Indicates Theoretical Point of no movement

NOTE:
Concrete Barrier not shown.

NOTE:
THE CONTRACTOR SHALL VERIFY ALL CONTROLLING FIELD DIMENSIONS BEFORE ORDERING OR FABRICATING ANY MATERIAL.

	BY	CHECKED
DESIGN	P. A. Peterson	J. M. Peterson
DETAILS	T. Nguyen	J. M. Peterson
QUANTITIES	P. A. Peterson	J. M. Peterson

STATE OF CALIFORNIA
DEPARTMENT OF TRANSPORTATION

DIVISION OF ENGINEERING SERVICES
STRUCTURE DESIGN
DESIGN BRANCH 14

BRIDGE NO. 57-0634
POST MILE 5.54

NAPLES STREET UC (WIDEN)
GIRDER LAYOUT

STRUCTURES DESIGN DETAIL SHEET (ENGLISH) (REV. 09-01-10)

ORIGINAL SCALE IN INCHES FOR REDUCED PLANS 0 1 2 3

UNIT: 3613
PROJECT NUMBER & PHASE: 11000200501
CONTRACT NO.: 11-2T1811

DISREGARD PRINTS BEARING EARLIER REVISION DATES

REVISION DATES 03-22-11 04-13-11 05-26-11 06-03-11

SHEET 6 OF 16

FILE => a_57-0634-1-g_lo.dgn

USERNAME => s124496 DATE PLOTTED => 09-DEC-2011 TIME PLOTTED => 09:22

DIST	COUNTY	ROUTE	POST MILES TOTAL PROJECT	SHEET No.	TOTAL SHEETS
11	SD	54,805	1.8,5.5/9.4	523	635

Tony Skreslet 8-25-11
REGISTERED CIVIL ENGINEER DATE

12-5-11
PLANS APPROVAL DATE

REGISTERED PROFESSIONAL ENGINEER
TONY SKRESLET
No. C50676
Exp. 09-30-11
CIVIL
STATE OF CALIFORNIA

The State of California or its officers or agents shall not be responsible for the accuracy or completeness of electronic copies of this plan sheet.

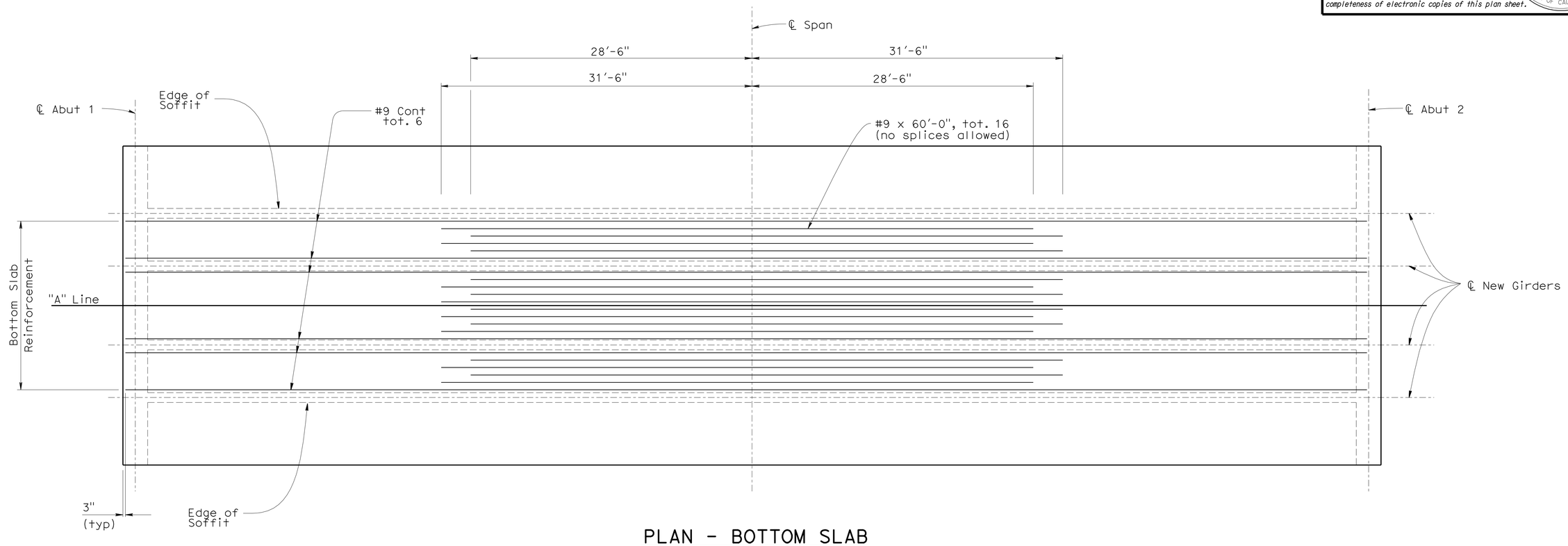

PLAN - BOTTOM SLAB

3/16" = 1'-0"

NOTES:

1. Bottom reinforcement shown shall be placed symmetrical about centerline of Bridge
2. All reinforcement shown on this sheet are #9 unless otherwise noted
3. All reinforcement shown is in addition to reinforcement shown on "TYPICAL SECTION" sheet
4. Only service splices allowed on continuous additional Girder reinforcement
5. No splices allowed on non-continuous additional Girder reinforcement

NOTE:
THE CONTRACTOR SHALL VERIFY ALL CONTROLLING FIELD DIMENSIONS BEFORE ORDERING OR FABRICATING ANY MATERIAL.

	BY	CHECKED
DESIGN	P. A. Peterson	J. M. Peterson
DETAILS	T. Nguyen	J. M. Peterson
QUANTITIES	P. A. Peterson	J. M. Peterson

STATE OF CALIFORNIA
DEPARTMENT OF TRANSPORTATION

DIVISION OF ENGINEERING SERVICES
STRUCTURE DESIGN
DESIGN BRANCH 14

BRIDGE NO. 57-0634
POST MILE 5.54

NAPLES STREET UC (WIDEN)
ADDITIONAL REINFORCEMENT

STRUCTURES DESIGN DETAIL SHEET (ENGLISH) (REV. 09-01-10)

ORIGINAL SCALE IN INCHES FOR REDUCED PLANS 0 1 2 3

UNIT: 3613
PROJECT NUMBER & PHASE: 11000200501
CONTRACT NO.: 11-2T1811

DISREGARD PRINTS BEARING EARLIER REVISION DATES

REVISION DATES: 03-24-11 03-25-11 04-12-11 02-03-11

SHEET 7 OF 16

FILE => o_57-0634-1-girdrein.dgn

USERNAME => s124496 DATE PLOTTED => 09-DEC-2011 TIME PLOTTED => 09:22

DIST	COUNTY	ROUTE	POST MILES TOTAL PROJECT	SHEET No.	TOTAL SHEETS
11	SD	54,805	1.8,5.5/9.4	524	635

Tony Skreslet 8-25-11
REGISTERED CIVIL ENGINEER DATE

12-5-11
PLANS APPROVAL DATE

REGISTERED PROFESSIONAL ENGINEER TONY SKRESLET No. C50676 Exp. 09-30-11 CIVIL STATE OF CALIFORNIA

The State of California or its officers or agents shall not be responsible for the accuracy or completeness of electronic copies of this plan sheet.

NOTE: Concrete Barrier not shown.

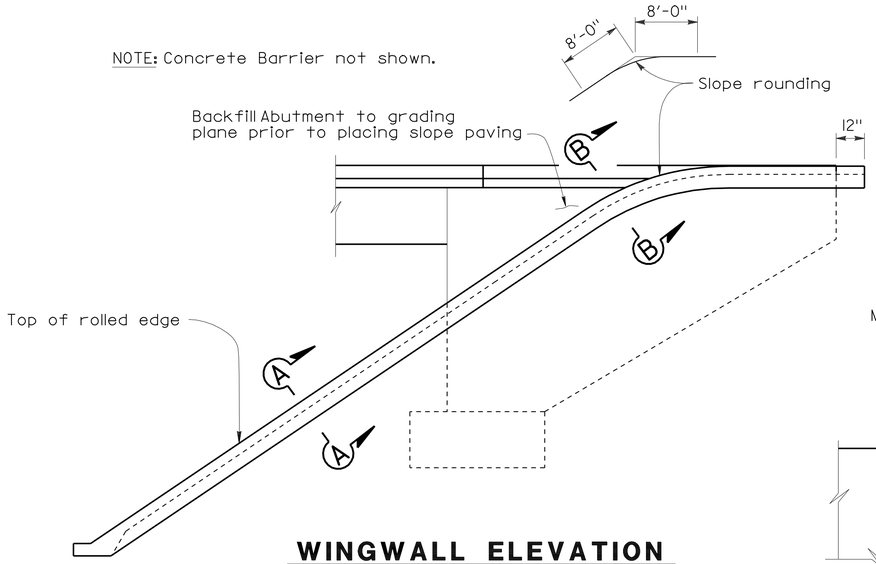

WINGWALL ELEVATION

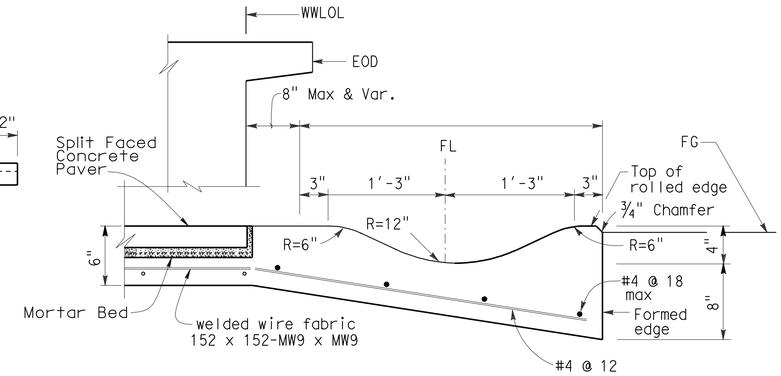

SECTION A-A

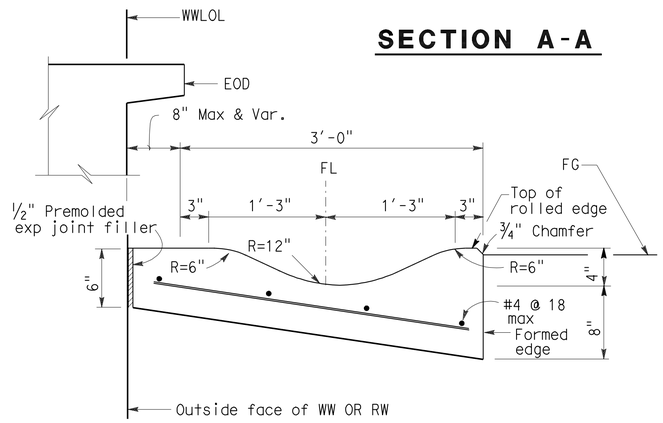

SECTION B-B

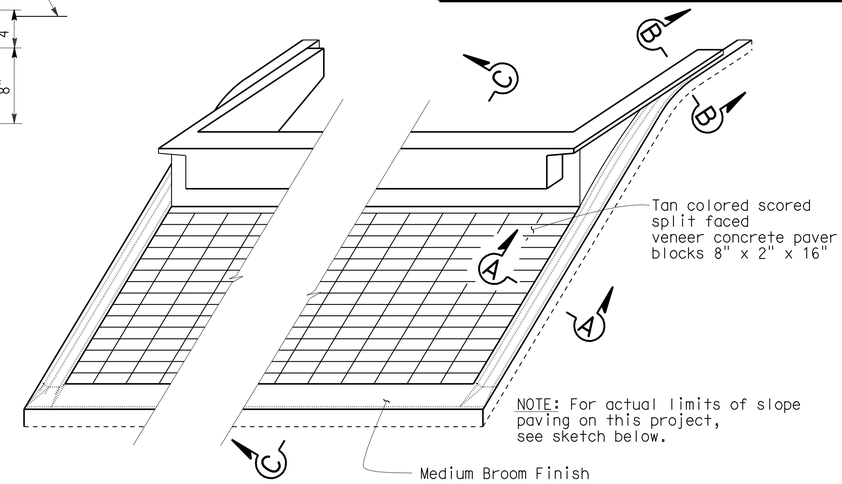

PICTORIAL VIEW OF TYPICAL INSTALLATION

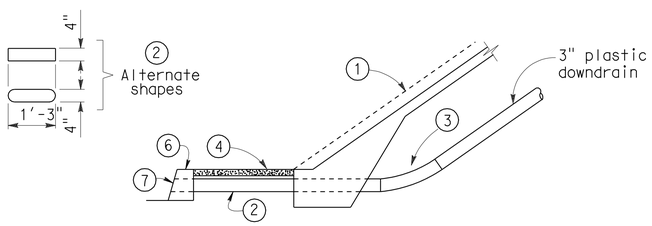

TYPICAL - WITH SIDEWALK

DRAINAGE DETAILS

NOTE: Drainage details are only applicable when B0-3/3-5 is indicated on detail sheets.

1. Top of rolled edge
2. Conduit: 1/16" galv corrugated steel or 1/8" smooth galv steel
3. Plastic pipe connector
4. Top of Sidewalk or Finish Grade
5. See Approach Slab drainage detail
6. Top of Curb
7. Core cut through Curb

NOTE:
THE CONTRACTOR SHALL VERIFY ALL CONTROLLING FIELD DIMENSIONS BEFORE ORDERING OR FABRICATING ANY MATERIAL.

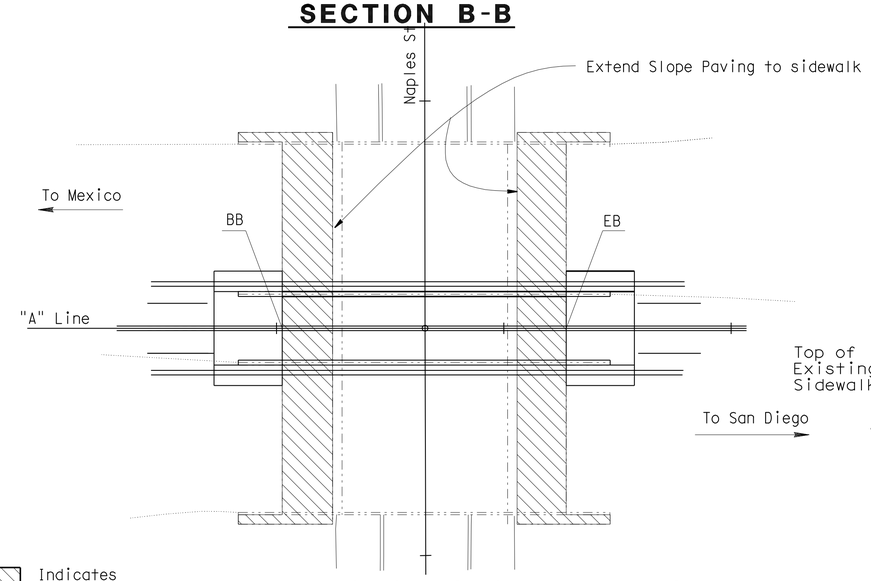

LIMITS OF SLOPE PAVING

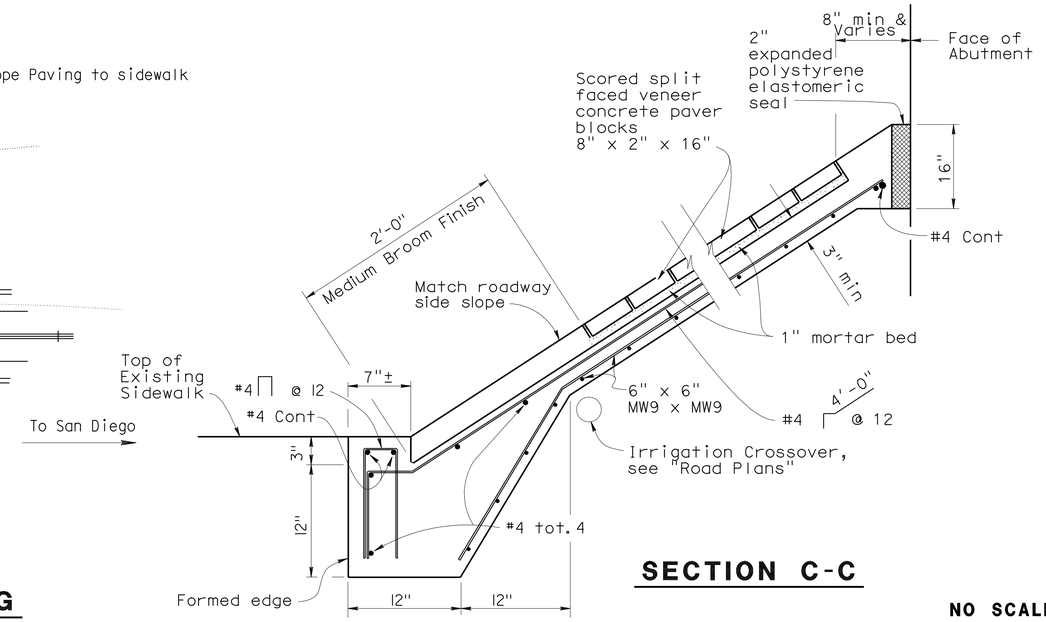

SECTION C-C

NO SCALE

DESIGN	BY P. Peterson	CHECKED J. Peterson	
DETAILS	BY C. Paclibar	CHECKED J. Peterson	
QUANTITIES	BY P. Peterson	CHECKED J. Peterson	

STATE OF CALIFORNIA
DEPARTMENT OF TRANSPORTATION

DIVISION OF ENGINEERING SERVICES
STRUCTURE DESIGN
DESIGN BRANCH 14

BRIDGE NO. 57-0634
POST MILE 5.54

NAPLES STREET UC (WIDEN)
SLOPE PAVING (MASONRY BLOCK)

STRUCTURES DESIGN DETAIL SHEET (ENGLISH) (REV. 09-01-10)

ORIGINAL SCALE IN INCHES FOR REDUCED PLANS 0 1 2 3

UNIT: 3613
PROJECT NUMBER & PHASE: 11000200501
CONTRACT NO.: 11-2T1811

DISREGARD PRINTS BEARING EARLIER REVISION DATES

REVISION DATES: 04-12-11 03-31-11 03-14-11 03-22-11

SHEET 8 OF 16

FILE => a_57-0634-o-sloppav.dgn

USERNAME => s124496 DATE PLOTTED => 09-DEC-2011 TIME PLOTTED => 09:52

DIST.	COUNTY	ROUTE	POST MILES TOTAL PROJECT	SHEET NO.	TOTAL SHEETS
11	SD	54,805	1.8,5.5/9.4	525	635

Tony Skreslet 8-25-11
REGISTERED ENGINEER - CIVIL

12-5-11
PLANS APPROVAL DATE

REGISTERED PROFESSIONAL ENGINEER TONY SKRESLET No. C50676 Exp. 09-30-11 CIVIL STATE OF CALIFORNIA

The State of California or its officers or agents shall not be responsible for the accuracy or completeness of electronic copies of this plan sheet.

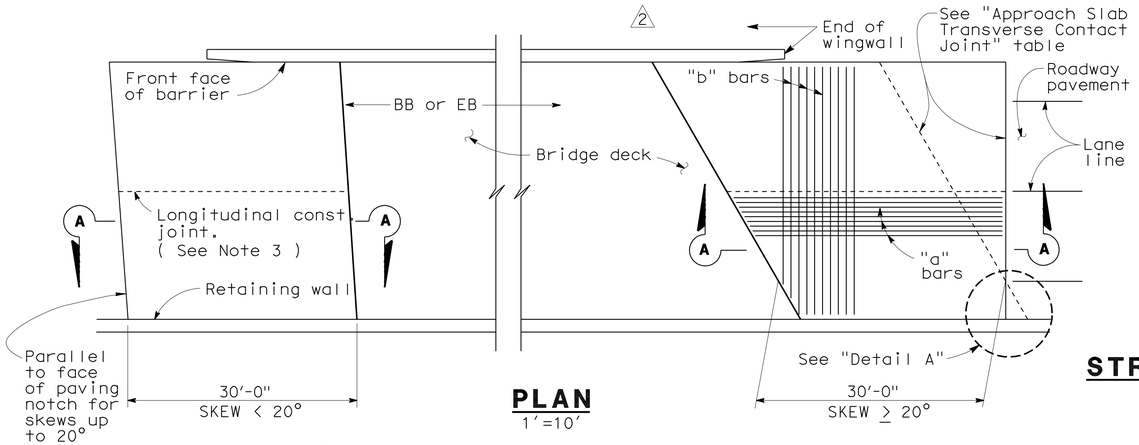

PLAN
1"=10'

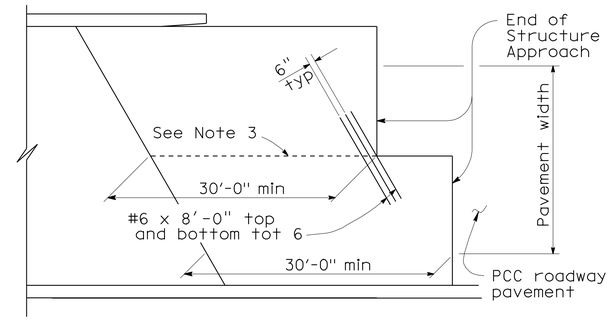

STRUCTURE APPROACH - END STAGGER DETAIL
No Scale

APPROACH SLAB TRANSVERSE CONTACT JOINT		
APPROACH SKEW	WITH AC ROADWAY PAVEMENT	WITH PCC ROADWAY PAVEMENT
< 20°	Parallel to face of paving notch	Parallel to face of paving notch
20°- 45°	Parallel to face of P N use (Detail A)	Stagger lines 24' to 36' apart
> 45°	Parallel to face of P N use (Detail A)	Stagger at each lane line

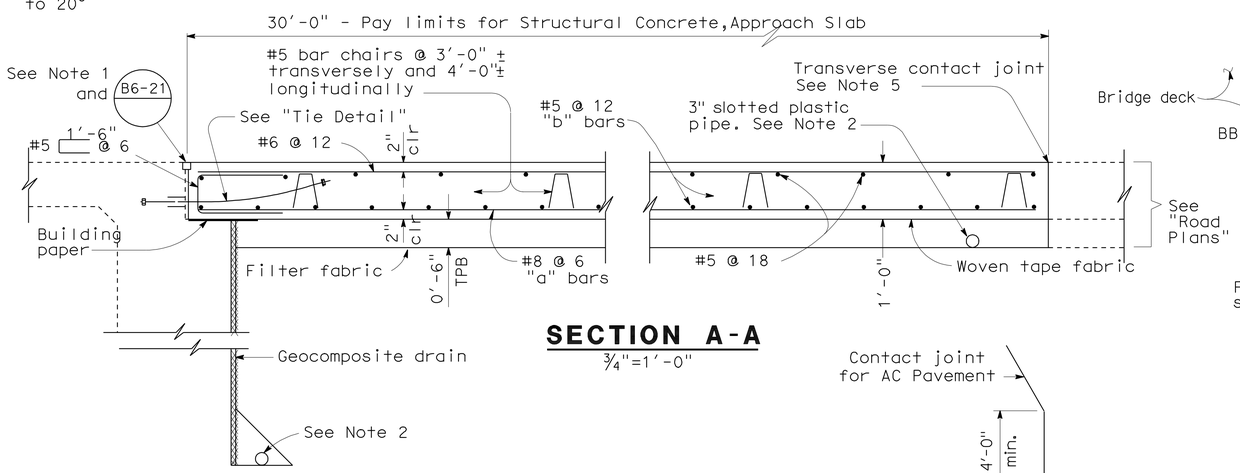

SECTION A-A
¾"=1'-0"

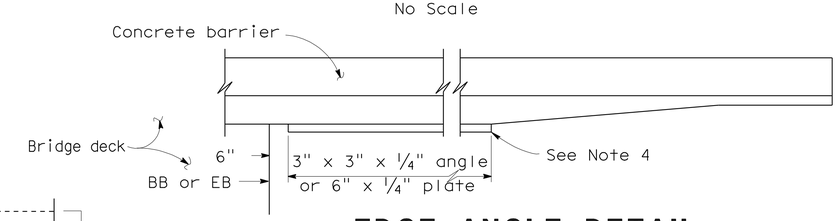

EDGE ANGLE DETAIL
½"=1'-0"

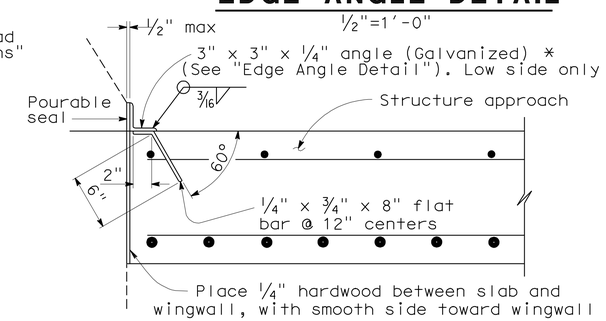

*(TO BE USED WITH TYPE 25 OR TYPE 27 CONCRETE BARRIER)

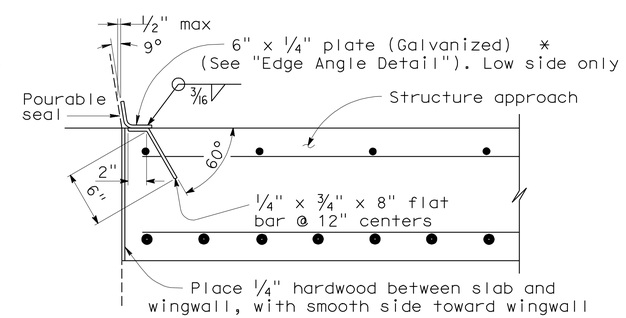

*(TO BE USED WITH TYPE 732 OR TYPE 736 CONCRETE BARRIER)

DETAIL B
1½"=1'-0"

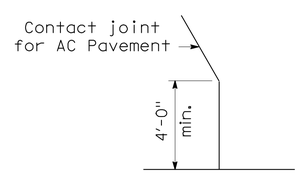

DETAIL A
No Scale

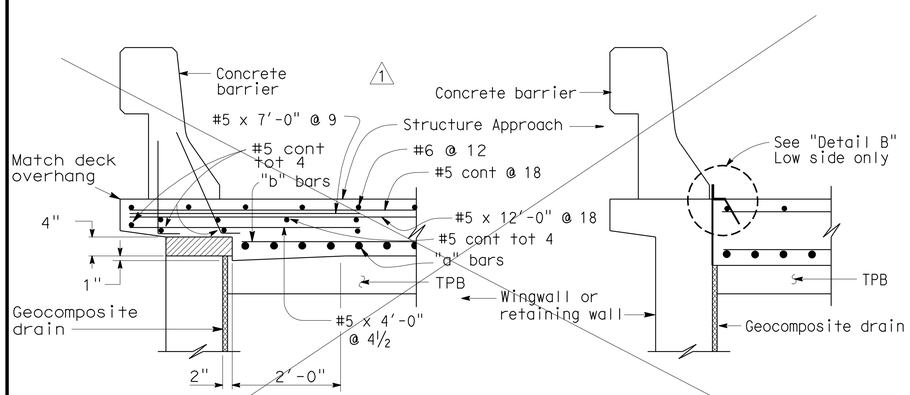

TYPE E-1 TYPE E-2

SECTION C-C
¾"=1'-0"

NOTE:
THE CONTRACTOR SHALL VERIFY ALL CONTROLLING FIELD DIMENSIONS BEFORE ORDERING OR FABRICATING ANY MATERIAL. (Type E-1 to be used, unless otherwise shown on plans)

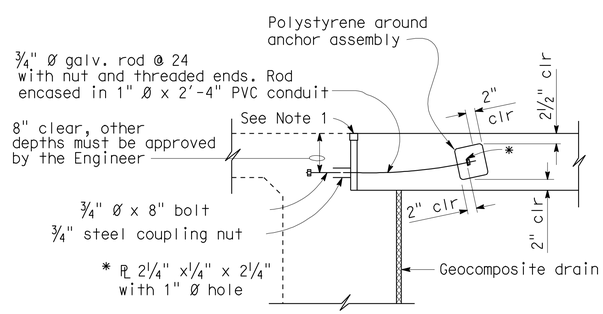

TIE DETAIL
¾"=1'-0"

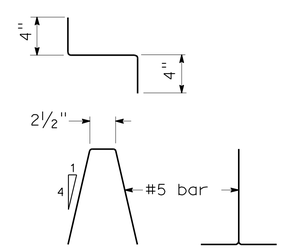

BAR CHAIR DETAIL
1½"=1'-0"

NOTES:

1. For details not noted or shown, see Structure Plans.
2. For drainage details, see "Structure Approach Drainage Details" sheet.
3. Longitudinal construction joints, when permitted by the Engineer, shall be located on lane lines.
4. End angle or plate at beginning of barrier transition, end of wingwall or end of structure approach, as applicable.
5. For transverse contact joint with new PCC paving, refer to Standard Plan P10.
6. At the contractor's option, approach slab transverse reinforcement may be placed parallel to paving notch. Spacing of transverse reinforcement is measured along ℄ roadway.

Polystyrene to be removed.

STANDARD DRAWING

FILE NO. xs3-180e

APPROVED BY M. Ha (RESPONSIBLE TECHNICAL SPECIALIST)
APPROVAL DATE 8-12-08

RELEASED BY O. Alcantara (RESPONSIBLE OFFICE CHIEF)
RELEASE DATE 8-12-08

1 Deleted Detail
2 Modified Detail

STATE OF CALIFORNIA
DEPARTMENT OF TRANSPORTATION

DIVISION OF ENGINEERING SERVICES

BRIDGE NO. 57-0634
POST MILE 5.54

NAPLES STREET UC (WIDEN)
STRUCTURE APPROACH TYPE N(30D)

DS OSD 2147A (ENGLISH STANDARD DRAWING "XS" BORDER REV. 01/11/08)

ORIGINAL SCALE IN INCHES FOR REDUCED PLANS 0 1 2 3

CU 3613
PN & PHASE 11000200501

DISREGARD PRINTS BEARING EARLIER REVISION DATES

REVISION DATES (PRELIMINARY STAGE ONLY) 01-27-11 03-22-11 03-25-11 04-12-1

SHEET 9 OF 16

USERNAME => s124496

a_57-0634-s-sapptyp_n.dgn

DATE PLOTTED => 09-DEC-2011 TIME PLOTTED => 09:52

DIST.	COUNTY	ROUTE	MILE POST TOTAL PROJECT	SHEET NO.	TOTAL SHEETS
11	SD	54,805	1.8,5.5/9.4	526	635

Tony Skreslet 8-25-11
REGISTERED ENGINEER - CIVIL
12-5-11
PLANS APPROVAL DATE
The State of California or its officers or agents shall not be responsible for the accuracy or completeness of electronic copies of this plan sheet.

REGISTERED PROFESSIONAL ENGINEER TONY SKRESLET No. C50676 Exp. 09-30-11 CIVIL STATE OF CALIFORNIA

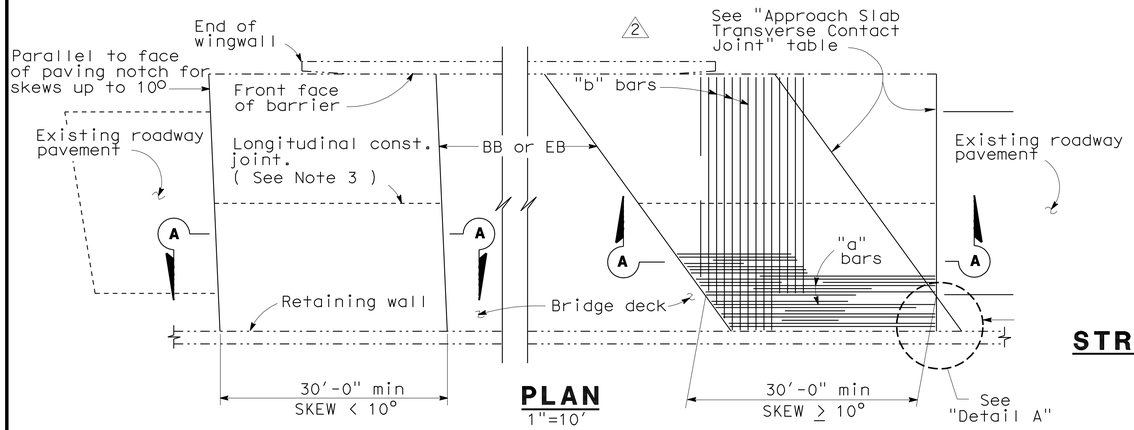

PLAN
1"=10'

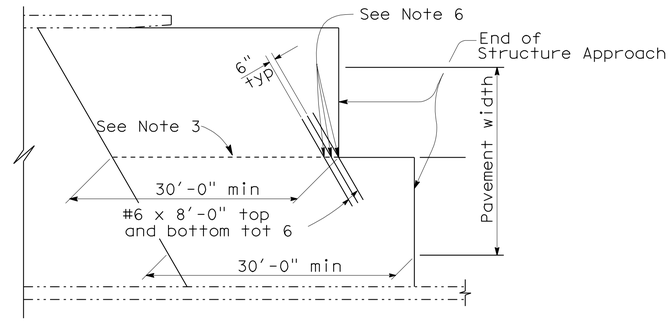

STRUCTURE APPROACH - END STAGGER DETAIL
No Scale

APPROACH SLAB TRANSVERSE CONTACT JOINT		
APPROACH SKEW	WITH AC ROADWAY PAVEMENT	WITH PCC ROADWAY PAVEMENT
< 10°	Parallel to face of paving notch	Parallel to face of paving notch
10° - 45°	Parallel to face of P N use (Detail A)	Stagger lines 24' to 36' apart
> 45°	Parallel to face of P N use (Detail A)	Stagger at each lane line

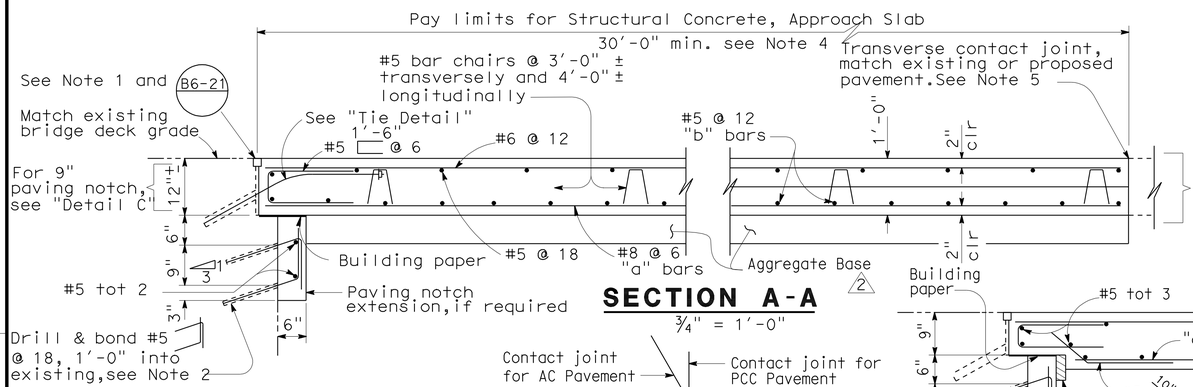

SECTION A-A
¾" = 1'-0"

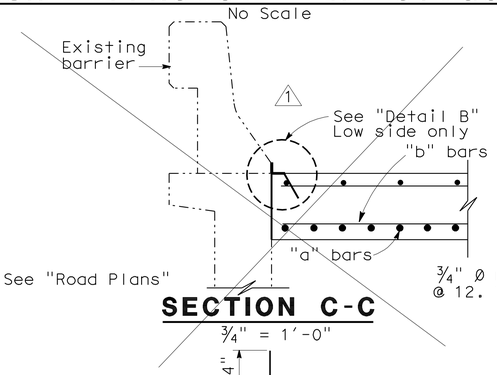

SECTION C-C
¾" = 1'-0"

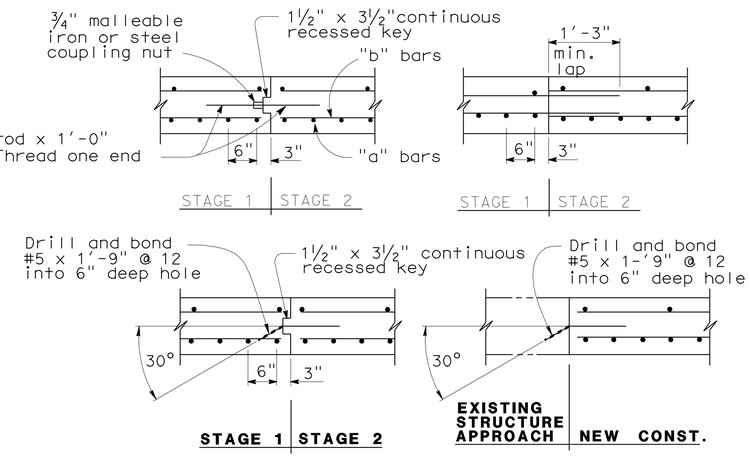

LONGITUDINAL CONSTRUCTION JOINT ALTERNATIVES
¾" = 1'-0"

NOTES:

1. For details not shown or noted, see Structure Plans. Adjust bar reinforcement to clear a sawcut for sealed joint, when required.
2. Space to avoid existing prestress anchorages and main reinforcement.
3. Longitudinal construction joints, when permitted by the Engineer, shall be located on lane lines.
4. Transverse contact joint shall be a minimum of 5'-0" from an existing or constructed weakened plane joint.
5. For transverse contact joint with new PCC paving. refer to Standard Plan P10.
6. Couplers are required for stage construction.
7. End angle or plate at beginning of barrier transition, end of wingwall or end of structure approach as applicable.

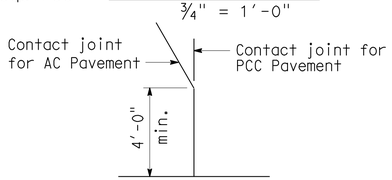

DETAIL A
No Scale

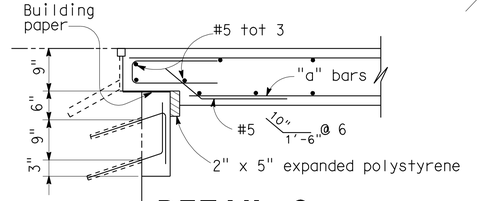

DETAIL C
¾" = 1'-0"

NOTE: For details not shown, see "Section A-A".

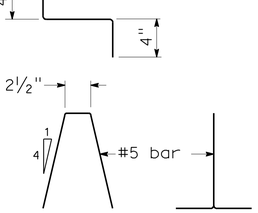

BAR CHAIR DETAIL
1½" = 1'-0"

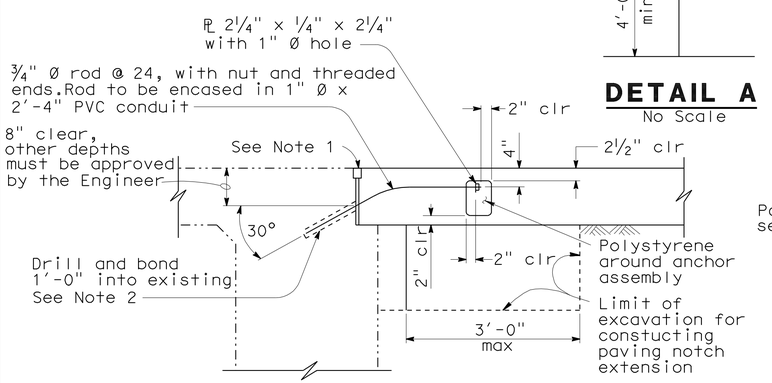

TIE DETAIL
¾" = 1'-0"

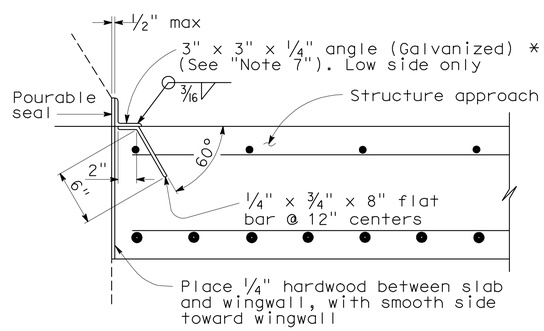

*(TO BE USED WITH TYPE 25 OR TYPE 27 CONCRETE BARRIER)

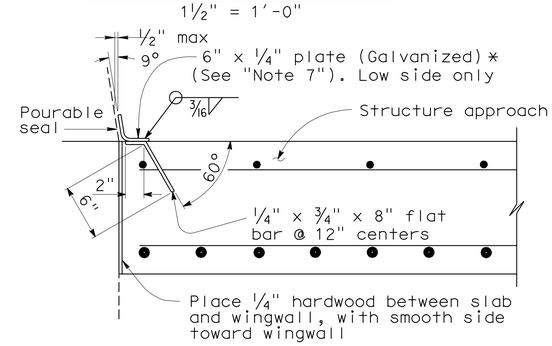

*(TO BE USED WITH TYPE 732 OR TYPE 736 CONCRETE BARRIER)

DETAIL B
1½" = 1'-0"

NOTE:
THE CONTRACTOR SHALL VERIFY ALL CONTROLLING FIELD DIMENSIONS BEFORE ORDERING OR FABRICATING ANY MATERIAL.

STANDARD DRAWING

RELEASE DATE 3/14/05	DESIGN	BY M.TRAFFALIS	CHECKED E.THORKILDSEN	RELEASED BY
	DETAILS	BY R.YEE	CHECKED E.THORKILDSEN	
FILE NO. xs3-140e	SUBMITTED	BY M.HA	DRAWING DATE 8/92	OFFICE CHIEF

1 Deleted Detail
2 Modified Detail

STATE OF CALIFORNIA
DEPARTMENT OF TRANSPORTATION

DIVISION OF ENGINEERING SERVICES

BRIDGE NO. 57-0634
MILE POST 5.54

NAPLES STREET UC (WIDEN)
STRUCTURE APPROACH TYPE R(30D)

DS OSD 2147A (ENGLISH) (REV. X/XX/XX)

ORIGINAL SCALE IN INCHES FOR REDUCED PLANS 0 1 2 3

CU 3613
PN & PHASE 11000200501

DISREGARD PRINTS BEARING EARLIER REVISION DATES

REVISION DATES (PRELIMINARY STAGE ONLY) 1-27-11 3-22-11 3-23-11 4-12-11

SHEET 10 OF 16

USERNAME => s124496

DATE PLOTTED => 09-DEC-2011 TIME PLOTTED => 09:22

a_57-0634-s-sapptx

DIST	COUNTY	ROUTE	POST MILES TOTAL PROJECT	SHEET No.	TOTAL SHEETS
11	SD	54,805	1.8,5.5/9.4	527	635

Tony Skreslet 8-25-11
REGISTERED CIVIL ENGINEER DATE

12-5-11
PLANS APPROVAL DATE

REGISTERED PROFESSIONAL ENGINEER TONY SKRESLET No. C50676 Exp. 09-30-11 CIVIL STATE OF CALIFORNIA

The State of California or its officers or agents shall not be responsible for the accuracy or completeness of electronic copies of this plan sheet.

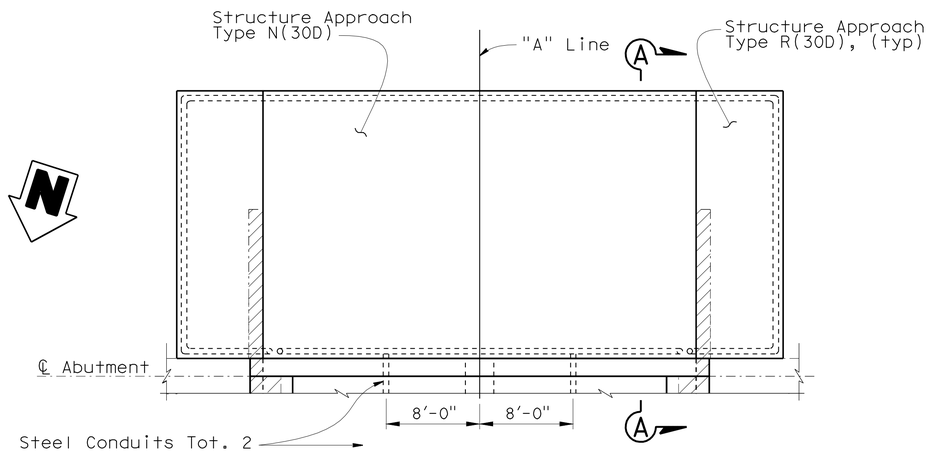

NOTE: Abutment 1 shown, Abutment 2 similar

PLAN
No Scale

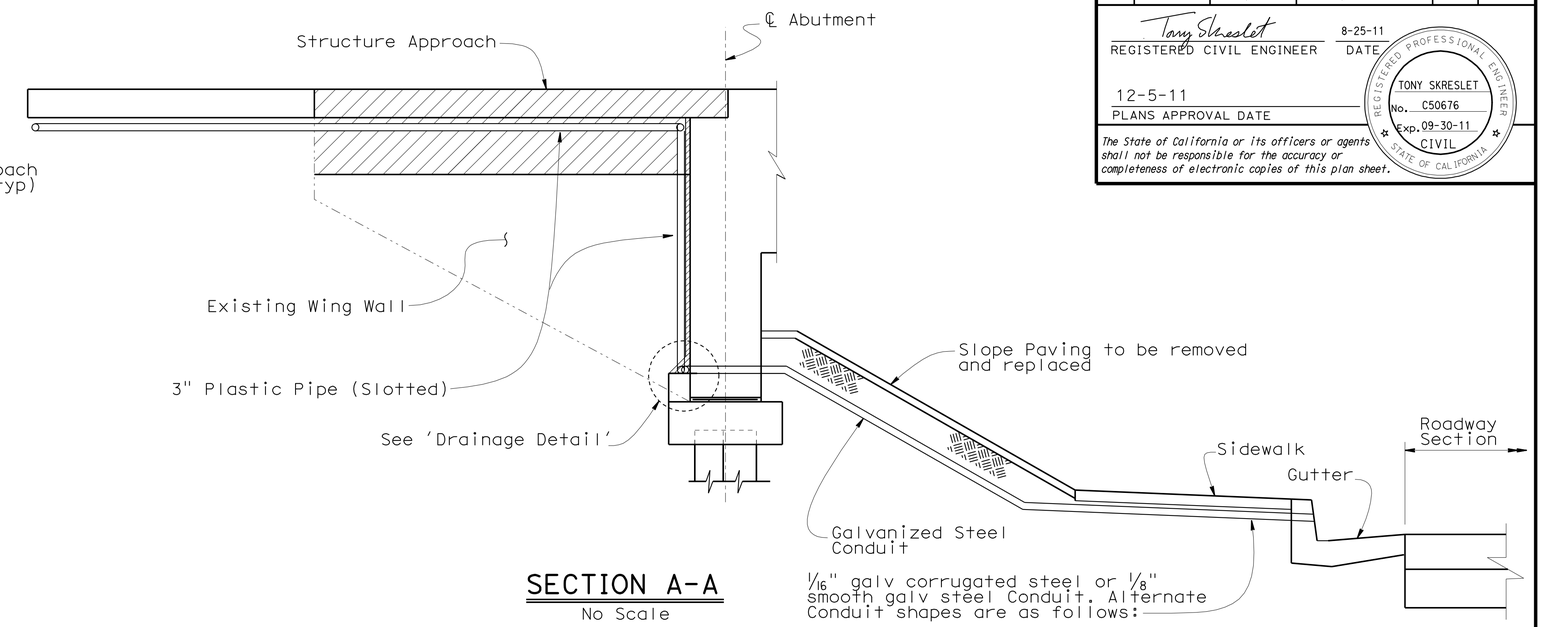

SECTION A-A
No Scale

NOTE: Sidewalk and Gutter to be removed and replaced as directed by Engineer

LEGEND:

Indicates top 3' of Wing Wall and portion of Overhang to be removed

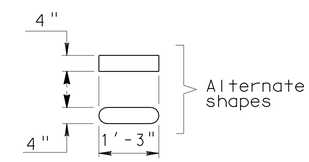

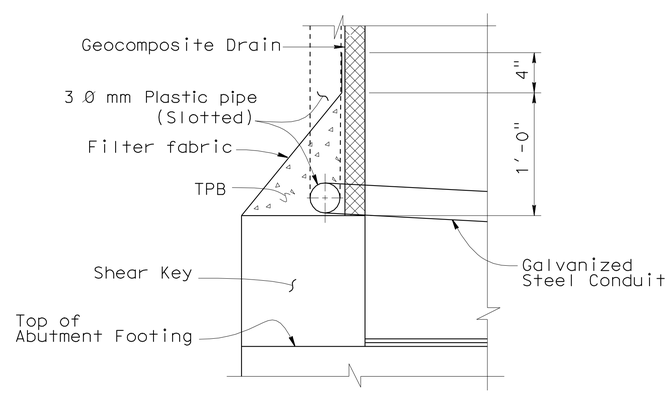

DRAINAGE DETAIL
No Scale

NOTE:
THE CONTRACTOR SHALL VERIFY ALL CONTROLLING FIELD DIMENSIONS BEFORE ORDERING OR FABRICATING ANY MATERIAL.

	BY	CHECKED
DESIGN	T. Skreslet	J. M. Peterson
DETAILS	T. Nguyen	J. M. Peterson
QUANTITIES	P. A. Peterson	J. M. Peterson

STATE OF CALIFORNIA
DEPARTMENT OF TRANSPORTATION

DIVISION OF ENGINEERING SERVICES
STRUCTURE DESIGN
DESIGN BRANCH 14

BRIDGE NO. 57-0634
POST MILE 5.54

NAPLES STREET UC (WIDEN)
STRUCTURE APPROACH DRAINAGE DETAILS

STRUCTURES DESIGN DETAIL SHEET (ENGLISH) (REV. 09-01-10)

ORIGINAL SCALE IN INCHES FOR REDUCED PLANS 0 1 2 3

UNIT: 3613
PROJECT NUMBER & PHASE: 11000200501
CONTRACT NO.: 11-2T1811

DISREGARD PRINTS BEARING EARLIER REVISION DATES

REVISION DATES: 06-20-11 08-10-11 03-23-11 04-14-11

SHEET 11 OF 16

FILE => o_57-0634-t-sadd.dgn

USERNAME => s124496 DATE PLOTTED => 09-DEC-2011 TIME PLOTTED => 09:22

DIST	COUNTY	ROUTE	POST MILES TOTAL PROJECT	SHEET No	TOTAL SHEETS
11	SD	54,805	1.8,5.5/9.4	528	635

REGISTERED CIVIL ENGINEER 8-1-11

12-5-11
PLANS APPROVAL DATE

The State of California or its officers or agents shall not be responsible for the accuracy or completeness of electronic copies of this plan sheet.

REGISTERED PROFESSIONAL ENGINEER David T-M Liao No. C59838 Exp. 12-31-11 CIVIL STATE OF CALIFORNIA

This LOTB sheet was prepared in accordance with the Caltrans Soil & Rock Logging, Classification, & Presentation Manual (June 2007).

BENCH MARK

BM 805-5.00, Brass disk in sidewalk on north side of E. Palomar St. OC Bridge. Sta 298+46, 60′ Rt from ℄ Rte 805.
Elev 300.93′
N 549996.899
E 1926063.832
NAVD88 (Vertical)
CCS83 (Horizontal)

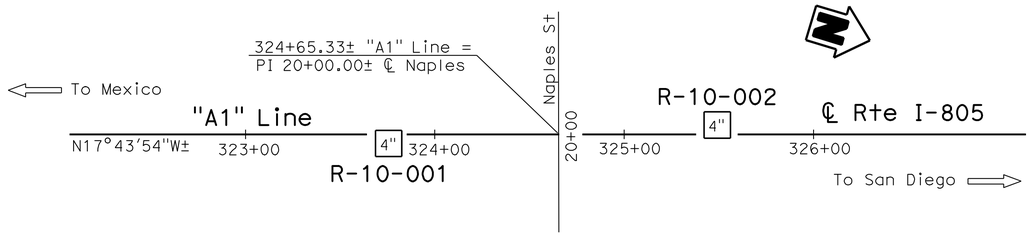

PLAN
1" = 40′

Notes :

1. No ground water was encountered during the 2010 subsurface investigation.
2. RQD designation with "N/A" (not applicable) indicates that the rock encountered within the drill interval was not sound rock, therefore RQD was not calculated.

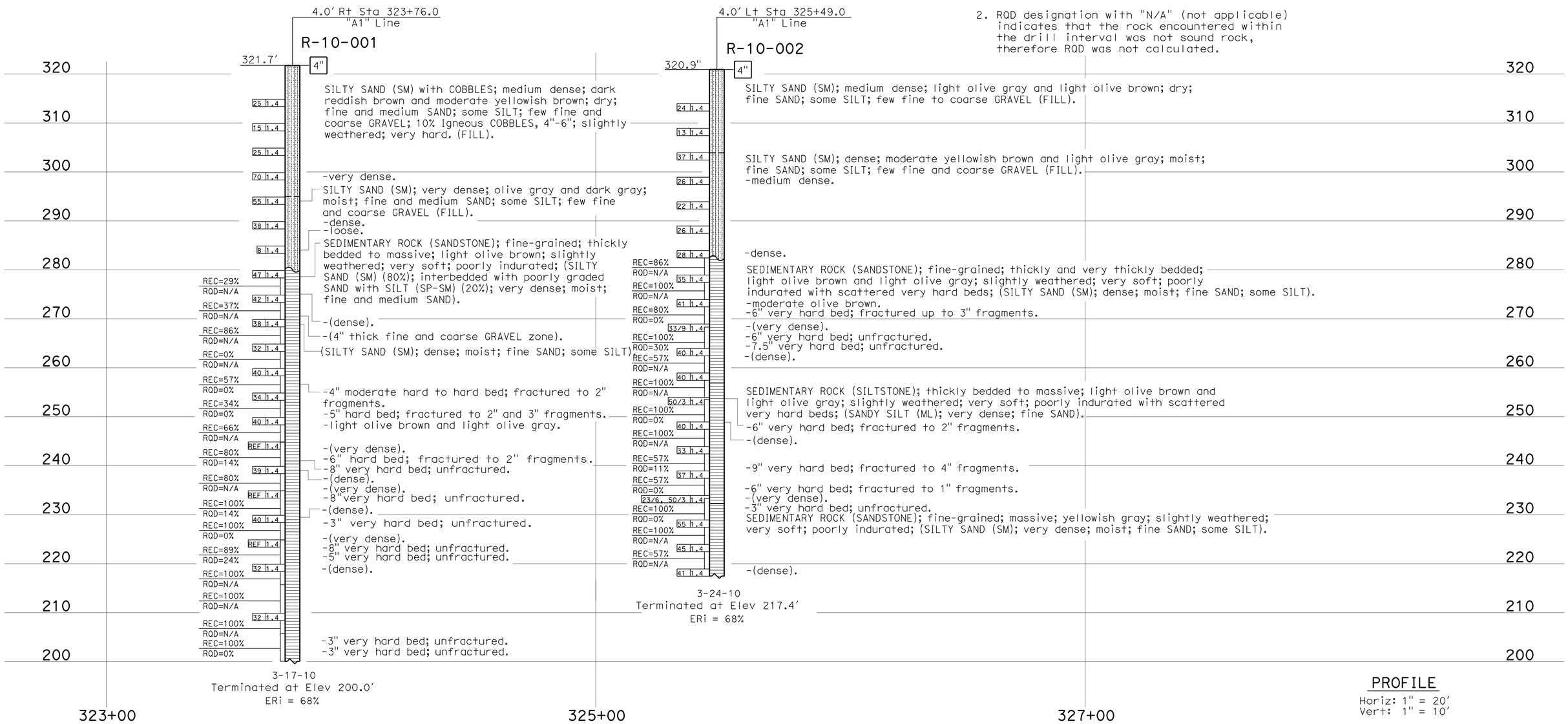

PROFILE
Horiz: 1" = 20′
Vert: 1" = 10′

ENGINEERING SERVICES	MATERIALS AND GEOTECHNICAL SERVICES	STATE OF CALIFORNIA DEPARTMENT OF TRANSPORTATION	DIVISION OF ENGINEERING SERVICES STRUCTURE DESIGN	BRIDGE NO. 57-0634	NAPLES STREET UC (WIDEN)
FUNCTIONAL SUPERVISOR	DRAWN BY: W. Tang 11/10	FIELD INVESTIGATION BY:	DESIGN BRANCH X	POST MILE 5.54	LOG OF TEST BORINGS 1 OF 5
NAME: M. DeSalvatore	CHECKED BY: E. Neupert	T-M Liao			

OGS CIVIL LOG OF TEST BORINGS SHEET

ORIGINAL SCALE IN INCHES FOR REDUCED PLANS 0 1 2 3

UNIT: 3643
PROJECT NUMBER & PHASE: 11000200501 CONTRACT NO.: 11-2T1811

DISREGARD PRINTS BEARING EARLIER REVISION DATES

REVISION DATES 06-03-11 07-08-11 07-18-11 07-15-11 SHEET 12 OF 16

FILE => a_57-0634-z_lotb_1of5.dgn

USERNAME => s124496 DATE PLOTTED => 09-DEC-2011 TIME PLOTTED => 09:23

DIST	COUNTY	ROUTE	POST MILES TOTAL PROJECT	SHEET No	TOTAL SHEETS
11	SD	54,805	1.8,5.5/9.4	529	635

REGISTERED CIVIL ENGINEER 8-1-11

12-5-11
PLANS APPROVAL DATE

REGISTERED PROFESSIONAL ENGINEER David T-M Liao No. C59838 Exp. 12-31-11 CIVIL STATE OF CALIFORNIA

The State of California or its officers or agents shall not be responsible for the accuracy or completeness of electronic copies of this plan sheet.

REFERENCE: CALTRANS SOIL & ROCK LOGGING, CLASSIFICATION, AND PRESENTATION MANUAL (JUNE 2007)

CEMENTATION

Description	Criteria
Weak	Crumbles or breaks with handling or little finger pressure.
Moderate	Crumbles or breaks with considerable finger pressure.
Strong	Will not crumble or break with finger pressure.

CONSISTENCY OF COHESIVE SOILS

Description	Unconfined Compressive Strength (tsf)	Pocket Penetrometer Measurement (tsf)	Torvane Measurement (tsf)	Field Approximation
Very Soft	< 0.25	< 0.25	< 0.12	Easily penetrated several inches by fist
Soft	0.25 to 0.50	0.25 to 0.50	0.12 to 0.25	Easily penetrated several inches by thumb
Medium Stiff	0.50 to 1.0	0.50 to 1.0	0.25 to 0.50	Penetrated several inches by thumb with moderate effort
Stiff	1 to 2	1 to 2	0.50 to 1.0	Readily indented by thumb but penetrated only with great effort
Very Stiff	2 to 4	2 to 4	1.0 to 2.0	Readily indented by thumbnail
Hard	> 4.0	> 4.0	> 2.0	Indented by thumbnail with difficulty

BOREHOLE IDENTIFICATION

Symbol	Hole Type	Description
Size	A	Auger Boring
Size	R P	Rotary drilled boring Rotary percussion boring (air)
Size	R	Rotary drilled diamond core
Size	HD HA	Hand driven (1-inch soil tube) Hand Auger
●	D	Dynamic Cone Penetration Boring
▲	CPT	Cone Penetration Test (ASTM D 5778-95)
⬚	O	Other

Note: Size in inches.

PLASTICITY OF FINE-GRAINED SOILS

Description	Criteria
Nonplastic	A 1/8-inch thread cannot be rolled at any water content.
Low	The thread can barely be rolled and the lump cannot be formed when drier than the plastic limit.
Medium	The thread is easy to roll and not much time is required to reach the plastic limit. The thread cannot be rerolled after reaching the plastic limit. The lump crumbles when drier than the plastic limit.
High	It takes considerable time rolling and kneading to reach the plastic limit. The thread can be rerolled several times after reaching the plastic limit. The lump can be formed without crumbling when drier than the plastic limit.

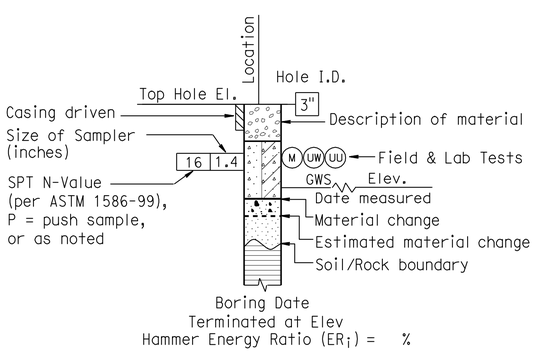

ROTARY BORING

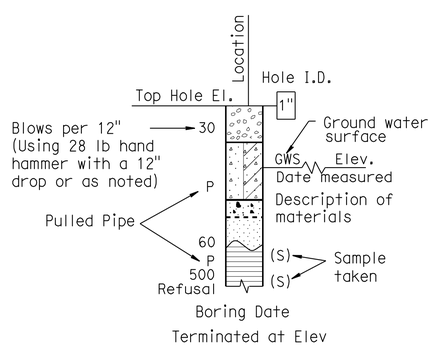

HAND BORING

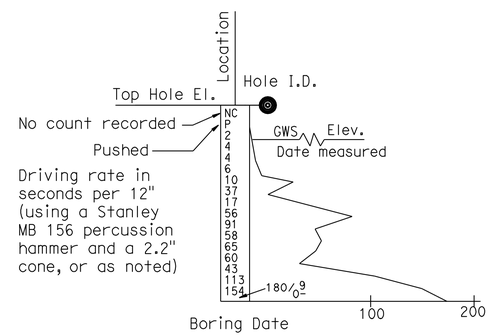

DYNAMIC CONE PENETRATION BORING

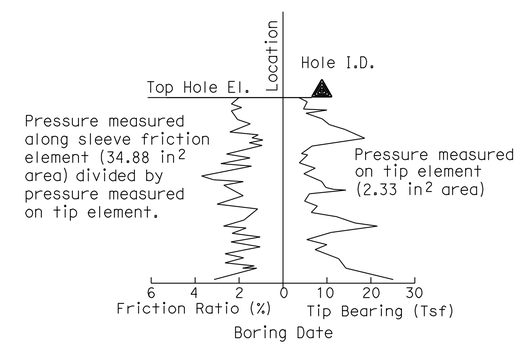

CONE PENETRATION TEST (CPT) SOUNDING

ENGINEERING SERVICES	MATERIALS AND GEOTECHNICAL SERVICES	STATE OF CALIFORNIA DEPARTMENT OF TRANSPORTATION	DIVISION OF ENGINEERING SERVICES STRUCTURE DESIGN DESIGN BRANCH X	BRIDGE NO. 57-0634 POST MILE 5.54	NAPLES STREET UC (WIDEN) LOG OF TEST BORINGS 2 OF 5
	PREPARED BY: W. Tang 11/10				

GS LOTB SOIL LEGEND

ORIGINAL SCALE IN INCHES FOR REDUCED PLANS 0 1 2 3

UNIT: 3643
PROJECT NUMBER & PHASE: 11000200501 CONTRACT NO.: 11-2T1811

DISREGARD PRINTS BEARING EARLIER REVISION DATES

REVISION DATES | SHEET 13 OF 16

FILE => a_57-0634-z_lotb_2of5.dgn

USERNAME => s124496 DATE PLOTTED => 09-DEC-2011 TIME PLOTTED => 09:23

REFERENCE: CALTRANS SOIL & ROCK LOGGING, CLASSIFICATION, AND PRESENTATION MANUAL (JUNE 2007)

DIST	COUNTY	ROUTE	POST MILES TOTAL PROJECT	SHEET No	TOTAL SHEETS
11	SD	54,805	1.8,5.5/9.4	530	635

REGISTERED CIVIL ENGINEER 8-1-11

12-5-11
PLANS APPROVAL DATE

REGISTERED PROFESSIONAL ENGINEER David T-M Liao No. C59838 Exp. 12-31-11 CIVIL STATE OF CALIFORNIA

The State of California or its officers or agents shall not be responsible for the accuracy or completeness of electronic copies of this plan sheet.

GROUP SYMBOLS AND NAMES

Graphic/Symbol	Group Names	Graphic/Symbol	Group Names
GW	Well-graded GRAVEL Well-graded GRAVEL with SAND	CL	Lean CLAY Lean CLAY with SAND Lean CLAY with GRAVEL SANDY lean CLAY SANDY lean CLAY with GRAVEL GRAVELLY lean CLAY GRAVELLY lean CLAY with SAND
GP	Poorly graded GRAVEL Poorly graded GRAVEL with SAND		
GW-GM	Well-graded GRAVEL with SILT Well-graded GRAVEL with SILT and SAND	CL-ML	SILTY CLAY SILTY CLAY with SAND SILTY CLAY with GRAVEL SANDY SILTY CLAY SANDY SILTY CLAY with GRAVEL GRAVELLY SILTY CLAY GRAVELLY SILTY CLAY with SAND
GW-GC	Well-graded GRAVEL with CLAY (or SILTY CLAY) Well-graded GRAVEL with CLAY and SAND (or SILTY CLAY and SAND)		
GP-GM	Poorly graded GRAVEL with SILT Poorly graded GRAVEL with SILT and SAND	ML	SILT SILT with SAND SILT with GRAVEL SANDY SILT SANDY SILT with GRAVEL GRAVELLY SILT GRAVELLY SILT with SAND
GP-GC	Poorly graded GRAVEL with CLAY (or SILTY CLAY) Poorly graded GRAVEL with CLAY and SAND (or SILTY CLAY and SAND)		
GM	SILTY GRAVEL SILTY GRAVEL with SAND	OL	ORGANIC lean CLAY ORGANIC lean CLAY with SAND ORGANIC lean CLAY with GRAVEL SANDY ORGANIC lean CLAY SANDY ORGANIC lean CLAY with GRAVEL GRAVELLY ORGANIC lean CLAY GRAVELLY ORGANIC lean CLAY with SAND
GC	CLAYEY GRAVEL CLAYEY GRAVEL with SAND		
GC-GM	SILTY, CLAYEY GRAVEL SILTY, CLAYEY GRAVEL with SAND	OL	ORGANIC SILT ORGANIC SILT with SAND ORGANIC SILT with GRAVEL SANDY ORGANIC SILT SANDY ORGANIC SILT with GRAVEL GRAVELLY ORGANIC SILT GRAVELLY ORGANIC SILT with SAND
SW	Well-graded SAND Well-graded SAND with GRAVEL		
SP	Poorly graded SAND Poorly graded SAND with GRAVEL	CH	Fat CLAY Fat CLAY with SAND Fat CLAY with GRAVEL SANDY fat CLAY SANDY fat CLAY with GRAVEL GRAVELLY fat CLAY GRAVELLY fat CLAY with SAND
SW-SM	Well-graded SAND with SILT Well-graded SAND with SILT and GRAVEL		
SW-SC	Well-graded SAND with CLAY (or SILTY CLAY) Well-graded SAND with CLAY and GRAVEL (or SILTY CLAY and GRAVEL)	MH	Elastic SILT Elastic SILT with SAND Elastic SILT with GRAVEL SANDY elastic SILT SANDY elastic SILT with GRAVEL GRAVELLY elastic SILT GRAVELLY elastic SILT with SAND
SP-SM	Poorly graded SAND with SILT Poorly graded SAND with SILT and GRAVEL		
SP-SC	Poorly graded SAND with CLAY (or SILTY CLAY) Poorly graded SAND with CLAY and GRAVEL (or SILTY CLAY and GRAVEL)	OH	ORGANIC fat CLAY ORGANIC fat CLAY with SAND ORGANIC fat CLAY with GRAVEL SANDY ORGANIC fat CLAY SANDY ORGANIC fat CLAY with GRAVEL GRAVELLY ORGANIC fat CLAY GRAVELLY ORGANIC fat CLAY with SAND
SM	SILTY SAND SILTY SAND with GRAVEL		
SC	CLAYEY SAND CLAYEY SAND with GRAVEL	OH	ORGANIC elastic SILT ORGANIC elastic SILT with SAND ORGANIC elastic SILT with GRAVEL SANDY ORGANIC elastic SILT SANDY ORGANIC elastic SILT with GRAVEL GRAVELLY ORGANIC elastic SILT GRAVELLY ORGANIC elastic SILT with SAND
SC-SM	SILTY, CLAYEY SAND SILTY, CLAYEY SAND with GRAVEL		
PT	PEAT	OL/OH	ORGANIC SOIL ORGANIC SOIL with SAND ORGANIC SOIL with GRAVEL SANDY ORGANIC SOIL SANDY ORGANIC SOIL with GRAVEL GRAVELLY ORGANIC SOIL GRAVELLY ORGANIC SOIL with SAND
	COBBLES COBBLES and BOULDERS BOULDERS		

FIELD AND LABORATORY TESTING

- (C) Consolidation (ASTM D 2435)
- (CL) Collapse Potential (ASTM D 5333)
- (CP) Compaction Curve (CTM 216)
- (CR) Corrosivity Testing (CTM 643, CTM 422, CTM 417)
- (CU) Consolidated Undrained Triaxial (ASTM D 4767)
- (DS) Direct Shear (ASTM D 3080)
- (EI) Expansion Index (ASTM D 4829)
- (M) Moisture Content (ASTM D 2216)
- (OC) Organic Content-% (ASTM D 2974)
- (P) Permeability (CTM 220)
- (PA) Particle Size Analysis (ASTM D 422)
- (PI) Plasticity Index (AASHTO T 90) Liquid Limit (AASHTO T 89)
- (PL) Point Load Index (ASTM D 5731)
- (PM) Pressure Meter
- (PP) Pocket Penetrometer
- (R) R-Value (CTM 301)
- (SE) Sand Equivalent (CTM 217)
- (SG) Specific Gravity (AASHTO T 100)
- (SL) Shrinkage Limit (ASTM D 427)
- (SW) Swell Potential (ASTM D 4546)
- (TV) Pocket Torvane
- (UC) Unconfined Compression-Soil (ASTM D 2166) Unconfined Compression-Rock (ASTM D 2938)
- (UU) Unconsolidated Undrained Triaxial (ASTM D 2850)
- (UW) Unit Weight (ASTM D 4767)
- (VS) Vane Shear (AASHTO T 223)

APPARENT DENSITY OF COHESIONLESS SOILS

Description	SPT N_{60} (Blows / 12 inches)
Very loose	0 - 4
Loose	5 - 10
Medium Dense	11 - 30
Dense	31 - 50
Very Dense	> 50

MOISTURE

Description	Criteria
Dry	Absence of moisture, dusty, dry to the touch
Moist	Damp but no visible water
Wet	Visible free water, usually soil is below water table

PERCENT OR PROPORTION OF SOILS

Description	Criteria
Trace	Particles are present but estimated to be less than 5%
Few	5 to 10%
Little	15 to 25%
Some	30 to 45%
Mostly	50 to 100%

PARTICLE SIZE

Description		Size
Boulder		> 12"
Cobble		3" to 12"
Gravel	Coarse	3/4" to 3"
	Fine	No. 4 to 3/4"
Sand	Coarse	No. 10 to No. 4
	Medium	No. 40 to No. 10
	Fine	No. 200 to No. 40

ENGINEERING SERVICES

MATERIALS AND GEOTECHNICAL SERVICES

PREPARED BY: W. Tang 11/10

STATE OF CALIFORNIA DEPARTMENT OF TRANSPORTATION

DIVISION OF ENGINEERING SERVICES STRUCTURE DESIGN DESIGN BRANCH X

BRIDGE NO. 57-0634
POST MILE 5.54

NAPLES STREET UC (WIDEN)

LOG OF TEST BORINGS 3 OF 5

GS LOTB SOIL LEGEND

ORIGINAL SCALE IN INCHES FOR REDUCED PLANS 0 1 2 3

UNIT: 3643
PROJECT NUMBER & PHASE: 11000200501
CONTRACT NO.: 11-2T1811

DISREGARD PRINTS BEARING EARLIER REVISION DATES

REVISION DATES

SHEET 14 OF 16

FILE => a_57-0634-z_lotb_3of5.dgn

USERNAME => s124496 DATE PLOTTED => 09-DEC-2011 TIME PLOTTED => 09:23

DIST	COUNTY	ROUTE	POST MILES TOTAL PROJECT	SHEET No	TOTAL SHEETS
11	SD	54,805	1.8,5.5/9.4	531	635

REGISTERED CIVIL ENGINEER 8-1-11

12-5-11
PLANS APPROVAL DATE

The State of California or its officers or agents shall not be responsible for the accuracy or completeness of electronic copies of this plan sheet.

REGISTERED PROFESSIONAL ENGINEER David T-M Liao No. C59838 Exp. 12-31-11 CIVIL STATE OF CALIFORNIA

REFERENCE: CALTRANS SOIL & ROCK LOGGING, CLASSIFICATION, AND PRESENTATION MANUAL (JUNE 2007)

PERCENT CORE RECOVERY (REC) & ROCK QUALITY DESIGNATION (RQD)

$$REC = \frac{\sum \text{Length of the recovered core pieces (inches)}}{\text{Total length of core run (inches)}} \times 100\%$$

$$RQD = \frac{\sum \text{Length of intact core pieces} \geq 4''}{\text{Total length of core run (inches)}} \times 100\%$$

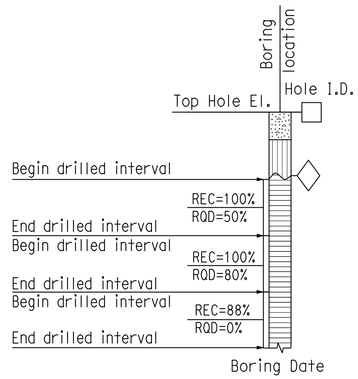

RELATIVE STRENGTH OF INTACT ROCK

Term	Uniaxial Compressive Strength (PSI)
Extremely Strong	> 30,000
Very Strong	14,500 - 30,000
Strong	7,000 - 14,500
Medium Strong	3,500 - 7,000
Weak	700 - 3,500
Very Weak	150 - 700
Extremely Weak	< 150

BEDDING SPACING

Description	Thickness / Spacing
Massive	Greater than 10 ft
Very thickly bedded	3 to 10 ft
Thickly bedded	1 to 3 ft
Moderately bedded	3-5/8" to 1 ft
Thinly bedded	1-1/4" to 3-5/8"
Very thinly bedded	3/8" to 1-1/4"
Laminated	Less than 3/8"

LEGEND OF ROCK MATERIALS

- IGNEOUS ROCK
- SEDIMENTARY ROCK
- METAMORPHIC ROCK

ROCK HARDNESS

Description	Criteria
Extremely Hard	Specimen cannot be scratched with a pocket knife or sharp pick; can only be chipped with repeated heavy hammer blows.
Very Hard	Specimen cannot be scratched with a pocket knife or sharp pick. Breaks with repeated heavy hammer blows.
Hard	Specimen can be scratched with a pocket knife or sharp pick with difficulty (heavy pressure). Heavy hammer blows required to break specimen.
Moderately Hard	Specimen can be scratched with pocket knife or sharp pick with light or moderate pressure. Core breaks with moderate hammer blows.
Moderately Soft	Specimen can be grooved 1/6" deep with a pocket knife or sharp pick with moderate or heavy pressure. Breaks with light hammer blow or heavy manual pressure.
Soft	Specimen can be grooved or gouged easily by a pocket knife or sharp pick with light pressure, can be scratched with fingernail. Breaks with light to moderate manual pressure.
Very Soft	Specimen can be readily indented, grooved or gouged with fingernail, or carved with a pocket knife. Breaks with light manual pressure.

FRACTURE DENSITY

Description	Observed Fracture Density
Unfractured	No fractures.
Very slightly fractured	Lengths greater than 3 feet.
Slightly fractured	Lengths from 1 to 3 feet with few lengths less than 1 foot or greater than 3 feet.
Moderately fractured	Lengths mostly in 4" to 1 foot range with most lengths about 8"
Intensely fractured	Lengths average from 1 to 4" with scattered fragmented intervals with lengths less than 4"
Very intensely fractured	Mostly chips and fragments with a few scattered short core lengths.

Combination descriptors (such as "Very intensely to intensely fractured") are used where equal distribution of both fracture density characteristics is present over a significant interval or exposure, or where characteristics are "in between" the descriptor definitions. Only two adjacent descriptors may be combined.

WEATHERING DESCRIPTORS FOR INTACT ROCK

Description	Diagnostic features					General Characteristics
	Chemical Weathering-Discoloration and/or oxidation		Mechanical Weathering-Grain boundary conditions (disaggregation) primarily for granitics and some coarse-grained sediments	Texture and Solutioning		
	Body of Rock	Fracture Surfaces		Texture	Solutioning	
Fresh	No discoloration, not oxidized.	No discoloration or oxidation.	No separation, intact (tight).	No change.	No solutioning.	Hammer rings when crystalline rocks are struck.
Slightly Weathered	Discoloration or oxidation is limited to surface of, or short distance from, fractures; some feldspar crystals are dull.	Minor to complete discoloration or oxidation of most surfaces.	No visible separation, intact (tight).	Preserved.	Minor leaching of some soluble minerals may be noted.	Hammer rings when crystalline rocks are struck. Body of rock not weakened.
Moderately Weathered	Discoloration or oxidation extends from fractures usually throughout; Fe-Mg minerals are "rusty," feldspar crystals are "cloudy."	All fracture surfaces are discolored or oxidized.	Partial separation of boundaries visible.	Generally preserved.	Soluble minerals may be mostly leached.	Hammer does not ring when rock is struck. Body of rock is slightly weakened.
Intensely Weathered	Discoloration or oxidation throughout; all feldspars and Fe-Mg minerals are altered to clay to some extent; or chemical alteration produces in-situ disaggregation, see grain boundary conditions.	All fracture surfaces are discolored or oxidized, surfaces friable.	Partial separation, rock is friable; in semiarid conditions granitics are disaggregated.	Texture altered by chemical disintegration (hydration, argillation).	Leaching of soluble minerals may be complete.	Dull sound when struck with hammer, usually can be broken with moderate to heavy manual pressure or by light hammer blow without reference to planes of weakness such as incipient or hairline fractures, or veinlets. Rock is significantly weakened.
Decomposed	Discolored or oxidized throughout, but resistant minerals such as quartz may be unaltered; all feldspars and Fe-Mg minerals are completely altered to clay.		Complete separation of grain boundaries (disaggregated).	Resembles a soil, partial or complete remnant rock structure may be preserved; leaching of soluble minerals usually complete.		Can be granulated by hand. Resistant minerals such as quartz may be present as "stringers" or "dikes."

Combination descriptors (such as "slightly weathered to fresh") are permissible where equal distribution of both weathering characteristics is present over significant intervals or where characteristics present are "in between" the diagnostic feature. However, combination descriptors should not be used where significant, identifiable zones can be delineated. Only two adjacent descriptors may be combined. "Very intensely weathered" is the combination descriptor for "intensely weathered to decomposed."

ENGINEERING SERVICES

MATERIALS AND GEOTECHNICAL SERVICES

PREPARED BY: W. Tang 11/10

STATE OF CALIFORNIA DEPARTMENT OF TRANSPORTATION

DIVISION OF ENGINEERING SERVICES STRUCTURE DESIGN DESIGN BRANCH X

BRIDGE NO. 57-0634
POST MILE 5.54

NAPLES STREET UC (WIDEN)

LOG OF TEST BORINGS 4 OF 5

GS LOTB SOIL LEGEND

ORIGINAL SCALE IN INCHES FOR REDUCED PLANS 0 1 2 3

UNIT: 3643
PROJECT NUMBER & PHASE: 11000200501
CONTRACT NO.: 11-2T1811

DISREGARD PRINTS BEARING EARLIER REVISION DATES

REVISION DATES

SHEET 15 OF 16

FILE => a_57-0634-z_lotb_4of5.dgn

USERNAME => s124496 DATE PLOTTED => 09-DEC-2011 TIME PLOTTED => 09:23

FED. ROAD DIV. NO.	STATE	F. A. PROJECT NO.	SHEET NO.	TOTAL SHEETS
7	CALIF.			

DIST.	COUNTY	ROUTE	SECTION	SHEET NO.	TOTAL SHEETS
11	SD	805	3.3	162	215

DIST. ENG. OF STRUCTURES
DATE APPROVED May 26, 1969

BENCH MARK

BM" BL-878 B Elev. 304.51
2" I. P. with std. brass disc set on ℄ of Nacion St. produced S. to a point on first ridge 500'± S. of Naples Street.

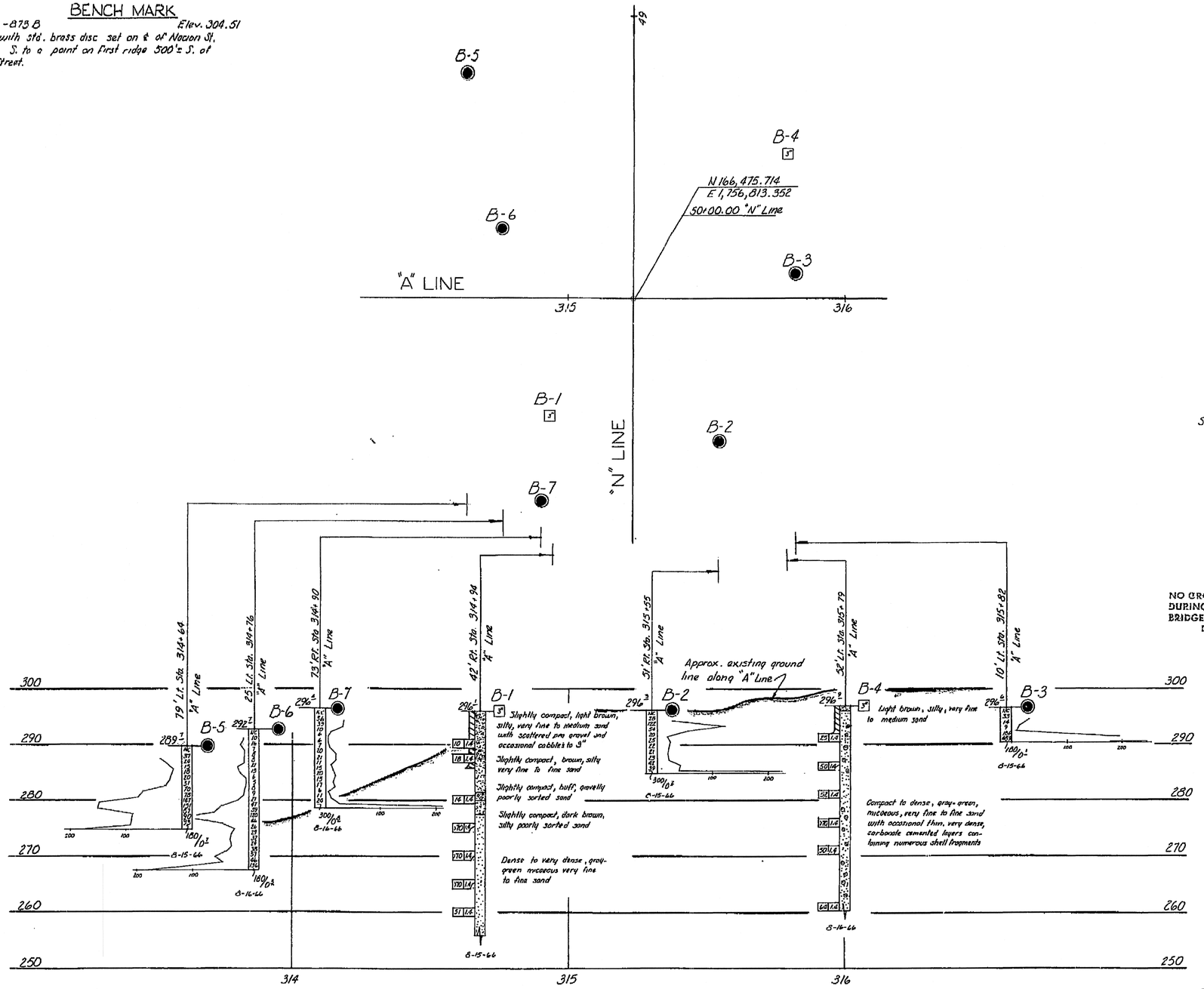

PROFILE

Scale Vert. 1"=10'
Horiz. 1"=20'

PLAN

Scale 1"= 20'

NO GROUND WATER ENCOUNTERED DURING THIS INVESTIGATION BY BRIDGE DEPT. GEOLOGY SECTION
DATE AUG. 1966

REGISTERED PROFESSIONAL ENGINEER
David T-M Liao
No. C59838
Exp. 12-31-11
CIVIL
STATE OF CALIFORNIA

DIVISION OF ENGINEERING SERVICES - MATERIALS AND GEOTECHNICAL SERVICES

As-Built Log of Test Borings sheet is considered an informational document only. As such, the State of California registration seal with signature, license number and registration certificate expiration date confirm that this is a true and accurate copy of the original document. It does not attest to the accuracy or validity of the information contained in the original document. This drawing is available and presented only for the convenience of any bidder, contractor or other interested party.

DIST.	COUNTY	ROUTE	POST MILE-TOTAL PROJECT	Sheet No.	Total Sheets
11	SD	54,805	1.8,5.5/9.4	532	635

REGISTERED CIVIL ENGINEER — 7-14-11 DATE

NAPLES STREET UC (WIDEN)

LOG OF TEST BORINGS 5 OF 5

UNIT: 3643	CONTRACT No.	BRIDGE No.
PROJECT NUMBER & PHASE: 11000200501	11-2T1811	57-0634

NOTE: A COPY OF THIS LOG OF TEST BORINGS IS AVAILABLE AT OFFICE OF STRUCTURE MAINTENANCE AND INVESTIGATIONS, SACRAMENTO, CALIFORNIA — Sheet 16 of 16

TO ACCOMPANY PLANS DATED 12-5-11

SHEET 8 OF 18

STATE OF CALIFORNIA
DEPARTMENT OF PUBLIC WORKS
DIVISION OF HIGHWAYS

NAPLES STREET UNDERCROSSING

LOG OF TEST BORINGS

SCALE As Noted | BRIDGE 57-634 S/L | FILE | DRAWING 57634-10

LEGEND OF BORING OPERATIONS

- Penetrometer
- 2¼" Cone Penetrometer
- Sampler Boring (Dry)
- Rotary Boring (Wet)
- Auger Boring (Dry)
- Jet Boring
- Core Boring
- Test Pit

Penetrations Boring — Rotary Boring — 1" Soil Tube

LEGEND OF EARTH MATERIALS

Gravel; Sand; Silt; Clay; Sandy Clay or Clayey Sand; Silty Clay or Clayey Silt; Sandy Silt or Silty Sand; Peat and Organic Matter; Fill Material; Igneous Rock; Sedimentary Rock; Metamorphic Rock

CLASSIFICATION OF MATERIAL BASED ON STANDARD GRADE SIZE LIMITS

Diagram showing the basis for estimates of percentages of gravel, sand and fines in determination of class names. If gravel is present in appreciable quantity the term "gravelly" may be added to the class name. The terms "gravelly sand", "coarse", "medium" and "fine" when used to describe sand, refer to standard grade size limits.

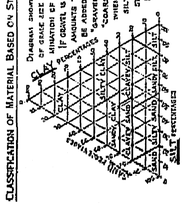

NOTE: Classification of earth material as shown on this sheet is based upon field inspection and is not to be construed to imply mechanical analysis.

FIELD STUDY BY M. ALZERAD 3-16-66
DRAWN BY H. E. Benton 3-16-66
CHECKED
Approval Recommended: Engineering Geologist

BRIDGE DEPARTMENT
ENGINEERING GEOLOGY SECTION

162

AS BUILT PLANS
Contract No. 11-110124
Date Completed
Document No. A0000816

Charge 11201
W.A. 110121

Disregard prints bearing earlier numbers

PREL. DRAWING No. PR- 5/16

FILENAME => a_57-0634-z_lotb_5of5.tif

DIST	COUNTY	ROUTE	POST MILES TOTAL PROJECT	SHEET No.	TOTAL SHEETS
11	SD	54,805	1.8,5.5/9.4	533	635

Tony Skreslet 8-25-11
REGISTERED CIVIL ENGINEER DATE

12-5-11
PLANS APPROVAL DATE

REGISTERED PROFESSIONAL ENGINEER TONY SKRESLET No. C50676 Exp. 09-30-11 CIVIL STATE OF CALIFORNIA

The State of California or its officers or agents shall not be responsible for the accuracy or completeness of electronic copies of this plan sheet.

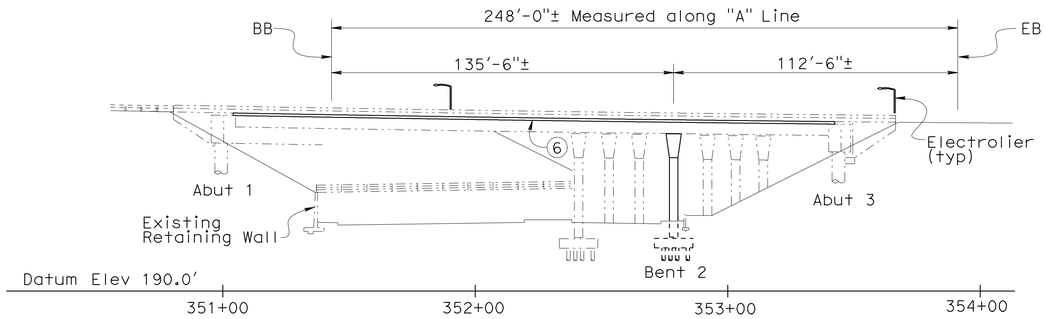

ELEVATION

1"=30'-0"

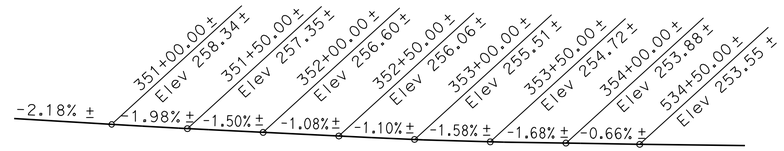

PROFILE GRADE (LEFT)

No Scale

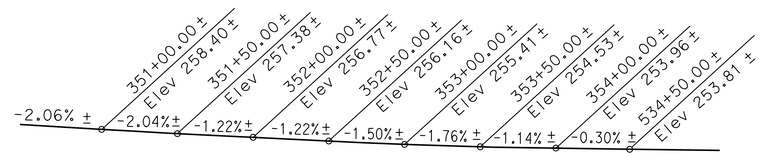

PROFILE GRADE (RIGHT)

No Scale

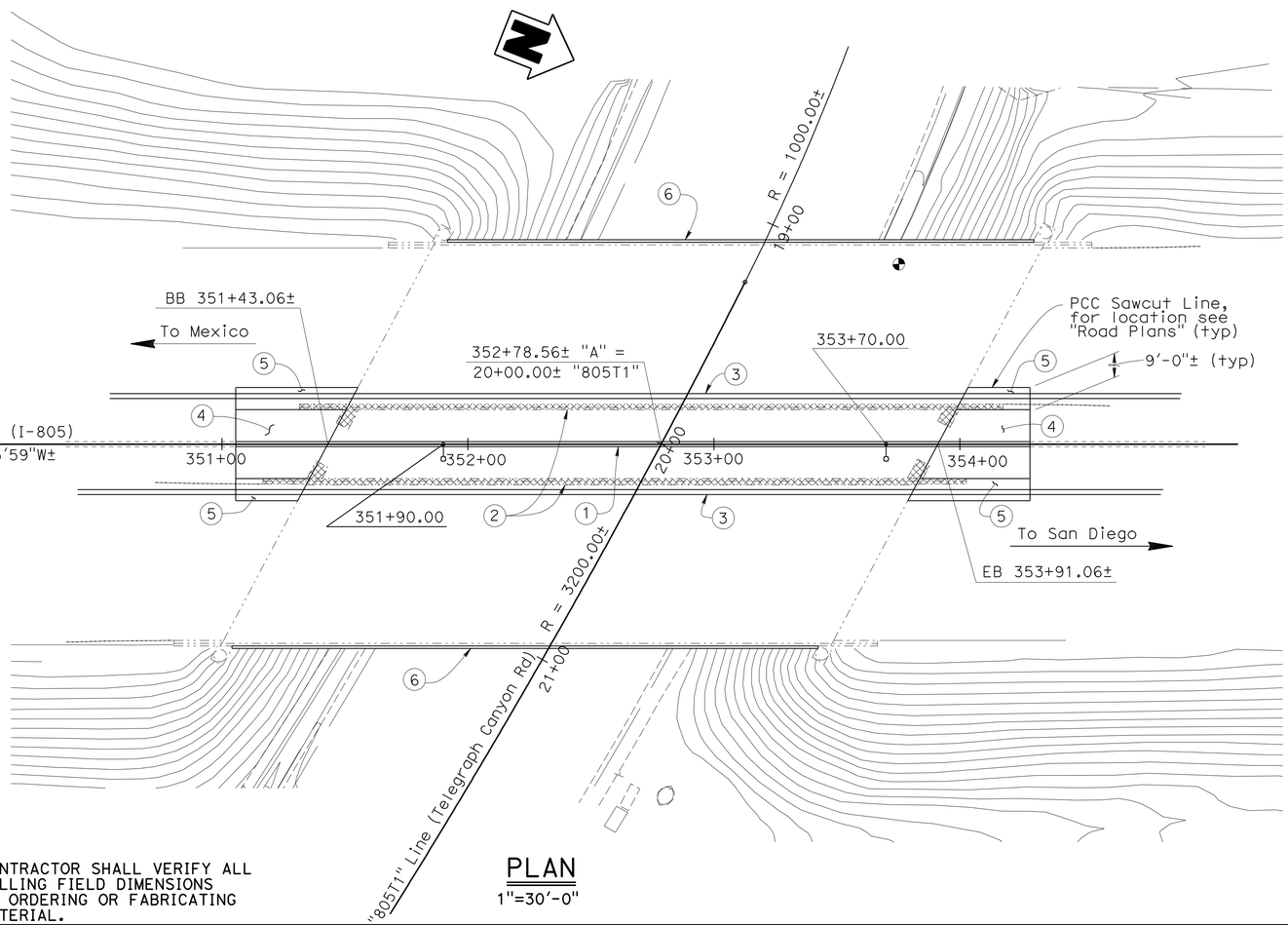

PLAN

1"=30'-0"

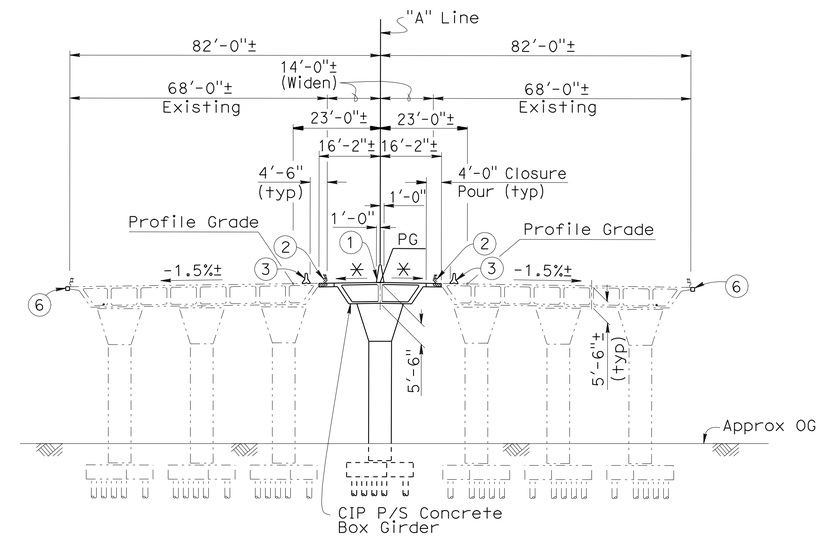

TYPICAL SECTION

1"=20'-0"

NOTES:

1. Concrete Barrier (Type 60GA)
2. Remove existing Barrier Railing (Type 9) portion of Overhang and Abutment. All structural metal to be salvaged
3. Temporary Railing (Type K), see "Road Plans"
4. Structure Approach Type N(30D), transverse width to match widening
5. Structure Approach Type R(30D)
6. Galvanized Steel Edge Drain

LEGEND:

- Indicates Bridge removal (portion)
- Point of Minimum Vertical Clearance, 36'-0"±
- Indicates existing structure
- Indicates match existing Grade and Cross Slope
- Indicates Electrolier Type 15, tot. 2

NOTE:
THE CONTRACTOR SHALL VERIFY ALL CONTROLLING FIELD DIMENSIONS BEFORE ORDERING OR FABRICATING ANY MATERIAL.

Douglas P. Wancal
DESIGN ENGINEER

	BY	CHECKED			
DESIGN	L. Bahia	T. Skreslet	LOAD & RESISTANCE FACTOR DESIGN	LIVE LOADING: HL93 W/"LOW-BOY"; PERMIT DESIGN VEHICLE	
DETAILS	T. Nguyen	T. Skreslet	LAYOUT	L. Bahia	T. Skreslet
QUANTITIES	S. Galgiani	L. Bahia	SPECIFICATIONS	R. Franti	PLANS AND SPECS COMPARED X

ORIGINAL SCALE IN INCHES FOR REDUCED PLANS 0 1 2 3

STATE OF CALIFORNIA
DEPARTMENT OF TRANSPORTATION

DIVISION OF ENGINEERING SERVICES
STRUCTURE DESIGN
DESIGN BRANCH 14

BRIDGE NO. 57-0635
POST MILE 6.06

TELEGRAPH CANYON ROAD UC (WIDEN)
GENERAL PLAN

UNIT: 3613
PROJECT NUMBER & PHASE: 11000200501
CONTRACT NO.: 11-2T1811

DISREGARD PRINTS BEARING EARLIER REVISION DATES

REVISION DATES: 10-10-11 10-21-11 08-25-11 09-12-11

SHEET 1 OF 21

USERNAME => s6124196 DATE PLOTTED => 09-DEC-2011 TIME PLOTTED => 10:15

FILE => b_57-0635-a-gp.dgn

DIST	COUNTY	ROUTE	POST MILES TOTAL PROJECT	SHEET No.	TOTAL SHEETS
11	SD	54,805	1.8,5.5/9.4	534	635

Tony Skreslet 8-25-11
REGISTERED CIVIL ENGINEER DATE

12-5-11
PLANS APPROVAL DATE

REGISTERED PROFESSIONAL ENGINEER TONY SKRESLET No. C50676 Exp. 09-30-11 CIVIL STATE OF CALIFORNIA

The State of California or its officers or agents shall not be responsible for the accuracy or completeness of electronic copies of this plan sheet.

INDEX TO PLANS

SHEET NO.	TITLE
1	GENERAL PLAN
2	INDEX TO PLANS
3	FOUNDATION PLAN
4	ABUTMENT LAYOUT
5	ABUTMENT DETAILS
6	BENT LAYOUT
7	BENT DETAILS
8	BENT FOOTING DETAILS
9	TYPICAL SECTION
10	GIRDER LAYOUT
11	STRUCTURE APPROACH TYPE N (30D)
12	STRUCTURE APPROACH TYPE R (30D)
13	STRUCTURE APPROACH DRAINAGE DETAILS
14	DECK DRAIN-TYPE D-2 MODIFIED
15	MISCELLANEOUS DETAILS NO. 1
16	MISCELLANEOUS DETAILS NO. 2
17	LOG OF TEST BORINGS 1 OF 5
18	LOG OF TEST BORINGS 2 OF 5
19	LOG OF TEST BORINGS 3 OF 5
20	LOG OF TEST BORINGS 4 OF 5
21	LOG OF TEST BORINGS 5 OF 5

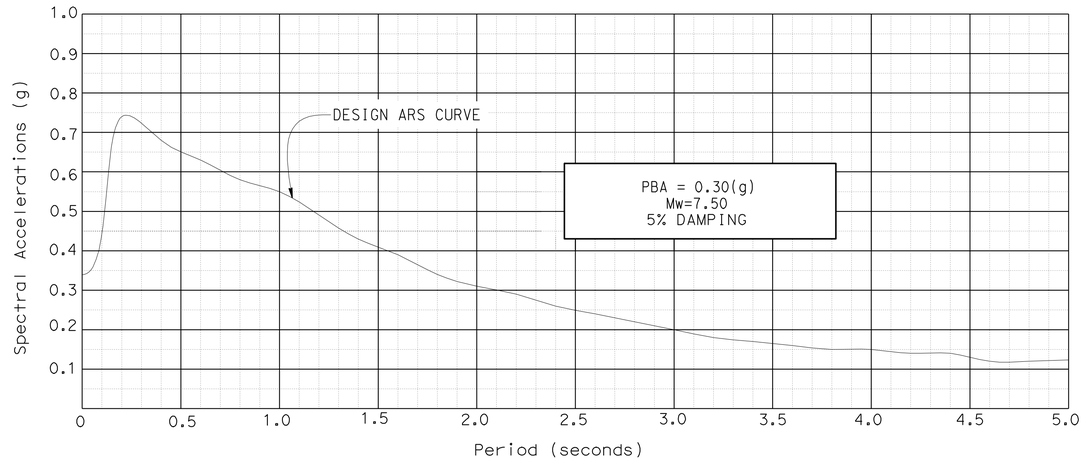

SITE SPECIFIC ACCELERATION RESPONSE SPECTRA

GENERAL NOTES
LOAD AND RESISTANCE FACTOR DESIGN

DESIGN: AASHTO LRFD BRIDGE DESIGN SPECIFICATIONS (4th edition 2007 and California Amendments dated December 2008 and September 2010)

SEISMIC DESIGN: CALTRANS SEISMIC DESIGN CRITERIA (SDC) Version 1.5 dated September 2009

DEAD LOAD: Includes 35 psf for future wearing surface.

LIVE LOADING: HL93 with "Low-Boy" and Permit Design Vehicle.

SEISMIC LOADING: See "Site Specific Acceleration Response Spectra"

REINFORCED CONCRETE: f_y = 60 Ksi
f'_c = See "Concrete Strength and Type Limits."

PRESTRESSED CONCRETE: See "Prestressing Notes" on "Girder Layout" sheet

STRUCTURAL STEEL: f_y = ASTM A709 Grade 50

STANDARD PLANS DATED MAY 2006

A10A	ABBREVIATIONS
A62C	LIMITS OF PAYMENT FOR EXCAVATION AND BACKFILL BRIDGE
A76D	CONCRETE BARRIER TYPE 60G
B0-1	BRIDGE DETAILS
B0-3	BRIDGE DEAILS
B0-5	BRIDGE DETAILS
B0-13	BRIDGE DETAILS
B6-21	JOINT SEALS (MAXIMUM MOVEMENT RATING = 2)
B7-1	BOX GIRDER DETAILS
B8-5	CAST-IN-PLACE PRESTRESSED GIRDER DETAILS

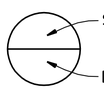

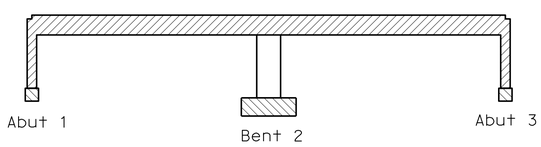

Structural Concrete, Bridge (3.6 Ksi at 28 days)

Structural Concrete, Bridge (5.0 Ksi at 28 days)

Structural Concrete, Bridge Footing (3.6 Ksi at 28 days)

CONCRETE STRENGTH AND TYPE LIMITS

No Scale

PILE DATA TABLE

LOCATION	PILE TYPE	NOMINAL RESISTANCE (KIPS)		DESIGN TIP ELEVATION (FT)	SPECIFIED TIP (FT)
		Compression	Tension		
Bent 2	HP 14X89	390	190	167.0(a) 172.0(b)	167.0

Design Tip controlled by (a) Compression (b) Tension

QUANTITIES

BRIDGE REMOVAL (PORTION), LOCATION B	LUMP	SUM
STRUCTURE EXCAVATION (BRIDGE)	182	CY
STRUCTURE BACKFILL (BRIDGE)	85	CY
AGGREGATE BASE (APPROACH SLAB)	6	CY
FURNISH STEEL PILING (HP 14 X 89)	880	LF
DRIVE STEEL PILE (HP 14 X 89)	22	EA
PRESTRESSING CAST-IN-PLACE CONCRETE	LUMP	SUM
STRUCTURAL CONCRETE, BRIDGE FOOTING	80	CY
STRUCTURAL CONCRETE, BRIDGE	540	CY
STRUCTURAL CONCRETE, APPROACH SLAB (TYPE N)	88	CY
STRUCTURAL CONCRETE, APPROACH SLAB (TYPE R)	57	CY
DRILL AND BOND DOWEL	126	LF
JOINT SEAL (MR 1½")	105	LF
BAR REINFORCING STEEL (BRIDGE)	181,970	LB
BAR REINFORCING STEEL (EPOXY COATED) (BRIDGE)	1,762	LB
BRIDGE DECK DRAINAGE SYSTEM	7,556	LB
CONCRETE BARRIER (TYPE 60GA)	333	LF

NOTE:
THE CONTRACTOR SHALL VERIFY ALL CONTROLLING FIELD DIMENSIONS BEFORE ORDERING OR FABRICATING ANY MATERIAL.

DIST	COUNTY	ROUTE	POST MILES TOTAL PROJECT	SHEET No	TOTAL SHEETS
11	SD	54,805	1.8,5.5/9.4	535	635

Tony Skreslet 12-23-02
REGISTERED CIVIL ENGINEER DATE

12-5-11
PLANS APPROVAL DATE

REGISTERED PROFESSIONAL ENGINEER TONY SKRESLET No. C50676 Exp. 09-30-11 CIVIL STATE OF CALIFORNIA

The State of California or its officers or agents shall not be responsible for the accuracy or completeness of electronic copies of this plan sheet.

CURVE DATA

No.	R	Δ	T	L
Ⓐ	1000.00±	39°27'10"±	358.57±	688.58±
Ⓑ	3200.00±	11°14'07"±	314.76±	627.50±

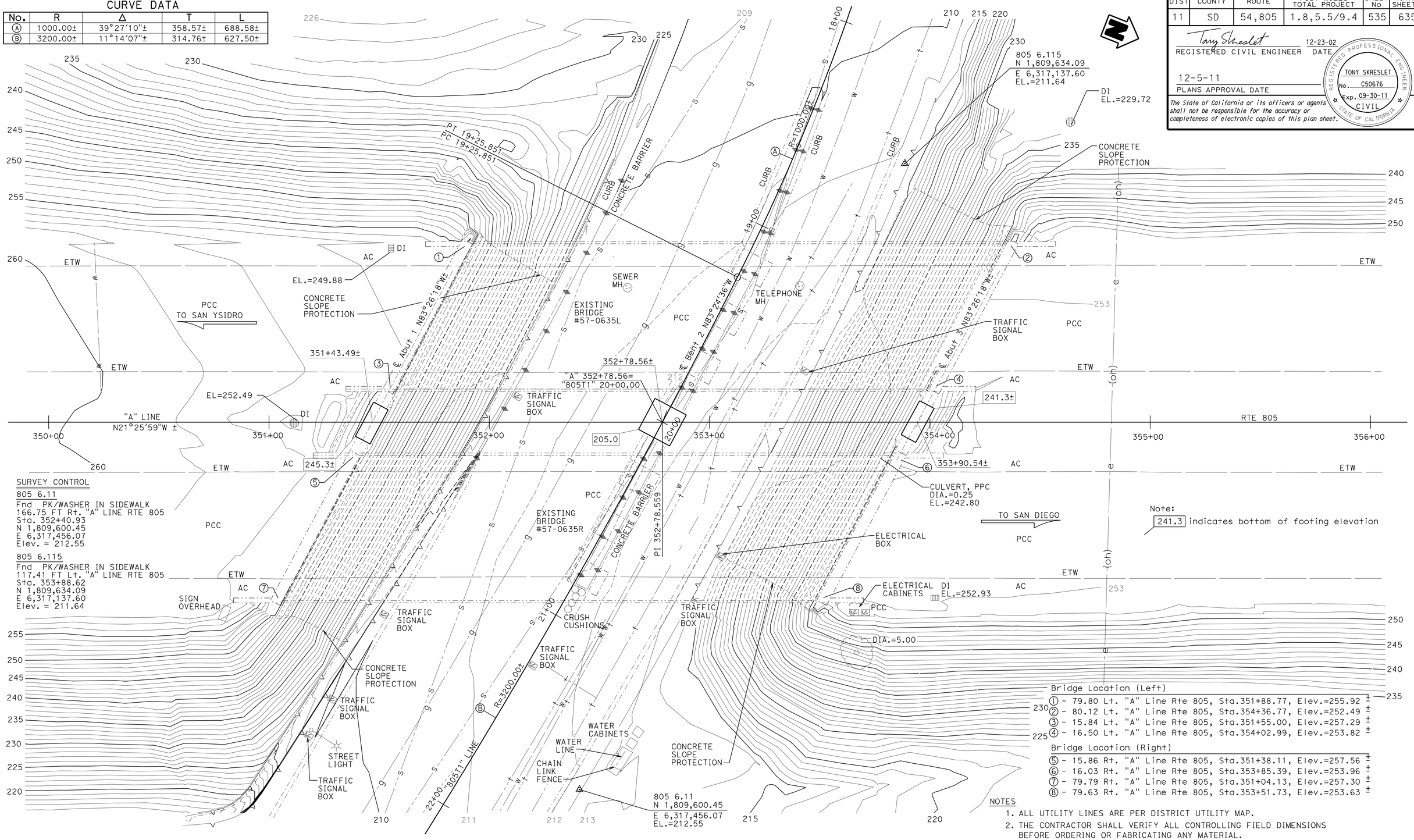

Note:
241.3 indicates bottom of footing elevation

SURVEY CONTROL

805 6.11
Fnd PK/WASHER IN SIDEWALK
166.75 FT Rt. "A" LINE RTE 805
Sta. 352+40.93
N 1,809,600.45
E 6,317,456.07
Elev. = 212.55

805 6.115
Fnd PK/WASHER IN SIDEWALK
117.41 FT Lt. "A" LINE RTE 805
Sta. 353+88.62
N 1,809,634.09
E 6,317,137.60
Elev. = 211.64

Bridge Location (Left)
① - 79.80 Lt. "A" Line Rte 805, Sta.351+88.77, Elev.=255.92 ±
② - 80.12 Lt. "A" Line Rte 805, Sta.354+36.77, Elev.=252.49 ±
③ - 15.84 Lt. "A" Line Rte 805, Sta.351+55.00, Elev.=257.29 ±
④ - 16.50 Lt. "A" Line Rte 805, Sta.354+02.99, Elev.=253.82 ±

Bridge Location (Right)
⑤ - 15.86 Rt. "A" Line Rte 805, Sta.351+38.11, Elev.=257.56 ±
⑥ - 16.03 Rt. "A" Line Rte 805, Sta.353+85.39, Elev.=253.96 ±
⑦ - 79.79 Rt. "A" Line Rte 805, Sta.351+04.13, Elev.=257.30 ±
⑧ - 79.63 Rt. "A" Line Rte 805, Sta.353+51.73, Elev.=253.63 ±

NOTES
1. ALL UTILITY LINES ARE PER DISTRICT UTILITY MAP.
2. THE CONTRACTOR SHALL VERIFY ALL CONTROLLING FIELD DIMENSIONS BEFORE ORDERING OR FABRICATING ANY MATERIAL.

PRELIMINARY INVESTIGATION SECTION

SCALE 1"=20'	VERT.DATUM NAVD88	PHOTOGRAMMETRY AS OF: X			
HORZ.DATUM NAD83 (2007)	SURVEYED	BY District	CHECKED	BY J.Pallares 08/2010	
ALIGNMENT TIES Dist.Traverse Sheet)	DRAFTED	BY T.Zolnikov 08/2010	CHECKED	BY t.Schmalz 08/2010	

DESIGN	BY L. Bahia	CHECKED T. Skreslet
DETAILS	BY L. Xiong	CHECKED T. Skreslet
QUANTITIES	BY L. Bahia	CHECKED S. Galgiani

STATE OF CALIFORNIA
DEPARTMENT OF TRANSPORTATION

DIVISION OF ENGINEERING SERVICES
STRUCTURE DESIGN
DESIGN BRANCH 14

BRIDGE NO. 57-0635
POST MILE 6.06

TELEGRAPH CANYON ROAD UC (WIDEN)
FOUNDATION PLAN

STRUCTURES FOUNDATION PLAN SHEET (ENGLISH) (REV. 10/25/05)

ORIGINAL SCALE IN INCHES FOR REDUCED PLANS 0 1 2 3

CU 3613
PN&Phase 11000200501

DISREGARD PRINTS BEARING EARLIER REVISION DATES

REVISION DATES: 09/07/10 01-26-11 2-4-11 02-09-11 2-16-11 03-01-11 04-12-11 04-28-11 05-26-11 06-16-11

SHEET 3 OF 21

FILE => b_57-0635-e-fp.dgn

USERNAME => s124496 DATE PLOTTED => 09-DEC-2011 TIME PLOTTED => 10:15

DIST	COUNTY	ROUTE	POST MILES TOTAL PROJECT	SHEET No.	TOTAL SHEETS
11	SD	54,805	1.8,5.5/9.4	536	635

Tony Skreslet 8-25-11
REGISTERED CIVIL ENGINEER DATE

12-5-11
PLANS APPROVAL DATE

REGISTERED PROFESSIONAL ENGINEER TONY SKRESLET No. C50676 Exp. 09-30-11 CIVIL STATE OF CALIFORNIA

The State of California or its officers or agents shall not be responsible for the accuracy or completeness of electronic copies of this plan sheet.

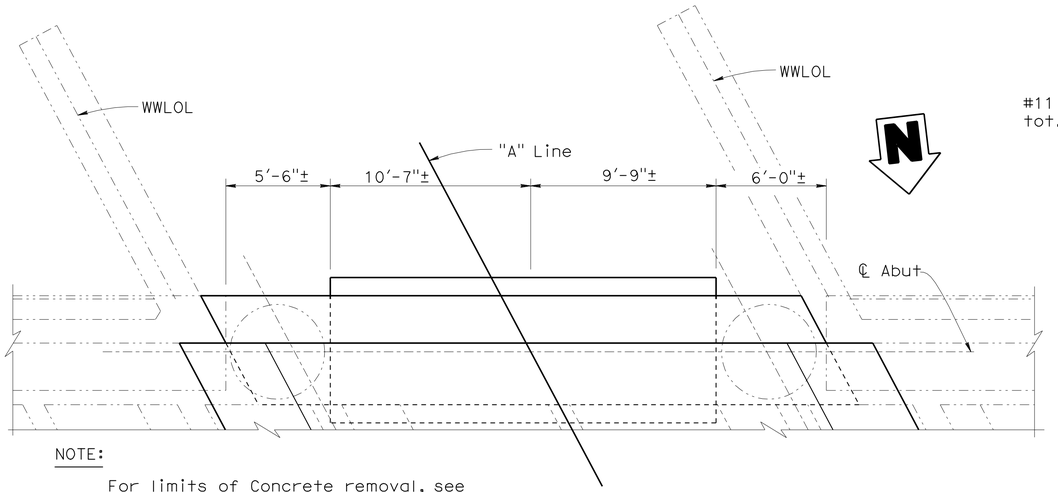

NOTE:

For limits of Concrete removal, see 'Plan-Concrete Removal' on "ABUTMENT DETAILS" sheet

PLAN
1/4" = 1'-0"

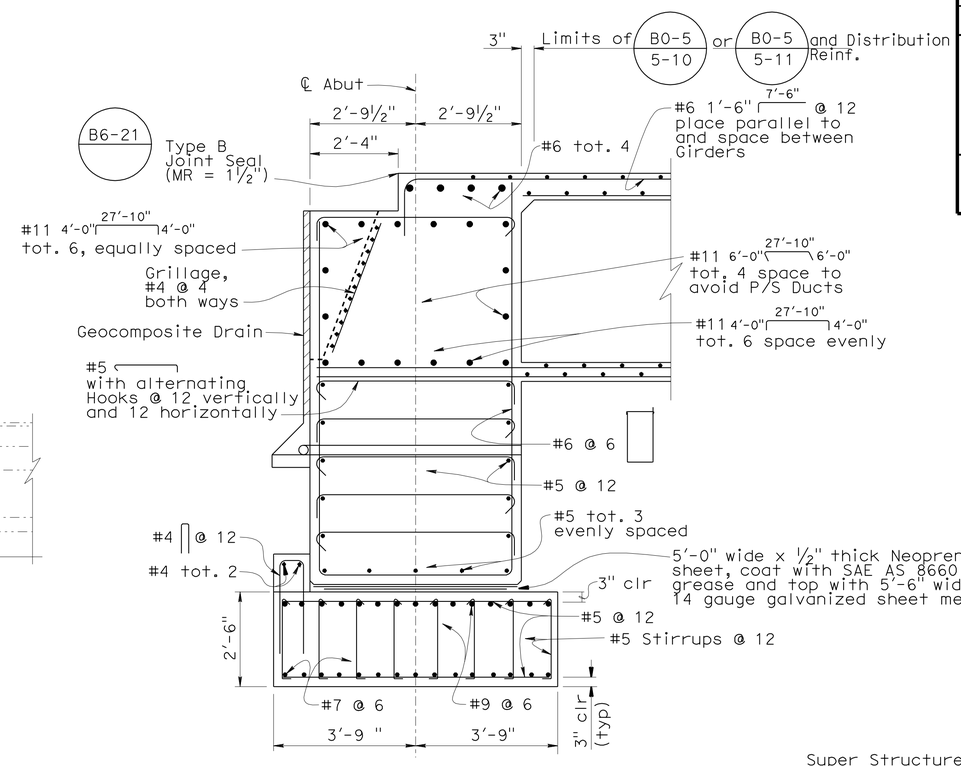

SECTION A-A
B6-21 B8-5
1/2" = 1'-0"

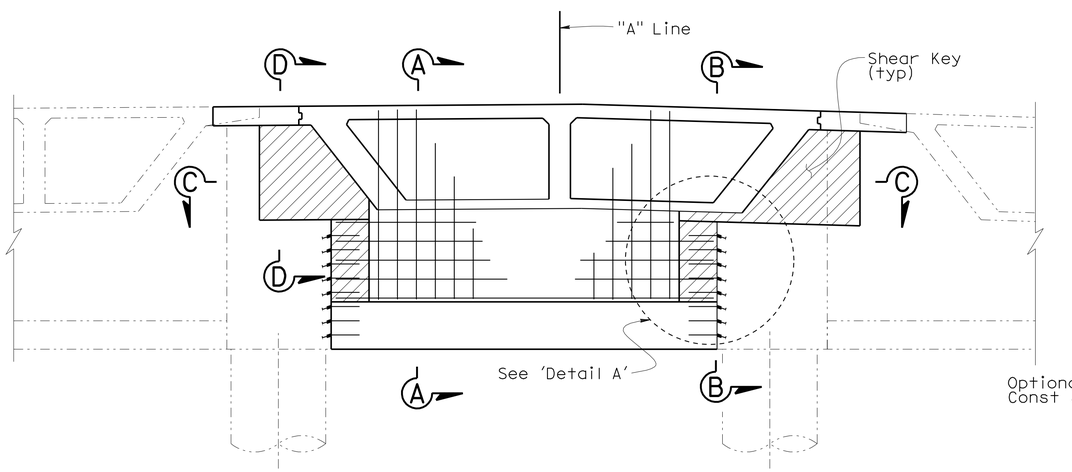

Indicates Abutment Closure Pour

ELEVATION
1/4" = 1'-0"

NOTES:

1. For 'Section C-C' and 'Section D-D', see "ABUTMENT DETAILS" sheet.
2. Abutment 1 shown, Abutment 3 similar.
3. Inside Face of New Abutment Stem Wall shall match Existing Stem Wall.
4. New Approach Slabs and Barrier Rail not shown

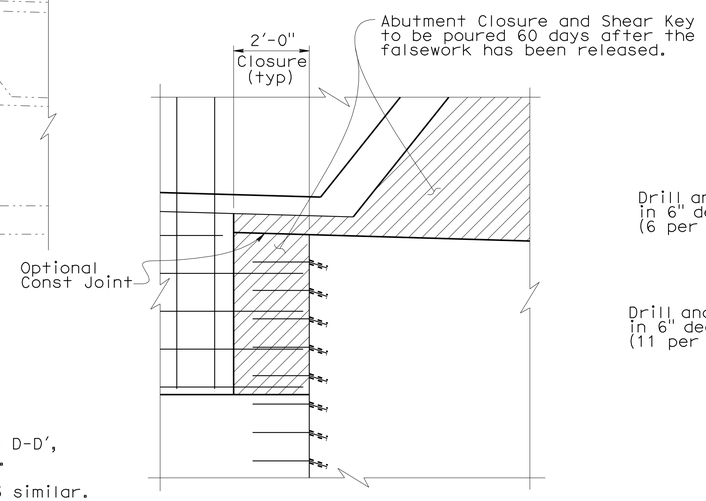

DETAIL A
1/2" = 1'-0"

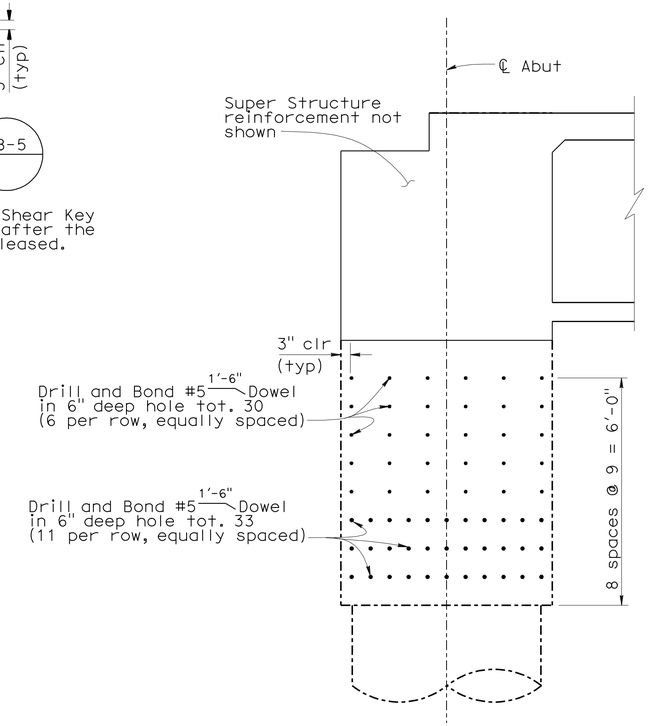

SECTION B-B
1/2" = 1'-0"

NOTE:
THE CONTRACTOR SHALL VERIFY ALL CONTROLLING FIELD DIMENSIONS BEFORE ORDERING OR FABRICATING ANY MATERIAL.

	BY	CHECKED
DESIGN	S. Galgiani	T. Skreslet
DETAILS	K. Kubo	T. Skreslet
QUANTITIES	S. Galgiani	L. Bahia

STATE OF CALIFORNIA
DEPARTMENT OF TRANSPORTATION

DIVISION OF ENGINEERING SERVICES
STRUCTURE DESIGN
DESIGN BRANCH 14

BRIDGE NO. 57-0635
POST MILE 6.06

TELEGRAPH CANYON ROAD UC (WIDEN)
ABUTMENT LAYOUT

STRUCTURES DESIGN DETAIL SHEET (ENGLISH) (REV. 09-01-10)

ORIGINAL SCALE IN INCHES FOR REDUCED PLANS 0 1 2 3

UNIT: 3613
PROJECT NUMBER & PHASE: 11000200501
CONTRACT NO.: 11-2T1811

DISREGARD PRINTS BEARING EARLIER REVISION DATES

REVISION DATES: 05-26-11 06-16-11 07-01-11 04-27-11

SHEET 4 OF 21

FILE => b_57-0635-f-abut_lo.dgn

USERNAME => s124496 DATE PLOTTED => 09-DEC-2011 TIME PLOTTED => 10:15

DIST	COUNTY	ROUTE	POST MILES TOTAL PROJECT	SHEET No.	TOTAL SHEETS
11	SD	54,805	1.8,5.5/9.4	537	635

Tony Skreslet 8-25-11
REGISTERED CIVIL ENGINEER DATE

12-5-11
PLANS APPROVAL DATE

REGISTERED PROFESSIONAL ENGINEER TONY SKRESLET No. C50676 Exp. 09-30-11 CIVIL STATE OF CALIFORNIA

The State of California or its officers or agents shall not be responsible for the accuracy or completeness of electronic copies of this plan sheet.

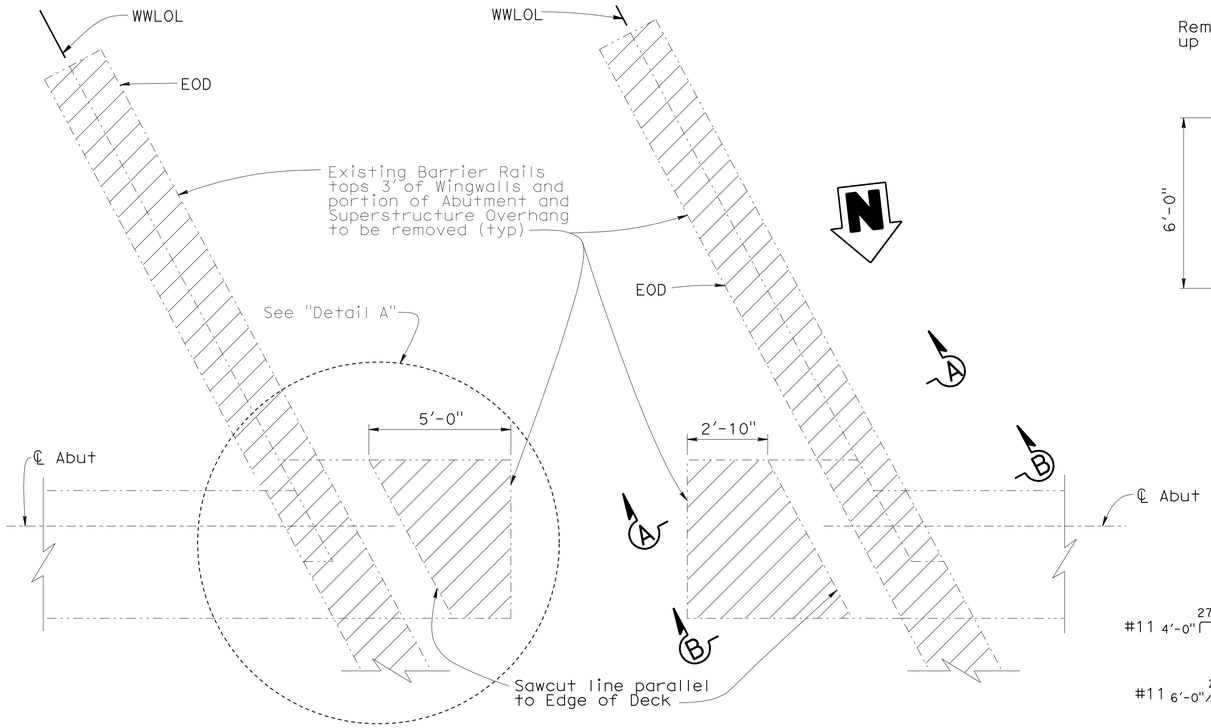

NOTE: Roughen Concrete surface to min 1/4" amplitude

PLAN-CONCRETE REMOVAL

3/8" = 1'-0"

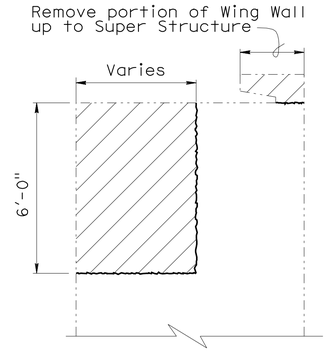

SECTION A-A

3/8" = 1'-0"

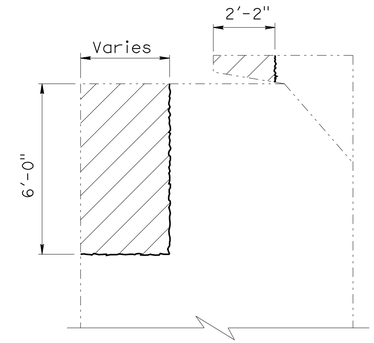

SECTION B-B

3/8" = 1'-0"

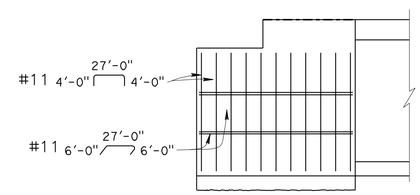

NOTES: 1. Adjust #11 Bars spacing as necessary as directed by Engineer.
2. Existing Reinforcement not shown.

SECTION D-D

3/8" = 1'-0"

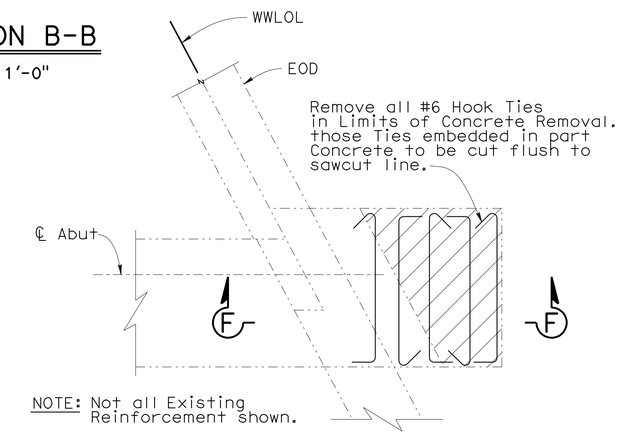

NOTE: Not all Existing Reinforcement shown.

DETAIL A

3/8" = 1'-0"

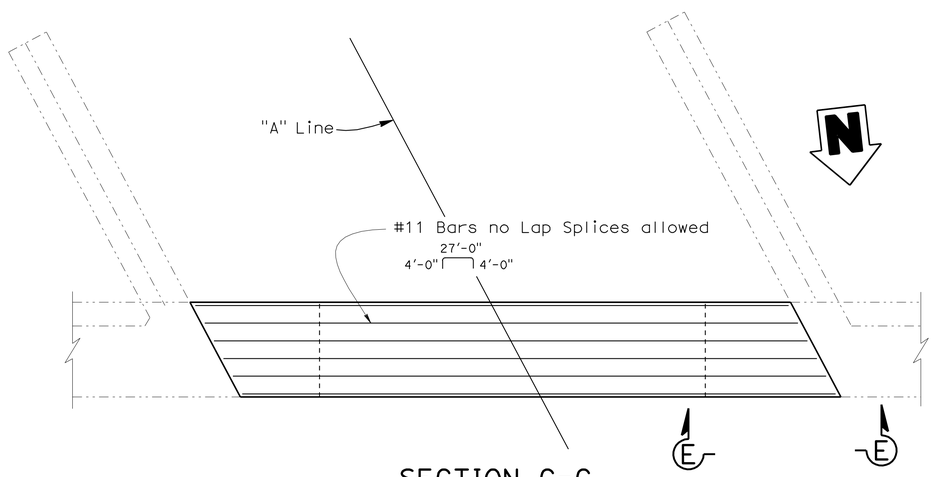

SECTION C-C

1/4" = 1'-0"

NOTE:
THE CONTRACTOR SHALL VERIFY ALL CONTROLLING FIELD DIMENSIONS BEFORE ORDERING OR FABRICATING ANY MATERIAL.

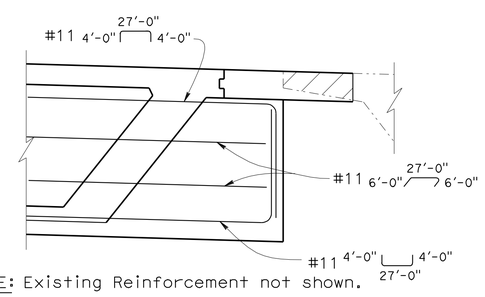

NOTE: Existing Reinforcement not shown.

VIEW E-E

3/8" = 1'-0"

LEGEND:

Indicates portion of Existing Abutment and Superstructure to be removed.

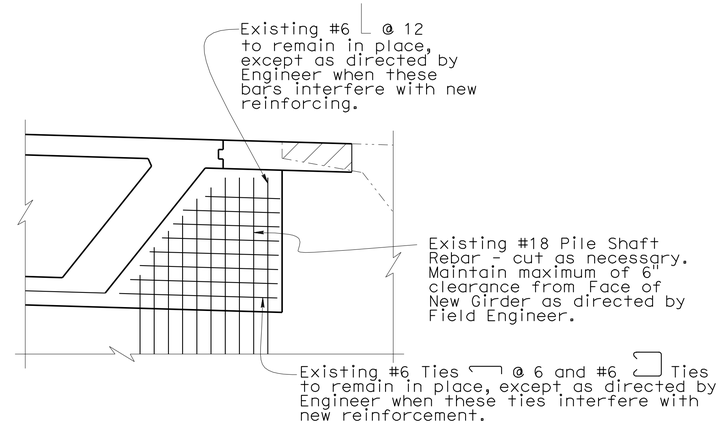

SECTION F-F

3/8" = 1'-0"

NOTE: Existing Reinforcement not shown.

NOTE:

For location of 'Section C-C' and 'Section D-D', see "ABUTMENT LAYOUT" sheet.

	BY	CHECKED
DESIGN	S. Galgiani	L. Bahia
DETAILS	L. Xiong	L. Bahia
QUANTITIES	S. Galgiani	L. Bahia

STATE OF CALIFORNIA
DEPARTMENT OF TRANSPORTATION

DIVISION OF ENGINEERING SERVICES
STRUCTURE DESIGN
DESIGN BRANCH 14

BRIDGE NO. 57-0635
POST MILE 6.06

TELEGRAPH CANYON ROAD UC (WIDEN)

ABUTMENT DETAILS

STRUCTURES DESIGN DETAIL SHEET (ENGLISH) (REV. 09-01-10)

ORIGINAL SCALE IN INCHES FOR REDUCED PLANS 0 1 2 3

UNIT: 3613
PROJECT NUMBER & PHASE: 11000200501
CONTRACT NO.: 11-2T1811

DISREGARD PRINTS BEARING EARLIER REVISION DATES

REVISION DATES: 05-27-11 06-16-11 04-12-11 04-22-11

SHEET 5 OF 21

FILE => b_57-0635-g-abut_det.dgn

USERNAME => s124496 DATE PLOTTED => 09-DEC-2011 TIME PLOTTED => 10:15

DIST	COUNTY	ROUTE	POST MILES TOTAL PROJECT	SHEET No.	TOTAL SHEETS
11	SD	54,805	1.8,5.5/9.4	538	635

Tony Skreslet 8-25-11
REGISTERED CIVIL ENGINEER DATE

12-5-11
PLANS APPROVAL DATE

REGISTERED PROFESSIONAL ENGINEER TONY SKRESLET No. C50676 Exp. 09-30-11 CIVIL STATE OF CALIFORNIA

The State of California or its officers or agents shall not be responsible for the accuracy or completeness of electronic copies of this plan sheet.

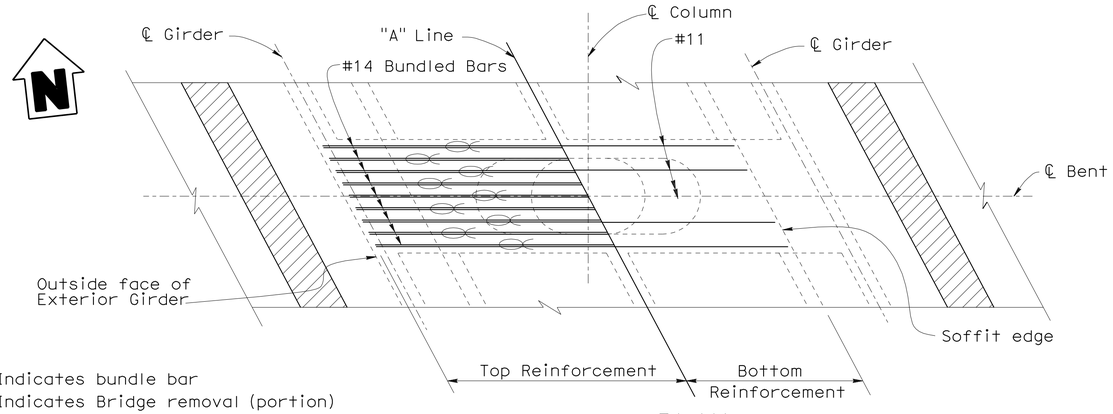

LEGEND:
- Indicates bundle bar
- Indicates Bridge removal (portion)
- Indicates Closure Pour

PLAN
1/4" = 1'-0"

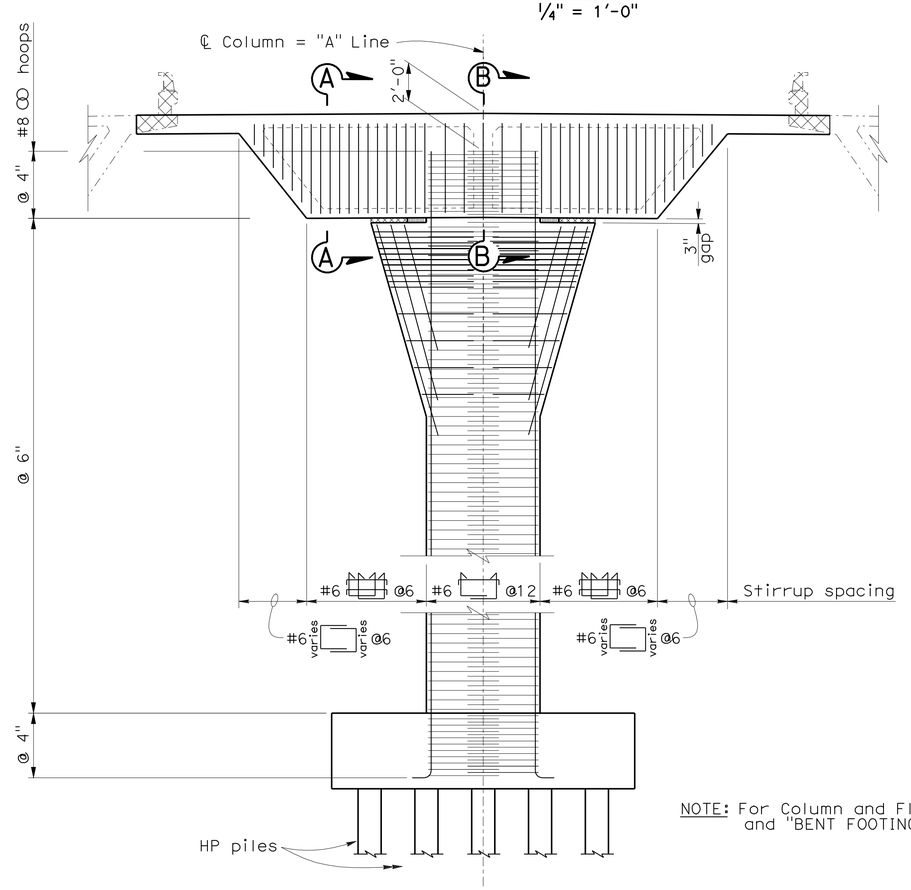

NOTE: For Column and Flare details, see "BENT DETAILS" and "BENT FOOTING DETAILS " sheet

ELEVATION
1/4" = 1'-0"

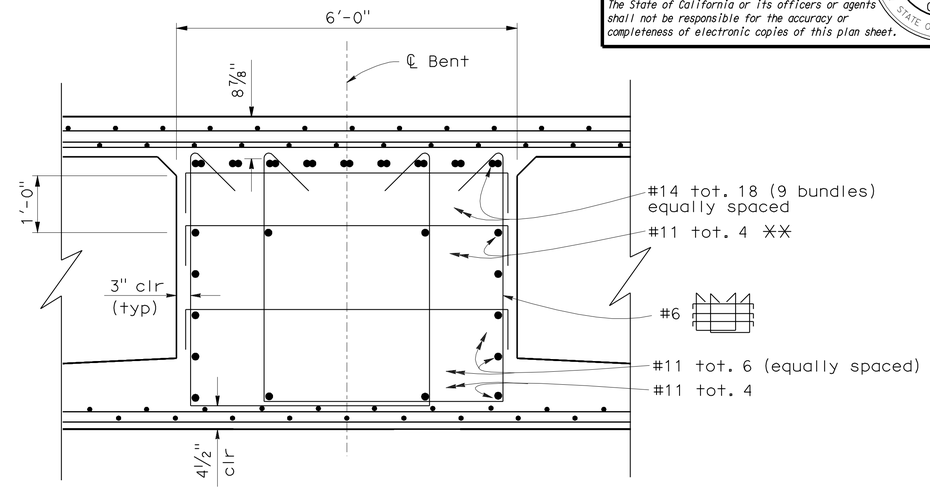

⁎⁎ Reinforcement may be bent or lowered to clear P/S ducts

SECTION A-A
3/4" = 1'-0"

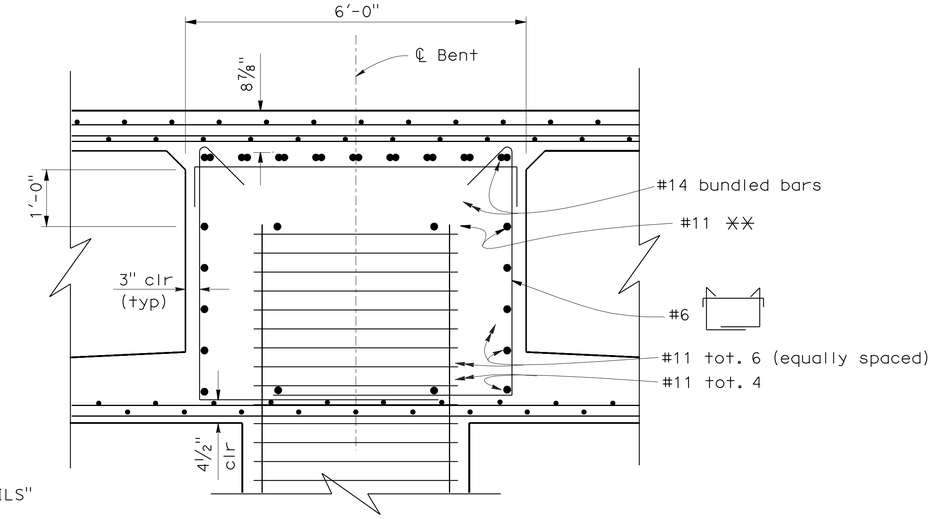

SECTION B-B
3/4" = 1'-0"

NOTE:
THE CONTRACTOR SHALL VERIFY ALL CONTROLLING FIELD DIMENSIONS BEFORE ORDERING OR FABRICATING ANY MATERIAL.

	BY	CHECKED
DESIGN	D. Dunrud	L. Bahia
DETAILS	KKubo / W. Zhang/CP	L. Bahia
QUANTITIES	S. Galgiani	L. Bahia

STATE OF CALIFORNIA
DEPARTMENT OF TRANSPORTATION

DIVISION OF ENGINEERING SERVICES
STRUCTURE DESIGN
DESIGN BRANCH 14

BRIDGE NO. 57-0635
POST MILE 6.06

TELEGRAPH CANYON ROAD UC (WIDEN)
BENT LAYOUT

STRUCTURES DESIGN DETAIL SHEET (ENGLISH) (REV. 09-01-10)

ORIGINAL SCALE IN INCHES FOR REDUCED PLANS 0 1 2 3

UNIT: 3613
PROJECT NUMBER & PHASE: 11000200501
CONTRACT NO.: 11-2T1811

DISREGARD PRINTS BEARING EARLIER REVISION DATES

REVISION DATES: 06-16-11 08-04-11 06-06-11 06-09-11

SHEET 6 OF 21

FILE => b_57-0635-g-bent_lo.dgn

USERNAME => s124496 DATE PLOTTED => 09-DEC-2011 TIME PLOTTED => 10:15

DIST	COUNTY	ROUTE	POST MILES TOTAL PROJECT	SHEET No.	TOTAL SHEETS
11	SD	54,805	1.8,5.5/9.4	539	635

Tony Skreslet
REGISTERED CIVIL ENGINEER
8-25-11
DATE

12-5-11
PLANS APPROVAL DATE

REGISTERED PROFESSIONAL ENGINEER
TONY SKRESLET
No. C50676
Exp. 09-30-11
CIVIL
STATE OF CALIFORNIA

The State of California or its officers or agents shall not be responsible for the accuracy or completeness of electronic copies of this plan sheet.

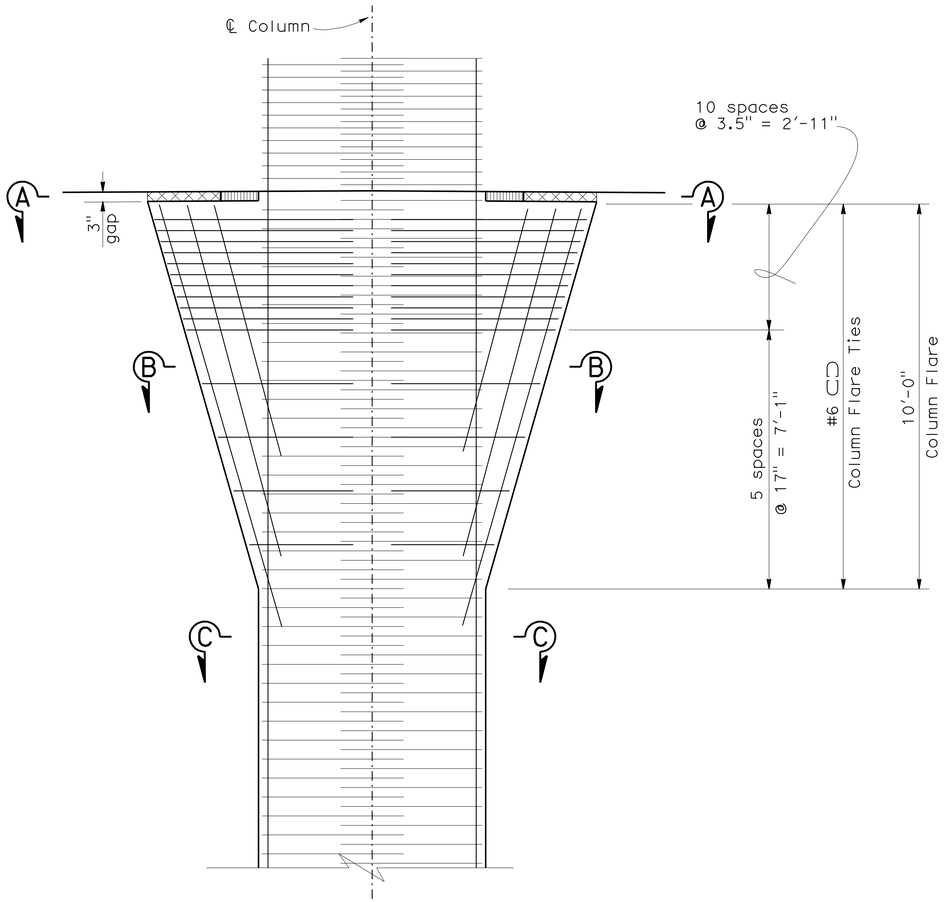

COLUMN ELEVATION
½" = 1'-0"

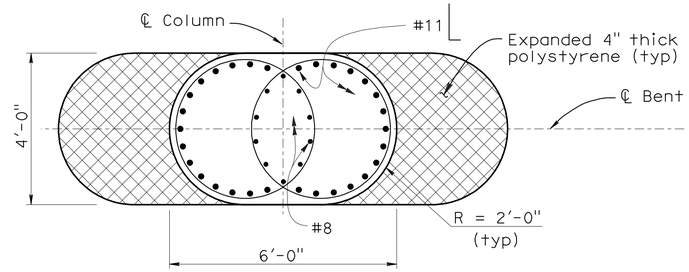

SECTION A-A
½" = 1'-0"

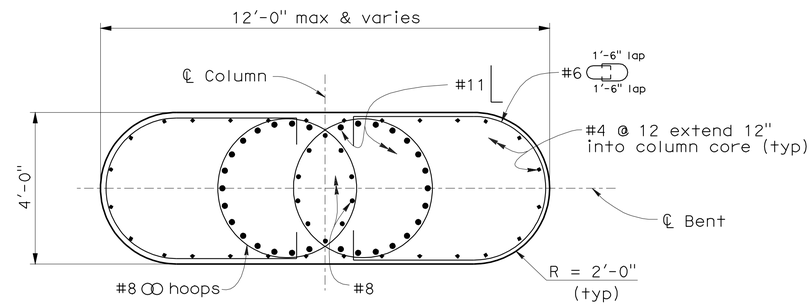

SECTION B-B
½" = 1'-0"

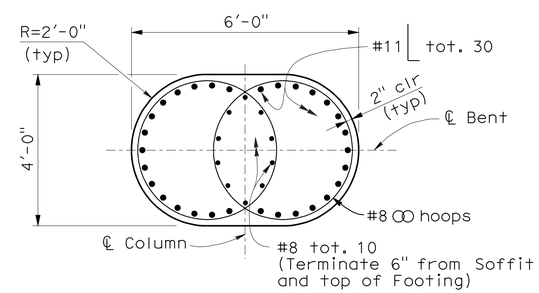

SECTION C-C
½" = 1'-0"

NOTE:
THE CONTRACTOR SHALL VERIFY ALL CONTROLLING FIELD DIMENSIONS BEFORE ORDERING OR FABRICATING ANY MATERIAL.

	BY	CHECKED
DESIGN	D. Dunrud	L. Bahia
DETAILS	KKubo / W. Zhang/CP	L. Bahia
QUANTITIES	S. Galgiani	L. Bahia

STATE OF CALIFORNIA
DEPARTMENT OF TRANSPORTATION

DIVISION OF ENGINEERING SERVICES
STRUCTURE DESIGN
DESIGN BRANCH 14

BRIDGE NO. 57-0635
POST MILE 6.06

TELEGRAPH CANYON ROAD UC (WIDEN)
BENT DETAILS

STRUCTURES DESIGN DETAIL SHEET (ENGLISH) (REV. 09-01-10)

ORIGINAL SCALE IN INCHES FOR REDUCED PLANS 0 1 2 3

UNIT: 3613
PROJECT NUMBER & PHASE: 11000200501
CONTRACT NO.: 11-2T1811

DISREGARD PRINTS BEARING EARLIER REVISION DATES

REVISION DATES: 06-06-11 04-18-11 06-06-11 06-06-11

SHEET 7 OF 21

FILE => b_57-0635-h-bent_det.dgn

USERNAME => s124496 DATE PLOTTED => 09-DEC-2011 TIME PLOTTED => 10:15

DIST	COUNTY	ROUTE	POST MILES TOTAL PROJECT	SHEET No.	TOTAL SHEETS
11	SD	54,805	1.8,5.5/9.4	540	635

Tony Skreslet 8-25-11
REGISTERED CIVIL ENGINEER DATE

12-5-11
PLANS APPROVAL DATE

REGISTERED PROFESSIONAL ENGINEER TONY SKRESLET No. C50676 Exp. 9-30-11 CIVIL STATE OF CALIFORNIA

The State of California or its officers or agents shall not be responsible for the accuracy or completeness of electronic copies of this plan sheet.

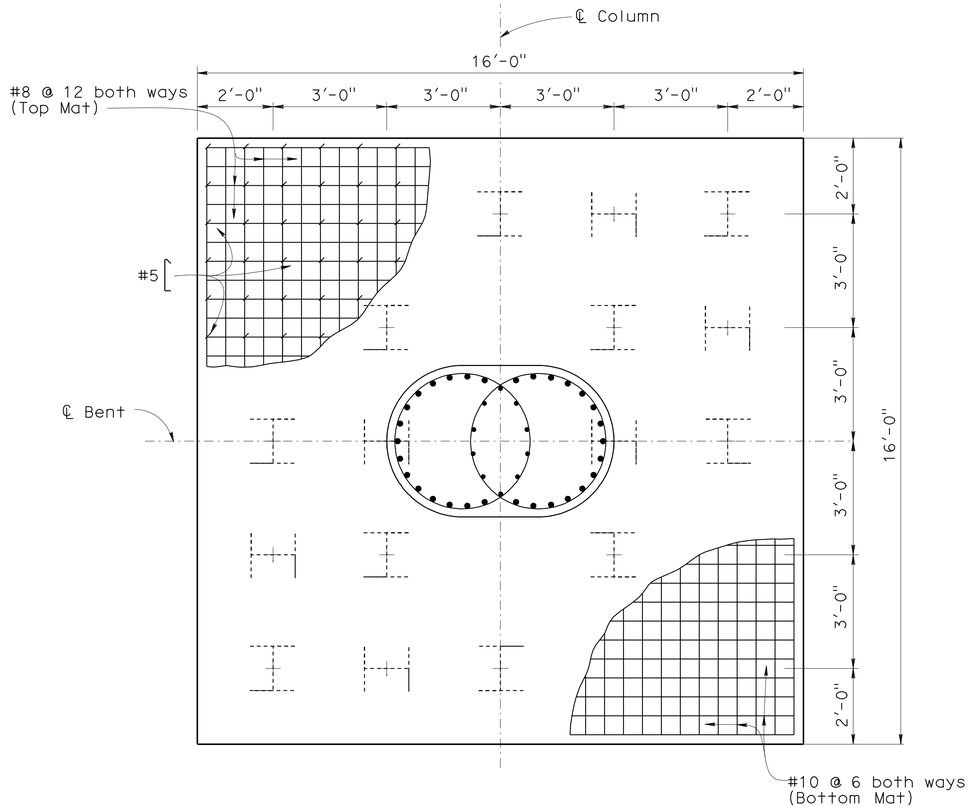

PLAN

½" = 1'-0"

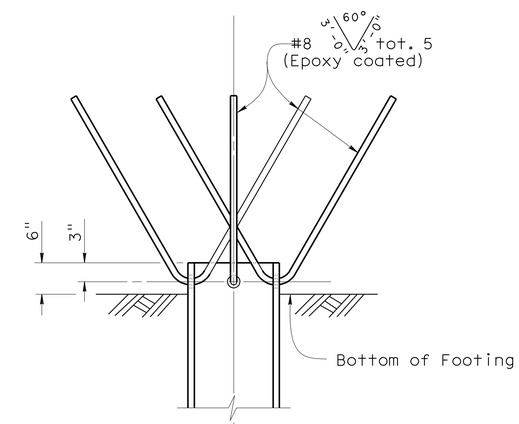

ELEVATION

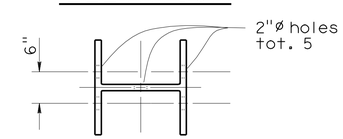

PLAN

STEEL PILE ANCHOR

No Scale

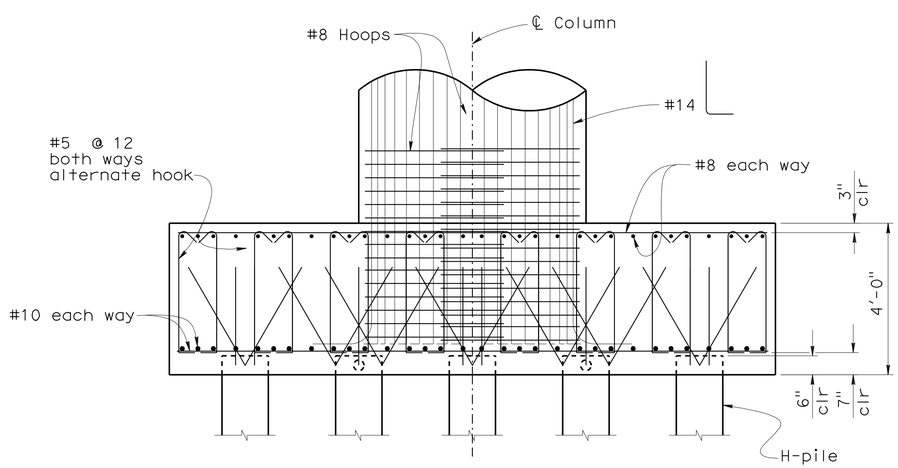

ELEVATION

½" = 1'-0"

NOTE:
THE CONTRACTOR SHALL VERIFY ALL CONTROLLING FIELD DIMENSIONS BEFORE ORDERING OR FABRICATING ANY MATERIAL.

	BY	CHECKED
DESIGN	D. Dunrud	L. Bahia
DETAILS	L. Xiong	L. Bahia
QUANTITIES	S. Galgiani	L. Bahia

STATE OF CALIFORNIA
DEPARTMENT OF TRANSPORTATION

DIVISION OF ENGINEERING SERVICES
STRUCTURE DESIGN
DESIGN BRANCH 14

BRIDGE NO. 57-0635
POST MILE 6.06

TELEGRAPH CANYON ROAD UC (WIDEN)
BENT FOOTING DETAILS

STRUCTURES DESIGN DETAIL SHEET (ENGLISH) (REV. 09-01-10)

ORIGINAL SCALE IN INCHES FOR REDUCED PLANS 0 1 2 3

UNIT: 3613
PROJECT NUMBER & PHASE: 11000200501
CONTRACT NO.: 11-2T1811

DISREGARD PRINTS BEARING EARLIER REVISION DATES

REVISION DATES: 05-27-11 03-08-11 03-29-11 04-12-11

SHEET 8 OF 21

FILE => b_57-0635-h-bent_fdt.dgn

USERNAME => s124496 DATE PLOTTED => 09-DEC-2011 TIME PLOTTED => 10:15

DIST	COUNTY	ROUTE	POST MILES TOTAL PROJECT	SHEET No.	TOTAL SHEETS
11	SD	54,805	1.8,5.5/9.4	541	635

Tony Skreslet 8-25-11
REGISTERED CIVIL ENGINEER DATE

12-5-11
PLANS APPROVAL DATE

REGISTERED PROFESSIONAL ENGINEER TONY SKRESLET No. C50676 Exp. 09-30-11 CIVIL STATE OF CALIFORNIA

The State of California or its officers or agents shall not be responsible for the accuracy or completeness of electronic copies of this plan sheet.

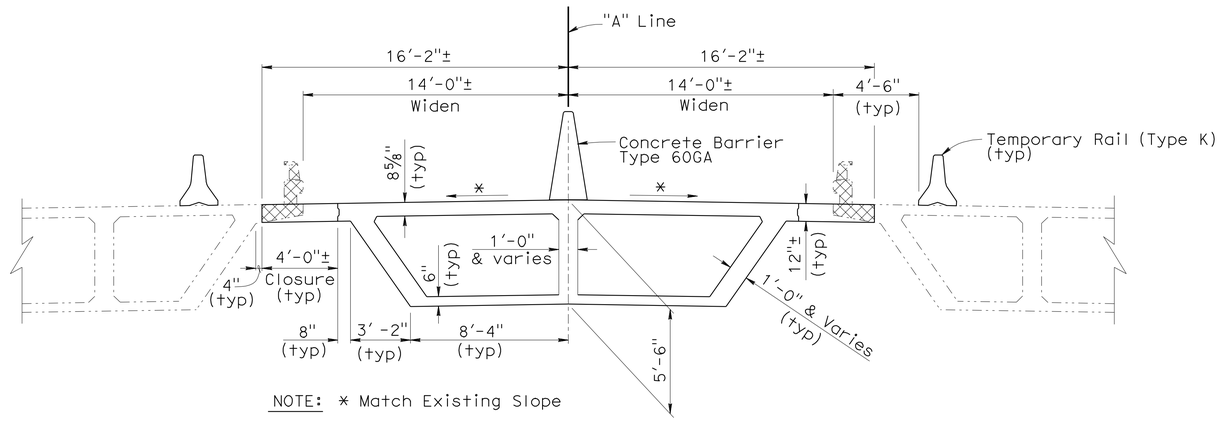

NOTE: * Match Existing Slope

TYPICAL SECTION

¼" = 1'-0"

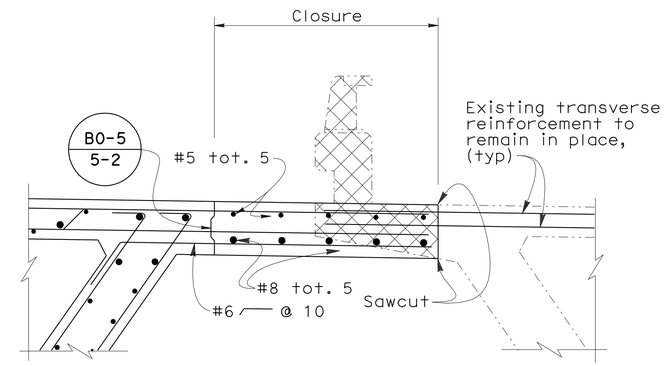

CLOSURE DETAIL

¾"=1'-0"

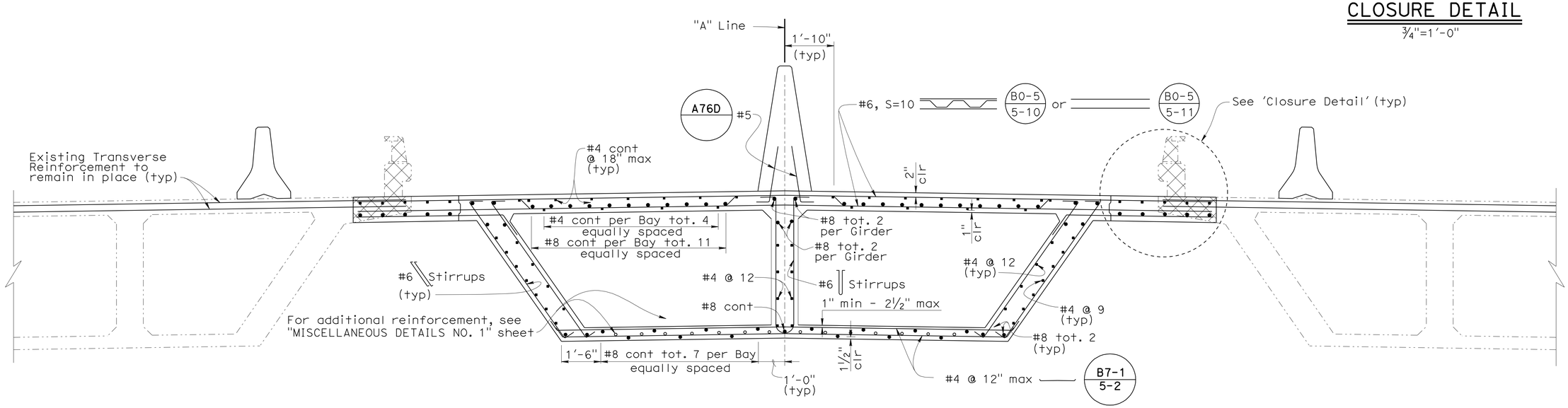

PART TYPICAL SECTION

½" = 1'-0"

A76A B0-5 B7-1 B8-5

NOTE:
THE CONTRACTOR SHALL VERIFY ALL CONTROLLING FIELD DIMENSIONS BEFORE ORDERING OR FABRICATING ANY MATERIAL.

LEGEND

Indicates limits of Barrier Rail and Concrete removal

	BY	CHECKED
DESIGN	L. Bahia	T. Skreslet
DETAILS	L. Xiong	T. Skreslet
QUANTITIES	S. Galgiani	L. Bahia

STATE OF CALIFORNIA
DEPARTMENT OF TRANSPORTATION

DIVISION OF ENGINEERING SERVICES
STRUCTURE DESIGN
DESIGN BRANCH 14

BRIDGE NO. 57-0635
POST MILE 6.06

TELEGRAPH CANYON ROAD UC (WIDEN)
TYPICAL SECTION

STRUCTURES DESIGN DETAIL SHEET (ENGLISH) (REV. 09-01-10)

ORIGINAL SCALE IN INCHES FOR REDUCED PLANS 0 1 2 3

UNIT: 3613
PROJECT NUMBER & PHASE: 11000200501
CONTRACT NO.: 11-2T1811

DISREGARD PRINTS BEARING EARLIER REVISION DATES

REVISION DATES: 06-06-11 06-16-11 08-01-11 05-14-11

SHEET 9 OF 21

FILE => b_57-0635-h-ts.dgn

USERNAME => s124496 DATE PLOTTED => 09-DEC-2011 TIME PLOTTED => 10:15

DIST	COUNTY	ROUTE	POST MILES TOTAL PROJECT	SHEET No.	TOTAL SHEETS
11	SD	54,805	1.8,5.5/9.4	542	635

Tony Skreslet 8-25-11
REGISTERED CIVIL ENGINEER DATE

12-5-11
PLANS APPROVAL DATE

REGISTERED PROFESSIONAL ENGINEER TONY SKRESLET No. C50676 Exp. 09-30-11 CIVIL STATE OF CALIFORNIA

The State of California or its officers or agents shall not be responsible for the accuracy or completeness of electronic copies of this plan sheet.

PRESTRESSING NOTES

270 KSI Low Relaxation Strand:

P_{jack} = 6950 kips

Anchor Set = 3/8 in

Total Number of Girders = 3

Distribution of prestress force (Pjack) between girders shall not exceed the ratio of 3:2. Maximum final force variation between girders shall not exceed 725 kips.

Concrete: f'_c = 5.0 psi @ 28 days

f'_{ci} = 3.5 psi @ time of stressing

Contractor shall submit elongation calculations based on initial stress at

⊠ = 0.900 times jacking stress.

One end stressing shall be performed from Abut 1 only

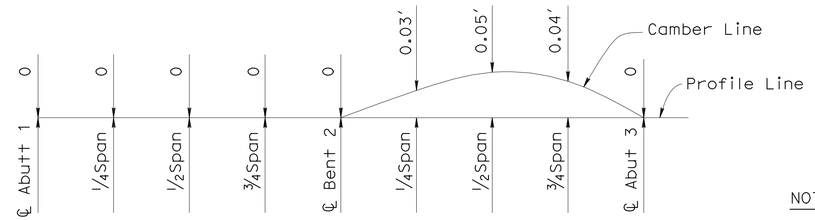

NOTE: Does not include allowance for falsework settlement

CAMBER DIAGRAM

No Scale

NOTES:

1. "L" is Girder length measured along ℄ Girders.
2. Cable Path is parabolic between Inflection Points.
3. Concrete Barrier not shown.

LEGEND

Indicates Girder stem width

⊠ Indicates theoretical point of no movement

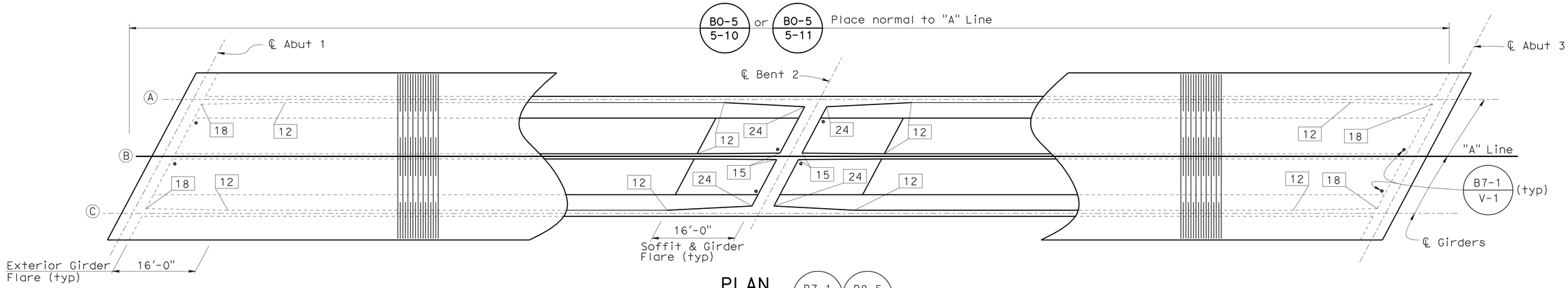

PLAN

1' = 10'-0" B7-1 B8-5

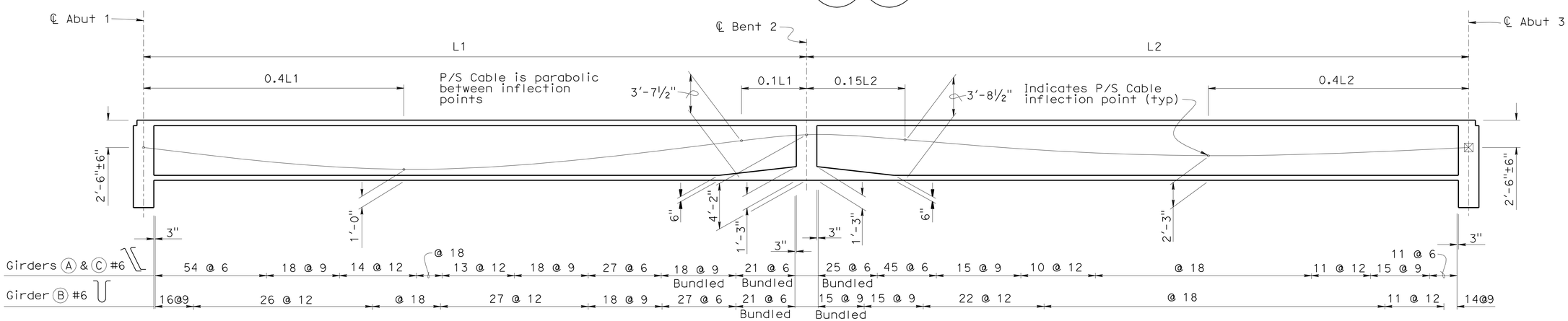

NOTE:
THE CONTRACTOR SHALL VERIFY ALL CONTROLLING FIELD DIMENSIONS BEFORE ORDERING OR FABRICATING ANY MATERIAL.

LONGITUDINAL SECTION B7-1

No Scale

	BY	CHECKED
DESIGN	L. Bahia	T. Skreslet
DETAILS	L. Xiong	T. Skreslet
QUANTITIES	S. Galgiani	L. Bahia

STATE OF CALIFORNIA
DEPARTMENT OF TRANSPORTATION

DIVISION OF ENGINEERING SERVICES
STRUCTURE DESIGN
DESIGN BRANCH 14

BRIDGE NO. 57-0635
POST MILE 6.06

TELEGRAPH CANYON ROAD UC (WIDEN)
GIRDER LAYOUT

STRUCTURES DESIGN DETAIL SHEET (ENGLISH) (REV. 09-01-10)

ORIGINAL SCALE IN INCHES FOR REDUCED PLANS 0 1 2 3

UNIT: 3613
PROJECT NUMBER & PHASE: 11000200501
CONTRACT NO.: 11-2T1811

DISREGARD PRINTS BEARING EARLIER REVISION DATES

REVISION DATES 06-06-11 06-13-11 04-13-11 04-21-11

SHEET 10 OF 21

FILE => b_57-0635-1-gl.dgn

USERNAME => s124496 DATE PLOTTED => 09-DEC-2011 TIME PLOTTED => 10:16

DIST.	COUNTY	ROUTE	POST MILES TOTAL PROJECT	SHEET NO.	TOTAL SHEETS
11	SD	54,805	1.8,5.5/9.4	543	635

Tony Skreslet 8-25-11
REGISTERED ENGINEER - CIVIL
12-5-11
PLANS APPROVAL DATE

REGISTERED PROFESSIONAL ENGINEER TONY SKRESLET No. C50676 Exp. 09-30-11 CIVIL STATE OF CALIFORNIA

The State of California or its officers or agents shall not be responsible for the accuracy or completeness of electronic copies of this plan sheet.

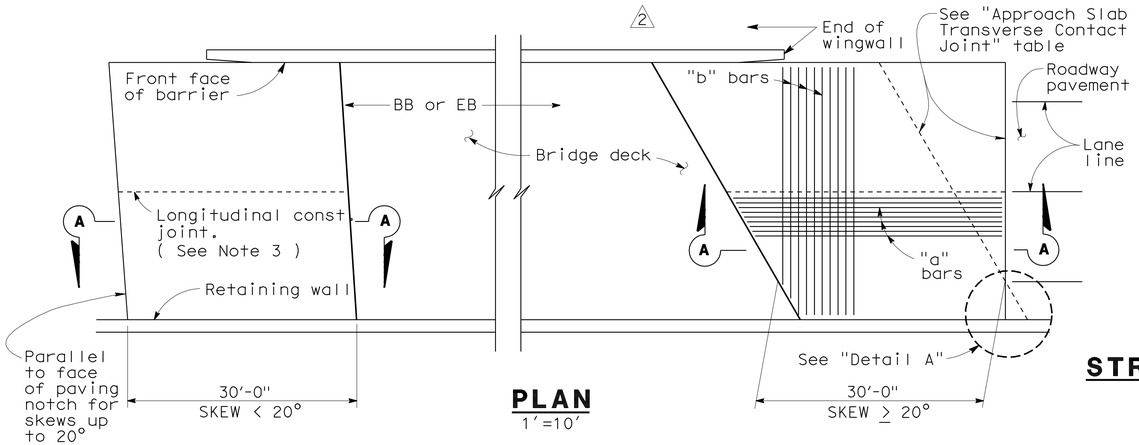

PLAN
1"=10'

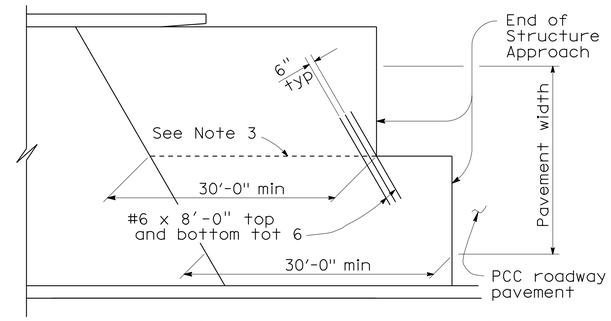

STRUCTURE APPROACH - END STAGGER DETAIL
No Scale

APPROACH SLAB TRANSVERSE CONTACT JOINT		
APPROACH SKEW	WITH AC ROADWAY PAVEMENT	WITH PCC ROADWAY PAVEMENT
< 20°	Parallel to face of paving notch	Parallel to face of paving notch
20°- 45°	Parallel to face of P N use (Detail A)	Stagger lines 24' to 36' apart
> 45°	Parallel to face of P N use (Detail A)	Stagger at each lane line

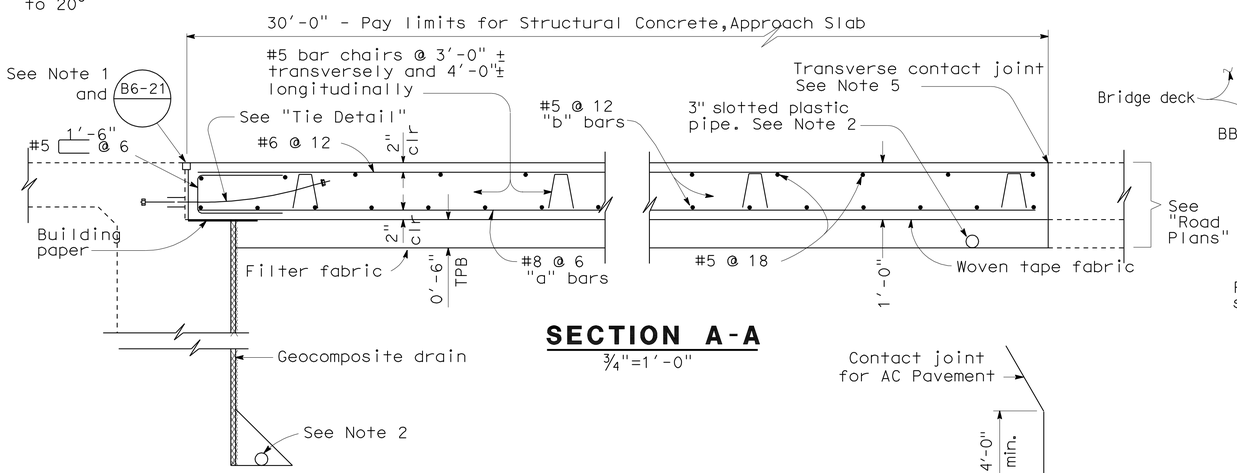

SECTION A-A
¾"=1'-0"

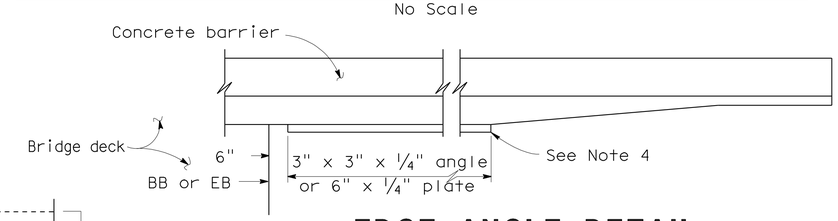

EDGE ANGLE DETAIL
½"=1'-0"

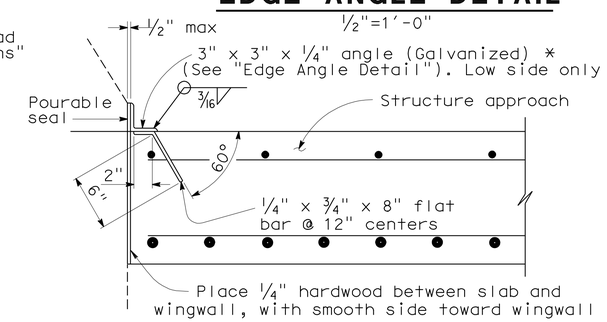

*(TO BE USED WITH TYPE 25 OR TYPE 27 CONCRETE BARRIER)

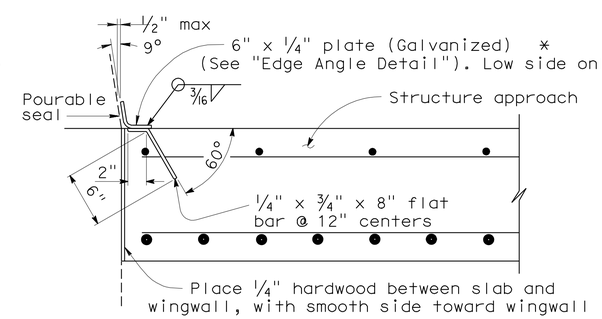

*(TO BE USED WITH TYPE 732 OR TYPE 736 CONCRETE BARRIER)

DETAIL B
1½"=1'-0"

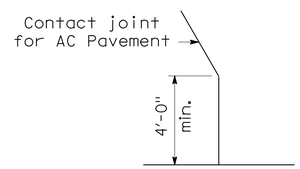

DETAIL A
No Scale

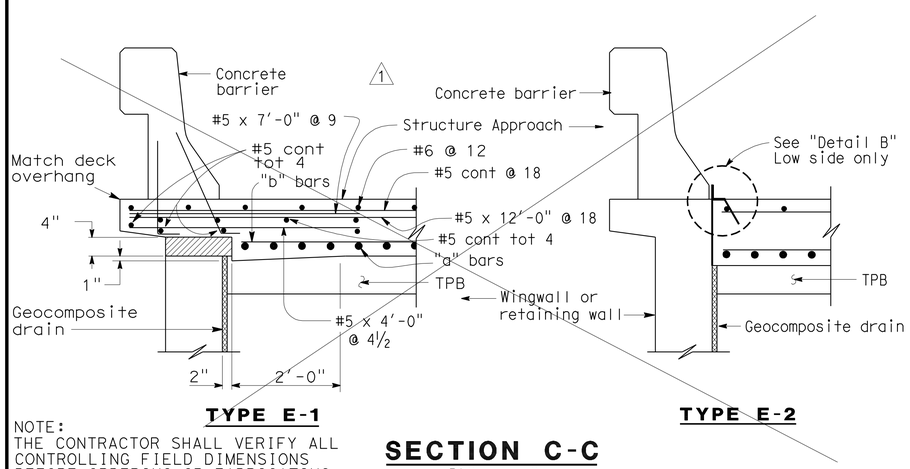

TYPE E-1 TYPE E-2

SECTION C-C
¾"=1'-0"

NOTE:
THE CONTRACTOR SHALL VERIFY ALL CONTROLLING FIELD DIMENSIONS BEFORE ORDERING OR FABRICATING ANY MATERIAL.

(Type E-1 to be used, unless otherwise shown on plans)

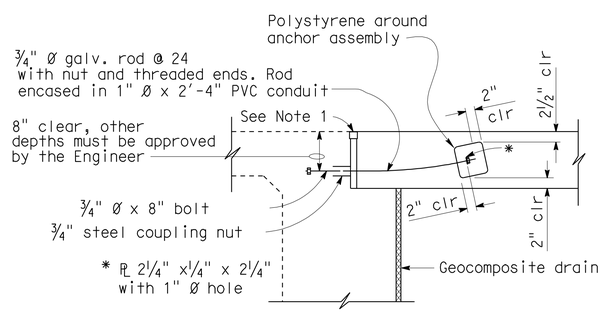

TIE DETAIL
¾"=1'-0"

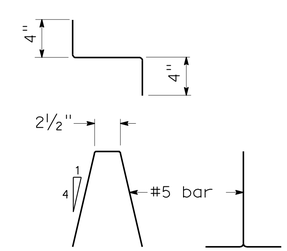

BAR CHAIR DETAIL
1½"=1'-0"

NOTES:

1. For details not noted or shown, see Structure Plans.
2. For drainage details, see "Structure Approach Drainage Details" sheet.
3. Longitudinal construction joints, when permitted by the Engineer, shall be located on lane lines.
4. End angle or plate at beginning of barrier transition, end of wingwall or end of structure approach, as applicable.
5. For transverse contact joint with new PCC paving, refer to Standard Plan P10.
6. At the contractor's option, approach slab transverse reinforcement may be placed parallel to paving notch. Spacing of transverse reinforcement is measured along ℄ roadway.

Polystyrene to be removed.

STANDARD DRAWING

FILE NO. xs3-180e

APPROVED BY M. Ha (RESPONSIBLE TECHNICAL SPECIALIST) — APPROVAL DATE 8-12-08

RELEASED BY O. Alcantara (RESPONSIBLE OFFICE CHIEF) — RELEASE DATE 8-12-08

1 Deleted Detail
2 Modified Detail

STATE OF CALIFORNIA DEPARTMENT OF TRANSPORTATION

DIVISION OF ENGINEERING SERVICES

BRIDGE NO. 57-0635
POST MILE 6.06

TELEGRAPH CANYON ROAD UC (WIDEN)
STRUCTURE APPROACH TYPE N(30D)

DS OSD 2147A (ENGLISH STANDARD DRAWING "XS" BORDER REV. 01/11/08)

ORIGINAL SCALE IN INCHES FOR REDUCED PLANS 0 1 2 3

CU 3613
PN&Phase 11000200501

DISREGARD PRINTS BEARING EARLIER REVISION DATES

REVISION DATES (PRELIMINARY STAGE ONLY) 01-27-11 04-12-11

SHEET 11 OF 21

USERNAME => s124496

b_57-0635-q-sapptyp_n.dgn

DATE PLOTTED => 09-DEC-2011 TIME PLOTTED => 10:16

DIST.	COUNTY	ROUTE	MILE POST TOTAL PROJECT	SHEET NO.	TOTAL SHEETS
11	SD	54,805	1.8,5.5/9.4	544	635

Tony Skreslet 8-25-11
REGISTERED ENGINEER - CIVIL

12-5-11
PLANS APPROVAL DATE

REGISTERED PROFESSIONAL ENGINEER TONY SKRESLET No. C50676 Exp. 09-30-11 CIVIL STATE OF CALIFORNIA

The State of California or its officers or agents shall not be responsible for the accuracy or completeness of electronic copies of this plan sheet.

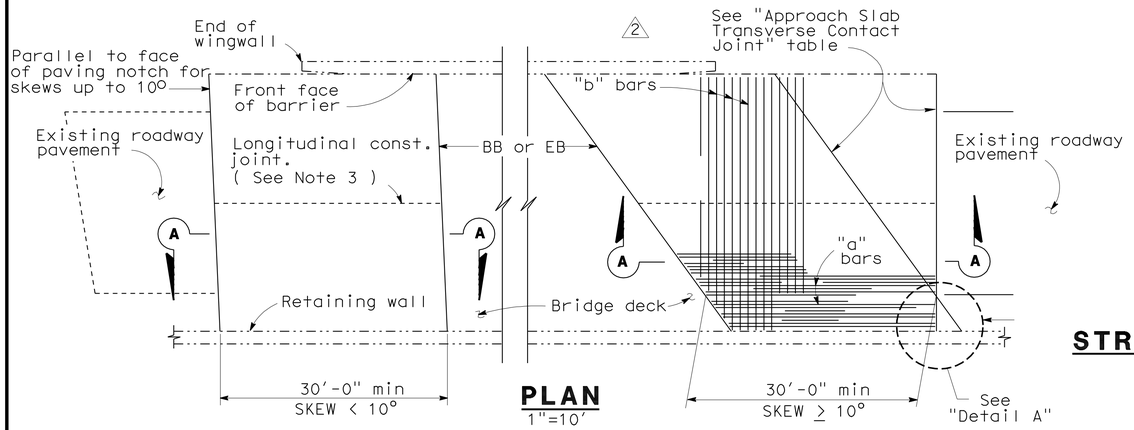

PLAN
1"=10'

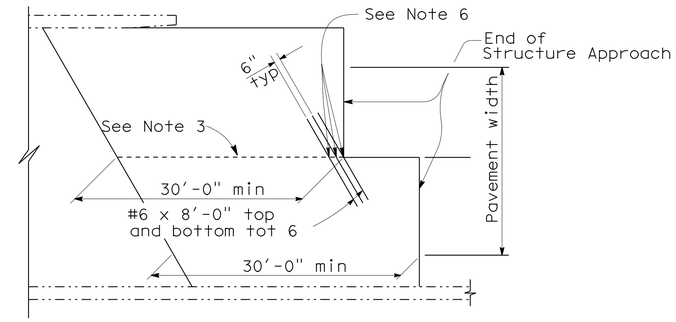

STRUCTURE APPROACH - END STAGGER DETAIL
No Scale

APPROACH SLAB TRANSVERSE CONTACT JOINT		
APPROACH SKEW	WITH AC ROADWAY PAVEMENT	WITH PCC ROADWAY PAVEMENT
< 10°	Parallel to face of paving notch	Parallel to face of paving notch
10° - 45°	Parallel to face of P N use (Detail A)	Stagger lines 24' to 36' apart
> 45°	Parallel to face of P N use (Detail A)	Stagger at each lane line

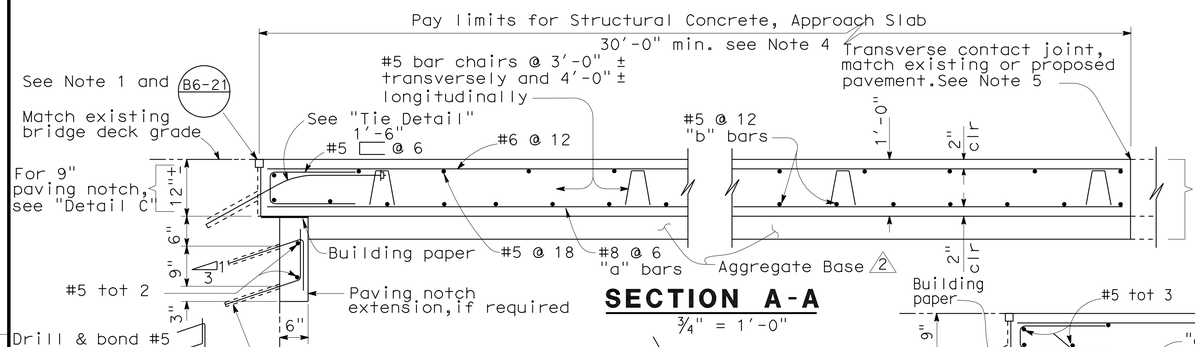

SECTION A-A
¾" = 1'-0"

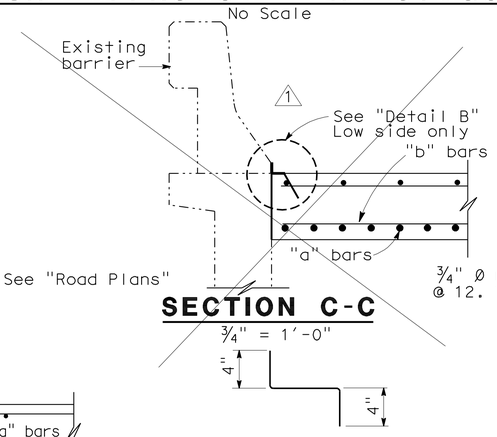

SECTION C-C
¾" = 1'-0"

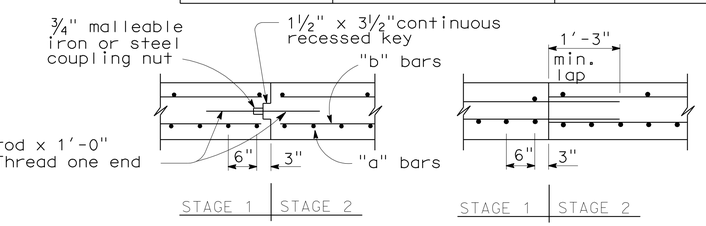

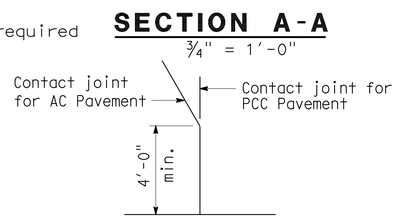

DETAIL A
No Scale

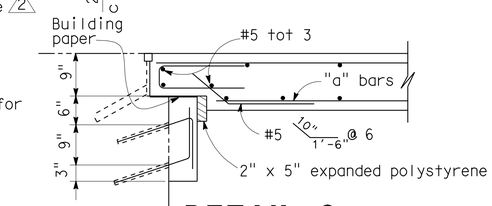

DETAIL C
¾" = 1'-0"

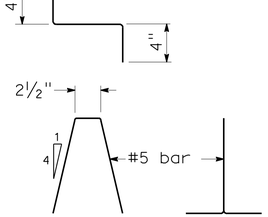

BAR CHAIR DETAIL
1½" = 1'-0"

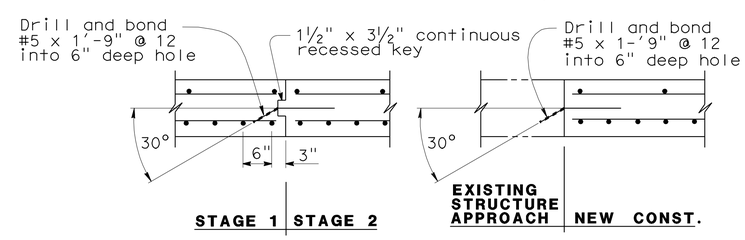

LONGITUDINAL CONSTRUCTION JOINT ALTERNATIVES
¾" = 1'-0"

NOTE: For details not shown, see "Section A-A". NOTE: For details not shown, see "Section A-A".

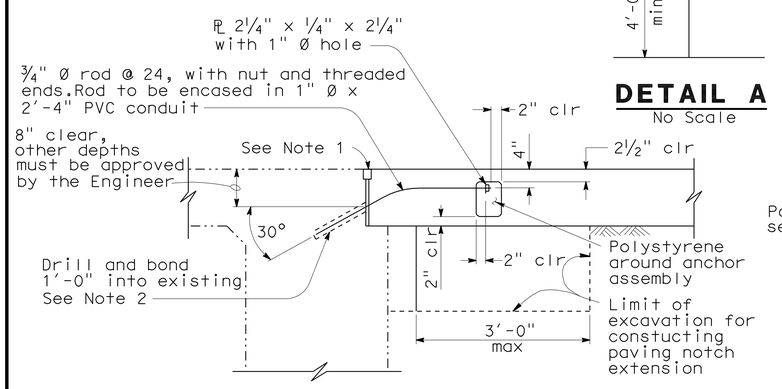

TIE DETAIL
¾" = 1'-0"

NOTE:
THE CONTRACTOR SHALL VERIFY ALL CONTROLLING FIELD DIMENSIONS BEFORE ORDERING OR FABRICATING ANY MATERIAL.

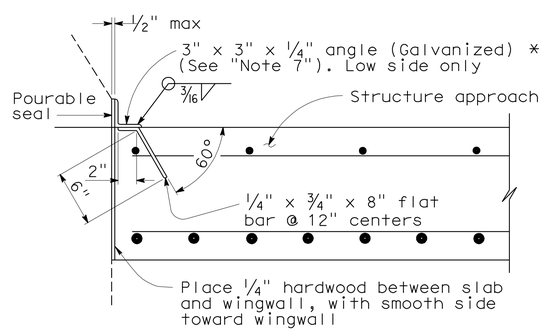

*(TO BE USED WITH TYPE 25 OR TYPE 27 CONCRETE BARRIER)

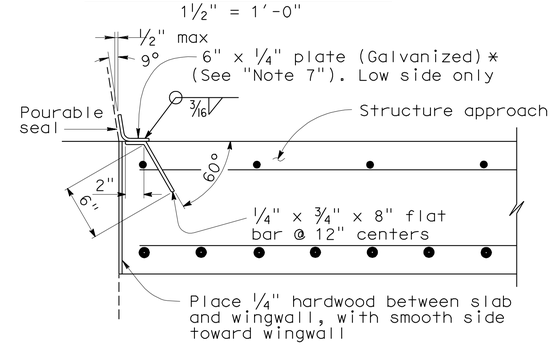

*(TO BE USED WITH TYPE 732 OR TYPE 736 CONCRETE BARRIER)

DETAIL B
1½" = 1'-0"

NOTES:

1. For details not shown or noted, see Structure Plans. Adjust bar reinforcement to clear a sawcut for sealed joint, when required.
2. Space to avoid existing prestress anchorages and main reinforcement.
3. Longitudinal construction joints, when permitted by the Engineer, shall be located on lane lines.
4. Transverse contact joint shall be a minimum of 5'-0" from an existing or constructed weakened plane joint.
5. For transverse contact joint with new PCC paving, refer to Standard Plan P10.
6. Couplers are required for stage construction.
7. End angle or plate at beginning of barrier transition, end of wingwall or end of structure approach as applicable.

STANDARD DRAWING

RELEASE DATE 3/14/05	DESIGN	BY M.TRAFFALIS	CHECKED E.THORKILDSEN	RELEASED BY
FILE NO. xs3-140e	DETAILS	BY R.YEE	CHECKED E.THORKILDSEN	
	SUBMITTED	BY M.HA	DRAWING DATE 8/92	OFFICE CHIEF

1 Deleted Detail
2 Modified Detail

STATE OF CALIFORNIA
DEPARTMENT OF TRANSPORTATION

DIVISION OF ENGINEERING SERVICES

BRIDGE NO.	TELEGRAPH CANYON ROAD UC (WIDEN)
57-0635	
MILE POST 6.06	STRUCTURE APPROACH TYPE R(30D)

DS OSD 2147A (ENGLISH) (REV. X/XX/XX)

ORIGINAL SCALE IN INCHES FOR REDUCED PLANS 0 1 2 3

CU 3613
PN & PHASE 11000200501

DISREGARD PRINTS BEARING EARLIER REVISION DATES

REVISION DATES (PRELIMINARY STAGE ONLY) 1-27-11 03-25-11 03-24-11 04-12-11

SHEET 12 OF 21

USERNAME => s124496

b_57-0635-q-sapptx

DATE PLOTTED => 09-DEC-2011 TIME PLOTTED => 10:16

DIST	COUNTY	ROUTE	POST MILES TOTAL PROJECT	SHEET No.	TOTAL SHEETS
11	SD	54,805	1.8,5.5/9.4	545	635

Tony Skreslet 8-25-11
REGISTERED CIVIL ENGINEER DATE

12-5-11
PLANS APPROVAL DATE

REGISTERED PROFESSIONAL ENGINEER
TONY SKRESLET
No. C50676
Exp. 09-30-11
CIVIL
STATE OF CALIFORNIA

The State of California or its officers or agents shall not be responsible for the accuracy or completeness of electronic copies of this plan sheet.

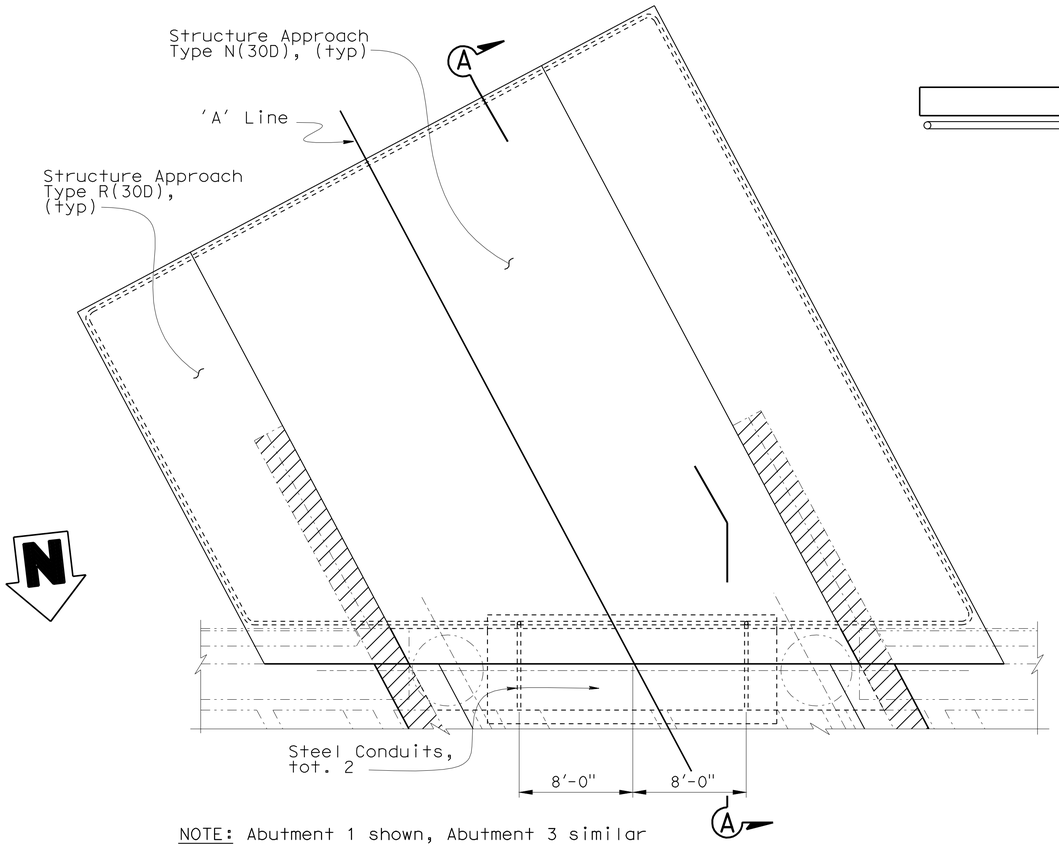

NOTE: Abutment 1 shown, Abutment 3 similar

PLAN
No Scale

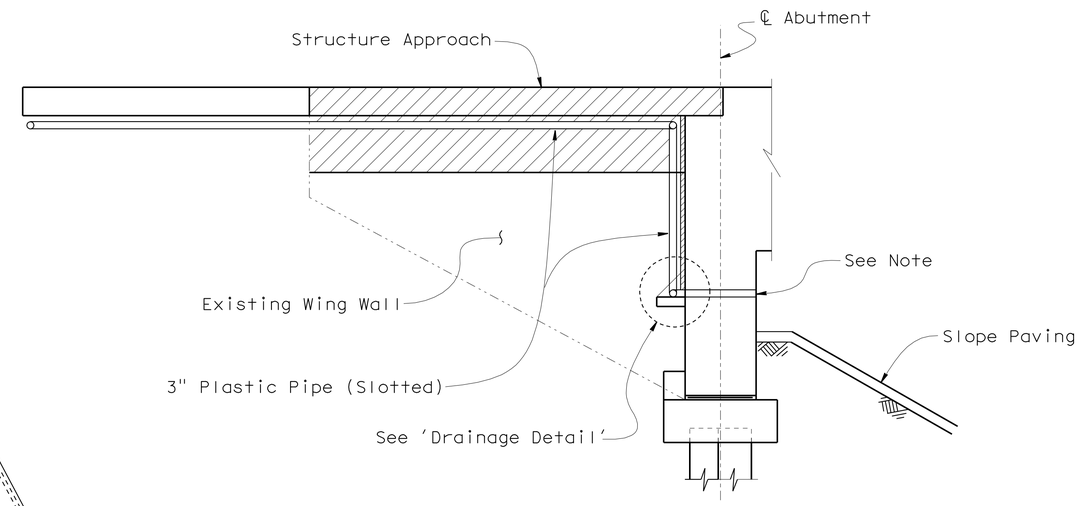

SECTION A-A
No Scale

NOTE: 6" square aluminum or galvanized steel wire 1/2" mesh hardware cloth, minimum wire diameter 0.025". Anchor firmly to Abutment face

LEGEND:

Indicates top 3' of Wing Wall and portion of Overhang to be removed

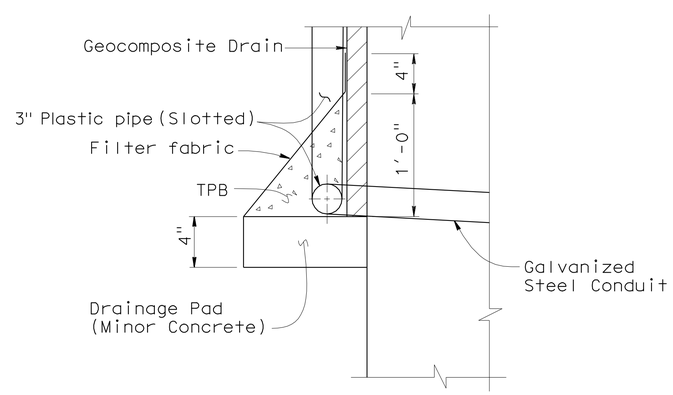

DRAINAGE DETAIL
No Scale

DESIGN	BY T. Skreslet	CHECKED L. Bahia	
DETAILS	BY JMP/T. Nguyen	CHECKED L. Bahia	
QUANTITIES	BY S. Galgiani	CHECKED L. Bahia	

STATE OF CALIFORNIA
DEPARTMENT OF TRANSPORTATION

DIVISION OF ENGINEERING SERVICES
STRUCTURE DESIGN
DESIGN BRANCH 14

BRIDGE NO. 57-0635
POST MILE 6.06

TELEGRAPH CANYON ROAD UC (WIDEN)
STRUCTURE APPROACH DRAINAGE DETAILS

STRUCTURES DESIGN DETAIL SHEET (ENGLISH) (REV. 09-01-10)

ORIGINAL SCALE IN INCHES FOR REDUCED PLANS 0 1 2 3

UNIT: 3613
PROJECT NUMBER & PHASE: 11000200501
CONTRACT NO.: 11-2T1811

DISREGARD PRINTS BEARING EARLIER REVISION DATES

REVISION DATES: 07-07-11 07-08-11 07-12-11 08-10-11

SHEET 13 OF 21

FILE => b_57-0635-r-sadd.dgn

USERNAME => s124496 DATE PLOTTED => 09-DEC-2011 TIME PLOTTED => 10:16

DIST	COUNTY	ROUTE	POST MILES TOTAL PROJECT	SHEET No.	TOTAL SHEETS
11	SD	54,805	1.8,5.5/9.4	546	635

Tony Skreslet 8-25-11
REGISTERED CIVIL ENGINEER DATE

12-5-11
PLANS APPROVAL DATE

REGISTERED PROFESSIONAL ENGINEER TONY SKRESLET No. C50676 Exp. 09-30-11 CIVIL STATE OF CALIFORNIA

The State of California or its officers or agents shall not be responsible for the accuracy or completeness of electronic copies of this plan sheet.

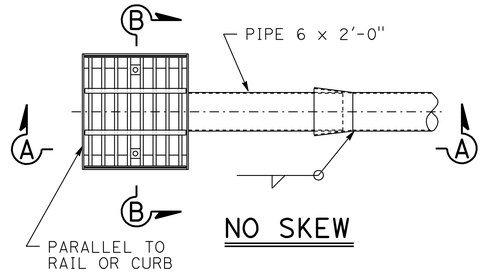

NO SKEW

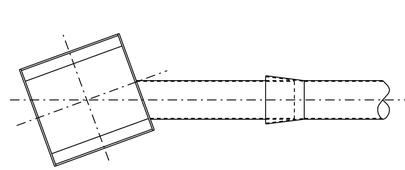

SKEW TO 20°

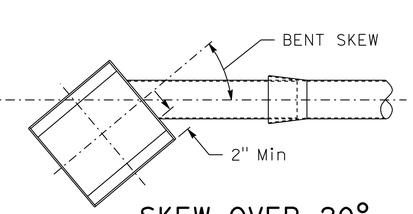

SKEW OVER 20°

PLAN-DECK DRAIN ASSEMBLY

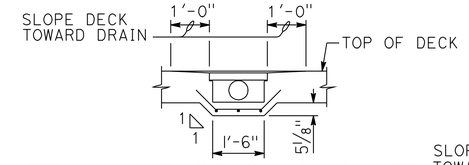

SECTION C-C

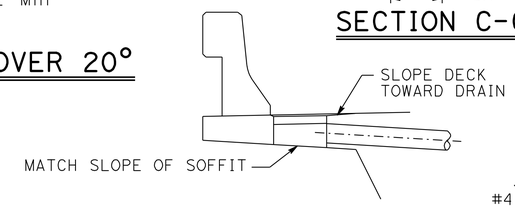

DRAIN FLUSH W/OVERHANG

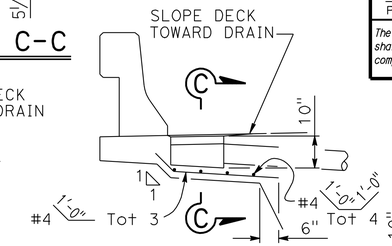

DRAIN W/HAUNCH OVERHANG

ELEVATION-DECK DRAIN LOCATIONS

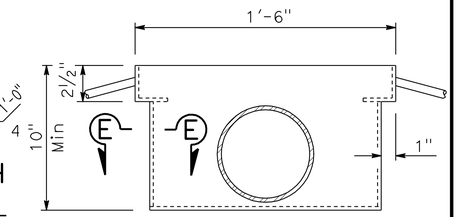

VIEW D-D

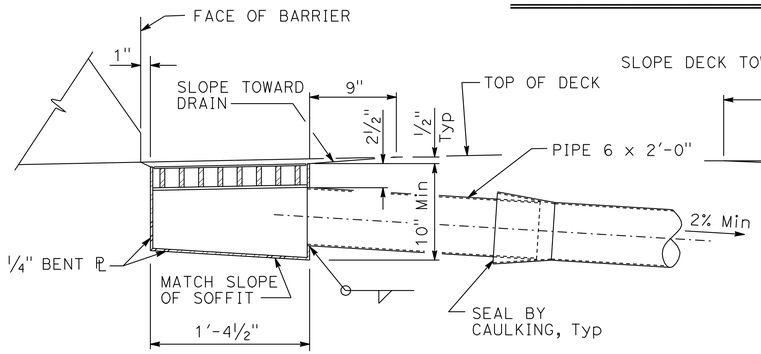

SECTION A-A

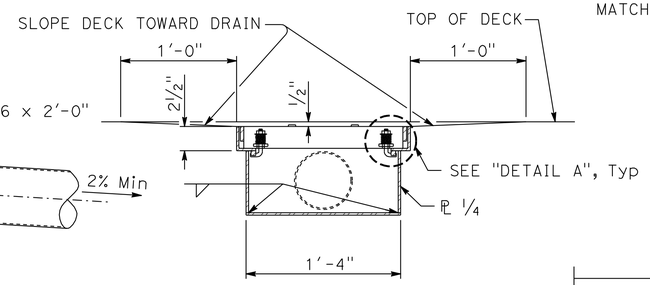

SECTION B-B

DECK DRAIN ASSEMBLY DETAIL

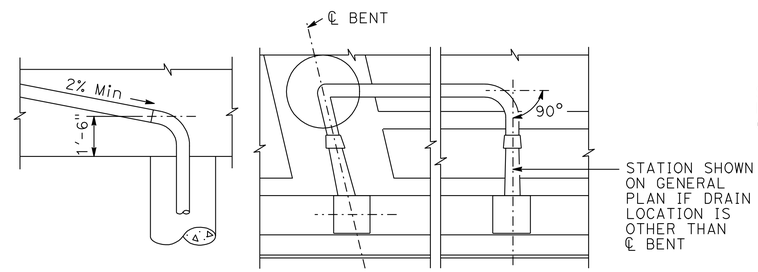

VERTICAL HORIZONTAL

DRAIN PIPE ALIGNMENT

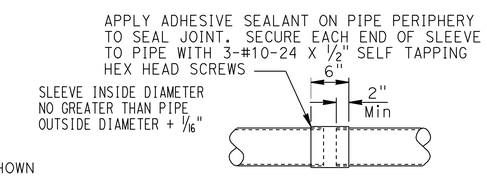

SLEEVE CONNECTION

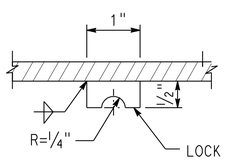

LOCK BAR

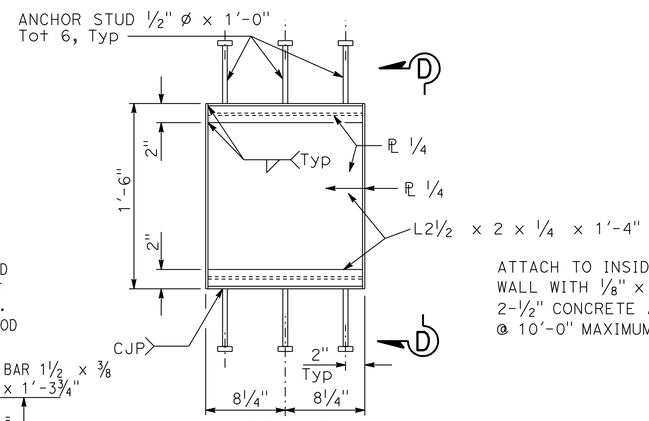

FRAME

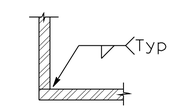

SECTION E-E

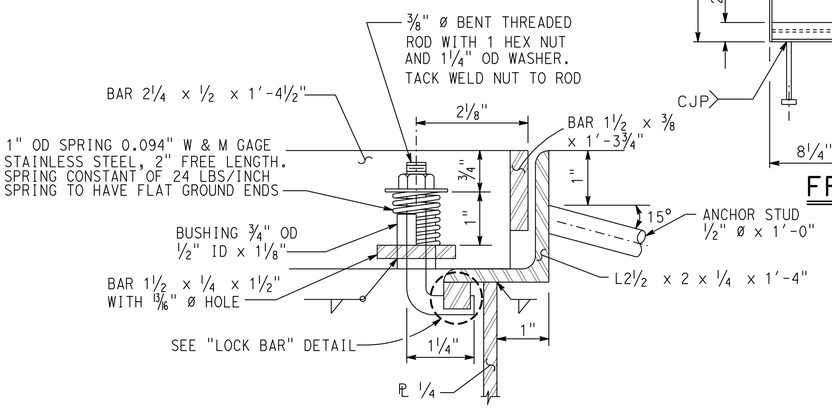

DETAIL A

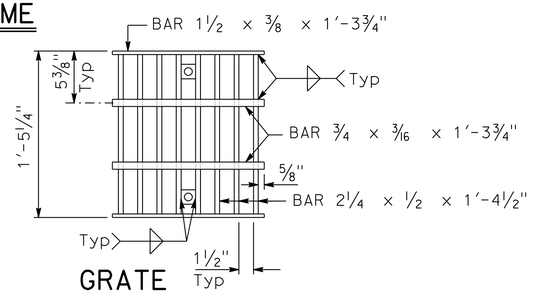

GRATE

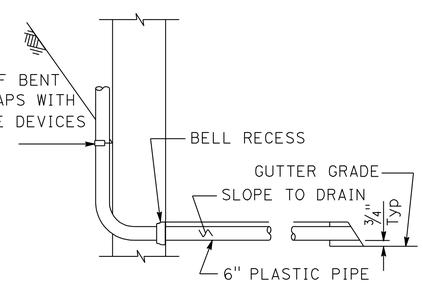

AT WALL TYPE BENT

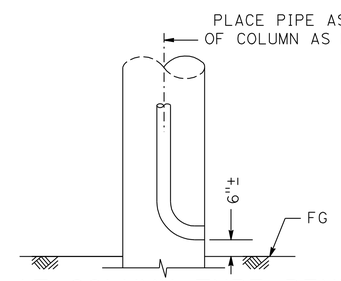

AT COLUMN TYPE BENT ABOVE GROUND

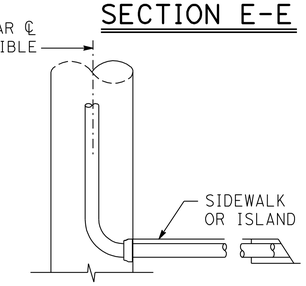

AT COLUMN TYPE BENT UNDER CURB

DRAIN OUTLET

NOTE:

All pipe to be NPS 6 x 0.135" welded steel pipe except as noted and galvanized if not encased in concrete. Fittings and bends shall have a minimum wall thickness of ⅛". All joints or connections to be butt welded or connected by a steel pipe sleeve and to be smooth throughout inside of pipe except as noted. All bends to be on 1'-6" minimum radius measured along ℄ pipe. All bends to be supported by suitable galvanized hangers @ 10'-0" maximum spacing throughout. Galvanize deck drain assembly after fabrication

NO SCALE

STANDARD DRAWING

FILE NO. xs10-020 APPROVAL DATE July 2011

STATE OF CALIFORNIA DEPARTMENT OF TRANSPORTATION

DIVISION OF ENGINEERING SERVICES

BRIDGE NO. 57-0635 POST MILE 6.06

TELEGRAPH CANYON ROAD (WIDEN)

DECK DRAIN - TYPE D-2 MODIFIED

DS OSD 2147A (ENGLISH STANDARD DRAWING "XS" BORDER REV. (02-02-11)

ORIGINAL SCALE IN INCHES FOR REDUCED PLANS 0 1 2 3

UNIT: 3613
PROJECT NUMBER & PHASE: 11000200501 CONTRACT NO.: 11-2T1811

DISREGARD PRINTS BEARING EARLIER REVISION DATES

REVISION DATES 08-26-11

SHEET 14 OF 21

FILE => b_57-0635-s-deckdrain.dgn

USERNAME => s124496 DATE PLOTTED => 09-DEC-2011 TIME PLOTTED => 10:16

DIST	COUNTY	ROUTE	POST MILES TOTAL PROJECT	SHEET No.	TOTAL SHEETS
11	SD	54,805	1.8,5.5/9.4	547	635

Tony Skreslet 8-25-11
REGISTERED CIVIL ENGINEER DATE

12-5-11
PLANS APPROVAL DATE

REGISTERED PROFESSIONAL ENGINEER TONY SKRESLET No. C50676 Exp. 09-30-11 CIVIL STATE OF CALIFORNIA

The State of California or its officers or agents shall not be responsible for the accuracy or completeness of electronic copies of this plan sheet.

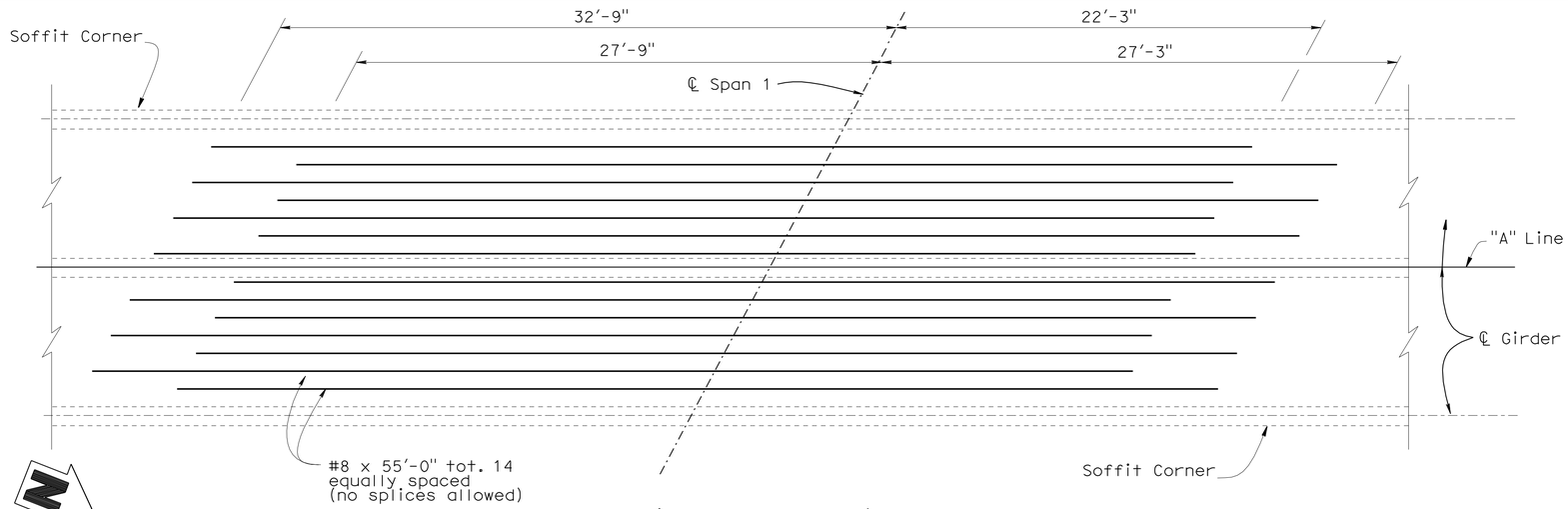

PLAN - (BOTTOM SLAB)

¼"=1'=0"

NOTE:

Reinforcement shown is in addition to that shown on the "TYPICAL SECTION" sheet.

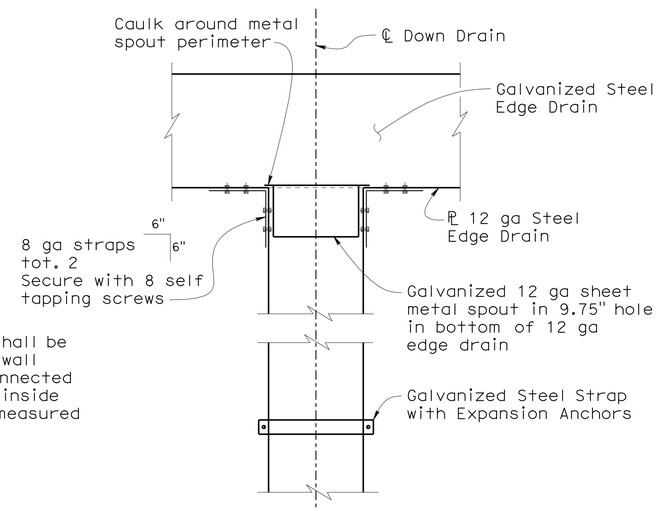

DETAIL A

1½" = 1'-0"

NOTES:

1. Drown Drains required at Abutment 3 only, total 2
   All steel pipe to be 10" x 0.134" wall thickness and shall be galvanized. Fittings and bends shall have a minimum wall thickness of ⅛". All joints or connections to be connected by a steel pipe sleeve and to be smooth throughout inside of pipe except as noted. All bends to be 2" radius measured along centerline of pipe. All bends to be smooth
2. For Drainage Details not shown see Standard Plan, DECK DRAINS TYPES D-1 AND D-2
3. All metal to be hot dipped galvanized after fabricating
4. For 'SECTION C-C' and 'SECTION D-D' see "MISCELLANEOUS DETAILS NO. 2" sheet

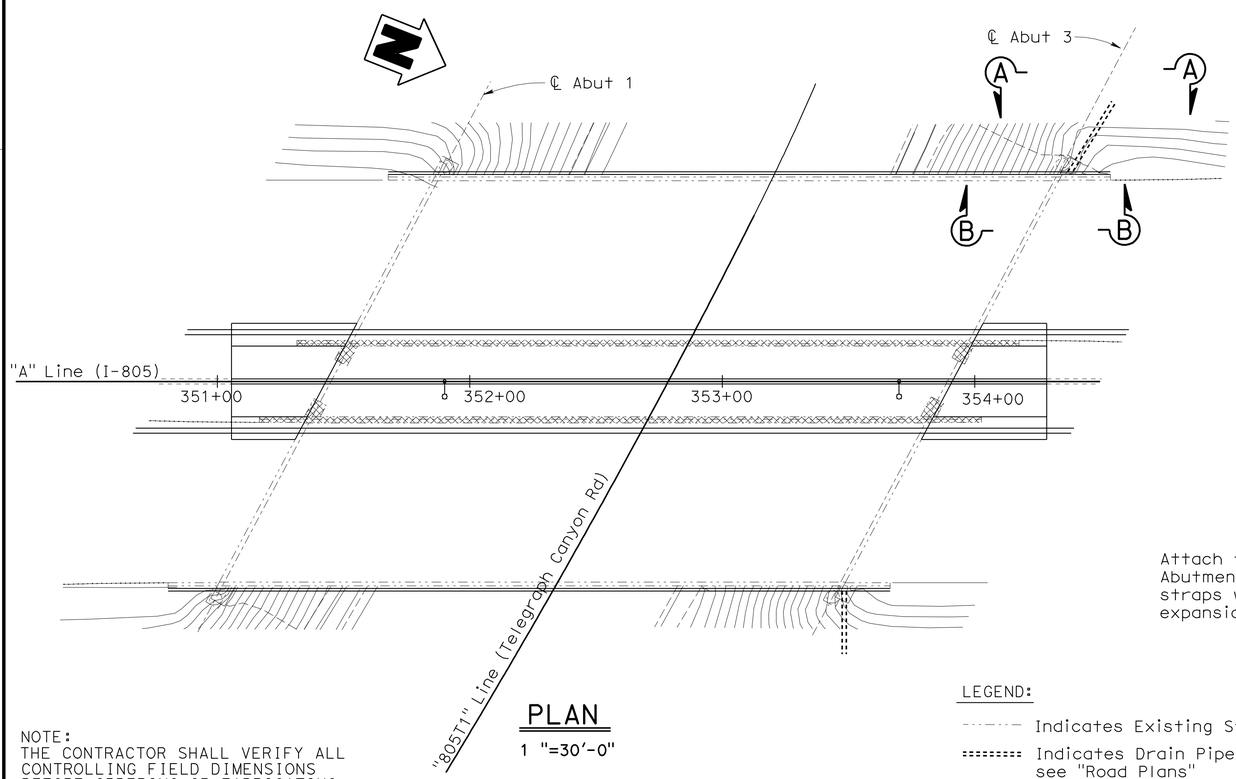

PLAN

1 "=30'-0"

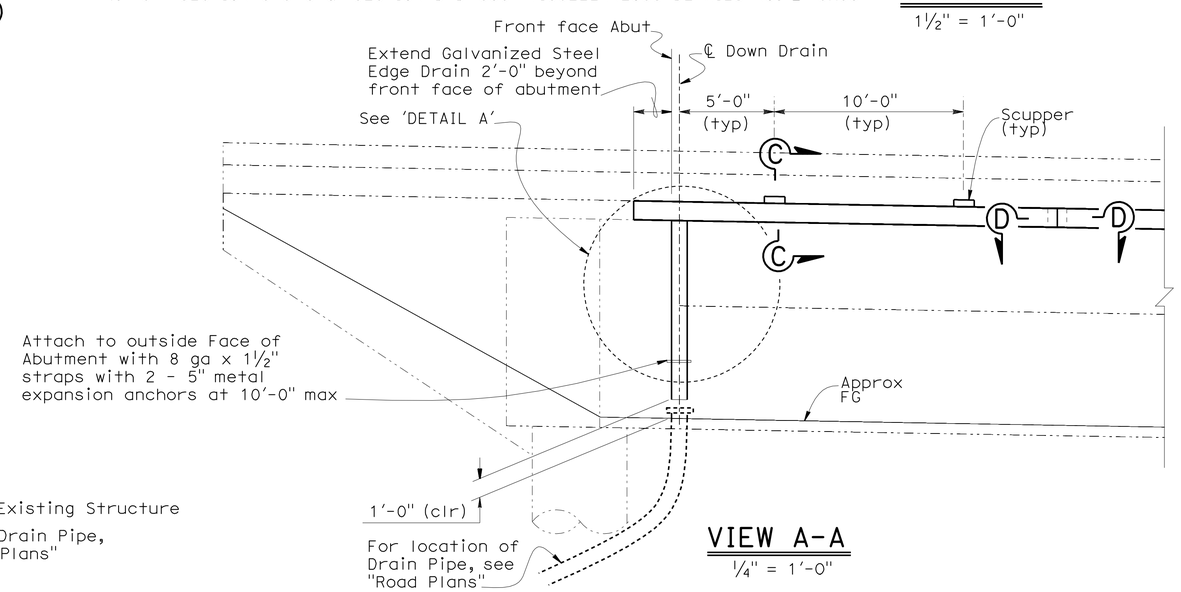

VIEW A-A

¼" = 1'-0"

NOTE:
THE CONTRACTOR SHALL VERIFY ALL CONTROLLING FIELD DIMENSIONS BEFORE ORDERING OR FABRICATING ANY MATERIAL.

LEGEND:

- Indicates Existing Structure
- Indicates Drain Pipe, see "Road Plans"

	BY	CHECKED
DESIGN	L. Bahia	T. Skreslet
DETAILS	L. Xiong	T. Skreslet
QUANTITIES	S. Galgiani	L. Bahia

STATE OF CALIFORNIA
DEPARTMENT OF TRANSPORTATION

DIVISION OF ENGINEERING SERVICES
STRUCTURE DESIGN
DESIGN BRANCH 14

BRIDGE NO. 57-0635
POST MILE 6.06

TELEGRAPH CANYON ROAD UC (WIDEN)
MISCELLANEOUS DETAILS NO. 1

STRUCTURES DESIGN DETAIL SHEET (ENGLISH) (REV. 09-01-10)

ORIGINAL SCALE IN INCHES FOR REDUCED PLANS 0 1 2 3

UNIT: 3613
PROJECT NUMBER & PHASE: 11000200501
CONTRACT NO.: 11-2T1811

DISREGARD PRINTS BEARING EARLIER REVISION DATES

REVISION DATES: 06-16-11 08-09-11 06-01-11 06-06-11

SHEET 15 OF 21

FILE => b_57-0635-s-miscdet01.dgn

USERNAME => s124496 DATE PLOTTED => 09-DEC-2011 TIME PLOTTED => 10:16

DIST	COUNTY	ROUTE	POST MILES TOTAL PROJECT	SHEET No.	TOTAL SHEETS
11	SD	54,805	1.8,5.5/9.4	548	635

Tony Skreslet 8-25-11
REGISTERED CIVIL ENGINEER DATE

12-5-11
PLANS APPROVAL DATE

REGISTERED PROFESSIONAL ENGINEER TONY SKRESLET No. C50676 Exp. 09-30-11 CIVIL STATE OF CALIFORNIA

The State of California or its officers or agents shall not be responsible for the accuracy or completeness of electronic copies of this plan sheet.

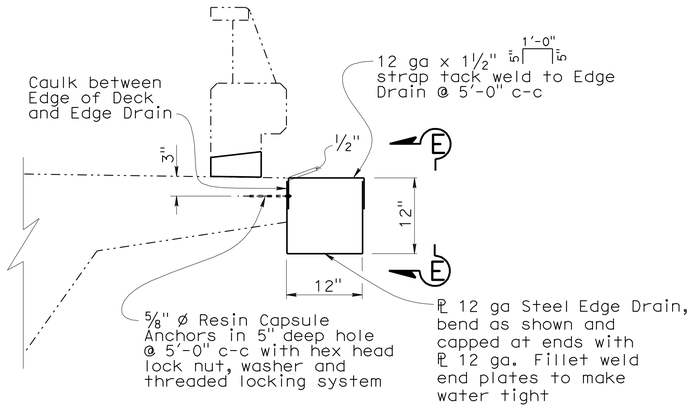

SECTION C-C

1" = 1'-0"

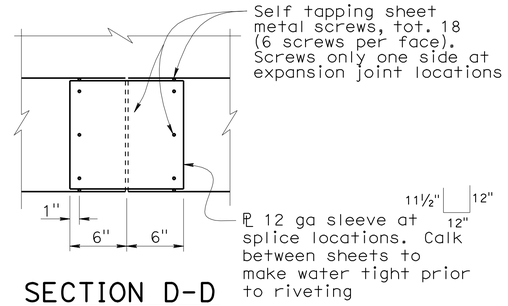

SECTION D-D

1½" = 1'-0"

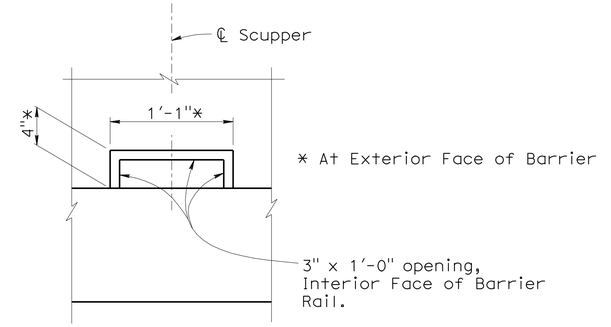

VIEW E-E

1½" = 1'-0"

Note:
Sawcut and remove existing concrete and reinforcement within limits of Scupper Opening

NOTE:
For location of SECTION C-C', and 'SECTION D-D', see "MISCELLANEOUS DETAILS NO. 1" sheet

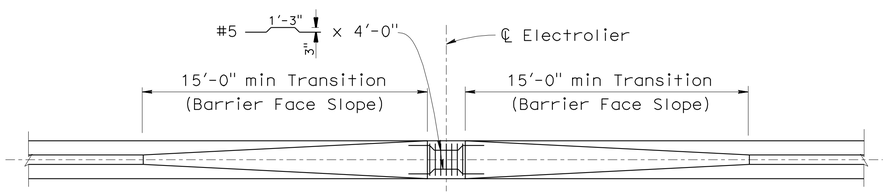

NOTE: Electrolier and Base Plate not shown

PLAN

¼" = 1'-0"

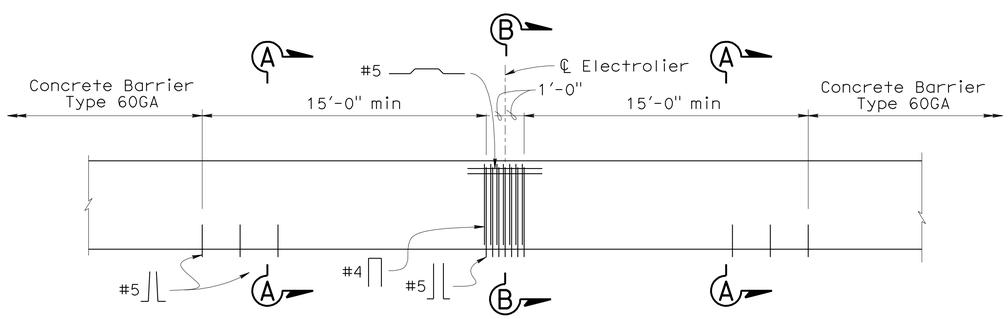

ELEVATION A76D

¼" = 1'-0"

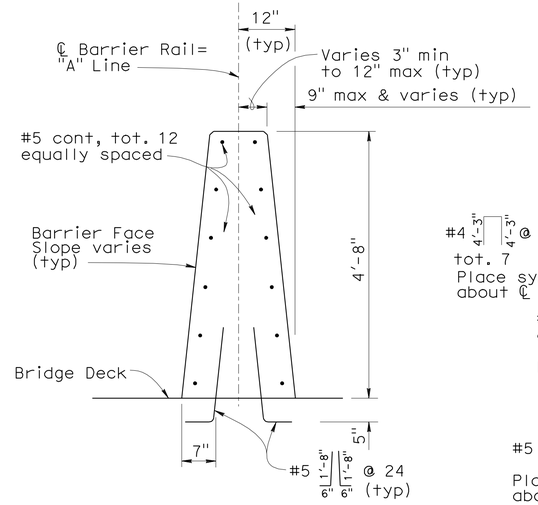

SECTION A-A

¾" = 1'-0"

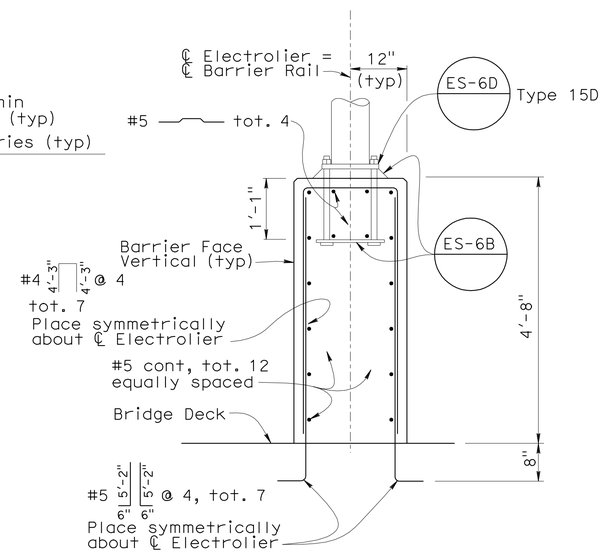

SECTION B-B

¾" = 1'-0"

NOTE:
THE CONTRACTOR SHALL VERIFY ALL CONTROLLING FIELD DIMENSIONS BEFORE ORDERING OR FABRICATING ANY MATERIAL.

ELECTROLIER/CONCRETE BARRIER TYPE 60GA MODIFIED DETAILS

	BY	CHECKED
DESIGN	T. Skreslet	K. C. Liu
DETAILS	L. Xiong	K. C. Liu
QUANTITIES	S. Galgiani	L. Bahia

STATE OF CALIFORNIA DEPARTMENT OF TRANSPORTATION

DIVISION OF ENGINEERING SERVICES STRUCTURE DESIGN DESIGN BRANCH 14

BRIDGE NO. 57-0635
POST MILE 6.06

TELEGRAPH CANYON ROAD UC (WIDEN)
MISCELLANEOUS DETAILS NO. 2

STRUCTURES DESIGN DETAIL SHEET (ENGLISH) (REV. 09-01-10)

ORIGINAL SCALE IN INCHES FOR REDUCED PLANS 0 1 2 3

UNIT: 3613
PROJECT NUMBER & PHASE: 11000200501
CONTRACT NO.: 11-2T1811

DISREGARD PRINTS BEARING EARLIER REVISION DATES

REVISION DATES 05-13-11 06-16-11 4-29-11 05-05-11

SHEET 16 OF 21

FILE => b_57-0635-s-miscdet02.dgn

USERNAME => s124496 DATE PLOTTED => 09-DEC-2011 TIME PLOTTED => 10:16

DIST	COUNTY	ROUTE	POST MILES TOTAL PROJECT	SHEET No	TOTAL SHEETS
11	SD	54,805	1.8,5.5/9.4	549	635

REGISTERED CIVIL ENGINEER 8-1-11

12-5-11
PLANS APPROVAL DATE

The State of California or its officers or agents shall not be responsible for the accuracy or completeness of electronic copies of this plan sheet.

REGISTERED PROFESSIONAL ENGINEER David T-M Liao No. C59838 Exp. 12-31-11 CIVIL STATE OF CALIFORNIA

This LOTB sheet was prepared in accordance with the Caltrans Soil & Rock Logging, Classification, & Presentation Manual (June 2007).

BENCH MARK

BM 805-5.00, Brass disk in sidewalk on north side of E. Palomar St. OC bridge, Station 298+46 Rt 60′ from ℄ 805 "A1" Line
Elevation: 300.93′
N: 549996.899
E: 1926063.832
NAVD88 (Vertical)
CCS83 (Horizontal)

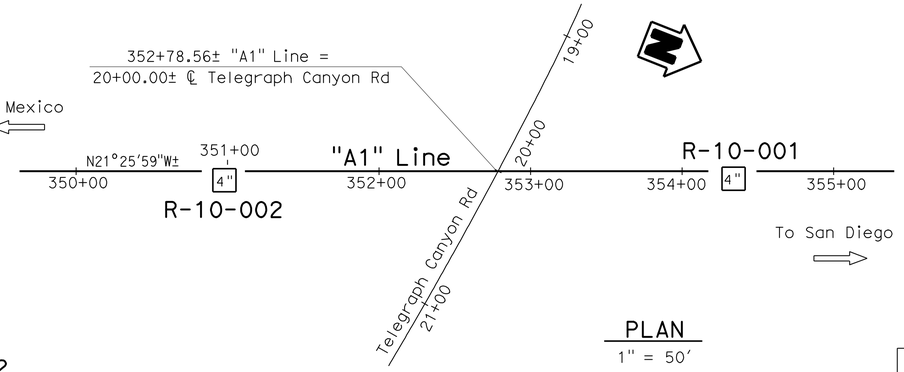

PLAN
1" = 50′

Notes:

1. No ground water was encountered during the 2010 subsurface investigation.
2. RQD designated with "N/A" (not applicable) indicates that the rock encountered within the drilled interval was not sound rock, therefore RQD was not calculated.

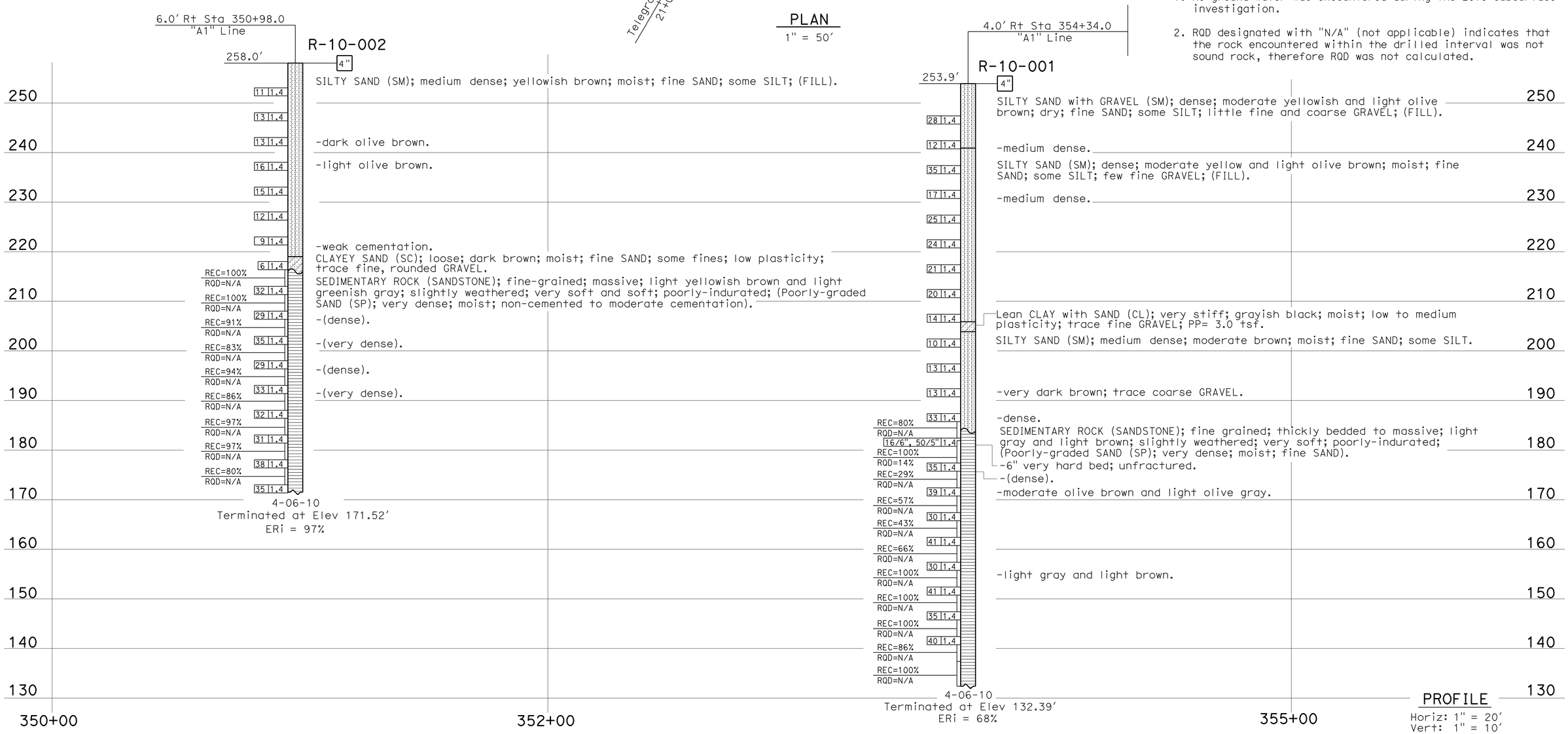

PROFILE
Horiz: 1" = 20′
Vert: 1" = 10′

ENGINEERING SERVICES	MATERIALS AND GEOTECHNICAL SERVICES	STATE OF CALIFORNIA DEPARTMENT OF TRANSPORTATION	DIVISION OF ENGINEERING SERVICES STRUCTURE DESIGN DESIGN BRANCH X	BRIDGE NO. 57-0635 POST MILE 6.0	TELEGRAPH CANYON ROAD UC (WIDEN) LOG OF TEST BORINGS 1 OF 5
FUNCTIONAL SUPERVISOR NAME: M. DeSalvatore	DRAWN BY: F. Nguyen 11/10 CHECKED BY: E. Neupert	FIELD INVESTIGATION BY: T-M Liao /J. Klamecki			

OGS CIVIL LOG OF TEST BORINGS SHEET

ORIGINAL SCALE IN INCHES FOR REDUCED PLANS 0 1 2 3

UNIT: 3643
PROJECT NUMBER & PHASE: 11000200501 CONTRACT NO.: 11-2T1811

DISREGARD PRINTS BEARING EARLIER REVISION DATES

REVISION DATES 04-28-11 06-03-11 07-08-11 07-20-11 SHEET 17 OF 21

FILE => b_57-0635-z-1otb_1of5.dgn

USERNAME => s124496 DATE PLOTTED => 09-DEC-2011 TIME PLOTTED => 10:16

DIST	COUNTY	ROUTE	POST MILES TOTAL PROJECT	SHEET No	TOTAL SHEETS
11	SD	54,805	1.8,5.5/9.4	550	635

REGISTERED CIVIL ENGINEER 8-1-11

12-5-11
PLANS APPROVAL DATE

REGISTERED PROFESSIONAL ENGINEER David T-M Liao No. C59838 Exp. 12-31-11 CIVIL STATE OF CALIFORNIA

The State of California or its officers or agents shall not be responsible for the accuracy or completeness of electronic copies of this plan sheet.

REFERENCE: CALTRANS SOIL & ROCK LOGGING, CLASSIFICATION, AND PRESENTATION MANUAL (JUNE 2007)

CEMENTATION

Description	Criteria
Weak	Crumbles or breaks with handling or little finger pressure.
Moderate	Crumbles or breaks with considerable finger pressure.
Strong	Will not crumble or break with finger pressure.

CONSISTENCY OF COHESIVE SOILS

Description	Unconfined Compressive Strength (tsf)	Pocket Penetrometer Measurement (tsf)	Torvane Measurement (tsf)	Field Approximation
Very Soft	< 0.25	< 0.25	< 0.12	Easily penetrated several inches by fist
Soft	0.25 to 0.50	0.25 to 0.50	0.12 to 0.25	Easily penetrated several inches by thumb
Medium Stiff	0.50 to 1.0	0.50 to 1.0	0.25 to 0.50	Penetrated several inches by thumb with moderate effort
Stiff	1 to 2	1 to 2	0.50 to 1.0	Readily indented by thumb but penetrated only with great effort
Very Stiff	2 to 4	2 to 4	1.0 to 2.0	Readily indented by thumbnail
Hard	> 4.0	> 4.0	> 2.0	Indented by thumbnail with difficulty

BOREHOLE IDENTIFICATION

Symbol	Hole Type	Description
Size	A	Auger Boring
Size	R P	Rotary drilled boring Rotary percussion boring (air)
Size	R	Rotary drilled diamond core
Size	HD HA	Hand driven (1-inch soil tube) Hand Auger
●	D	Dynamic Cone Penetration Boring
▲	CPT	Cone Penetration Test (ASTM D 5778-95)
⬚	O	Other

Note: Size in inches.

PLASTICITY OF FINE-GRAINED SOILS

Description	Criteria
Nonplastic	A 1/8-inch thread cannot be rolled at any water content.
Low	The thread can barely be rolled and the lump cannot be formed when drier than the plastic limit.
Medium	The thread is easy to roll and not much time is required to reach the plastic limit. The thread cannot be rerolled after reaching the plastic limit. The lump crumbles when drier than the plastic limit.
High	It takes considerable time rolling and kneading to reach the plastic limit. The thread can be rerolled several times after reaching the plastic limit. The lump can be formed without crumbling when drier than the plastic limit.

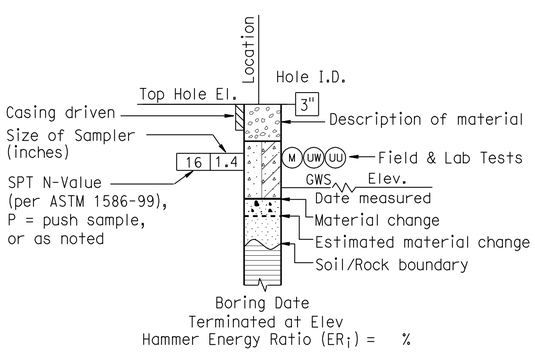

ROTARY BORING

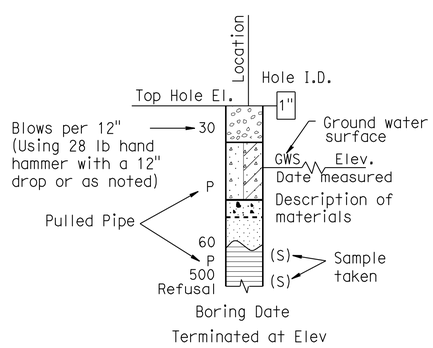

HAND BORING

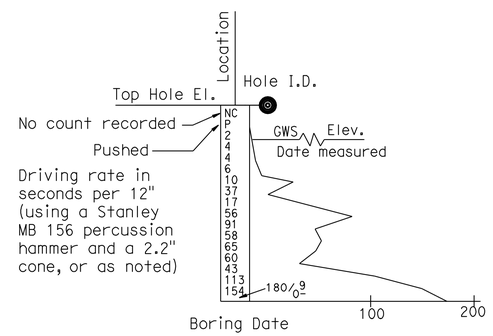

DYNAMIC CONE PENETRATION BORING

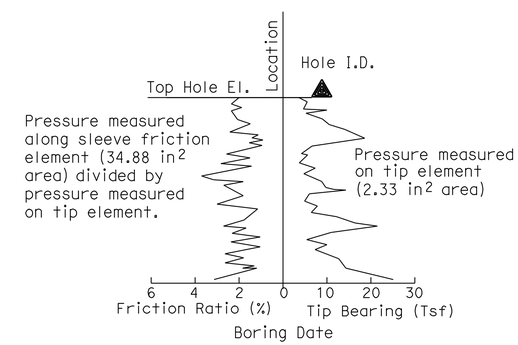

CONE PENETRATION TEST (CPT) SOUNDING

ENGINEERING SERVICES	MATERIALS AND GEOTECHNICAL SERVICES	STATE OF CALIFORNIA DEPARTMENT OF TRANSPORTATION	DIVISION OF ENGINEERING SERVICES STRUCTURE DESIGN DESIGN BRANCH X	BRIDGE NO. 57-0635 POST MILE 6.0	TELEGRAPH CANYON ROAD UC (WIDEN) LOG OF TEST BORINGS 2 OF 5
	PREPARED BY: F. Nguyen 11/10				

GS LOTB SOIL LEGEND

ORIGINAL SCALE IN INCHES FOR REDUCED PLANS 0 1 2 3

UNIT: 3643
PROJECT NUMBER & PHASE: 11000200501 CONTRACT NO.: 11-2T1811

DISREGARD PRINTS BEARING EARLIER REVISION DATES

REVISION DATES

SHEET 18 OF 21

FILE => b_57-0635-z-lotb_2of5.dgn

USERNAME => s124496 DATE PLOTTED => 09-DEC-2011 TIME PLOTTED => 10:17

REFERENCE: CALTRANS SOIL & ROCK LOGGING, CLASSIFICATION, AND PRESENTATION MANUAL (JUNE 2007)

DIST	COUNTY	ROUTE	POST MILES TOTAL PROJECT	SHEET No	TOTAL SHEETS
11	SD	54,805	1.8,5.5/9.4	551	635

REGISTERED CIVIL ENGINEER 8-1-11

12-5-11
PLANS APPROVAL DATE

REGISTERED PROFESSIONAL ENGINEER David T-M Liao No. C59838 Exp. 12-31-11 CIVIL STATE OF CALIFORNIA

The State of California or its officers or agents shall not be responsible for the accuracy or completeness of electronic copies of this plan sheet.

GROUP SYMBOLS AND NAMES

Graphic/Symbol	Group Names	Graphic/Symbol	Group Names
GW	Well-graded GRAVEL Well-graded GRAVEL with SAND	CL	Lean CLAY Lean CLAY with SAND Lean CLAY with GRAVEL SANDY lean CLAY SANDY lean CLAY with GRAVEL GRAVELLY lean CLAY GRAVELLY lean CLAY with SAND
GP	Poorly graded GRAVEL Poorly graded GRAVEL with SAND		
GW-GM	Well-graded GRAVEL with SILT Well-graded GRAVEL with SILT and SAND	CL-ML	SILTY CLAY SILTY CLAY with SAND SILTY CLAY with GRAVEL SANDY SILTY CLAY SANDY SILTY CLAY with GRAVEL GRAVELLY SILTY CLAY GRAVELLY SILTY CLAY with SAND
GW-GC	Well-graded GRAVEL with CLAY (or SILTY CLAY) Well-graded GRAVEL with CLAY and SAND (or SILTY CLAY and SAND)		
GP-GM	Poorly graded GRAVEL with SILT Poorly graded GRAVEL with SILT and SAND	ML	SILT SILT with SAND SILT with GRAVEL SANDY SILT SANDY SILT with GRAVEL GRAVELLY SILT GRAVELLY SILT with SAND
GP-GC	Poorly graded GRAVEL with CLAY (or SILTY CLAY) Poorly graded GRAVEL with CLAY and SAND (or SILTY CLAY and SAND)		
GM	SILTY GRAVEL SILTY GRAVEL with SAND	OL	ORGANIC lean CLAY ORGANIC lean CLAY with SAND ORGANIC lean CLAY with GRAVEL SANDY ORGANIC lean CLAY SANDY ORGANIC lean CLAY with GRAVEL GRAVELLY ORGANIC lean CLAY GRAVELLY ORGANIC lean CLAY with SAND
GC	CLAYEY GRAVEL CLAYEY GRAVEL with SAND		
GC-GM	SILTY, CLAYEY GRAVEL SILTY, CLAYEY GRAVEL with SAND	OL	ORGANIC SILT ORGANIC SILT with SAND ORGANIC SILT with GRAVEL SANDY ORGANIC SILT SANDY ORGANIC SILT with GRAVEL GRAVELLY ORGANIC SILT GRAVELLY ORGANIC SILT with SAND
SW	Well-graded SAND Well-graded SAND with GRAVEL		
SP	Poorly graded SAND Poorly graded SAND with GRAVEL	CH	Fat CLAY Fat CLAY with SAND Fat CLAY with GRAVEL SANDY fat CLAY SANDY fat CLAY with GRAVEL GRAVELLY fat CLAY GRAVELLY fat CLAY with SAND
SW-SM	Well-graded SAND with SILT Well-graded SAND with SILT and GRAVEL		
SW-SC	Well-graded SAND with CLAY (or SILTY CLAY) Well-graded SAND with CLAY and GRAVEL (or SILTY CLAY and GRAVEL)	MH	Elastic SILT Elastic SILT with SAND Elastic SILT with GRAVEL SANDY elastic SILT SANDY elastic SILT with GRAVEL GRAVELLY elastic SILT GRAVELLY elastic SILT with SAND
SP-SM	Poorly graded SAND with SILT Poorly graded SAND with SILT and GRAVEL		
SP-SC	Poorly graded SAND with CLAY (or SILTY CLAY) Poorly graded SAND with CLAY and GRAVEL (or SILTY CLAY and GRAVEL)	OH	ORGANIC fat CLAY ORGANIC fat CLAY with SAND ORGANIC fat CLAY with GRAVEL SANDY ORGANIC fat CLAY SANDY ORGANIC fat CLAY with GRAVEL GRAVELLY ORGANIC fat CLAY GRAVELLY ORGANIC fat CLAY with SAND
SM	SILTY SAND SILTY SAND with GRAVEL		
SC	CLAYEY SAND CLAYEY SAND with GRAVEL	OH	ORGANIC elastic SILT ORGANIC elastic SILT with SAND ORGANIC elastic SILT with GRAVEL SANDY ORGANIC elastic SILT SANDY ORGANIC elastic SILT with GRAVEL GRAVELLY ORGANIC elastic SILT GRAVELLY ORGANIC elastic SILT with SAND
SC-SM	SILTY, CLAYEY SAND SILTY, CLAYEY SAND with GRAVEL		
PT	PEAT	OL/OH	ORGANIC SOIL ORGANIC SOIL with SAND ORGANIC SOIL with GRAVEL SANDY ORGANIC SOIL SANDY ORGANIC SOIL with GRAVEL GRAVELLY ORGANIC SOIL GRAVELLY ORGANIC SOIL with SAND
	COBBLES COBBLES and BOULDERS BOULDERS		

FIELD AND LABORATORY TESTING

- (C) Consolidation (ASTM D 2435)
- (CL) Collapse Potential (ASTM D 5333)
- (CP) Compaction Curve (CTM 216)
- (CR) Corrosivity Testing (CTM 643, CTM 422, CTM 417)
- (CU) Consolidated Undrained Triaxial (ASTM D 4767)
- (DS) Direct Shear (ASTM D 3080)
- (EI) Expansion Index (ASTM D 4829)
- (M) Moisture Content (ASTM D 2216)
- (OC) Organic Content-% (ASTM D 2974)
- (P) Permeability (CTM 220)
- (PA) Particle Size Analysis (ASTM D 422)
- (PI) Plasticity Index (AASHTO T 90) Liquid Limit (AASHTO T 89)
- (PL) Point Load Index (ASTM D 5731)
- (PM) Pressure Meter
- (PP) Pocket Penetrometer
- (R) R-Value (CTM 301)
- (SE) Sand Equivalent (CTM 217)
- (SG) Specific Gravity (AASHTO T 100)
- (SL) Shrinkage Limit (ASTM D 427)
- (SW) Swell Potential (ASTM D 4546)
- (TV) Pocket Torvane
- (UC) Unconfined Compression-Soil (ASTM D 2166) Unconfined Compression-Rock (ASTM D 2938)
- (UU) Unconsolidated Undrained Triaxial (ASTM D 2850)
- (UW) Unit Weight (ASTM D 4767)
- (VS) Vane Shear (AASHTO T 223)

APPARENT DENSITY OF COHESIONLESS SOILS

Description	SPT N_{60} (Blows / 12 inches)
Very loose	0 - 4
Loose	5 - 10
Medium Dense	11 - 30
Dense	31 - 50
Very Dense	> 50

MOISTURE

Description	Criteria
Dry	Absence of moisture, dusty, dry to the touch
Moist	Damp but no visible water
Wet	Visible free water, usually soil is below water table

PERCENT OR PROPORTION OF SOILS

Description	Criteria
Trace	Particles are present but estimated to be less than 5%
Few	5 to 10%
Little	15 to 25%
Some	30 to 45%
Mostly	50 to 100%

PARTICLE SIZE

Description		Size
Boulder		> 12"
Cobble		3" to 12"
Gravel	Coarse	3/4" to 3"
	Fine	No. 4 to 3/4"
Sand	Coarse	No. 10 to No. 4
	Medium	No. 40 to No. 10
	Fine	No. 200 to No. 40

ENGINEERING SERVICES

MATERIALS AND GEOTECHNICAL SERVICES

PREPARED BY: F. Nguyen 11/10

STATE OF CALIFORNIA DEPARTMENT OF TRANSPORTATION

DIVISION OF ENGINEERING SERVICES STRUCTURE DESIGN DESIGN BRANCH X

BRIDGE NO. 57-0635 POST MILE 6.0

TELEGRAPH CANYON ROAD UC (WIDEN)
LOG OF TEST BORINGS 3 OF 5

GS LOTB SOIL LEGEND

ORIGINAL SCALE IN INCHES FOR REDUCED PLANS 0 1 2 3

UNIT: 3643
PROJECT NUMBER & PHASE: 11000200501 CONTRACT NO.: 11-2T1811

DISREGARD PRINTS BEARING EARLIER REVISION DATES

REVISION DATES

SHEET 19 OF 21

FILE => b_57-0635-z-lotb_3of5.dgn

USERNAME => s124496 DATE PLOTTED => 09-DEC-2011 TIME PLOTTED => 10:17

DIST	COUNTY	ROUTE	POST MILES TOTAL PROJECT	SHEET No	TOTAL SHEETS
11	SD	54,805	1.8,5.5/9.4	552	635

REGISTERED CIVIL ENGINEER 8-1-11

12-5-11
PLANS APPROVAL DATE

The State of California or its officers or agents shall not be responsible for the accuracy or completeness of electronic copies of this plan sheet.

REGISTERED PROFESSIONAL ENGINEER David T-M Liao No. C59838 Exp. 12-31-11 CIVIL STATE OF CALIFORNIA

REFERENCE: CALTRANS SOIL & ROCK LOGGING, CLASSIFICATION, AND PRESENTATION MANUAL (JUNE 2007)

PERCENT CORE RECOVERY (REC) & ROCK QUALITY DESIGNATION (RQD)

$$REC = \frac{\sum \text{Length of the recovered core pieces (inches)}}{\text{Total length of core run (inches)}} \times 100\%$$

$$RQD = \frac{\sum \text{Length of intact core pieces} \geq 4''}{\text{Total length of core run (inches)}} \times 100\%$$

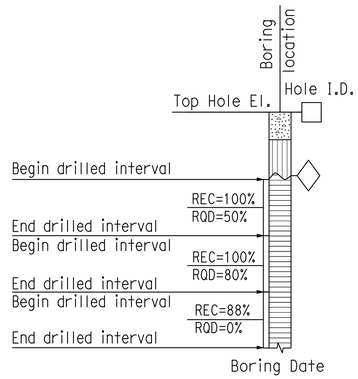

RELATIVE STRENGTH OF INTACT ROCK

Term	Uniaxial Compressive Strength (PSI)
Extremely Strong	> 30,000
Very Strong	14,500 - 30,000
Strong	7,000 - 14,500
Medium Strong	3,500 - 7,000
Weak	700 - 3,500
Very Weak	150 - 700
Extremely Weak	< 150

BEDDING SPACING

Description	Thickness / Spacing
Massive	Greater than 10 ft
Very thickly bedded	3 to 10 ft
Thickly bedded	1 to 3 ft
Moderately bedded	3-5/8" to 1 ft
Thinly bedded	1-1/4" to 3-5/8"
Very thinly bedded	3/8" to 1-1/4"
Laminated	Less than 3/8"

LEGEND OF ROCK MATERIALS

- IGNEOUS ROCK
- SEDIMENTARY ROCK
- METAMORPHIC ROCK

ROCK HARDNESS

Description	Criteria
Extremely Hard	Specimen cannot be scratched with a pocket knife or sharp pick; can only be chipped with repeated heavy hammer blows.
Very Hard	Specimen cannot be scratched with a pocket knife or sharp pick. Breaks with repeated heavy hammer blows.
Hard	Specimen can be scratched with a pocket knife or sharp pick with difficulty (heavy pressure). Heavy hammer blows required to break specimen.
Moderately Hard	Specimen can be scratched with pocket knife or sharp pick with light or moderate pressure. Core breaks with moderate hammer blows.
Moderately Soft	Specimen can be grooved 1/6" deep with a pocket knife or sharp pick with moderate or heavy pressure. Breaks with light hammer blow or heavy manual pressure.
Soft	Specimen can be grooved or gouged easily by a pocket knife or sharp pick with light pressure, can be scratched with fingernail. Breaks with light to moderate manual pressure.
Very Soft	Specimen can be readily indented, grooved or gouged with fingernail, or carved with a pocket knife. Breaks with light manual pressure.

FRACTURE DENSITY

Description	Observed Fracture Density
Unfractured	No fractures.
Very slightly fractured	Lengths greater than 3 feet.
Slightly fractured	Lengths from 1 to 3 feet with few lengths less than 1 foot or greater than 3 feet.
Moderately fractured	Lengths mostly in 4" to 1 foot range with most lengths about 8"
Intensely fractured	Lengths average from 1 to 4" with scattered fragmented intervals with lengths less than 4"
Very intensely fractured	Mostly chips and fragments with a few scattered short core lengths.

Combination descriptors (such as "Very intensely to intensely fractured") are used where equal distribution of both fracture density characteristics is present over a significant interval or exposure, or where characteristics are "in between" the descriptor definitions. Only two adjacent descriptors may be combined.

WEATHERING DESCRIPTORS FOR INTACT ROCK

Description	Diagnostic features					General Characteristics
	Chemical Weathering-Discoloration and/or oxidation		Mechanical Weathering-Grain boundary conditions (disaggregation) primarily for granitics and some coarse-grained sediments	Texture and Solutioning		
	Body of Rock	Fracture Surfaces		Texture	Solutioning	
Fresh	No discoloration, not oxidized.	No discoloration or oxidation.	No separation, intact (tight).	No change.	No solutioning.	Hammer rings when crystalline rocks are struck.
Slightly Weathered	Discoloration or oxidation is limited to surface of, or short distance from, fractures; some feldspar crystals are dull.	Minor to complete discoloration or oxidation of most surfaces.	No visible separation, intact (tight).	Preserved.	Minor leaching of some soluble minerals may be noted.	Hammer rings when crystalline rocks are struck. Body of rock not weakened.
Moderately Weathered	Discoloration or oxidation extends from fractures usually throughout; Fe-Mg minerals are "rusty," feldspar crystals are "cloudy."	All fracture surfaces are discolored or oxidized.	Partial separation of boundaries visible.	Generally preserved.	Soluble minerals may be mostly leached.	Hammer does not ring when rock is struck. Body of rock is slightly weakened.
Intensely Weathered	Discoloration or oxidation throughout; all feldspars and Fe-Mg minerals are altered to clay to some extent; or chemical alteration produces in-situ disaggregation, see grain boundary conditions.	All fracture surfaces are discolored or oxidized, surfaces friable.	Partial separation, rock is friable; in semiarid conditions granitics are disaggregated.	Texture altered by chemical disintegration (hydration, argillation).	Leaching of soluble minerals may be complete.	Dull sound when struck with hammer, usually can be broken with moderate to heavy manual pressure or by light hammer blow without reference to planes of weakness such as incipient or hairline fractures, or veinlets. Rock is significantly weakened.
Decomposed	Discolored or oxidized throughout, but resistant minerals such as quartz may be unaltered; all feldspars and Fe-Mg minerals are completely altered to clay.		Complete separation of grain boundaries (disaggregated).	Resembles a soil, partial or complete remnant rock structure may be preserved; leaching of soluble minerals usually complete.		Can be granulated by hand. Resistant minerals such as quartz may be present as "stringers" or "dikes."

Combination descriptors (such as "slightly weathered to fresh") are permissible where equal distribution of both weathering characteristics is present over significant intervals or where characteristics present are "in between" the diagnostic feature. However, combination descriptors should not be used where significant, identifiable zones can be delineated. Only two adjacent descriptors may be combined. "Very intensely weathered" is the combination descriptor for "intensely weathered to decomposed."

ENGINEERING SERVICES

MATERIALS AND GEOTECHNICAL SERVICES

PREPARED BY: F. Nguyen 11/10

STATE OF CALIFORNIA DEPARTMENT OF TRANSPORTATION

DIVISION OF ENGINEERING SERVICES STRUCTURE DESIGN

DESIGN BRANCH X

BRIDGE NO. 57-0635

POST MILE 6.0

TELEGRAPH CANYON ROAD UC (WIDEN)

LOG OF TEST BORINGS 4 OF 5

GS LOTB SOIL LEGEND

ORIGINAL SCALE IN INCHES FOR REDUCED PLANS 0 1 2 3

UNIT: 3643
PROJECT NUMBER & PHASE: 11000200501
CONTRACT NO.: 11-2T1811

DISREGARD PRINTS BEARING EARLIER REVISION DATES

REVISION DATES

SHEET 20 OF 21

FILE => b_57-0635-z-lotb_4of5.dgn

USERNAME => s124496 DATE PLOTTED => 09-DEC-2011 TIME PLOTTED => 10:17

FED. ROAD DIV. NO.	STATE	F. A. PROJECT NO.	SHEET NO.	TOTAL SHEETS
7	CALIF.			

DIST.	COUNTY	ROUTE	SECTION	SHEET NO.	TOTAL SHEETS
11	SD	805	3.5/7.3	139	216

REGISTERED CIVIL ENGINEER May 26, 1969

BENCH MARK

BM" BL 877 Elev 200.10
Lead and tag set in curb of Telegraph Canyon Road
44.28' left of station 11+07.22 on "T" Line

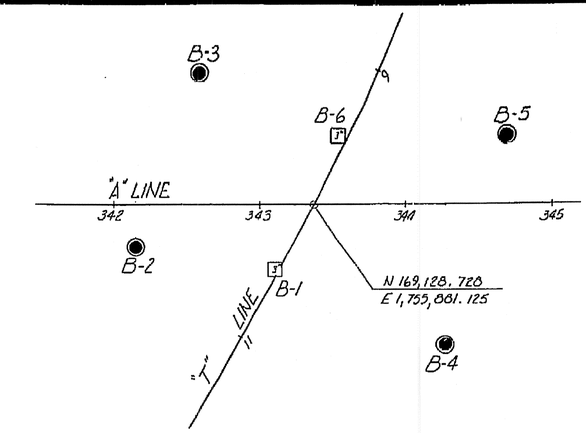

PLAN
Scale 1" = 50'

NO GROUND WATER ENCOUNTERED DURING THIS INVESTIGATION BY BRIDGE DEPT. GEOLOGY SECTION
DATE AUG 1966

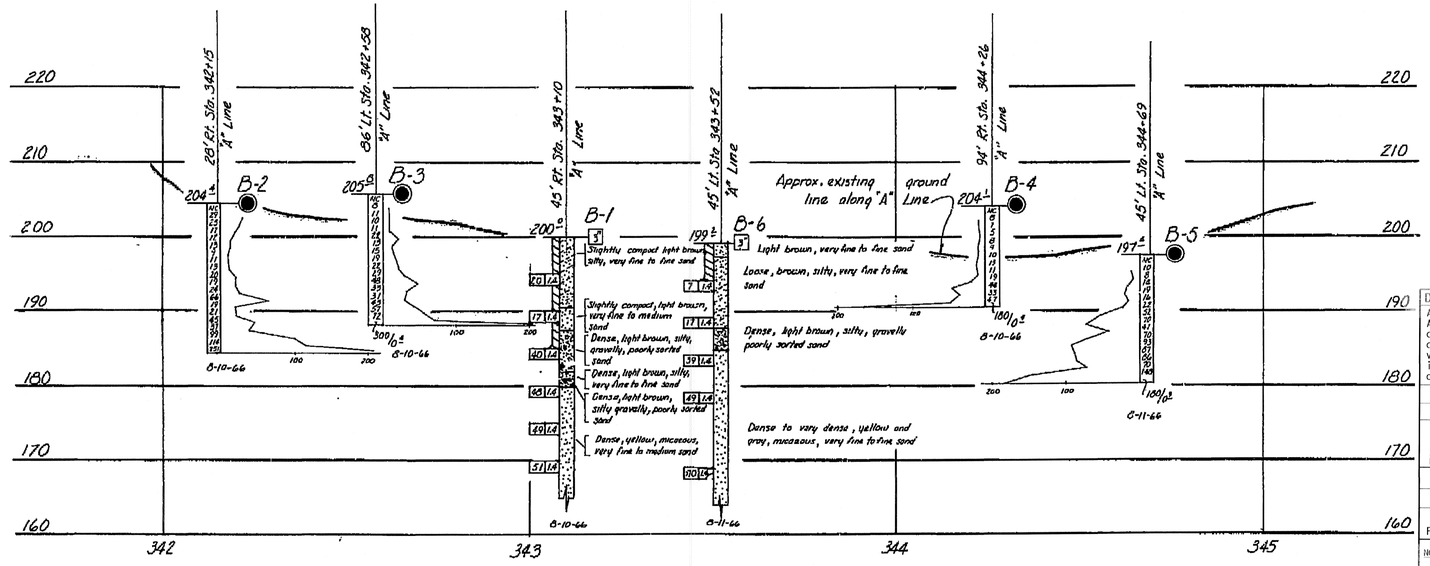

PROFILE
Scale Vert. 1" = 10'
Horiz. 1" = 20'

REGISTERED PROFESSIONAL ENGINEER
David T-M Liao
No. C59838
Exp. 12-31-11
CIVIL
STATE OF CALIFORNIA

DIVISION OF ENGINEERING SERVICES - MATERIALS AND GEOTECHNICAL SERVICES
As-Built Log of Test Borings sheet is considered an informational document only. As such, the State of California registration seal with signature, license number and registration certificate expiration date confirm that this is a true and accurate copy of the original document. It does not attest to the accuracy or validity of the information contained in the original document. This drawing is available and presented only for the convenience of any bidder, contractor or other interested party.

DIST.	COUNTY	ROUTE	POST MILE-TOTAL PROJECT	Sheet No.	Total Sheets
11	SD	54,805	1.8,5.5/9.4	553	635

REGISTERED CIVIL ENGINEER — DATE 7-14-11

TELEGRAPH CANYON ROAD UC (WIDEN)
LOG OF TEST BORINGS 5 OF 5

UNIT: 3643	CONTRACT No.	BRIDGE No.
PROJECT NUMBER & PHASE: 11000200501	11-2T1811	57-0635

NOTE: A COPY OF THIS LOG OF TEST BORINGS IS AVAILABLE AT OFFICE OF STRUCTURE MAINTENANCE AND INVESTIGATIONS, SACRAMENTO, CALIFORNIA — Sheet 21 of 21

TO ACCOMPANY PLANS DATED 12-5-11

Sheet 9 of 17

AS BUILT PLANS
Contract No. 11-110124
Date Completed
Document No. A0000816

STATE OF CALIFORNIA
DEPARTMENT OF PUBLIC WORKS
DIVISION OF HIGHWAYS

TELEGRAPH CANYON ROAD
UNDERCROSSING

LOG OF TEST BORINGS

SCALE As Noted | BRIDGE 57-0635 | FILE | DRAWING 57635-11

LEGEND OF BORING OPERATIONS

- Penetrometer
- 2¼" Cone Penetrometer
- Sampler Boring (Dry)
- Rotary Boring (Wet)
- Augers Boring (Dry)
- Jet Boring
- Core Boring
- Test Pit

Penetration Boring — Top Hole El. — Location — Sample — Blows per foot (Hammer wt. lb. Hammer drop in. Sampler size in.) — Description of material — Groundwater and flow — Unconfined compressive strength (Kg/cm²) — Unconformable material change — Estimated material change — Penetrometer reading (Kg/cm²)

Rotary Boring — Top Hole El. — Location — Casing driven — Size of sampler (inches) — Blows per foot (Hammer wt. lb. Hammer drop in.) — Description of material — Unconfined compressive strength (Kg/cm²) — Unconformable material change — Estimated material change — Shear strength (Kg/cm²)

1" Soil Tube — Top Hole El. — Location — Groundwater and flow — Blows per foot (Hammer wt. lb. Hammer drop in.) — Description of material — Pulled from soil — Compaction — Adjacent soil — Adjacent boring

LEGEND OF EARTH MATERIALS

- Gravel
- Sand
- Silt
- Clay
- Sandy Clay or Clayey Sand
- Sandy Silt or Silty Sand
- Silty Clay or Clayey Silt
- Peat and/or Organic Matter
- Fill Material
- Igneous Rock
- Sedimentary Rock
- Metamorphic Rock

CLASSIFICATION OF MATERIAL BASED ON STANDARD GRADE SIZE LIMITS

Diagram showing the basis for estimates of grade size distribution used in determination of class names.
If equal to or greater than 50% of any one class, the term "gravelly" may be added to the class name, viz. "gravelly sand". The terms "coarse", "medium" and "fine" may be used to describe sand, silt and gravel, refer to standard grade size limits.

NOTE: Classification of earth material as shown on this sheet is based upon field inspection and is not to be construed to imply mechanical analysis.

BRIDGE DEPARTMENT
ENGINEERING GEOLOGY SECTION

CHECKED by H.E. Bressler 9-12-68
Approval Recommended: Charles S. Thomas, Engineering Geologist

Charge 11201
W.A. 110121

Disregard prints bearing earlier numbers → PREL. DRAWING No. PR-

FILENAME => b_57-0635-z_lotb_5of5.tif

DIST	COUNTY	ROUTE	POST MILES TOTAL PROJECT	SHEET No.	TOTAL SHEETS
11	SD	54,805	1.8,5.5/9.4	554	635

Tony Skreslet
REGISTERED CIVIL ENGINEER — DATE 8-25-11

12-5-11
PLANS APPROVAL DATE

REGISTERED PROFESSIONAL ENGINEER — TONY SKRESLET — No. C50676 — Exp. 09-30-11 — CIVIL — STATE OF CALIFORNIA

The State of California or its officers or agents shall not be responsible for the accuracy or completeness of electronic copies of this plan sheet.

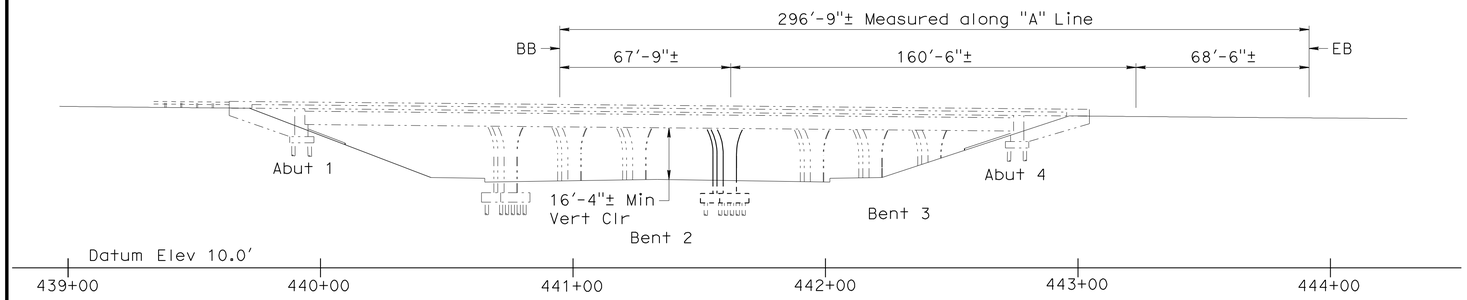

ELEVATION

1" = 30'-0"

QUANTITIES

BRIDGE REMOVAL (PORTION), LOCATION C	LUMP	SUM
STRUCTURE EXCAVATION (BRIDGE)	437	CY
STRUCTURE BACKFILL (BRIDGE)	183	CY
FURNISH STEEL PILING (HP 10 X 57)	400	LF
DRIVE STEEL PILE (HP 10 X 57)	10	EA
FURNISH STEEL PILING (HP 14 X 89)	2,800	LF
DRIVE STEEL PILE (HP 14 X 89)	72	EA
PRESTRESSING CAST-IN-PLACE CONCRETE	LUMP	SUM
STRUCTURAL CONCRETE, BRIDGE FOOTING	172	CY
STRUCTURAL CONCRETE, BRIDGE	966	CY
STRUCTURAL CONCRETE, APPROACH SLAB (TYPE N)	117	CY
DRILL AND BOND DOWEL	54	LF
JOINT SEAL (MR 2")	104	LF
BAR REINFORCING STEEL (BRIDGE)	259,002	LB
BAR REINFORCING STEEL (EPOXY COATED) (BRIDGE)	6,018	LB
CONCRETE BARRIER (TYPE 60A MODIFIED)	395	LF

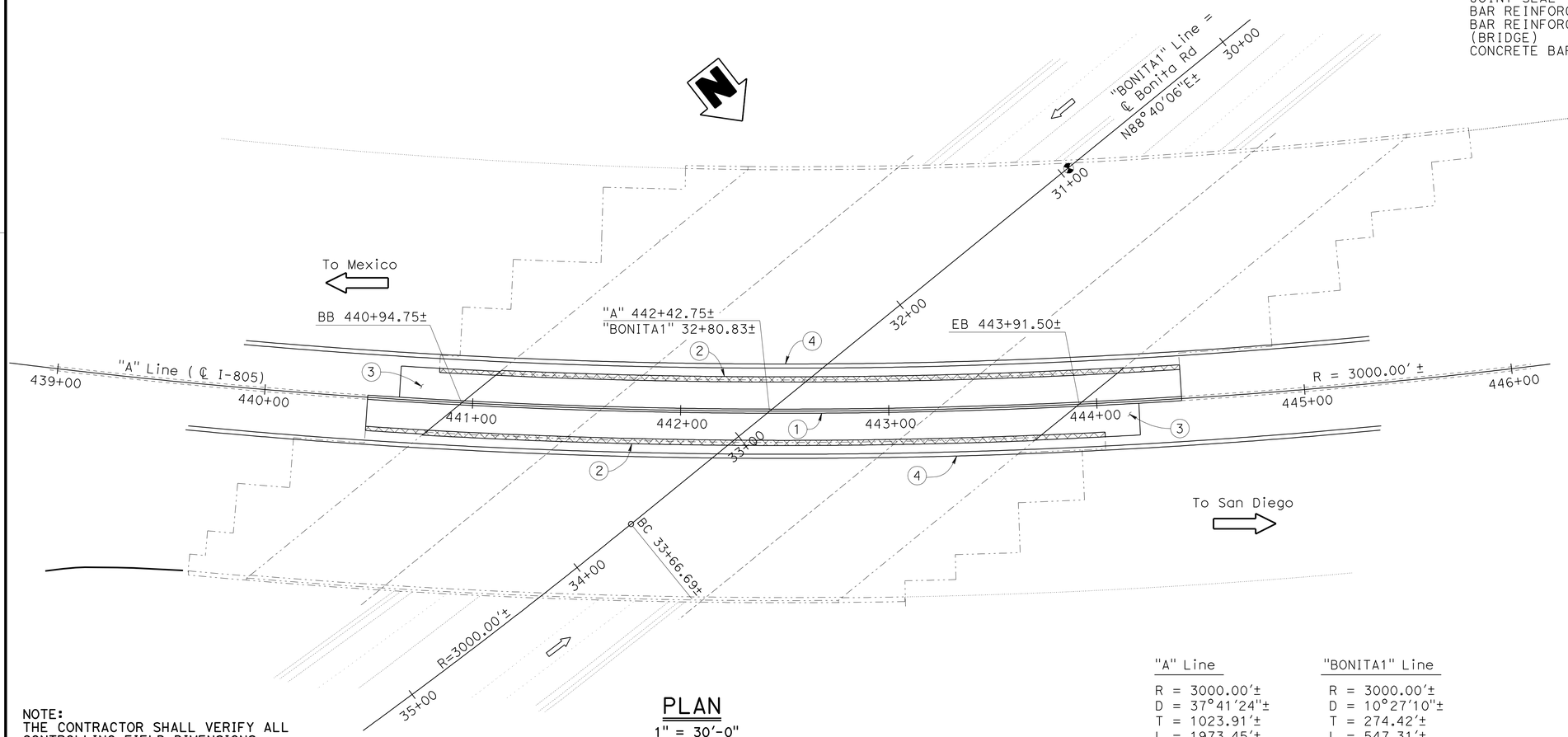

PLAN

1" = 30'-0"

NOTES:

1. Concrete Barrier Type 60A Modified
2. Remove existing Barrier Railing (Type 9), Overhang and portion of Abutment
3. Structure Approach Type N(30D)
4. Temporary Railing (Type K), see 'Road Plans'

LEGEND:

- Indicates existing Structure
- Indicates Bridge removal (portion)
- Indicates direction of traffic
- Point of Minimum Vertical Clearance

"A" Line	"BONITA1" Line
R = 3000.00'±	R = 3000.00'±
D = 37°41'24"±	D = 10°27'10"±
T = 1023.91'±	T = 274.42'±
L = 1973.45'±	L = 547.31'±

NOTE:
THE CONTRACTOR SHALL VERIFY ALL CONTROLLING FIELD DIMENSIONS BEFORE ORDERING OR FABRICATING ANY MATERIAL.

Douglas J. Dunrud
DESIGN ENGINEER

	BY	CHECKED
DESIGN	T. Skreslet	D. Dunrud
DETAILS	T. Nguyen	D. Dunrud
QUANTITIES	T. Skreslet	D. Dunrud

LOAD & RESISTANCE FACTOR DESIGN — LIVE LOADING: HL93 W/"LOW-BOY"; PERMIT DESIGN VEHICLE
LAYOUT — BY T. Skreslet — CHECKED D. Dunrud
SPECIFICATIONS — BY R. Franti — PLANS AND SPECS COMPARED X

ORIGINAL SCALE IN INCHES FOR REDUCED PLANS 0 1 2 3

STATE OF CALIFORNIA
DEPARTMENT OF TRANSPORTATION

DIVISION OF ENGINEERING SERVICES
STRUCTURE DESIGN
DESIGN BRANCH 14

BRIDGE NO. 57-0637
POST MILE 7.80

BONITA ROAD UNDERCROSSING (WIDEN)
GENERAL PLAN NO. 1

UNIT: 3613
PROJECT NUMBER & PHASE: 11000200501
CONTRACT NO.: 11-2T1811

DISREGARD PRINTS BEARING EARLIER REVISION DATES
REVISION DATES: 07-12-11 01-25-11 04-05-11 06-16-11
SHEET 1 OF 18

STRUCTURES DESIGN GENERAL PLAN SHEET (ENGLISH) (REV.09-01-10)

FILE => c_57-0637-a-gp01.dgn

USERNAME => s124496 DATE PLOTTED => 09-DEC-2011 TIME PLOTTED => 11:01

DIST	COUNTY	ROUTE	POST MILES TOTAL PROJECT	SHEET No.	TOTAL SHEETS
11	SD	54,805	1.8,5.5/9.4	555	635

Tony Skreslet
REGISTERED CIVIL ENGINEER — DATE 8-25-11

12-5-11
PLANS APPROVAL DATE

REGISTERED PROFESSIONAL ENGINEER — TONY SKRESLET No. C50676 Exp. 09-30-11 CIVIL — STATE OF CALIFORNIA

The State of California or its officers or agents shall not be responsible for the accuracy or completeness of electronic copies of this plan sheet.

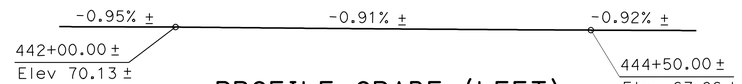

PROFILE GRADE (LEFT)
No Scale

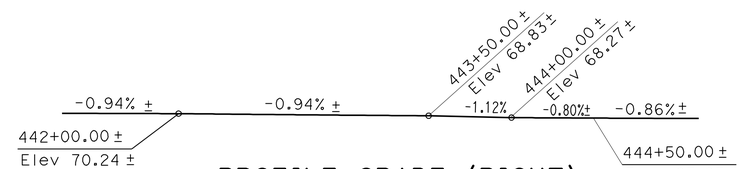

PROFILE GRADE (RIGHT)
No Scale

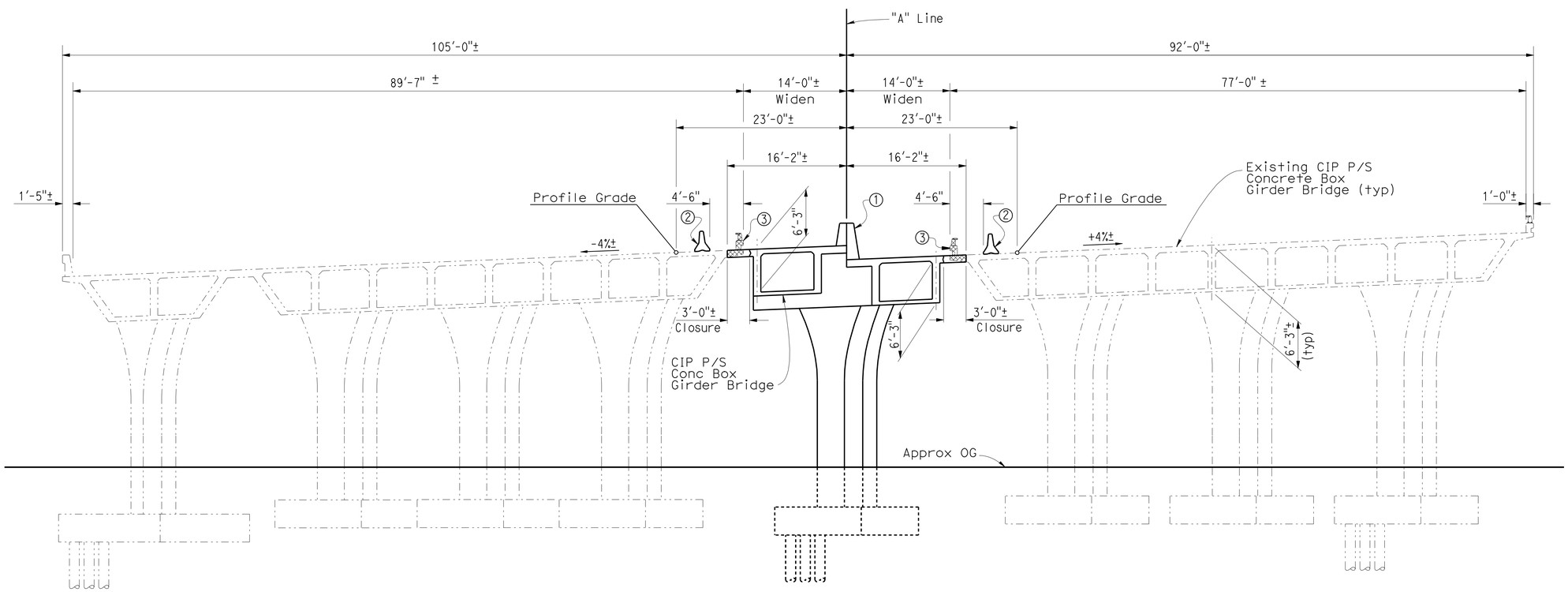

TYPICAL SECTION
1/8" = 1'-0"

NOTES:

① Concrete Barrier Type 60A Modified
② Temporary Railing (Type K)
③ Remove existing Bridge Rail (Type 9) and portion of Overhang and Abutment.

NOTE:
THE CONTRACTOR SHALL VERIFY ALL CONTROLLING FIELD DIMENSIONS BEFORE ORDERING OR FABRICATING ANY MATERIAL.

Douglas J. Dunrud
DESIGN ENGINEER

	BY	CHECKED
DESIGN	T. Skreslet	D. Dunrud
DETAILS	D.W.Radley	D. Dunrud
QUANTITIES	T. Skreslet	D. Dunrud

LOAD & RESISTANCE FACTOR DESIGN — LIVE LOADING: HL93 W/"LOW-BOY"; PERMIT DESIGN VEHICLE

	BY	CHECKED
LAYOUT	T. Skreslet	D. Dunrud
SPECIFICATIONS	R. Franti	PLANS AND SPECS COMPARED X

ORIGINAL SCALE IN INCHES FOR REDUCED PLANS 0 1 2 3

STATE OF CALIFORNIA
DEPARTMENT OF TRANSPORTATION

DIVISION OF ENGINEERING SERVICES
STRUCTURE DESIGN
DESIGN BRANCH 14

UNIT: 3613
PROJECT NUMBER & PHASE: 11000200501
CONTRACT NO.: 11-2T1811

BRIDGE NO. 57-0637
POST MILE 7.80

BONITA ROAD UNDERCROSSING (WIDEN)
GENERAL PLAN NO. 2

DISREGARD PRINTS BEARING EARLIER REVISION DATES

REVISION DATES: 01-25-11 04-05-11 04-15-11 06-13-11

SHEET 2 OF 18

STRUCTURES DESIGN GENERAL PLAN SHEET (ENGLISH) (REV.09-01-10)

FILE => c_57-0637-a-gp02.dgn

USERNAME => s124496 DATE PLOTTED => 09-DEC-2011 TIME PLOTTED => 11:01

DIST	COUNTY	ROUTE	POST MILES TOTAL PROJECT	SHEET No.	TOTAL SHEETS
11	SD	54,805	1.8,5.5/9.4	556	635

Tony Skreslet 8-25-11
REGISTERED CIVIL ENGINEER DATE

12-5-11
PLANS APPROVAL DATE

REGISTERED PROFESSIONAL ENGINEER TONY SKRESLET No. C50676 Exp. 09-30-11 CIVIL STATE OF CALIFORNIA

The State of California or its officers or agents shall not be responsible for the accuracy or completeness of electronic copies of this plan sheet.

GENERAL NOTES
LOAD RESISTANCE FACTOR DESIGN

DESIGN:	AASHTO LRFD Bridge Design Specifications - 4th Edition 2007, including California Amendments dated December 2008 and September 2010
SEISMIC DESIGN:	CALTRANS SEISMIC DESIGN CRITERIA (SDC), VERSION 1.5 SEPTEMBER 2009
DEAD LOAD:	Includes 35 psf for Future Wearing Surface
LIVE LOADING:	HL-93 and Low-Boy and Permit Design Load
SEISMIC LOADING	See 'Site Specific Acceleration Response Spectra'
REINFORCED CONCRETE:	fy = 60 ksi f'c = See 'Concrete Strength and Type Limits
PRESTRESSED CONCRETE:	See 'Prestressing Notes' on "GIRDER LAYOUT" sheet
STRUCTURAL STEEL:	fy = ASTM A709 Grade 50

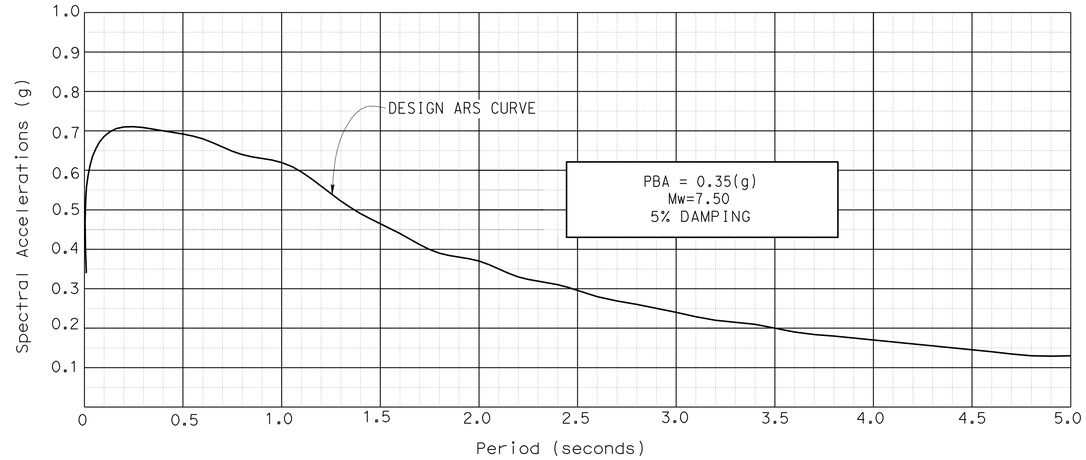

SITE SPECIFIC ACCELERATION RESPONSE SPECTRA

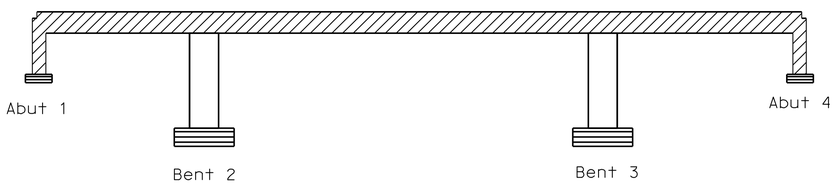

Structural Concrete, Bridge (f'c = 3.6 ksi @ 28 days)

Structural Concrete, Bridge (f'c = 5.0 ksi @ 28 days)

Structural Concrete, Bridge Footing (f'c = 3.6 ksi @ 28 days)

CONCRETE STRENGTH AND TYPE LIMITS

No Scale

PILE DATA TABLE

LOCATION	PILE TYPE	NOMINAL RESISTANCE (Kips) Compression	NOMINAL RESISTANCE (Kips) Tension	DESIGN TIP ELEVATION (FT)	SPECIFIED TIP ELEVATION (FT)
Abutment 1	HP 10X57	240	0	35.0 (a)	35.0
Bent 2	HP 14X89	290	200	1.0 (b) 10.0 (a)	1.0
Bent 3	HP 14X89	290	200	-5.0 (b) 4.0 (a)	-5.0
Abutment 4	HP 10X57	220	0	6.0 (a)	6.0

NOTES:

1. Design Tip controlled by (a) Compression (b) Tension (c) Lateral
2. Abutment HP 10x57 Piles shall have lugs installed to aid in achieving the required nominal resistance in Compression. For 'STEEL PILE LUG DETAIL', see "ABUTMENT LAYOUT" sheet

INDEX TO PLANS

SHEET NO.	TITLE
1	GENERAL PLAN NO. 1
2	GENERAL PLAN NO. 2
3	INDEX TO PLANS
4	FOUNDATION PLAN
5	ABUTMENT LAYOUT
6	BENT LAYOUT
7	BENT DETAILS
8	BENT FOOTING DETAILS
9	TYPICAL SECTION
10	GIRDER LAYOUT
11	STRUCTURE APPROACH TYPE N (30D)
12	STRUCTURE APPROACH DRAINAGE DETAILS
13	LOG OF TEST BORINGS 1 OF 6
14	LOG OF TEST BORINGS 2 OF 6
15	LOG OF TEST BORINGS 3 OF 6
16	LOG OF TEST BORINGS 4 OF 6
17	LOG OF TEST BORINGS 5 OF 6
18	LOG OF TEST BORINGS 6 OF 6

STANDARD PLANS DATED MAY 2006

A10A	ABBREVIATIONS
A62C	LIMITS OF PAYMENT FOR EXCAVATION AND BACKFILL BRIDGE
B0-1	BRIDGE DETAILS
B0-3	BRIDGE DETAILS
B0-5	BRIDGE DETAILS
B0-13	BRIDGE DETAILS
B6-21	JOINT SEALS (MAXIMUM MOVEMENT RATING = 2)
B7-1	BOX GIRDER DETAILS
B8-5	CAST-IN-PLACE PRESTRESSED GIRDER DEAILS

STANDARD PLAN SHEET NO.

DETAIL NO.

NOTE:
THE CONTRACTOR SHALL VERIFY ALL CONTROLLING FIELD DIMENSIONS BEFORE ORDERING OR FABRICATING ANY MATERIAL.

	BY	CHECKED
DESIGN	T. Skreslet	D. Dunrud
DETAILS	T. Nguyen	D. Dunrud
QUANTITIES	T. Skreslet	D. Dunrud

STATE OF CALIFORNIA
DEPARTMENT OF TRANSPORTATION

DIVISION OF ENGINEERING SERVICES
STRUCTURE DESIGN
DESIGN BRANCH 14

BRIDGE NO. 57-0637
POST MILE 7.80

BONITA ROAD UNDERCROSSING (WIDEN)
INDEX TO PLANS

STRUCTURES DESIGN DETAIL SHEET (ENGLISH) (REV. 09-01-10)

ORIGINAL SCALE IN INCHES FOR REDUCED PLANS 0 1 2 3

UNIT: 3613
PROJECT NUMBER & PHASE: 11000200501
CONTRACT NO.: 11-2T1811

DISREGARD PRINTS BEARING EARLIER REVISION DATES

REVISION DATES 8-25-11 10-12-11 08-02-11 08-04-11

SHEET 3 OF 18

FILE => c_57-0637-a-itp.dgn

USERNAME => s124496 DATE PLOTTED => 09-DEC-2011 TIME PLOTTED => 11:01

DIST	COUNTY	ROUTE	POST MILES TOTAL PROJECT	SHEET No	TOTAL SHEETS
11	SD	54,805	1.8,5.5/9.4	557	635

Tony Skreslet 12-23-02
REGISTERED CIVIL ENGINEER DATE

12-5-11
PLANS APPROVAL DATE

The State of California or its officers or agents shall not be responsible for the accuracy or completeness of electronic copies of this plan sheet.

REGISTERED PROFESSIONAL ENGINEER TONY SKRESLET No. C50676 Exp. 09-30-11 CIVIL STATE OF CALIFORNIA

CURVE DATA

No.	R	Δ	T	L
Ⓐ	3000.00±	37°41'35"±	1024.01±	1973.61±
Ⓑ	3000.00±	4°45'30"±	124.64±	249.15±

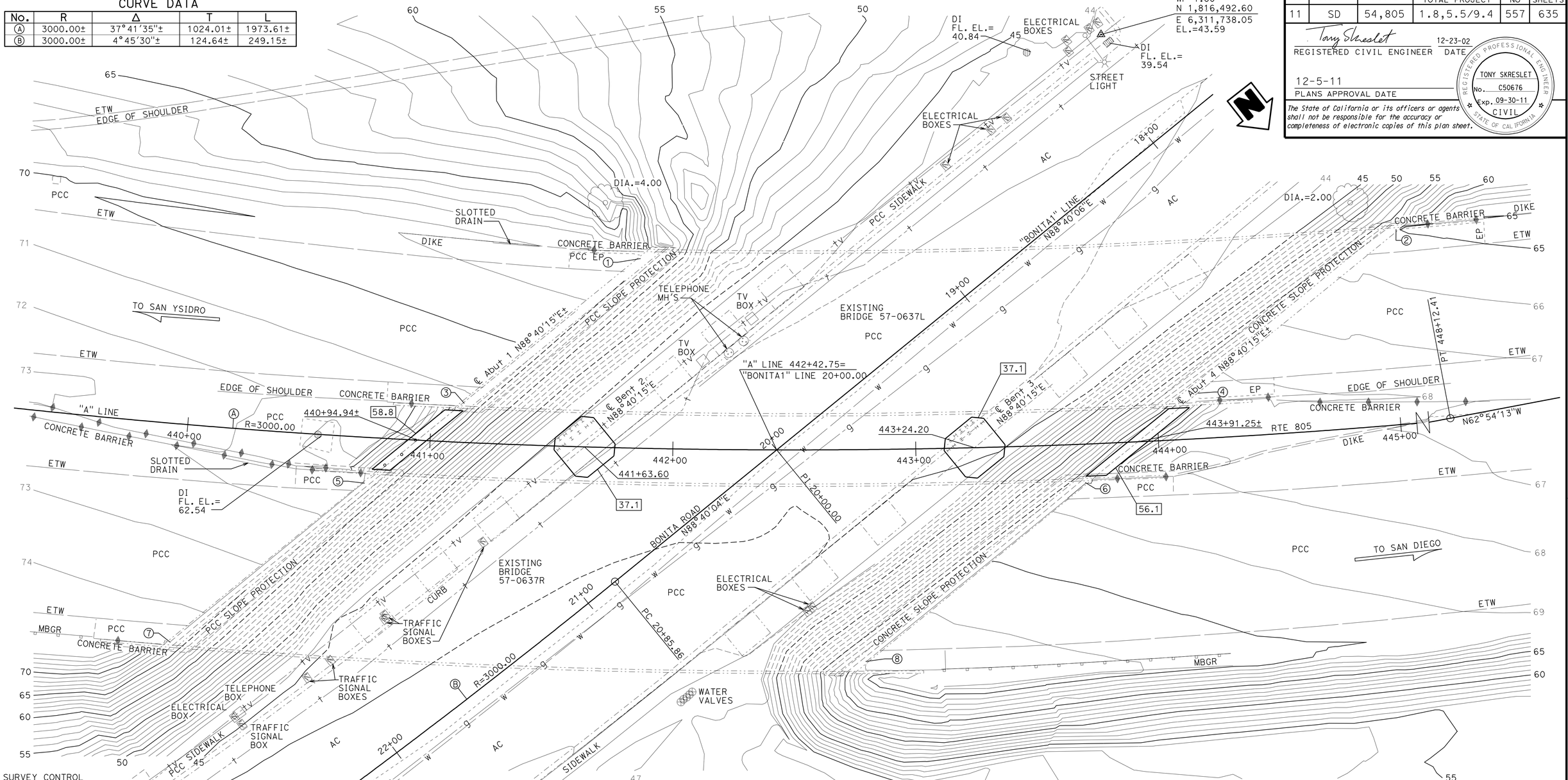

SURVEY CONTROL

WP 7.80
Fnd SCRIBED "+" IN SIDEWALK
168.20 FT Rt. "A" LINE RTE 805
Sta. 443+83.81
N 1,816,492.60
E 6,311,738.05
Elev. = 43.59

WP 7.81
Fnd PK ABD WASHER IN SIDEWALK
188.09 FT Rt. "A" LINE RTE 805
Sta. 441+08.39
N 1,816,603.67
E 6,312,174.68
Elev. = 46.98

WP 7.81
N 1,816,603.67
E 6,312,174.68
EL.=46.98

Bridge Location (Left)

① - 78.06 Lt. "A" Line Rte 805, Sta.441+85.05, Elev.=68.10 ±
② - 80.29 Lt. "A" Line Rte 805, Sta.445+04.88, Elev.=65.14 ±
③ - 15.99 Lt. "A" Line Rte 805, Sta.441+13.40, Elev.=71.20 ±
④ - 18.66 Lt. "A" Line Rte 805, Sta.444+16.03, Elev.=66.44 ±

Bridge Location (Right)

⑤ - 18.92 Rt. "A" Line Rte 805, Sta.440+74.14, Elev.=71.25 ±
⑥ - 15.80 Rt. "A" Line Rte 805, Sta.443+69.18, Elev.=68.40 ±
⑦ - 89.95 Rt. "A" Line Rte 805, Sta.440+00.32, Elev.=74.58 ±
⑧ - 87.22 Rt. "A" Line Rte 805, Sta.442+78.53, Elev.=72.06 ±

NOTE:
THE CONTRACTOR SHALL VERIFY ALL CONTROLLING FIELD DIMENSIONS BEFORE ORDERING OR FABRICATING ANY MATERIAL.

NOTE: ALL UTILITY LINES ARE PER DISTRICT UTILITY MAP.

NOTES:

1. Utilities are per district utility map, dated 5-7-2007. Locations are approximate.
2. Utilities are per district utility map, dated 4-5-2010. Locations are approximate.

-·-·-·- Indicates Existing Footings
Indicates Piles (not all shown)
Indicates bottom of Footing elevation

PRELIMINARY INVESTIGATION SECTION

SCALE	VERT.DATUM NAVD88	PHOTOGRAMMETRY AS OF: X			
1"=20'	HORZ.DATUM NAD83 (2007)	SURVEYED	BY District	CHECKED	BY J.Pallares 09/2010
ALIGNMENT TIES Dist.Traverse Sheet		DRAFTED	BY T.Zolnikov 09/2010	CHECKED	BY T.Schmalz 09/2010

	BY	CHECKED
DESIGN	T. Skreslet	D. Dunrud
DETAILS	T. Nguyen	D. Dunrud
QUANTITIES	T. Skreslet	D. Dunrud

STATE OF CALIFORNIA
DEPARTMENT OF TRANSPORTATION

DIVISION OF ENGINEERING SERVICES
STRUCTURE DESIGN
DESIGN BRANCH 14

BRIDGE NO. 57-0637
POST MILE 7.80

BONITA ROAD UNDERCROSSING (WIDEN)
FOUNDATION PLAN

STRUCTURES FOUNDATION PLAN SHEET (ENGLISH) (REV. 10/25/05)

ORIGINAL SCALE IN INCHES FOR REDUCED PLANS 0 1 2 3

CU 3613
PN & PHASE: 11000200501

DISREGARD PRINTS BEARING EARLIER REVISION DATES

REVISION DATES: 09-16-10 01-13-11 02-25-11 02-11-11 04-06-11 04-13-11 04-14-11 06-16-11

SHEET 4 OF 18

FILE => c_57-0637-b-fp.dgn

USERNAME => s124496 DATE PLOTTED => 09-DEC-2011 TIME PLOTTED => 11:01

DIST	COUNTY	ROUTE	POST MILES TOTAL PROJECT	SHEET No.	TOTAL SHEETS
11	SD	54,805	1.8,5.5/9.4	558	635

Tony Skreslet 8-25-11
REGISTERED CIVIL ENGINEER DATE

12-5-11
PLANS APPROVAL DATE

REGISTERED PROFESSIONAL ENGINEER TONY SKRESLET No. C50676 Exp. 09-30-11 CIVIL STATE OF CALIFORNIA

The State of California or its officers or agents shall not be responsible for the accuracy or completeness of electronic copies of this plan sheet.

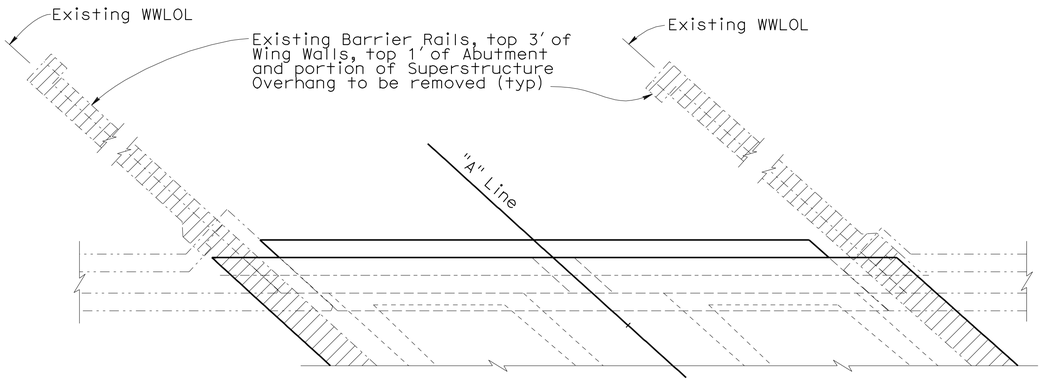

PLAN
3/16" = 1'-0"

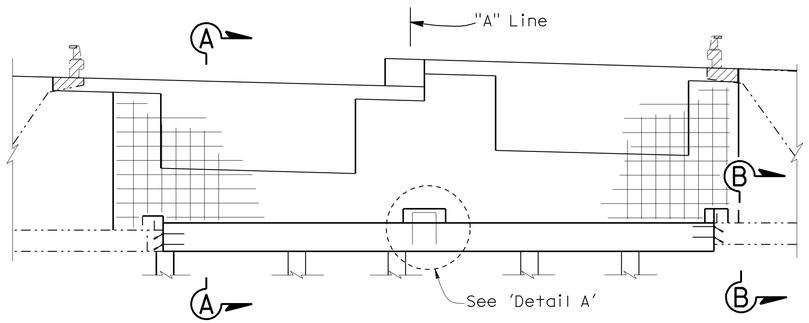

NOTE: Elevation taken at Face of Abutment

ELEVATION
3/16" = 1'-0"

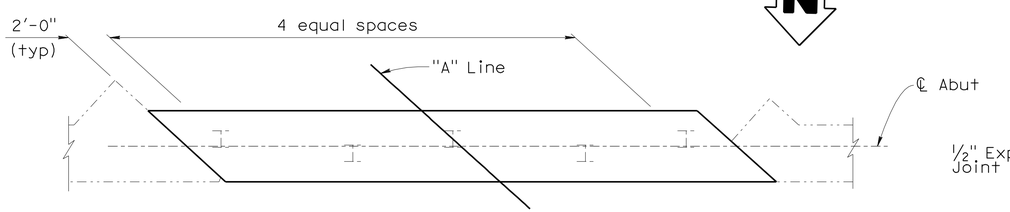

FOOTING PLAN
3/16" = 1'-0"

NOTE:
THE CONTRACTOR SHALL VERIFY ALL CONTROLLING FIELD DIMENSIONS BEFORE ORDERING OR FABRICATING ANY MATERIAL.

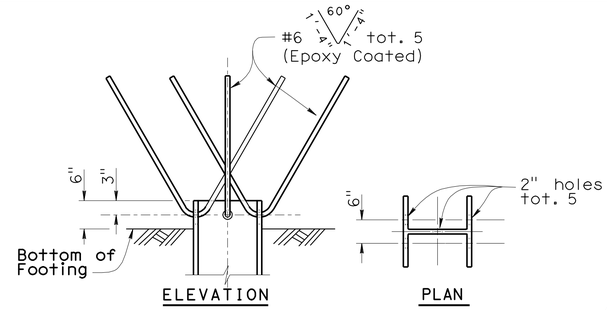

STEEL PILE ANCHOR DETAIL
No Scale

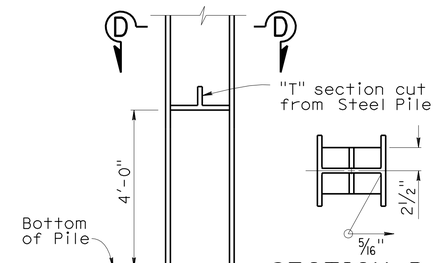

SECTION D-D
STEEL PILE LUG DETAIL
No Scale

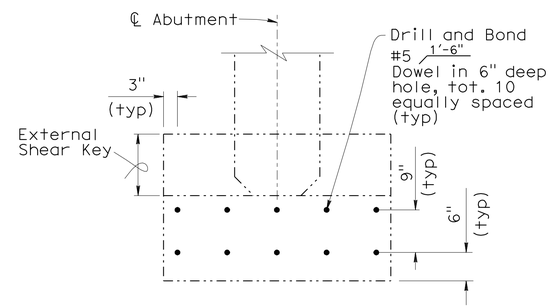

SECTION B-B
No Scale

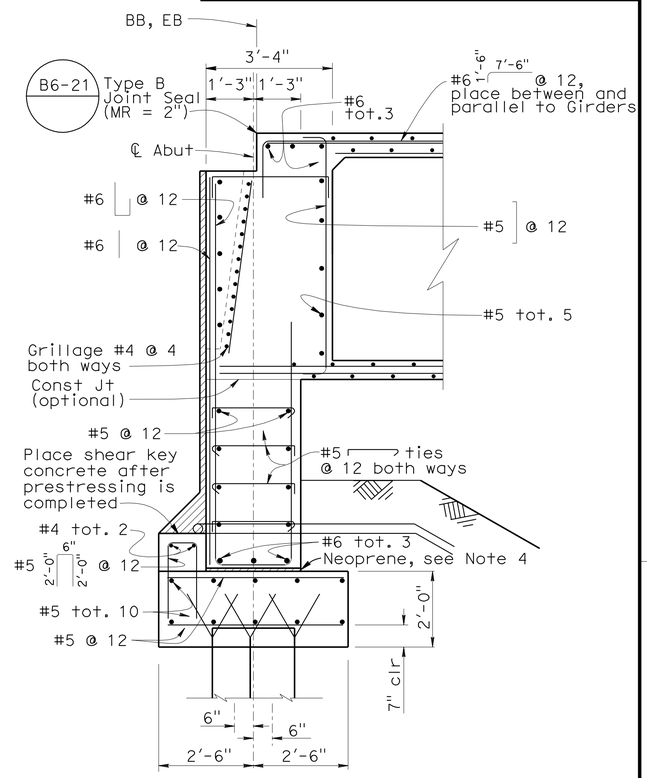

SECTION A-A
B8-5
1/2" = 1'-0"

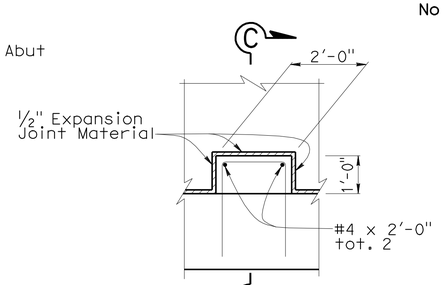

DETAIL A
1/2" = 1'-0"

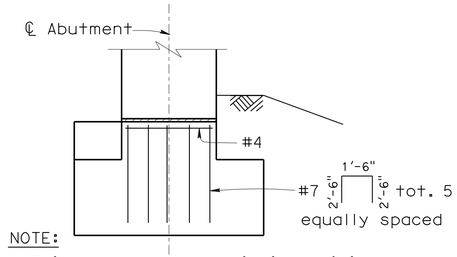

NOTE:
Reinforcement shown is in addition to that shown on 'Section A-A'.

SECTION C-C
1/2" = 1'-0"

NOTES:
1. Abutment 1 shown, Abutment 3 similar
2. Inside Face of New Abutment Stem Wall shall match existing Stem Wall
3. New Approach Slab and Barrier Rails not shown
4. 2'-0"x1/4" thick Neoprene sheet coat with SAE AS 8660 grease and top with 2'-4" 14 gauge galvanized sheet metal

LEGEND:
Indicates Steel "H" Piles
Indicates portion of Existing Abutment and Superstructure to be removed

DESIGN	BY T. Skreslet	CHECKED D. Dunrud	
DETAILS	BY L. Xiong	CHECKED D. Dunrud	
QUANTITIES	BY T. Skreslet	CHECKED D. Dunrud	

STATE OF CALIFORNIA
DEPARTMENT OF TRANSPORTATION

DIVISION OF ENGINEERING SERVICES
STRUCTURE DESIGN
DESIGN BRANCH 14

BRIDGE NO. 57-0637
POST MILE 7.80

BONITA ROAD UNDERCROSSNG (WIDEN)
ABUTMENT LAYOUT

STRUCTURES DESIGN DETAIL SHEET (ENGLISH) (REV. 09-01-10)

ORIGINAL SCALE IN INCHES FOR REDUCED PLANS 0 1 2 3

UNIT: 3613
PROJECT NUMBER & PHASE: 11000200501
CONTRACT NO.: 11-2T1811

DISREGARD PRINTS BEARING EARLIER REVISION DATES

REVISION DATES 08-12-11 08-01-11 08-02-11 08-05-11

SHEET 5 OF 18

FILE => c_57-0637-c-abutlo.dgn

USERNAME => s124496 DATE PLOTTED => 09-DEC-2011 TIME PLOTTED => 11:01

DIST	COUNTY	ROUTE	POST MILES TOTAL PROJECT	SHEET No.	TOTAL SHEETS
11	SD	54,805	1.8,5.5/9.4	559	635

Tony Skreslet 8-25-11
REGISTERED CIVIL ENGINEER DATE

12-5-11
PLANS APPROVAL DATE

REGISTERED PROFESSIONAL ENGINEER TONY SKRESLET No. C50676 Exp. 09-30-11 CIVIL STATE OF CALIFORNIA

The State of California or its officers or agents shall not be responsible for the accuracy or completeness of electronic copies of this plan sheet.

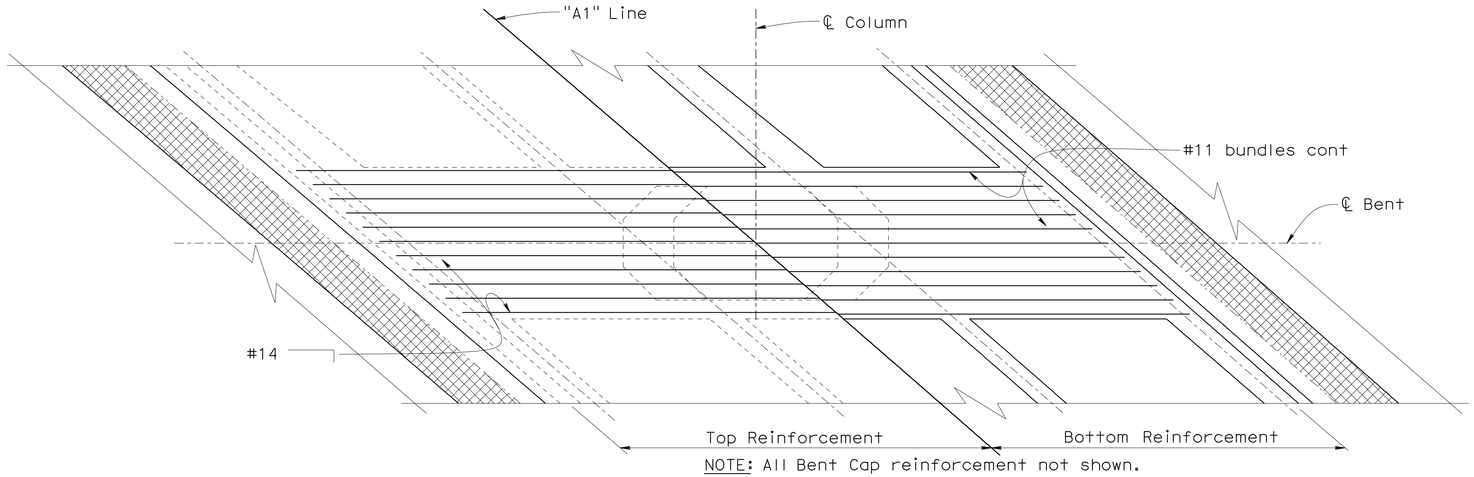

NOTE: All Bent Cap reinforcement not shown.

PLAN
1/4" = 1'-0"

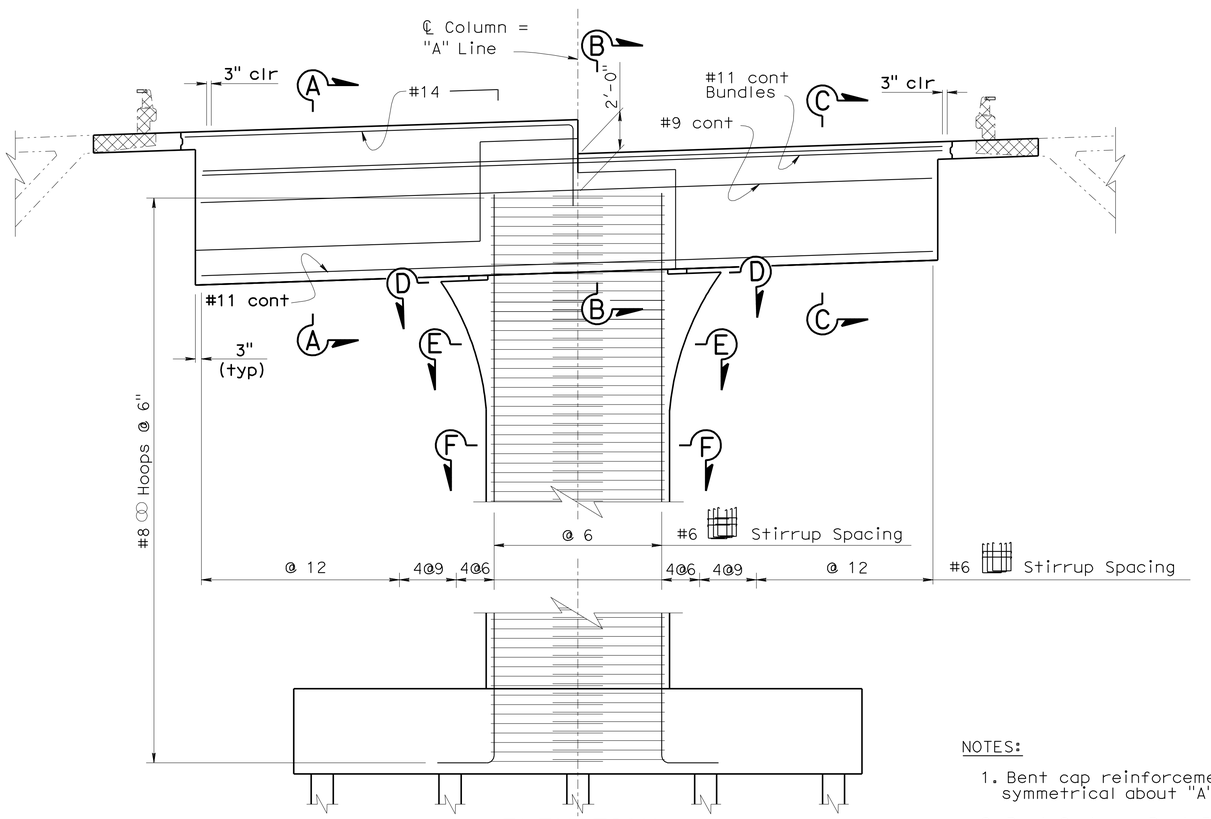

ELEVATION
1/4" = 1'-0"

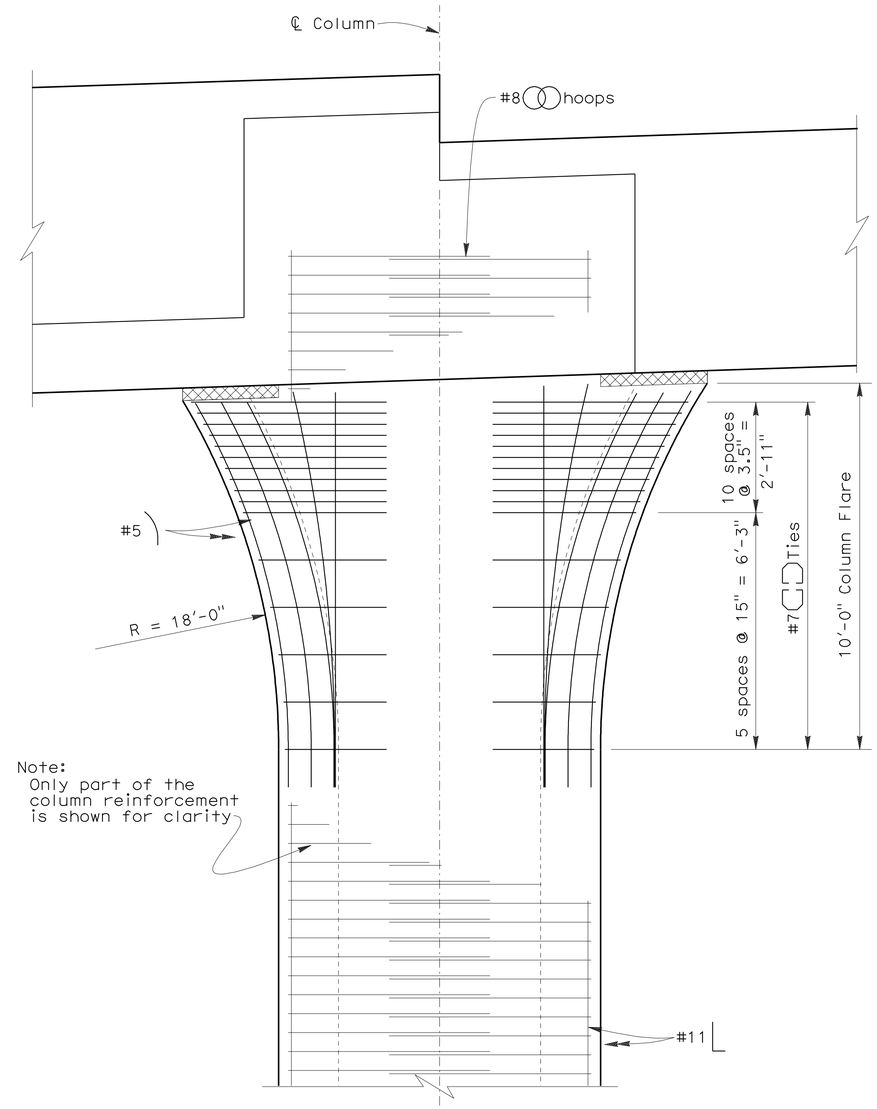

Note:
Only part of the column reinforcement is shown for clarity

ELEVATION-COLUMN FLARE
1/2" = 1'-0"

NOTES:

1. Bent cap reinforcement is symmetrical about "A" Line.
2. Bent 2 shown, Bent 3 similar.

NOTE:
THE CONTRACTOR SHALL VERIFY ALL CONTROLLING FIELD DIMENSIONS BEFORE ORDERING OR FABRICATING ANY MATERIAL.

	BY	CHECKED
DESIGN	D. Dunrud	T. Skreslet
DETAILS	L. Xiong / W. Zhang	T. Skreslet
QUANTITIES	T. Skreslet	D. Dunrud

STATE OF CALIFORNIA
DEPARTMENT OF TRANSPORTATION

DIVISION OF ENGINEERING SERVICES
STRUCTURE DESIGN
DESIGN BRANCH 14

BRIDGE NO. 57-0637
POST MILE 7.80

BONITA ROAD UNDERCROSSING (WIDEN)
BENT LAYOUT

STRUCTURES DESIGN DETAIL SHEET (ENGLISH) (REV. 09-01-10)

ORIGINAL SCALE IN INCHES FOR REDUCED PLANS 0 1 2 3

UNIT: 3613
PROJECT NUMBER & PHASE: 11000200501
CONTRACT NO.: 11-2T1811

DISREGARD PRINTS BEARING EARLIER REVISION DATES

REVISION DATES: 06-09-11 06-16-11 06-23-11 05-25-11

SHEET 6 OF 18

FILE => c_57-0637-c-bent_lo.dgn

USERNAME => s124496 DATE PLOTTED => 09-DEC-2011 TIME PLOTTED => 11:01

DIST	COUNTY	ROUTE	POST MILES TOTAL PROJECT	SHEET No.	TOTAL SHEETS
11	SD	54,805	1.8,5.5/9.4	560	635

Tony Skreslet 8-25-11
REGISTERED CIVIL ENGINEER DATE

12-5-11
PLANS APPROVAL DATE

REGISTERED PROFESSIONAL ENGINEER TONY SKRESLET No. C50676 Exp. 09-30-11 CIVIL STATE OF CALIFORNIA

The State of California or its officers or agents shall not be responsible for the accuracy or completeness of electronic copies of this plan sheet.

NOTE:
THE CONTRACTOR SHALL VERIFY ALL CONTROLLING FIELD DIMENSIONS BEFORE ORDERING OR FABRICATING ANY MATERIAL.

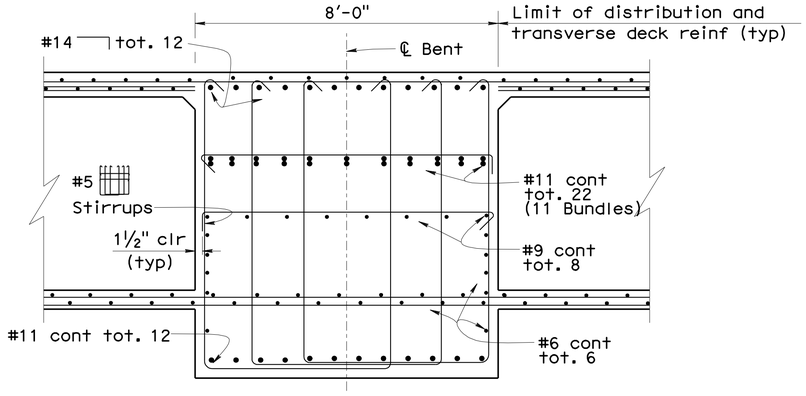

SECTION A-A
½" = 1'-0"

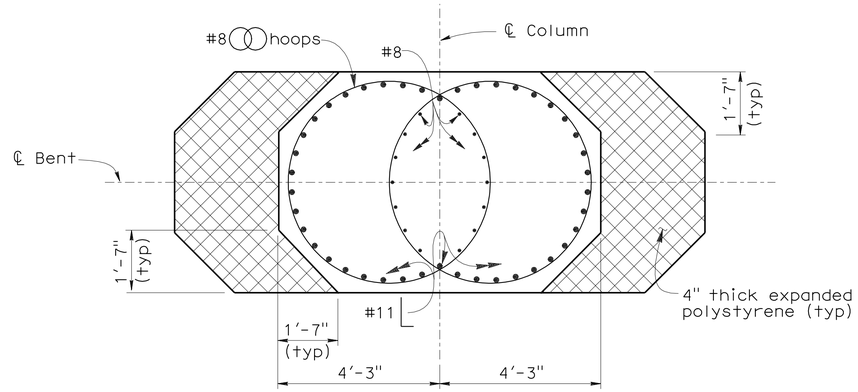

SECTION D-D
½" = 1'-0"

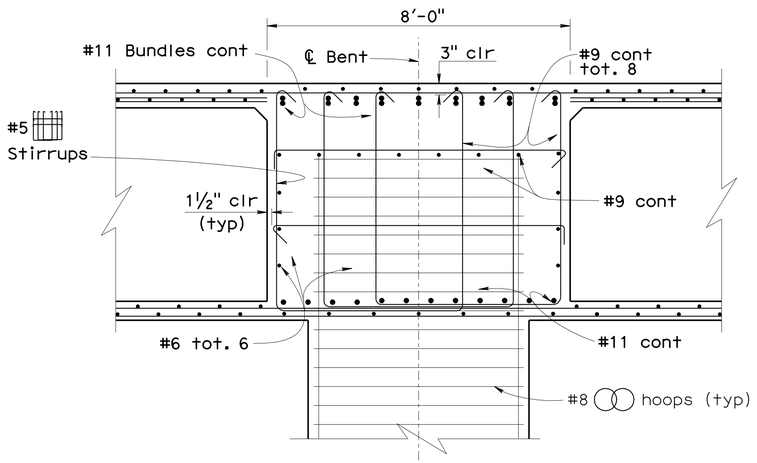

SECTION B-B
½" = 1'-0"

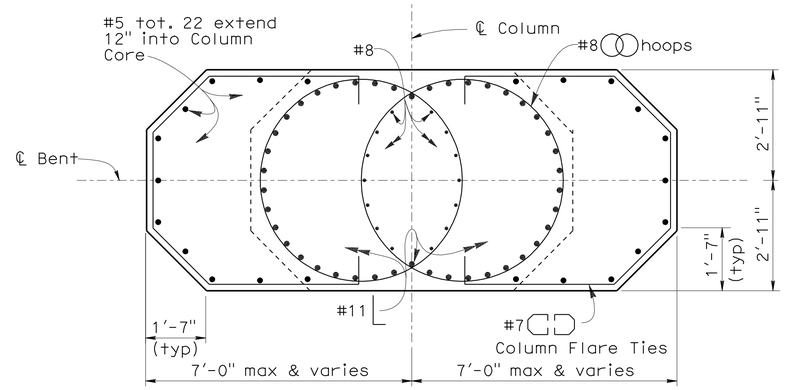

SECTION E-E
½" = 1'-0"

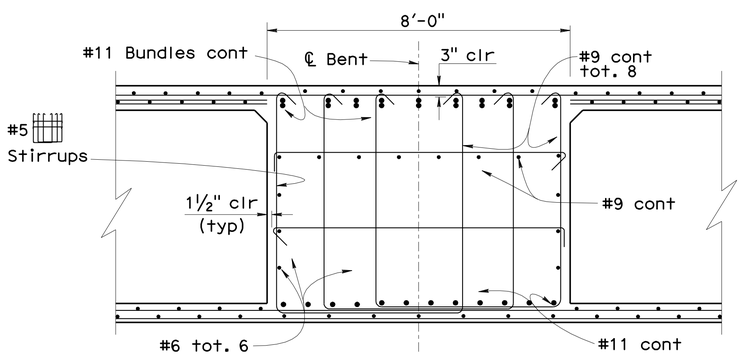

SECTION C-C
½" = 1'-0"

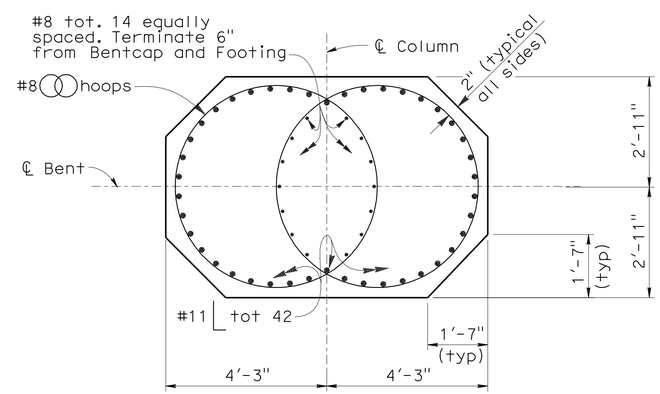

SECTION F-F
½" = 1'-0"

DESIGN	BY D. Dunrud	CHECKED T. Skreslet	
DETAILS	BY L. Xiong / W. Zhang	CHECKED T. Skreslet	
QUANTITIES	BY D. Dunrud	CHECKED T. Skreslet	

STATE OF CALIFORNIA
DEPARTMENT OF TRANSPORTATION

DIVISION OF ENGINEERING SERVICES
STRUCTURE DESIGN
DESIGN BRANCH 14

BRIDGE NO. 57-0637
POST MILE 7.80

BONITA ROAD UNDERCROSSING (WIDEN)
BENT DETAILS

STRUCTURES DESIGN DETAIL SHEET (ENGLISH) (REV. 09-01-10)

ORIGINAL SCALE IN INCHES FOR REDUCED PLANS 0 1 2 3

UNIT: 3613
PROJECT NUMBER & PHASE: 11000200501
CONTRACT NO.: 11-2T1811

DISREGARD PRINTS BEARING EARLIER REVISION DATES

REVISION DATES: 06-09-11 06-23-11 03-23-11 04-25-11

SHEET 7 OF 18

FILE => c_57-0637-d-bent_dt.dgn

USERNAME => s124496 DATE PLOTTED => 09-DEC-2011 TIME PLOTTED => 11:01

DIST	COUNTY	ROUTE	POST MILES TOTAL PROJECT	SHEET No.	TOTAL SHEETS
11	SD	54,805	1.8,5.5/9.4	561	635

Tony Skreslet
REGISTERED CIVIL ENGINEER — DATE 8-25-11

12-5-11
PLANS APPROVAL DATE

REGISTERED PROFESSIONAL ENGINEER — TONY SKRESLET — No. C50676 — Exp. 09-30-11 — CIVIL — STATE OF CALIFORNIA

The State of California or its officers or agents shall not be responsible for the accuracy or completeness of electronic copies of this plan sheet.

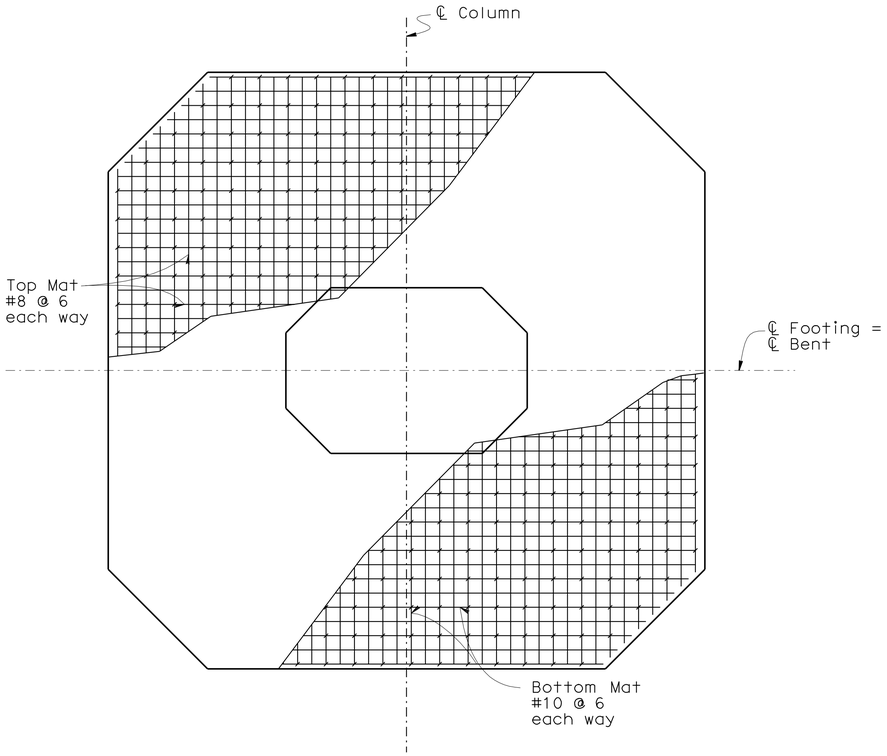

PLAN - REINFORCEMENT

3/8" = 1' - 0"

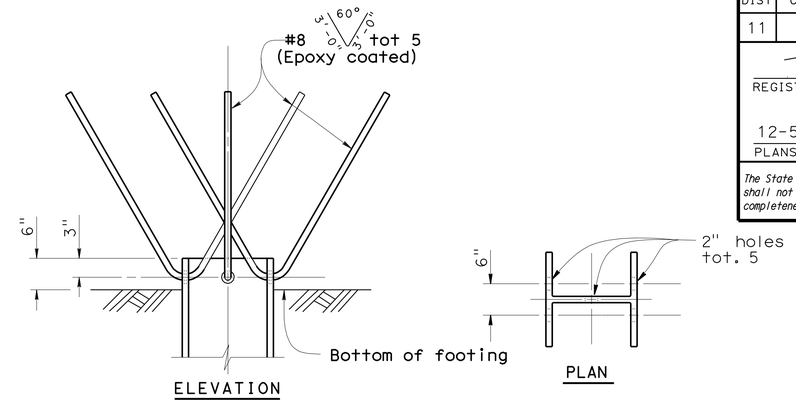

STEEL PILE ANCHOR

No Scale

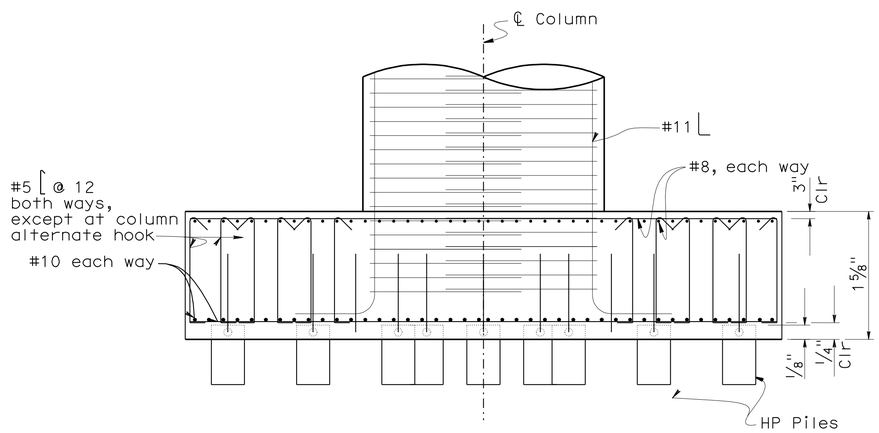

SECTION - REINFORCEMENT

3/8" = 1' - 0"

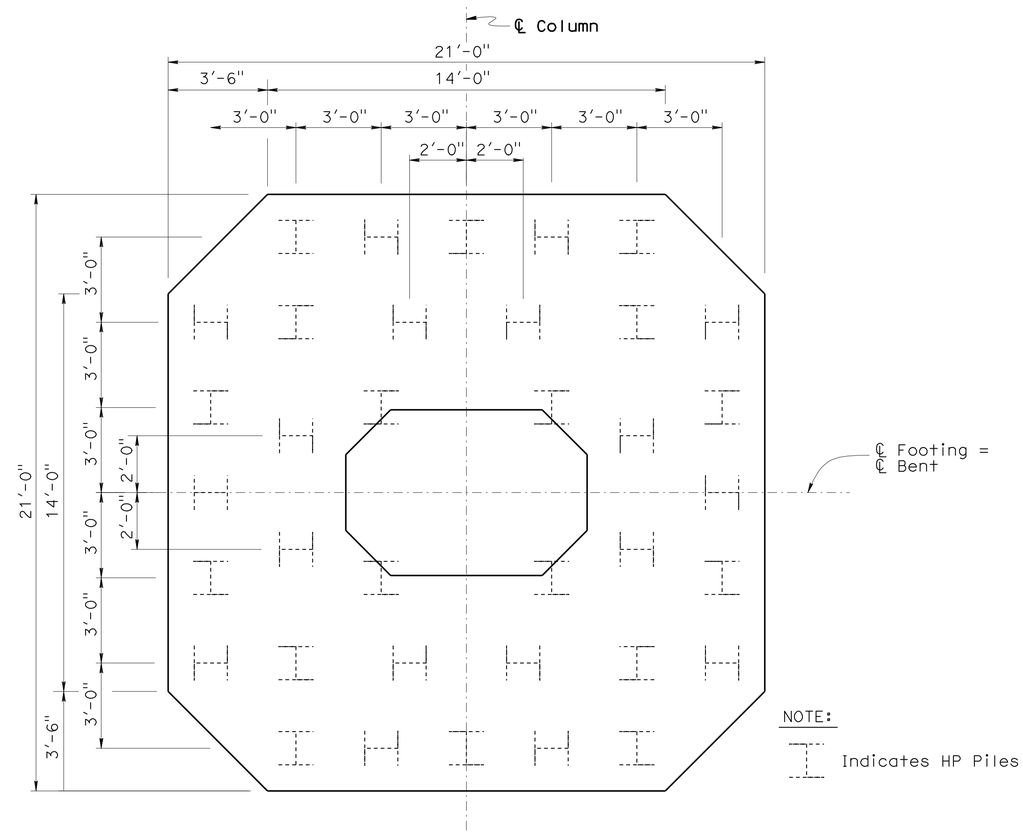

PILE LAYOUT

3/8" = 1' - 0"

NOTE:
THE CONTRACTOR SHALL VERIFY ALL CONTROLLING FIELD DIMENSIONS BEFORE ORDERING OR FABRICATING ANY MATERIAL.

	BY	CHECKED
DESIGN	D. Dunrud	T. Skreslet
DETAILS	K. Kubo / W. Zhang	T. Skreslet
QUANTITIES	D. Dunrud	T. Skreslet

STATE OF CALIFORNIA
DEPARTMENT OF TRANSPORTATION

DIVISION OF ENGINEERING SERVICES
STRUCTURE DESIGN
DESIGN BRANCH 14

BRIDGE NO. 57-0637
POST MILE 7.80

BONITA ROAD UNDERCROSSING (WIDEN)
BENT FOOTING DETAILS

STRUCTURES DESIGN DETAIL SHEET (ENGLISH) (REV. 09-01-10)

ORIGINAL SCALE IN INCHES FOR REDUCED PLANS 0 1 2 3

UNIT: 3613
PROJECT NUMBER & PHASE: 110002000501
CONTRACT NO.: 11-2T1811

DISREGARD PRINTS BEARING EARLIER REVISION DATES

REVISION DATES: 04-14-11 2-4-11 2-16-11 04-29-11

SHEET 8 OF 18

FILE => c_57-0637-d-bent_ftn.dgn

USERNAME => s124496 DATE PLOTTED => 09-DEC-2011 TIME PLOTTED => 11:01

DIST	COUNTY	ROUTE	POST MILES TOTAL PROJECT	SHEET No.	TOTAL SHEETS
11	SD	54,805	1.8,5.5/9.4	562	635

Tony Skreslet 8-25-11
REGISTERED CIVIL ENGINEER DATE

12-5-11
PLANS APPROVAL DATE

REGISTERED PROFESSIONAL ENGINEER TONY SKRESLET No. C50676 Exp. 09-30-11 CIVIL STATE OF CALIFORNIA

The State of California or its officers or agents shall not be responsible for the accuracy or completeness of electronic copies of this plan sheet.

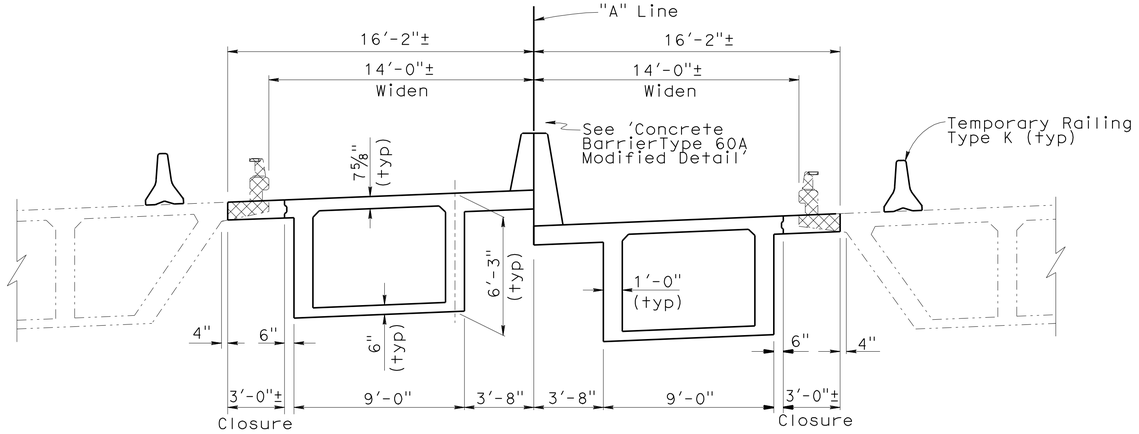

TYPICAL SECTION

¼" = 1'-0"

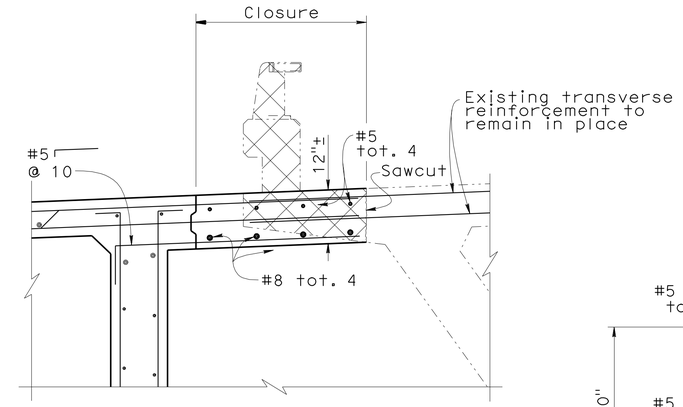

CLOSURE DETAIL

¾" = 1'-0"

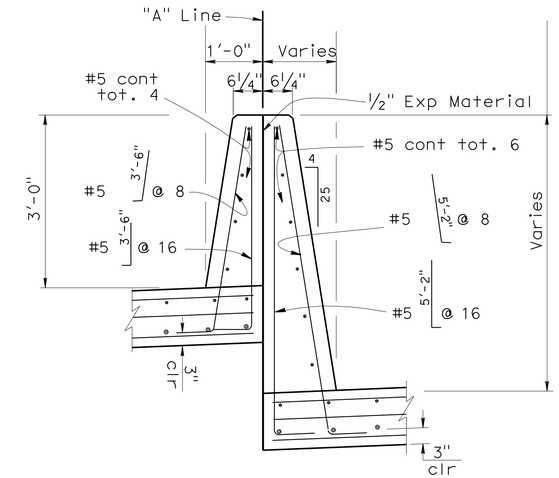

CONCRETE BARRIER TYPE 60A MODIFIED DETAIL

¾" = 1'-0"

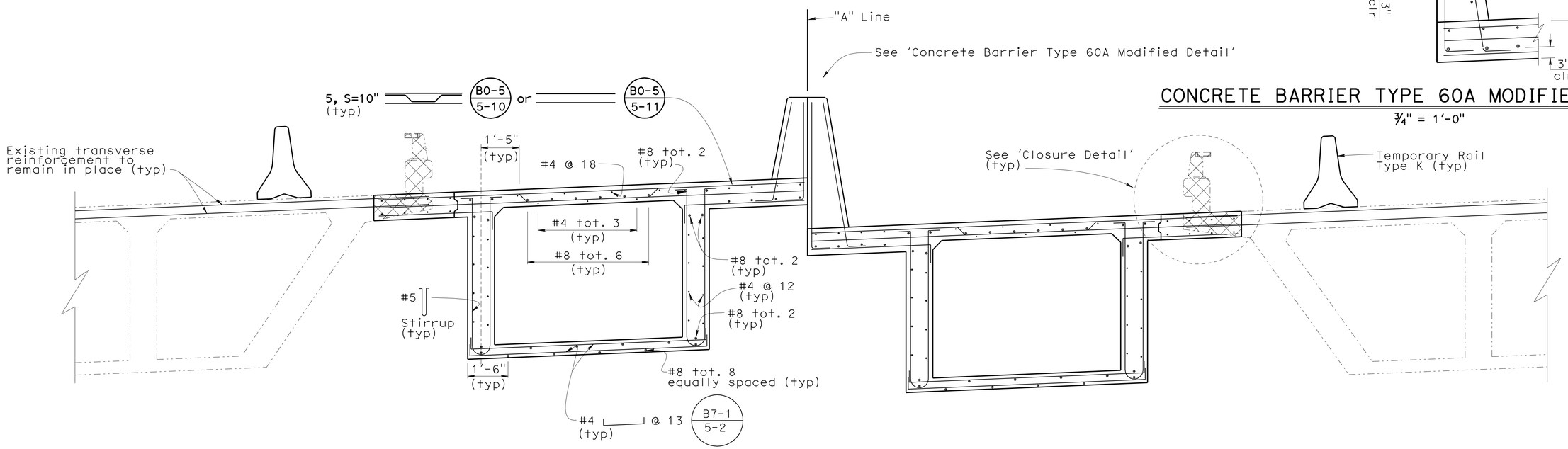

PART TYPICAL SECTION

½" = 1'-0"

NOTE:
THE CONTRACTOR SHALL VERIFY ALL CONTROLLING FIELD DIMENSIONS BEFORE ORDERING OR FABRICATING ANY MATERIAL.

LEGEND:

Indicates Limits of Concrete and Barrier Rail removal

	BY	CHECKED
DESIGN	T. Skreslet	D. Dunrud
DETAILS	K. Kubo	D. Dunrud
QUANTITIES	T. Skreslet	D. Dunrud

STATE OF CALIFORNIA
DEPARTMENT OF TRANSPORTATION

DIVISION OF ENGINEERING SERVICES
STRUCTURE DESIGN
DESIGN BRANCH 14

BRIDGE NO. 57-0637
POST MILE 7.80

BONITA ROAD UNDERCROSSING (WIDEN)
TYPICAL SECTION

STRUCTURES DESIGN DETAIL SHEET (ENGLISH) (REV. 09-01-10)

ORIGINAL SCALE IN INCHES FOR REDUCED PLANS 0 1 2 3

UNIT: 3613
PROJECT NUMBER & PHASE: 11000200501
CONTRACT NO.: 11-2T1811

DISREGARD PRINTS BEARING EARLIER REVISION DATES

REVISION DATES: 2-2-11 5-18-11 06-13-11 06-21-11

SHEET 9 OF 18

FILE => c_57-0637-d-ts.dgn

USERNAME => s124496 DATE PLOTTED => 09-DEC-2011 TIME PLOTTED => 11:01

DIST	COUNTY	ROUTE	POST MILES TOTAL PROJECT	SHEET No.	TOTAL SHEETS
11	SD	54,805	1.8,5.5/9.4	563	635

REGISTERED CIVIL ENGINEER — DATE 8-25-11

12-5-11
PLANS APPROVAL DATE

REGISTERED PROFESSIONAL ENGINEER — TONY SKRESLET No. C50676 Exp. 09-30-11 CIVIL — STATE OF CALIFORNIA

The State of California or its officers or agents shall not be responsible for the accuracy or completeness of electronic copies of this plan sheet.

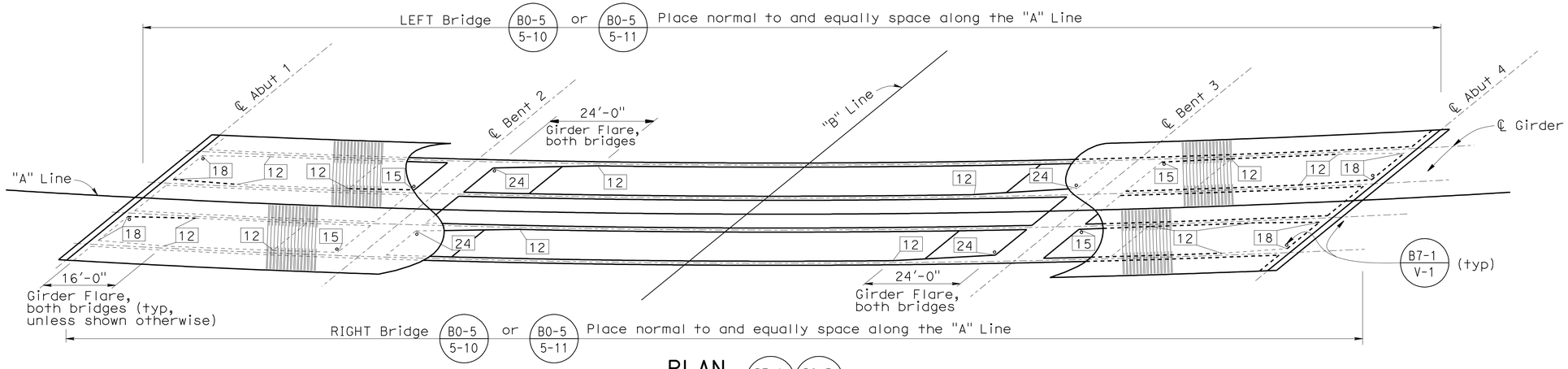

PLAN
B7-1 B8-5
No Scale

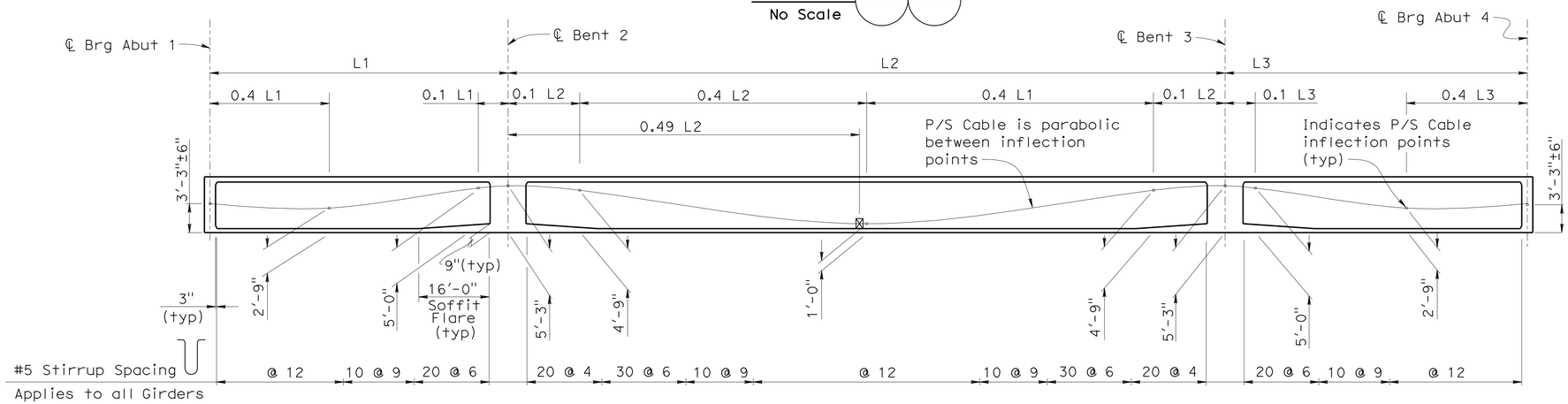

LONGITUDINAL SECTION
B7-1
No Scale

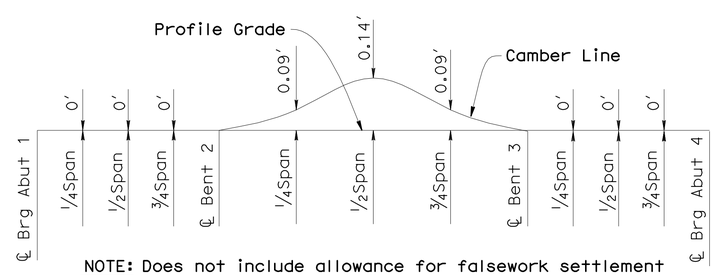

NOTE: Does not include allowance for falsework settlement

CAMBER DIAGRAM
No Scale

NOTE:
THE CONTRACTOR SHALL VERIFY ALL CONTROLLING FIELD DIMENSIONS BEFORE ORDERING OR FABRICATING ANY MATERIAL.

PRESTRESSING NOTES

270 KSI Low Relaxation Strand:

P_{jack} = 3400 kips / widening

Anchor Set = 3/8 in

Total Number of Girders = 2 / widening

Distribution of prestress force (Pjack) between girders shall not exceed the ratio of 3:2. Maximum final force variation between girders shall not exceed 725 kips.

Concrete: f'_c = 5.0 psi @ 28 days

f'_{ci} = 3.5 psi @ time of stressing

Contractor shall submit elongation calculations based on initial stress at

⊠ = _____ times jacking stress.

Two end stressing shall be performed.

Prestressing Notes apply to both the Left Bridge Widening and the Right Bridge Widening

NOTES:

1. "L" is the Girder length measured along ℄ Girder
2. Concrete Barrier not shown

LEGEND:

Indicates Girder Stem width in inches measured perpendicular to ℄ Girder

⊠ Indicates theoretical point of no movement

DESIGN	BY D. Dunrud	CHECKED T. Skreslet	
DETAILS	BY L. Xiong	CHECKED T. Skreslet	
QUANTITIES	BY D. Dunrud	CHECKED T. Skreslet	

STATE OF CALIFORNIA
DEPARTMENT OF TRANSPORTATION

DIVISION OF ENGINEERING SERVICES
STRUCTURE DESIGN
DESIGN BRANCH 14

BRIDGE NO. 57-0637
POST MILE 7.80

BONITA ROAD UNDERCROSSING (WIDEN)
GIRDER LAYOUT

STRUCTURES DESIGN DETAIL SHEET (ENGLISH) (REV. 09-01-10)

ORIGINAL SCALE IN INCHES FOR REDUCED PLANS 0 1 2 3

UNIT: 3613
PROJECT NUMBER & PHASE: 11000200501
CONTRACT NO.: 11-2T1811

DISREGARD PRINTS BEARING EARLIER REVISION DATES
REVISION DATES 04-15-11 06-13-11 08-15-11 08-24-11

SHEET 10 OF 18

FILE => c_57-0637-e-gl.dgn

USERNAME => s124496 DATE PLOTTED => 09-DEC-2011 TIME PLOTTED => 11:01

DIST.	COUNTY	ROUTE	POST MILES TOTAL PROJECT	SHEET NO.	TOTAL SHEETS
11	SD	54,805	1.8,5.5/9.4	564	635

Tony Skreslet 8-25-11
REGISTERED ENGINEER - CIVIL

12-5-11
PLANS APPROVAL DATE

REGISTERED PROFESSIONAL ENGINEER TONY SKRESLET No. C50676 Exp. 09-30-11 CIVIL STATE OF CALIFORNIA

The State of California or its officers or agents shall not be responsible for the accuracy or completeness of electronic copies of this plan sheet.

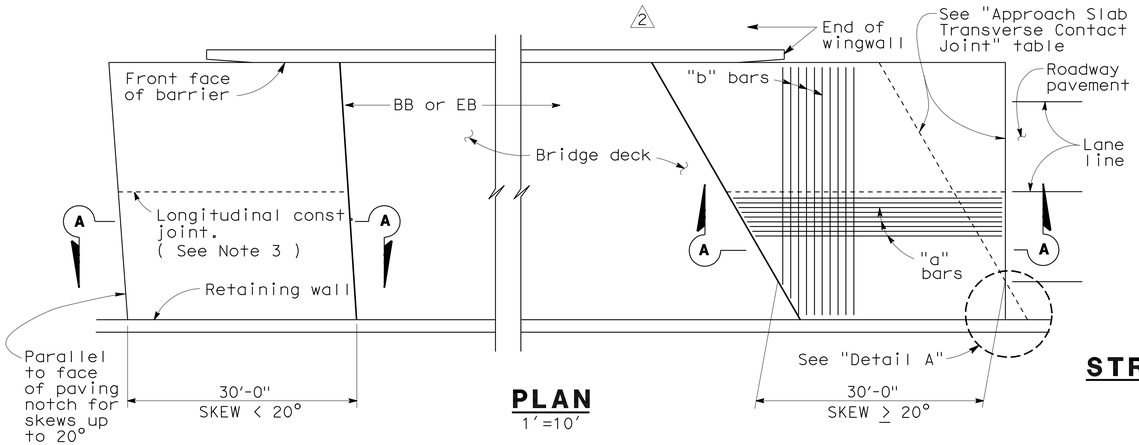

PLAN
1'=10'

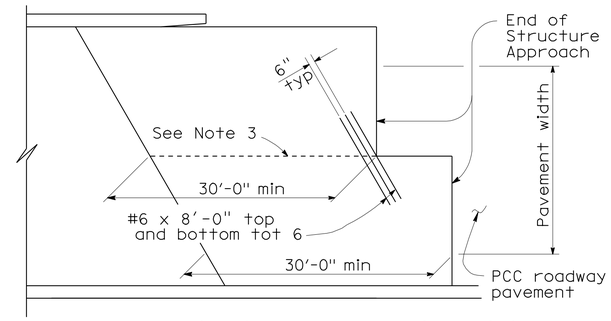

STRUCTURE APPROACH - END STAGGER DETAIL
No Scale

APPROACH SLAB TRANSVERSE CONTACT JOINT		
APPROACH SKEW	WITH AC ROADWAY PAVEMENT	WITH PCC ROADWAY PAVEMENT
< 20°	Parallel to face of paving notch	Parallel to face of paving notch
20°- 45°	Parallel to face of P N use (Detail A)	Stagger lines 24' to 36' apart
> 45°	Parallel to face of P N use (Detail A)	Stagger at each lane line

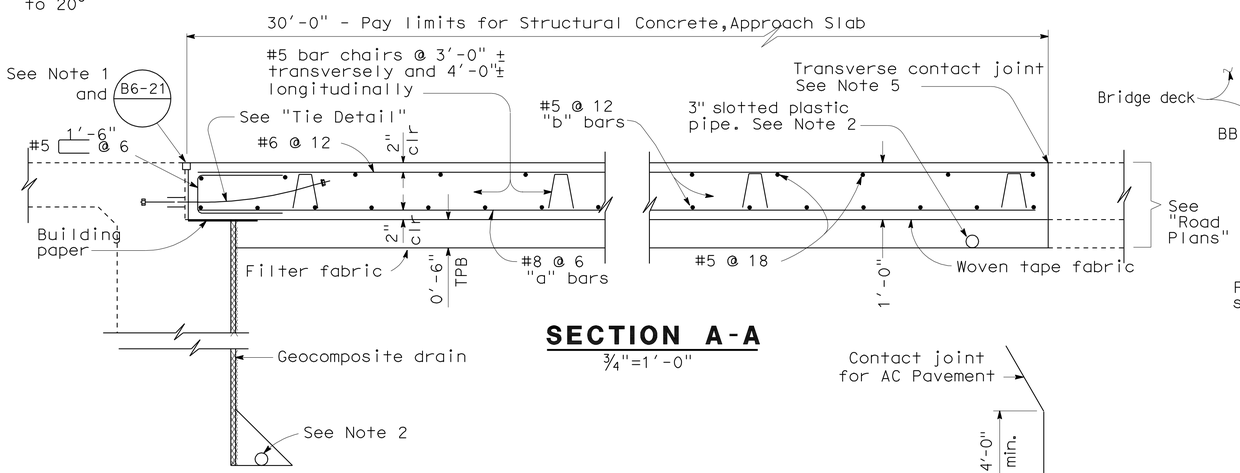

SECTION A-A
¾"=1'-0"

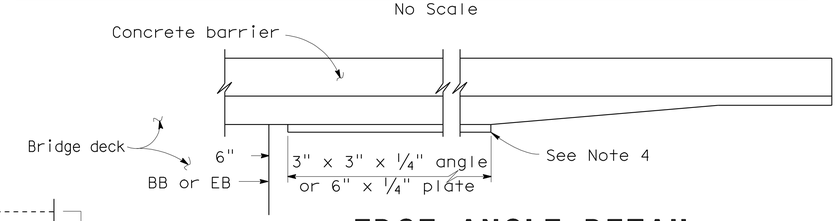

EDGE ANGLE DETAIL
½"=1'-0"

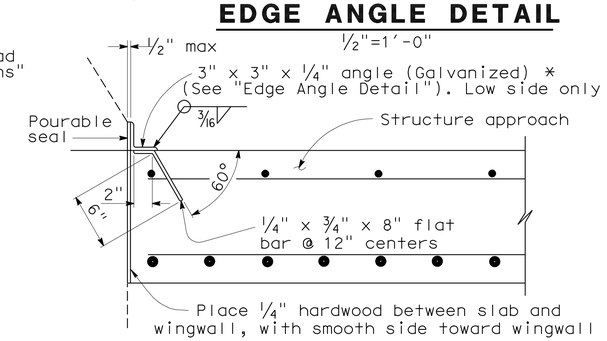

*(TO BE USED WITH TYPE 25 OR TYPE 27 CONCRETE BARRIER)

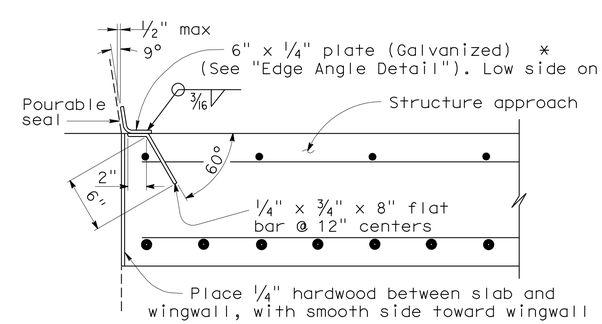

*(TO BE USED WITH TYPE 732 OR TYPE 736 CONCRETE BARRIER)

DETAIL B
1½"=1'-0"

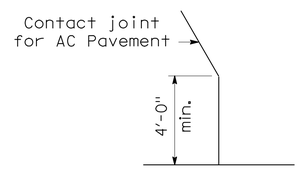

DETAIL A
No Scale

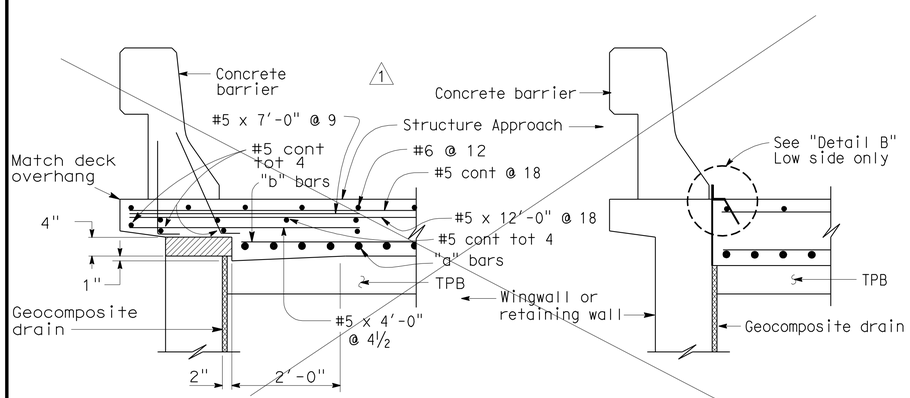

TYPE E-1 TYPE E-2

SECTION C-C
¾"=1'-0"

NOTE:
THE CONTRACTOR SHALL VERIFY ALL CONTROLLING FIELD DIMENSIONS BEFORE ORDERING OR FABRICATING ANY MATERIAL.

(Type E-1 to be used,unless otherwise shown on plans)

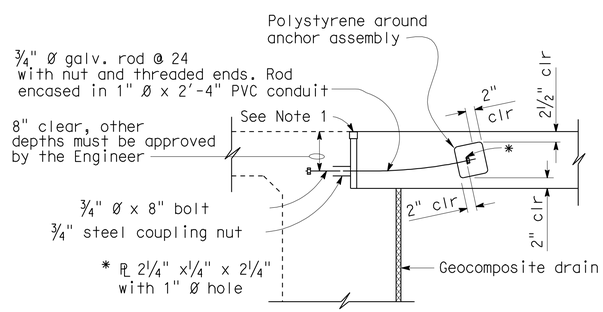

TIE DETAIL
¾"=1'-0"

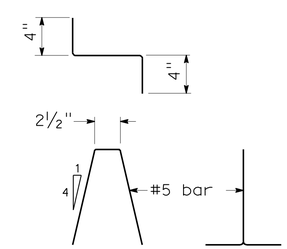

BAR CHAIR DETAIL
1½"=1'-0"

NOTES:

1. For details not noted or shown,see Structure Plans.
2. For drainage details,see "Structure Approach Drainage Details" sheet.
3. Longitudinal construction joints,when permitted by the Engineer,shall be located on lane lines.
4. End angle or plate at beginning of barrier transition, end of wingwall or end of structure approach, as applicable.
5. For transverse contact joint with new PCC paving, refer to Standard Plan P10.
6. At the contractor's option,approach slab transverse reinforcement may be placed parallel to paving notch. Spacing of transverse reinforcement is measured along ℄ roadway.

Polystyrene to be removed.

STANDARD DRAWING

FILE NO. xs3-180e

APPROVED BY M. Ha RESPONSIBLE TECHNICAL SPECIALIST
APPROVAL DATE 8-12-08

RELEASED BY O. Alcantara RESPONSIBLE OFFICE CHIEF
RELEASE DATE 8-12-08

1 Deleted Detail
2 Modified Detail

STATE OF CALIFORNIA DEPARTMENT OF TRANSPORTATION

DIVISION OF ENGINEERING SERVICES

BRIDGE NO. 57-0637
POST MILE 7.80

BONITA ROAD UNDERCROSSING (WIDEN)
STRUCTURE APPROACH TYPE N(30D)

DS OSD 2147A (ENGLISH STANDARD DRAWING "XS" BORDER REV. 01/11/08)

ORIGINAL SCALE IN INCHES FOR REDUCED PLANS 0 1 2 3

CU 3613
PN&Phase 11000200501

DISREGARD PRINTS BEARING EARLIER REVISION DATES

REVISION DATES (PRELIMINARY STAGE ONLY) 01-27-11 04-05-11

SHEET 11 OF 18

USERNAME => s124496

c_57-0637-s-sapptyp_n.dgn

DATE PLOTTED => 09-DEC-2011 TIME PLOTTED => 11:02

DIST	COUNTY	ROUTE	POST MILES TOTAL PROJECT	SHEET No.	TOTAL SHEETS
11	SD	54,805	1.8,5.5/9.4	565	635

Tony Skreslet 8-25-11
REGISTERED CIVIL ENGINEER DATE

12-5-11
PLANS APPROVAL DATE

REGISTERED PROFESSIONAL ENGINEER TONY SKRESLET No. C50676 Exp. 09-30-11 CIVIL STATE OF CALIFORNIA

The State of California or its officers or agents shall not be responsible for the accuracy or completeness of electronic copies of this plan sheet.

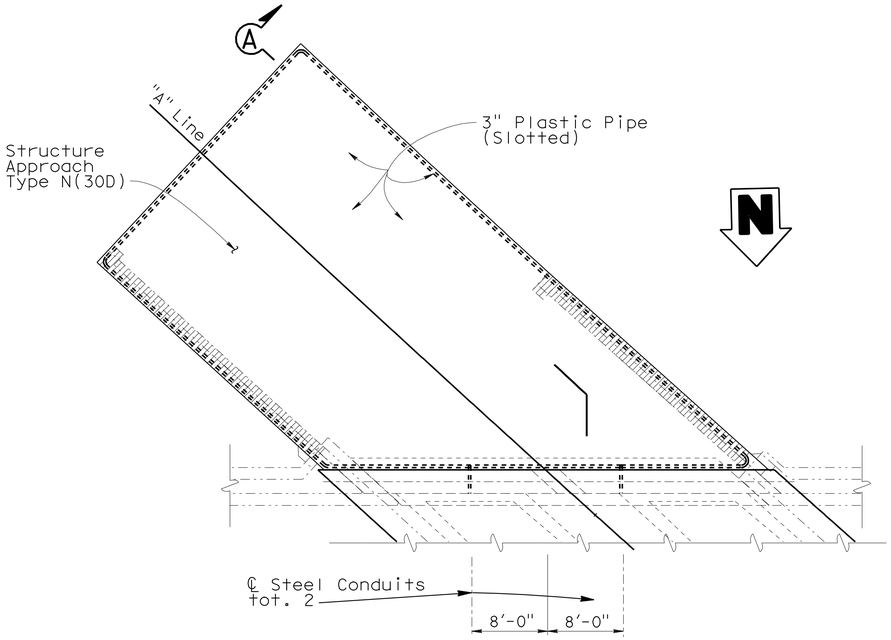

NOTE: Abutment 1 shown, Abutment 4 similar

PLAN
No Scale

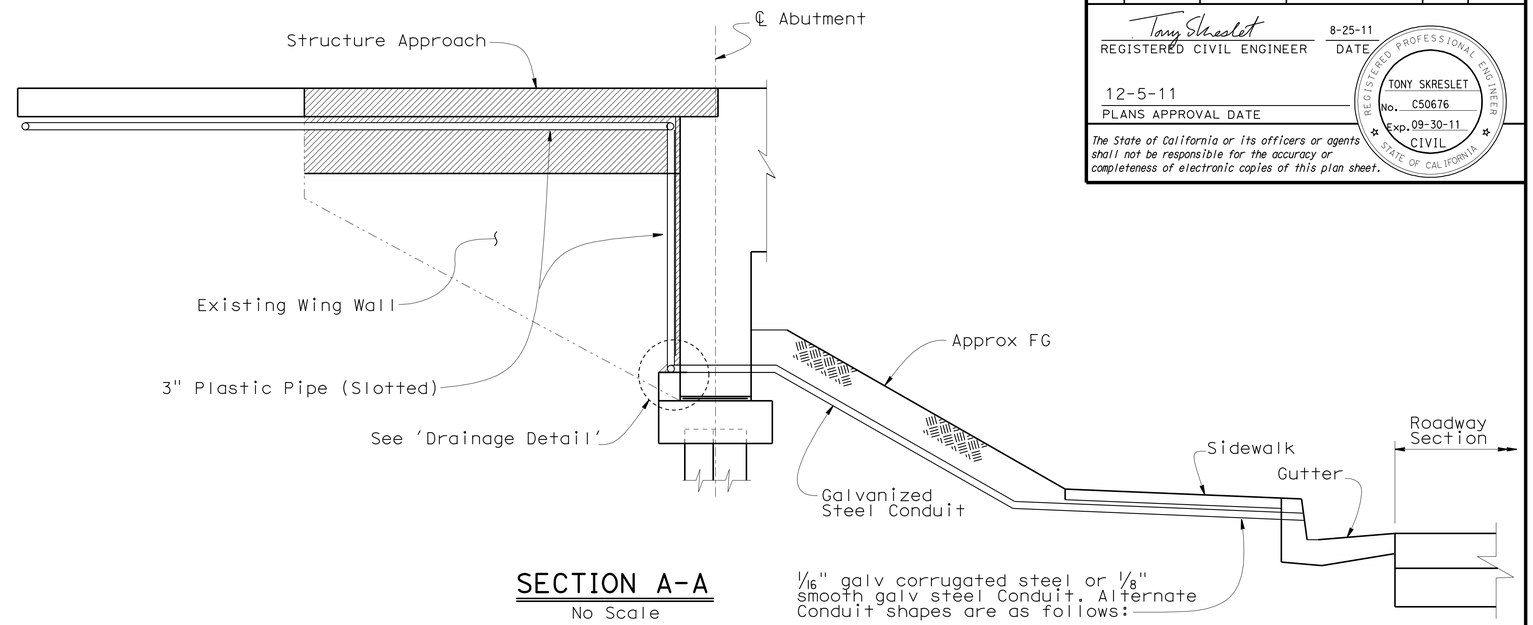

SECTION A-A
No Scale

1/16" galv corrugated steel or 1/8" smooth galv steel Conduit. Alternate Conduit shapes are as follows:

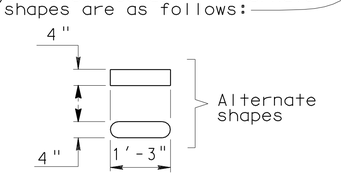

NOTE: Sidewalk and Gutter to be removed and replaced as directed by Engineer

LEGEND:

Indicates top 3' of Wing Wall and portion of Overhang to be removed

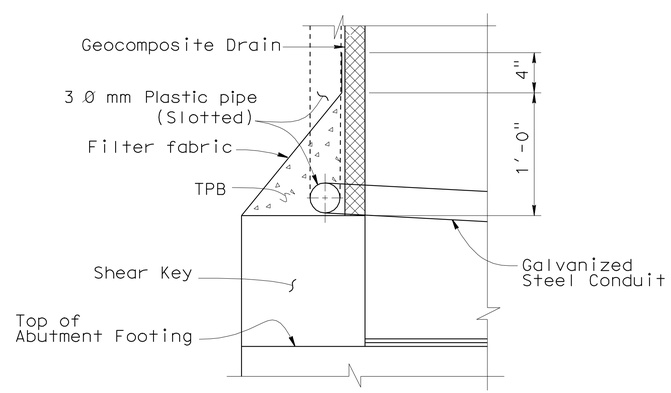

DRAINAGE DETAIL
No Scale

NOTE:
THE CONTRACTOR SHALL VERIFY ALL CONTROLLING FIELD DIMENSIONS BEFORE ORDERING OR FABRICATING ANY MATERIAL.

	BY	CHECKED
DESIGN	T. Skreslet	D. Dunrud
DETAILS	T. Nguyen	D. Dunrud
QUANTITIES	T. Skreslet	D. Dunrud

STATE OF CALIFORNIA DEPARTMENT OF TRANSPORTATION

DIVISION OF ENGINEERING SERVICES STRUCTURE DESIGN DESIGN BRANCH 14

BRIDGE NO. 57-0637
POST MILE 7.80

BONITA ROAD UNDERCROSSING (WIDEN)
STRUCTURE APPROACH DRAINAGE DETAILS

STRUCTURES DESIGN DETAIL SHEET (ENGLISH) (REV. 09-01-10)

ORIGINAL SCALE IN INCHES FOR REDUCED PLANS 0 1 2 3

UNIT: 3613
PROJECT NUMBER & PHASE: 11000200501 CONTRACT NO.: 11-2T1811

DISREGARD PRINTS BEARING EARLIER REVISION DATES

REVISION DATES: 07-22-11 08-01-11 08-09-11 08-12-11

SHEET 12 OF 18

FILE => c_57-0637-t-sadd.dgn

USERNAME => s124496 DATE PLOTTED => 09-DEC-2011 TIME PLOTTED => 11:02

DIST	COUNTY	ROUTE	POST MILES TOTAL PROJECT	SHEET No	TOTAL SHEETS
11	SD	54,805	1.8,5.5/9.4	566	635

REGISTERED CIVIL ENGINEER 8-1-11

12-5-11
PLANS APPROVAL DATE

The State of California or its officers or agents shall not be responsible for the accuracy or completeness of electronic copies of this plan sheet.

REGISTERED PROFESSIONAL ENGINEER David T-M Liao No. C59838 Exp. 12-31-11 CIVIL STATE OF CALIFORNIA

This LOTB sheet was prepared in accordance with the Caltrans Soil & Rock Logging, Classification, & Presentation Manual (June 2007).

BENCH MARK

WP 495+00, point on centerline of I-805 in median at station 495+00 on "A1" Line.
Elev: 66.61′
NAVD88 (Vertical)
NAD83 (Horizontal)

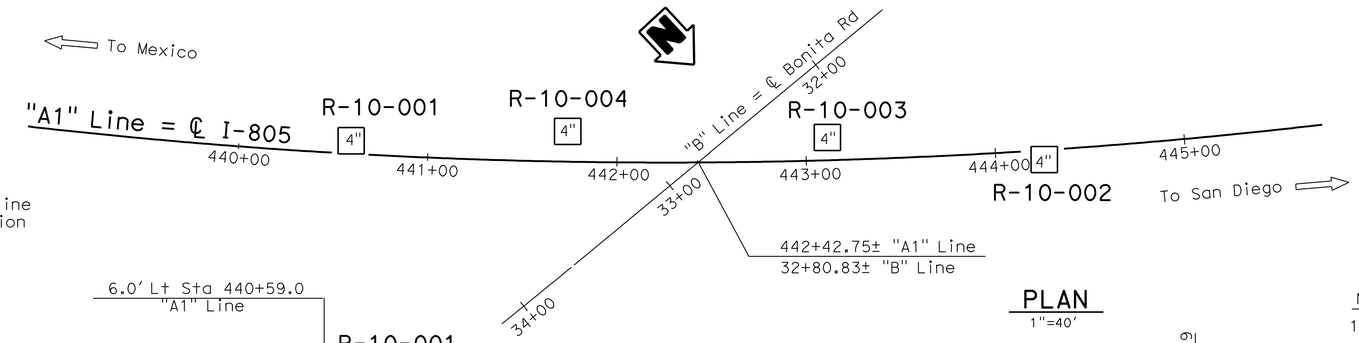

PLAN

1"=40′

Notes :

1. Ground water was encountered during the April 2010 field investigation in borings R-10-001 and R-10-002. No ground water elevation data was obtained from borings R-10-003 and R-10-004 due to those borings being located in active traffic lanes.
2. RQD designated with "N/A" (not applicable) indicates that the rock encountered within the drilled interval was not sound rock, therefore RQD was not calculated.

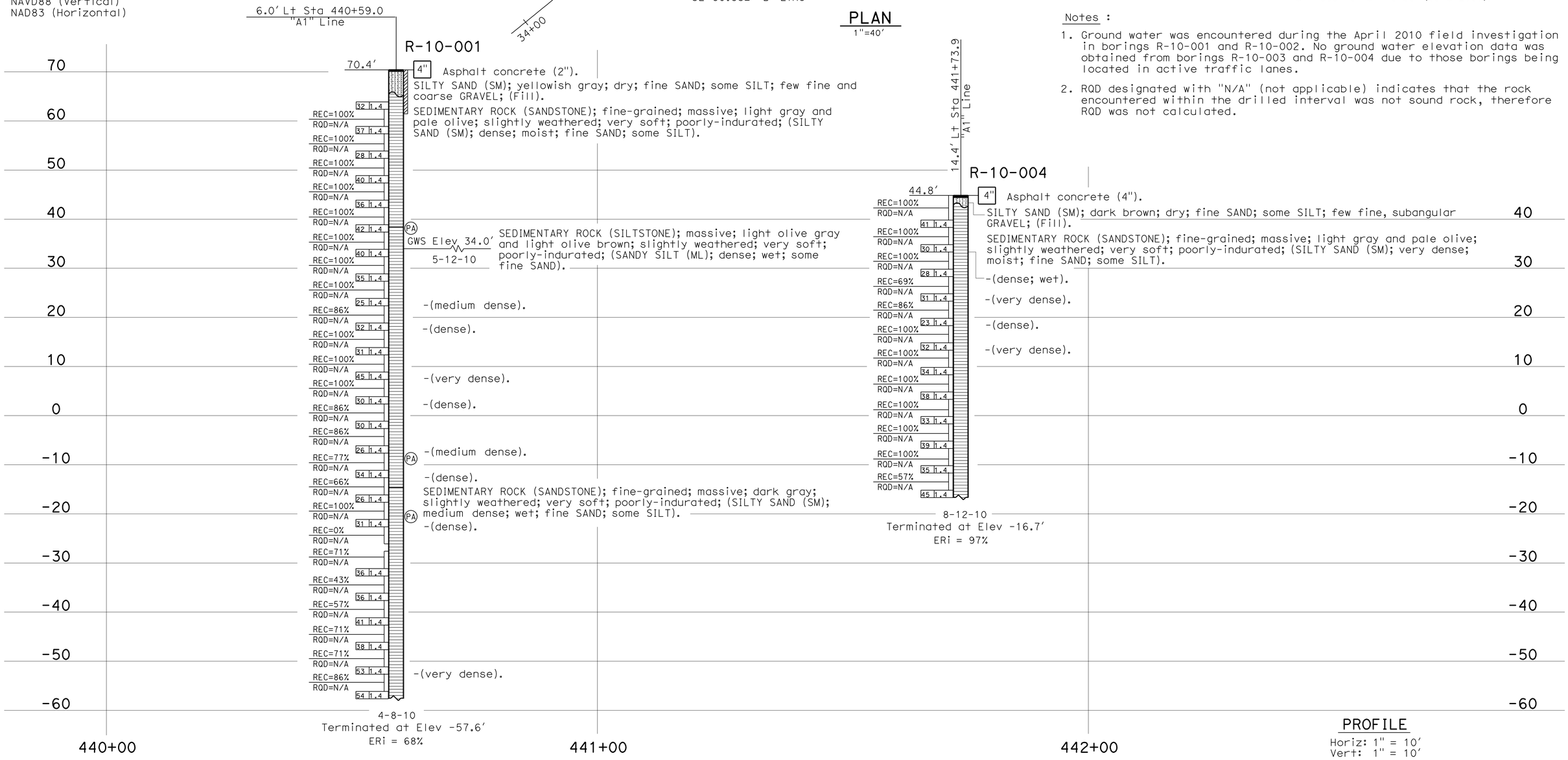

PROFILE

Horiz: 1" = 10′
Vert: 1" = 10′

ENGINEERING SERVICES	MATERIALS AND GEOTECHNICAL SERVICES	STATE OF CALIFORNIA DEPARTMENT OF TRANSPORTATION	DIVISION OF ENGINEERING SERVICES STRUCTURE DESIGN DESIGN BRANCH X	BRIDGE NO. 57-0637R/L POST MILE 7.80	BONITA ROAD UC (WIDEN) LOG OF TEST BORINGS 1 OF 6
FUNCTIONAL SUPERVISOR NAME: M. DeSalvatore	DRAWN BY: W. Tang 11/10 CHECKED BY: E. Neupert	FIELD INVESTIGATION BY: T-M Liao			

OGS CIVIL LOG OF TEST BORINGS SHEET

ORIGINAL SCALE IN INCHES FOR REDUCED PLANS 0 1 2 3

UNIT: 3643
PROJECT NUMBER & PHASE: 11000200501 CONTRACT NO.: 11-2T1811

DISREGARD PRINTS BEARING EARLIER REVISION DATES

REVISION DATES 03-10-11 04-21-11 06-03-11 07-08-11 SHEET 13 OF 18

FILE => c_57-0637-z-lotb_1of6.dgn

USERNAME => s124196 DATE PLOTTED => 09-DEC-2011 TIME PLOTTED => 11:02

DIST	COUNTY	ROUTE	POST MILES TOTAL PROJECT	SHEET No	TOTAL SHEETS
11	SD	54,805	1.8,5.5/9.4	567	635

REGISTERED CIVIL ENGINEER 8-1-11

12-5-11
PLANS APPROVAL DATE

The State of California or its officers or agents shall not be responsible for the accuracy or completeness of electronic copies of this plan sheet.

REGISTERED PROFESSIONAL ENGINEER David T-M Liao No. C59838 Exp. 12-31-11 CIVIL STATE OF CALIFORNIA

This LOTB sheet was prepared in accordance with the Caltrans Soil & Rock Logging, Classification, & Presentation Manual (June 2007).

FOR PLAN VIEW, SEE
"LOG OF TEST BORINGS 1 OF 7"

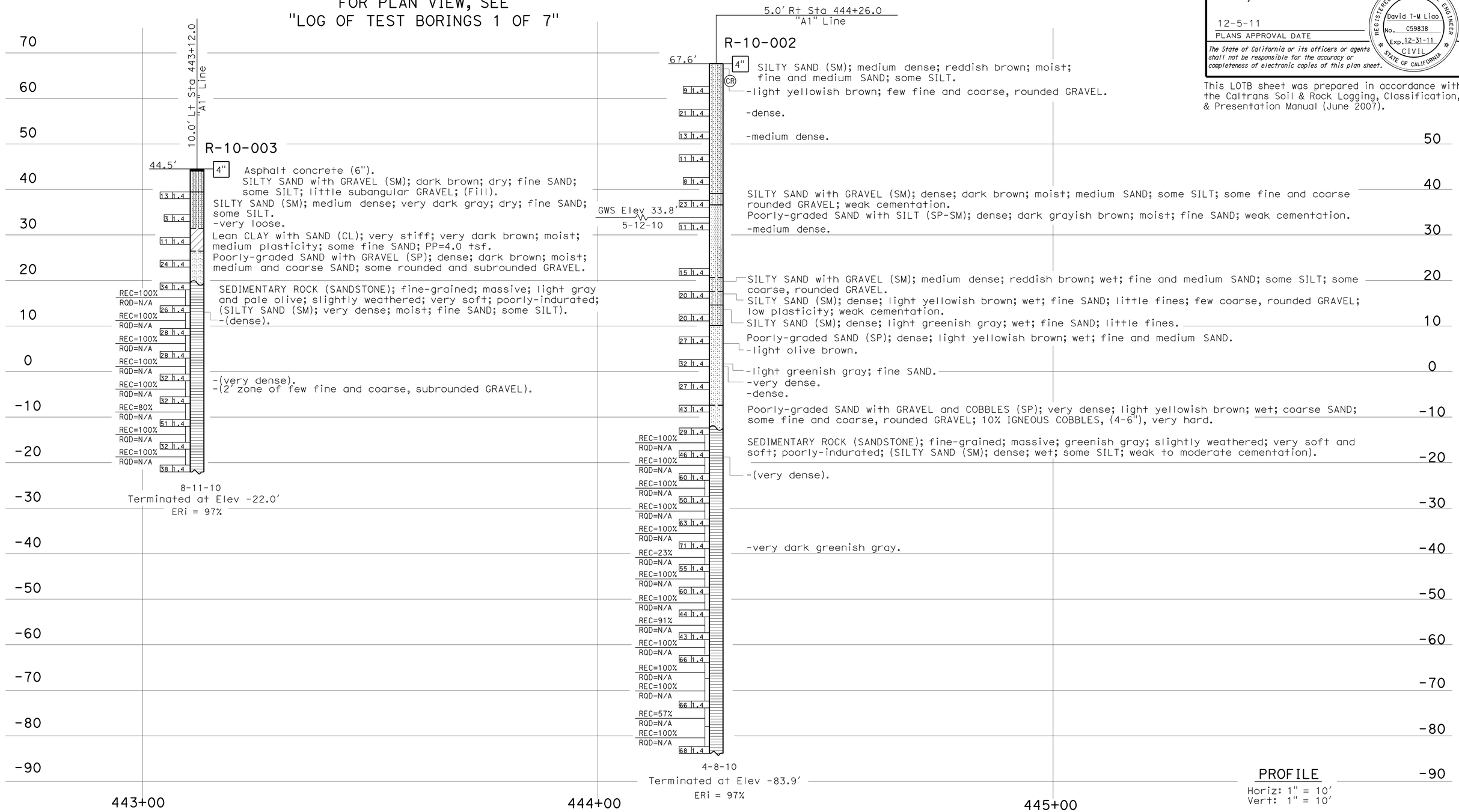

PROFILE
Horiz: 1" = 10'
Vert: 1" = 10'

ENGINEERING SERVICES	MATERIALS AND GEOTECHNICAL SERVICES	STATE OF CALIFORNIA DEPARTMENT OF TRANSPORTATION	DIVISION OF ENGINEERING SERVICES STRUCTURE DESIGN DESIGN BRANCH X	BRIDGE NO. 57-0637R/L POST MILE 7.80	BONITA ROAD UC (WIDEN) LOG OF TEST BORINGS 2 OF 6
FUNCTIONAL SUPERVISOR NAME: M. DeSalvatore	DRAWN BY: W. Tang 11/10 CHECKED BY: E. Neupert	FIELD INVESTIGATION BY: T-M Liao / J. Klamecki			

OGS CIVIL LOG OF TEST BORINGS SHEET

ORIGINAL SCALE IN INCHES FOR REDUCED PLANS 0 1 2 3

UNIT: 3643
PROJECT NUMBER & PHASE: 11000200501 CONTRACT NO.: 11-2T1811

DISREGARD PRINTS BEARING EARLIER REVISION DATES

REVISION DATES 06-03-11 07-08-11 07-15-11 07-20-11

SHEET 14 OF 18

FILE => c_57-0637-z-lotb_2of6.dgn

USERNAME => s124496 DATE PLOTTED => 09-DEC-2011 TIME PLOTTED => 11:02

DIST	COUNTY	ROUTE	POST MILES TOTAL PROJECT	SHEET No	TOTAL SHEETS
11	SD	54,805	1.8,5.5/9.4	568	635

REGISTERED CIVIL ENGINEER 8-1-11

12-5-11
PLANS APPROVAL DATE

The State of California or its officers or agents shall not be responsible for the accuracy or completeness of electronic copies of this plan sheet.

REGISTERED PROFESSIONAL ENGINEER
David T-M Liao
No. C59838
Exp. 12-31-11
CIVIL
STATE OF CALIFORNIA

REFERENCE: CALTRANS SOIL & ROCK LOGGING, CLASSIFICATION, AND PRESENTATION MANUAL (JUNE 2007)

CEMENTATION

Description	Criteria
Weak	Crumbles or breaks with handling or little finger pressure.
Moderate	Crumbles or breaks with considerable finger pressure.
Strong	Will not crumble or break with finger pressure.

CONSISTENCY OF COHESIVE SOILS

Description	Unconfined Compressive Strength (tsf)	Pocket Penetrometer Measurement (tsf)	Torvane Measurement (tsf)	Field Approximation
Very Soft	< 0.25	< 0.25	< 0.12	Easily penetrated several inches by fist
Soft	0.25 to 0.50	0.25 to 0.50	0.12 to 0.25	Easily penetrated several inches by thumb
Medium Stiff	0.50 to 1.0	0.50 to 1.0	0.25 to 0.50	Penetrated several inches by thumb with moderate effort
Stiff	1 to 2	1 to 2	0.50 to 1.0	Readily indented by thumb but penetrated only with great effort
Very Stiff	2 to 4	2 to 4	1.0 to 2.0	Readily indented by thumbnail
Hard	> 4.0	> 4.0	> 2.0	Indented by thumbnail with difficulty

BOREHOLE IDENTIFICATION

Symbol	Hole Type	Description
Size	A	Auger Boring
Size	R P	Rotary drilled boring Rotary percussion boring (air)
Size	R	Rotary drilled diamond core
Size	HD HA	Hand driven (1-inch soil tube) Hand Auger
●	D	Dynamic Cone Penetration Boring
▲	CPT	Cone Penetration Test (ASTM D 5778-95)
⬚	O	Other

Note: Size in inches.

PLASTICITY OF FINE-GRAINED SOILS

Description	Criteria
Nonplastic	A 1/8-inch thread cannot be rolled at any water content.
Low	The thread can barely be rolled and the lump cannot be formed when drier than the plastic limit.
Medium	The thread is easy to roll and not much time is required to reach the plastic limit. The thread cannot be rerolled after reaching the plastic limit. The lump crumbles when drier than the plastic limit.
High	It takes considerable time rolling and kneading to reach the plastic limit. The thread can be rerolled several times after reaching the plastic limit. The lump can be formed without crumbling when drier than the plastic limit.

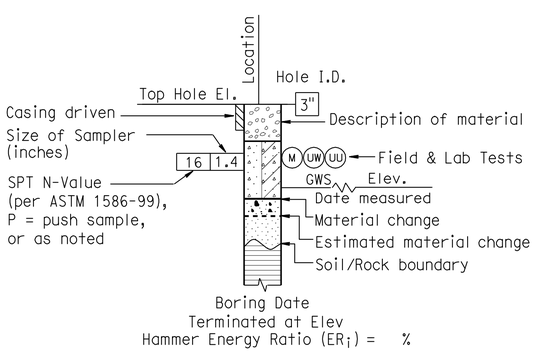

ROTARY BORING

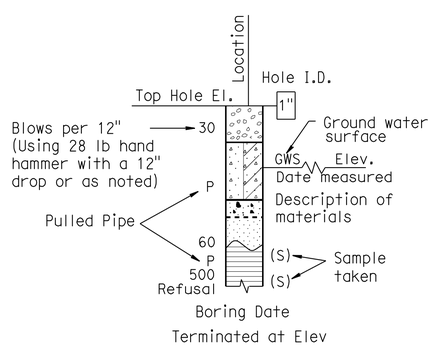

HAND BORING

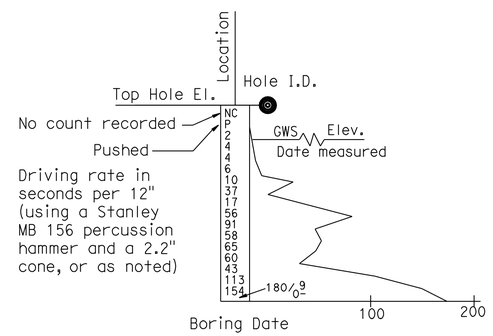

DYNAMIC CONE PENETRATION BORING

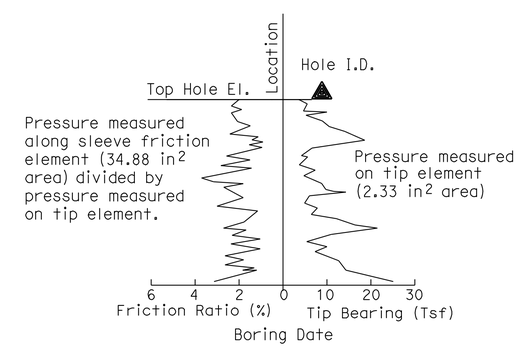

CONE PENETRATION TEST (CPT) SOUNDING

ENGINEERING SERVICES	MATERIALS AND GEOTECHNICAL SERVICES	STATE OF CALIFORNIA DEPARTMENT OF TRANSPORTATION	DIVISION OF ENGINEERING SERVICES STRUCTURE DESIGN DESIGN BRANCH X	BRIDGE NO. 57-0637R/L POST MILE 7.80	BONITA ROAD UC (WIDEN) LOG OF TEST BORINGS 3 OF 6
	PREPARED BY: W. Tang 11/10				

GS LOTB SOIL LEGEND

ORIGINAL SCALE IN INCHES FOR REDUCED PLANS 0 1 2 3

UNIT: 3643
PROJECT NUMBER & PHASE: 11000200501 CONTRACT NO.: 11-2T1811

DISREGARD PRINTS BEARING EARLIER REVISION DATES

REVISION DATES | SHEET 15 OF 18

FILE => c_57-0637-z-lotb_3of6.dgn

USERNAME => s1244496 DATE PLOTTED => 09-DEC-2011 TIME PLOTTED => 11:02

REFERENCE: CALTRANS SOIL & ROCK LOGGING, CLASSIFICATION, AND PRESENTATION MANUAL (JUNE 2007)

DIST	COUNTY	ROUTE	POST MILES TOTAL PROJECT	SHEET No	TOTAL SHEETS
11	SD	54,805	1.8,5.5/9.4	569	635

REGISTERED CIVIL ENGINEER 8-1-11

12-5-11
PLANS APPROVAL DATE

REGISTERED PROFESSIONAL ENGINEER David T-M Liao No. C59838 Exp. 12-31-11 CIVIL STATE OF CALIFORNIA

The State of California or its officers or agents shall not be responsible for the accuracy or completeness of electronic copies of this plan sheet.

GROUP SYMBOLS AND NAMES

Graphic/Symbol	Group Names	Graphic/Symbol	Group Names
GW	Well-graded GRAVEL Well-graded GRAVEL with SAND	CL	Lean CLAY Lean CLAY with SAND Lean CLAY with GRAVEL SANDY lean CLAY SANDY lean CLAY with GRAVEL GRAVELLY lean CLAY GRAVELLY lean CLAY with SAND
GP	Poorly graded GRAVEL Poorly graded GRAVEL with SAND		
GW-GM	Well-graded GRAVEL with SILT Well-graded GRAVEL with SILT and SAND	CL-ML	SILTY CLAY SILTY CLAY with SAND SILTY CLAY with GRAVEL SANDY SILTY CLAY SANDY SILTY CLAY with GRAVEL GRAVELLY SILTY CLAY GRAVELLY SILTY CLAY with SAND
GW-GC	Well-graded GRAVEL with CLAY (or SILTY CLAY) Well-graded GRAVEL with CLAY and SAND (or SILTY CLAY and SAND)		
GP-GM	Poorly graded GRAVEL with SILT Poorly graded GRAVEL with SILT and SAND	ML	SILT SILT with SAND SILT with GRAVEL SANDY SILT SANDY SILT with GRAVEL GRAVELLY SILT GRAVELLY SILT with SAND
GP-GC	Poorly graded GRAVEL with CLAY (or SILTY CLAY) Poorly graded GRAVEL with CLAY and SAND (or SILTY CLAY and SAND)		
GM	SILTY GRAVEL SILTY GRAVEL with SAND	OL	ORGANIC lean CLAY ORGANIC lean CLAY with SAND ORGANIC lean CLAY with GRAVEL SANDY ORGANIC lean CLAY SANDY ORGANIC lean CLAY with GRAVEL GRAVELLY ORGANIC lean CLAY GRAVELLY ORGANIC lean CLAY with SAND
GC	CLAYEY GRAVEL CLAYEY GRAVEL with SAND		
GC-GM	SILTY, CLAYEY GRAVEL SILTY, CLAYEY GRAVEL with SAND	OL	ORGANIC SILT ORGANIC SILT with SAND ORGANIC SILT with GRAVEL SANDY ORGANIC SILT SANDY ORGANIC SILT with GRAVEL GRAVELLY ORGANIC SILT GRAVELLY ORGANIC SILT with SAND
SW	Well-graded SAND Well-graded SAND with GRAVEL		
SP	Poorly graded SAND Poorly graded SAND with GRAVEL	CH	Fat CLAY Fat CLAY with SAND Fat CLAY with GRAVEL SANDY fat CLAY SANDY fat CLAY with GRAVEL GRAVELLY fat CLAY GRAVELLY fat CLAY with SAND
SW-SM	Well-graded SAND with SILT Well-graded SAND with SILT and GRAVEL		
SW-SC	Well-graded SAND with CLAY (or SILTY CLAY) Well-graded SAND with CLAY and GRAVEL (or SILTY CLAY and GRAVEL)	MH	Elastic SILT Elastic SILT with SAND Elastic SILT with GRAVEL SANDY elastic SILT SANDY elastic SILT with GRAVEL GRAVELLY elastic SILT GRAVELLY elastic SILT with SAND
SP-SM	Poorly graded SAND with SILT Poorly graded SAND with SILT and GRAVEL		
SP-SC	Poorly graded SAND with CLAY (or SILTY CLAY) Poorly graded SAND with CLAY and GRAVEL (or SILTY CLAY and GRAVEL)	OH	ORGANIC fat CLAY ORGANIC fat CLAY with SAND ORGANIC fat CLAY with GRAVEL SANDY ORGANIC fat CLAY SANDY ORGANIC fat CLAY with GRAVEL GRAVELLY ORGANIC fat CLAY GRAVELLY ORGANIC fat CLAY with SAND
SM	SILTY SAND SILTY SAND with GRAVEL		
SC	CLAYEY SAND CLAYEY SAND with GRAVEL	OH	ORGANIC elastic SILT ORGANIC elastic SILT with SAND ORGANIC elastic SILT with GRAVEL SANDY ORGANIC elastic SILT SANDY ORGANIC elastic SILT with GRAVEL GRAVELLY ORGANIC elastic SILT GRAVELLY ORGANIC elastic SILT with SAND
SC-SM	SILTY, CLAYEY SAND SILTY, CLAYEY SAND with GRAVEL		
PT	PEAT	OL/OH	ORGANIC SOIL ORGANIC SOIL with SAND ORGANIC SOIL with GRAVEL SANDY ORGANIC SOIL SANDY ORGANIC SOIL with GRAVEL GRAVELLY ORGANIC SOIL GRAVELLY ORGANIC SOIL with SAND
	COBBLES COBBLES and BOULDERS BOULDERS		

FIELD AND LABORATORY TESTING

- (C) Consolidation (ASTM D 2435)
- (CL) Collapse Potential (ASTM D 5333)
- (CP) Compaction Curve (CTM 216)
- (CR) Corrosivity Testing (CTM 643, CTM 422, CTM 417)
- (CU) Consolidated Undrained Triaxial (ASTM D 4767)
- (DS) Direct Shear (ASTM D 3080)
- (EI) Expansion Index (ASTM D 4829)
- (M) Moisture Content (ASTM D 2216)
- (OC) Organic Content-% (ASTM D 2974)
- (P) Permeability (CTM 220)
- (PA) Particle Size Analysis (ASTM D 422)
- (PI) Plasticity Index (AASHTO T 90) Liquid Limit (AASHTO T 89)
- (PL) Point Load Index (ASTM D 5731)
- (PM) Pressure Meter
- (PP) Pocket Penetrometer
- (R) R-Value (CTM 301)
- (SE) Sand Equivalent (CTM 217)
- (SG) Specific Gravity (AASHTO T 100)
- (SL) Shrinkage Limit (ASTM D 427)
- (SW) Swell Potential (ASTM D 4546)
- (TV) Pocket Torvane
- (UC) Unconfined Compression-Soil (ASTM D 2166) Unconfined Compression-Rock (ASTM D 2938)
- (UU) Unconsolidated Undrained Triaxial (ASTM D 2850)
- (UW) Unit Weight (ASTM D 4767)
- (VS) Vane Shear (AASHTO T 223)

APPARENT DENSITY OF COHESIONLESS SOILS

Description	SPT N_{60} (Blows / 12 inches)
Very loose	0 - 4
Loose	5 - 10
Medium Dense	11 - 30
Dense	31 - 50
Very Dense	> 50

MOISTURE

Description	Criteria
Dry	Absence of moisture, dusty, dry to the touch
Moist	Damp but no visible water
Wet	Visible free water, usually soil is below water table

PERCENT OR PROPORTION OF SOILS

Description	Criteria
Trace	Particles are present but estimated to be less than 5%
Few	5 to 10%
Little	15 to 25%
Some	30 to 45%
Mostly	50 to 100%

PARTICLE SIZE

Description		Size
Boulder		> 12"
Cobble		3" to 12"
Gravel	Coarse	3/4" to 3"
	Fine	No. 4 to 3/4"
Sand	Coarse	No. 10 to No. 4
	Medium	No. 40 to No. 10
	Fine	No. 200 to No. 40

ENGINEERING SERVICES

MATERIALS AND GEOTECHNICAL SERVICES

PREPARED BY: W. Tang 11/10

STATE OF CALIFORNIA DEPARTMENT OF TRANSPORTATION

DIVISION OF ENGINEERING SERVICES STRUCTURE DESIGN

DESIGN BRANCH X

BRIDGE NO. 57-0637R/L

POST MILE 7.80

BONITA ROAD UC (WIDEN)

LOG OF TEST BORINGS 4 OF 6

GS LOTB SOIL LEGEND

ORIGINAL SCALE IN INCHES FOR REDUCED PLANS 0 1 2 3

UNIT: 3643
PROJECT NUMBER & PHASE: 11000200501
CONTRACT NO.: 11-2T1811

DISREGARD PRINTS BEARING EARLIER REVISION DATES

REVISION DATES

SHEET 16 OF 18

FILE => c_57-0637-z-lotb_4of6.dgn

USERNAME => s124496 DATE PLOTTED => 09-DEC-2011 TIME PLOTTED => 11:02

DIST	COUNTY	ROUTE	POST MILES TOTAL PROJECT	SHEET No	TOTAL SHEETS
11	SD	54,805	1.8,5.5/9.4	570	635

REGISTERED CIVIL ENGINEER 8-1-11

12-5-11
PLANS APPROVAL DATE

The State of California or its officers or agents shall not be responsible for the accuracy or completeness of electronic copies of this plan sheet.

REGISTERED PROFESSIONAL ENGINEER David T-M Liao No. C59838 Exp. 12-31-11 CIVIL STATE OF CALIFORNIA

REFERENCE: CALTRANS SOIL & ROCK LOGGING, CLASSIFICATION, AND PRESENTATION MANUAL (JUNE 2007)

PERCENT CORE RECOVERY (REC) & ROCK QUALITY DESIGNATION (RQD)

$$REC = \frac{\sum \text{Length of the recovered core pieces (inches)}}{\text{Total length of core run (inches)}} \times 100\%$$

$$RQD = \frac{\sum \text{Length of intact core pieces} \geq 4''}{\text{Total length of core run (inches)}} \times 100\%$$

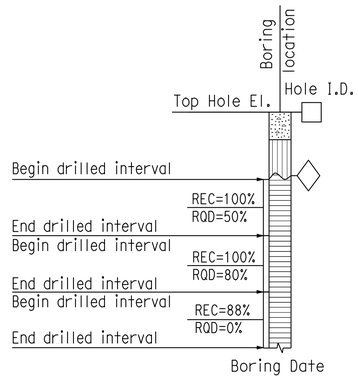

RELATIVE STRENGTH OF INTACT ROCK

Term	Uniaxial Compressive Strength (PSI)
Extremely Strong	> 30,000
Very Strong	14,500 - 30,000
Strong	7,000 - 14,500
Medium Strong	3,500 - 7,000
Weak	700 - 3,500
Very Weak	150 - 700
Extremely Weak	< 150

BEDDING SPACING

Description	Thickness / Spacing
Massive	Greater than 10 ft
Very thickly bedded	3 to 10 ft
Thickly bedded	1 to 3 ft
Moderately bedded	3-5/8" to 1 ft
Thinly bedded	1-1/4" to 3-5/8"
Very thinly bedded	3/8" to 1-1/4"
Laminated	Less than 3/8"

LEGEND OF ROCK MATERIALS

- IGNEOUS ROCK
- SEDIMENTARY ROCK
- METAMORPHIC ROCK

ROCK HARDNESS

Description	Criteria
Extremely Hard	Specimen cannot be scratched with a pocket knife or sharp pick; can only be chipped with repeated heavy hammer blows.
Very Hard	Specimen cannot be scratched with a pocket knife or sharp pick. Breaks with repeated heavy hammer blows.
Hard	Specimen can be scratched with a pocket knife or sharp pick with difficulty (heavy pressure). Heavy hammer blows required to break specimen.
Moderately Hard	Specimen can be scratched with pocket knife or sharp pick with light or moderate pressure. Core breaks with moderate hammer blows.
Moderately Soft	Specimen can be grooved 1/6" deep with a pocket knife or sharp pick with moderate or heavy pressure. Breaks with light hammer blow or heavy manual pressure.
Soft	Specimen can be grooved or gouged easily by a pocket knife or sharp pick with light pressure, can be scratched with fingernail. Breaks with light to moderate manual pressure.
Very Soft	Specimen can be readily indented, grooved or gouged with fingernail, or carved with a pocket knife. Breaks with light manual pressure.

FRACTURE DENSITY

Description	Observed Fracture Density
Unfractured	No fractures.
Very slightly fractured	Lengths greater than 3 feet.
Slightly fractured	Lengths from 1 to 3 feet with few lengths less than 1 foot or greater than 3 feet.
Moderately fractured	Lengths mostly in 4" to 1 foot range with most lengths about 8"
Intensely fractured	Lengths average from 1 to 4" with scattered fragmented intervals with lengths less than 4"
Very intensely fractured	Mostly chips and fragments with a few scattered short core lengths.

Combination descriptors (such as "Very intensely to intensely fractured") are used where equal distribution of both fracture density characteristics is present over a significant interval or exposure, or where characteristics are "in between" the descriptor definitions. Only two adjacent descriptors may be combined.

WEATHERING DESCRIPTORS FOR INTACT ROCK

Description	Diagnostic features					General Characteristics
	Chemical Weathering-Discoloration and/or oxidation		Mechanical Weathering-Grain boundary conditions (disaggregation) primarily for granitics and some coarse-grained sediments	Texture and Solutioning		
	Body of Rock	Fracture Surfaces		Texture	Solutioning	
Fresh	No discoloration, not oxidized.	No discoloration or oxidation.	No separation, intact (tight).	No change.	No solutioning.	Hammer rings when crystalline rocks are struck.
Slightly Weathered	Discoloration or oxidation is limited to surface of, or short distance from, fractures; some feldspar crystals are dull.	Minor to complete discoloration or oxidation of most surfaces.	No visible separation, intact (tight).	Preserved.	Minor leaching of some soluble minerals may be noted.	Hammer rings when crystalline rocks are struck. Body of rock not weakened.
Moderately Weathered	Discoloration or oxidation extends from fractures usually throughout; Fe-Mg minerals are "rusty," feldspar crystals are "cloudy."	All fracture surfaces are discolored or oxidized.	Partial separation of boundaries visible.	Generally preserved.	Soluble minerals may be mostly leached.	Hammer does not ring when rock is struck. Body of rock is slightly weakened.
Intensely Weathered	Discoloration or oxidation throughout; all feldspars and Fe-Mg minerals are altered to clay to some extent; or chemical alteration produces in-situ disaggregation, see grain boundary conditions.	All fracture surfaces are discolored or oxidized, surfaces friable.	Partial separation, rock is friable; in semiarid conditions granitics are disaggregated.	Texture altered by chemical disintegration (hydration, argillation).	Leaching of soluble minerals may be complete.	Dull sound when struck with hammer, usually can be broken with moderate to heavy manual pressure or by light hammer blow without reference to planes of weakness such as incipient or hairline fractures, or veinlets. Rock is significantly weakened.
Decomposed	Discolored or oxidized throughout, but resistant minerals such as quartz may be unaltered; all feldspars and Fe-Mg minerals are completely altered to clay.		Complete separation of grain boundaries (disaggregated).	Resembles a soil, partial or complete remnant rock structure may be preserved; leaching of soluble minerals usually complete.		Can be granulated by hand. Resistant minerals such as quartz may be present as "stringers" or "dikes."

Combination descriptors (such as "slightly weathered to fresh") are permissible where equal distribution of both weathering characteristics is present over significant intervals or where characteristics present are "in between" the diagnostic feature. However, combination descriptors should not be used where significant, identifiable zones can be delineated. Only two adjacent descriptors may be combined. "Very intensely weathered" is the combination descriptor for "intensely weathered to decomposed."

ENGINEERING SERVICES

MATERIALS AND GEOTECHNICAL SERVICES

PREPARED BY: W. Tang 11/10

STATE OF CALIFORNIA DEPARTMENT OF TRANSPORTATION

DIVISION OF ENGINEERING SERVICES STRUCTURE DESIGN

DESIGN BRANCH X

BRIDGE NO. 57-0637R/L

POST MILE 7.80

BONITA ROAD UC (WIDEN)

LOG OF TEST BORINGS 5 OF 6

GS LOTB SOIL LEGEND

ORIGINAL SCALE IN INCHES FOR REDUCED PLANS 0 1 2 3

UNIT: 3643
PROJECT NUMBER & PHASE: 11000200501
CONTRACT NO.: 11-2T1811

DISREGARD PRINTS BEARING EARLIER REVISION DATES

REVISION DATES

SHEET 17 OF 18

FILE => c_57-0637-z-lotb_5of6.dgn

USERNAME => s124496 DATE PLOTTED => 09-DEC-2011 TIME PLOTTED => 11:02

FED. ROAD DIST. NO.	STATE	F.A. PROJECT NO.	SHEET NO.	TOTAL SHEETS
7	CALIF.			

DIST.	COUNTY	ROUTE	SECTION	PHASE	TOTAL SHEETS
11	SD	805	8/18.8	2/2	285

A. L. Lee
REGISTERED CIVIL ENGINEER
DATE APPROVED April 23, 1973

BENCH MARK

B.M. BL 006 Elev. 39.90
CDH Bronze Disc in 2" IP 289.86' Rt.
Sta 428 + 72.86 POC "A".

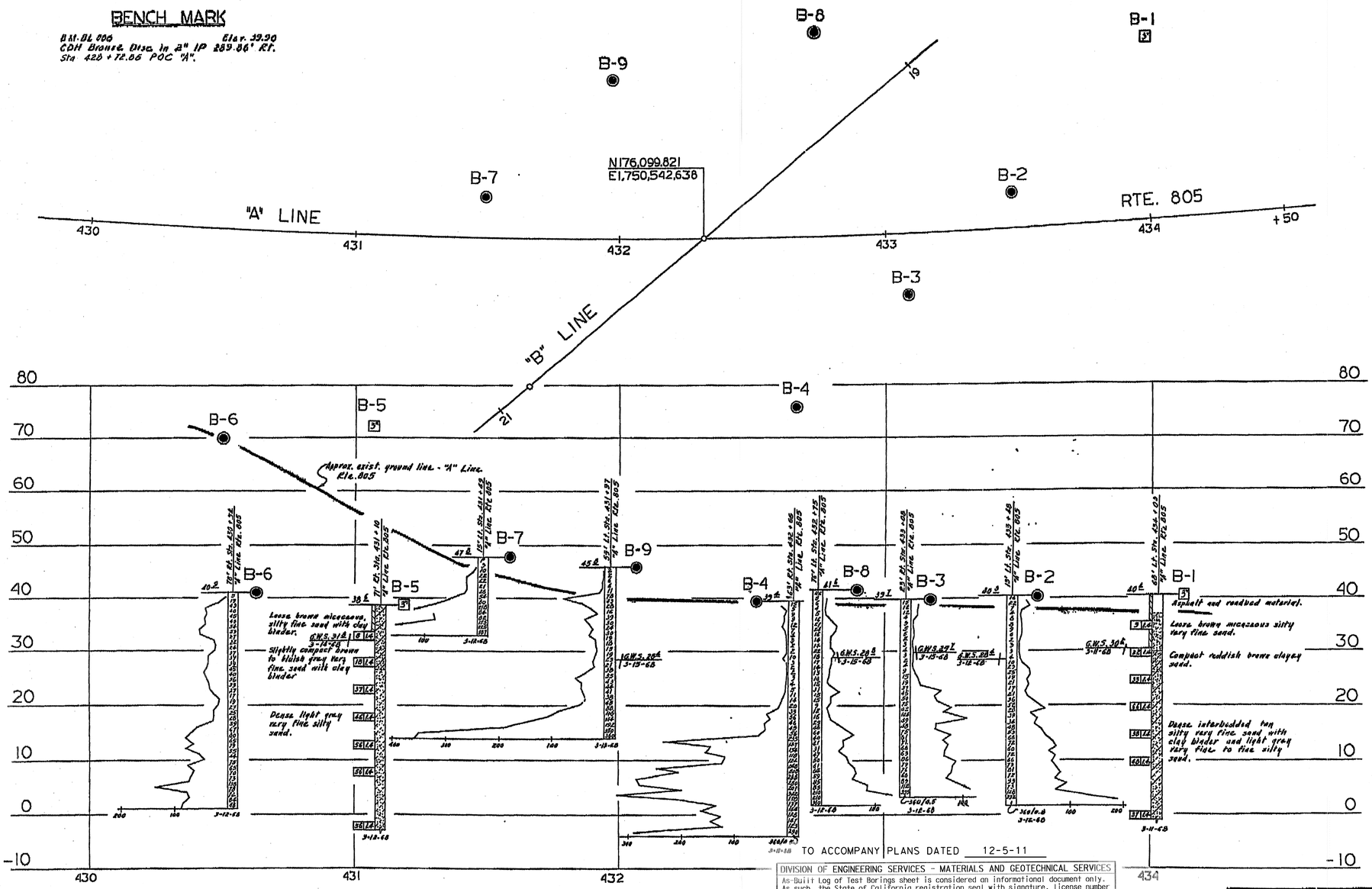

PLAN

Scale: 1" = 20'

PROFILE

Scale: Vert. 1" = 10'
Horiz. 1" = 20'

AS BUILT NO CHANGES
CORRECTIONS by R.D. McKenzie
CONTRACT NO. 11-110114
DATE 8-20-75
CMW 11/4/75

TO ACCOMPANY PLANS DATED 12-5-11

DIVISION OF ENGINEERING SERVICES - MATERIALS AND GEOTECHNICAL SERVICES

As-Built Log of Test Borings sheet is considered an informational document only. As such, the State of California registration seal with signature, license number and registration certificate expiration date confirm that this is a true and accurate copy of the original document. It does not attest to the accuracy or validity of the information contained in the original document. This drawing is available and presented only for the convenience of any bidder, contractor or other interested party.

DIST.	COUNTY	ROUTE	POST MILE-TOTAL PROJECT	Sheet No.	Total Sheets
11	SD	54,805	1.8,5.5/9.4	571	635

REGISTERED CIVIL ENGINEER — DATE 7-14-11

BONITA ROAD UC (WIDEN)
LOG OF TEST BORINGS 6 OF 6

UNIT: 3643	CONTRACT No.	BRIDGE No.
PROJECT NUMBER & PHASE: 11000200501	11-2T1811	57-0637R/L
	Sheet	of
	18	18

NOTE: A COPY OF THIS LOG OF TEST BORINGS IS AVAILABLE AT OFFICE OF STRUCTURE MAINTENANCE AND INVESTIGATIONS, SACRAMENTO, CALIFORNIA

REGISTERED PROFESSIONAL ENGINEER
David T-M Liao
No. C59838
Exp. 12-31-11
CIVIL
STATE OF CALIFORNIA

SHEET	OF
12	12

STATE OF CALIFORNIA

BONITA ROAD UNDERCROSSING

LOG OF TEST BORINGS

SCALE As Noted | BRIDGE # 57-637R/L | FILE | DRAWING 57-637-8

MKL DRAWING No. PR- 1/6

LEGEND OF BORING OPERATIONS

Penetrometer
2½" Core Penetrometer
Sampler Boring (Dry)
Rotary Boring (Wet)
Auger Boring (Dry)
Jet Spring
Core Boring
Test Pit

Penetration Resist.
Rotary Boring
1" Soil Tube

LEGEND OF EARTH MATERIALS

Gravel
Sand
Silt
Clay
Silty Clay or Clayey Silt
Peat and Organic Matter
Fill Material
Igneous Rock
Sandy Clay or Clayey Sand
Sandy Silt or Silty Sand
Sedimentary Rock
Metamorphic Rock

CLASSIFICATION OF MATERIAL BASED ON STANDARD GRADE SIZE LIMITS

Diagram showing the basis for estimates of grade and distribution used in determining the classification of soils.
If gravel is present or appreciable, indicate the term "gravelly" may be added to the class name, viz., "gravelly silt", "gravelly clay", "coarse", "medium" and "fine" which need to describe sands, are defined under Reference to standard grade size limits.

NOTE: Classification of earth material as shown on this sheet is based upon field inspection and is not to be construed to imply mechanical analysis.

FIELD STUDY by D. Wilkes 3-13-68
DRAWN by J. Law 3-20-68
CHECKED by R. Cooper 3-20-68
Approved Recommended: Chief, Bridge Geology
Reference Engineer

BRIDGE DEPARTMENT
ENGINEERING GEOLOGY SECTION

AS BUILT PLANS
Contract No. 11-110114
Date Completed —
Document No. 40006298

I HEREBY CERTIFY THAT THIS IS A TRUE AND ACCURATE COPY OF THE ABOVE DOCUMENT TAKEN UNDER MY DIRECTION AND CONTROL ON THIS DATE IN SACRAMENTO, CALIFORNIA PURSUANT TO AUTHORIZATION BY THE DIRECTOR OF TRANSPORTATION.

FILENAME => c_57-0637-z_lotb_6of6.tif

DIST	COUNTY	ROUTE	POST MILES TOTAL PROJECT	SHEET No.	TOTAL SHEETS
11	SD	54,805	1.8,5.5/9.4	572	635

Tony Skreslet 8-25-11
REGISTERED CIVIL ENGINEER DATE

12-5-11
PLANS APPROVAL DATE

REGISTERED PROFESSIONAL ENGINEER TONY SKRESLET No. C50676 Exp. 09-30-11 CIVIL STATE OF CALIFORNIA

The State of California or its officers or agents shall not be responsible for the accuracy or completeness of electronic copies of this plan sheet.

INDEX TO PLANS

SHEET NO.	TITLE
1	GENERAL PLAN
2	MISCELLANEOUS DETAILS NO. 1
3	MISCELLANEOUS DETAILS NO. 2
4	MISCELLANEOUS DETAILS NO. 3

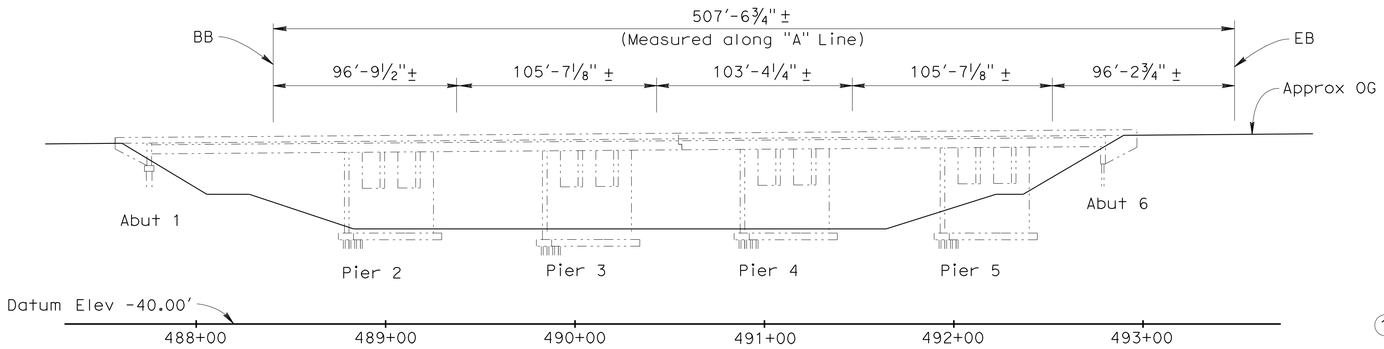

ELEVATION
1" = 40'

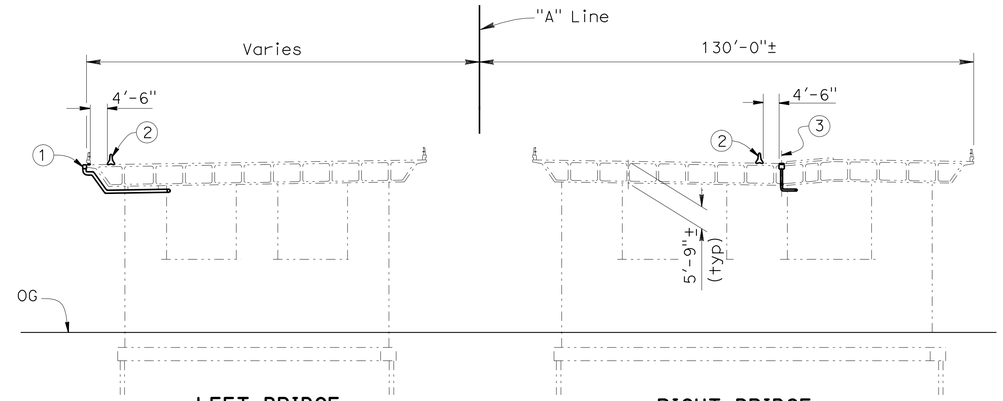

TYPICAL SECTION
1" = 20'

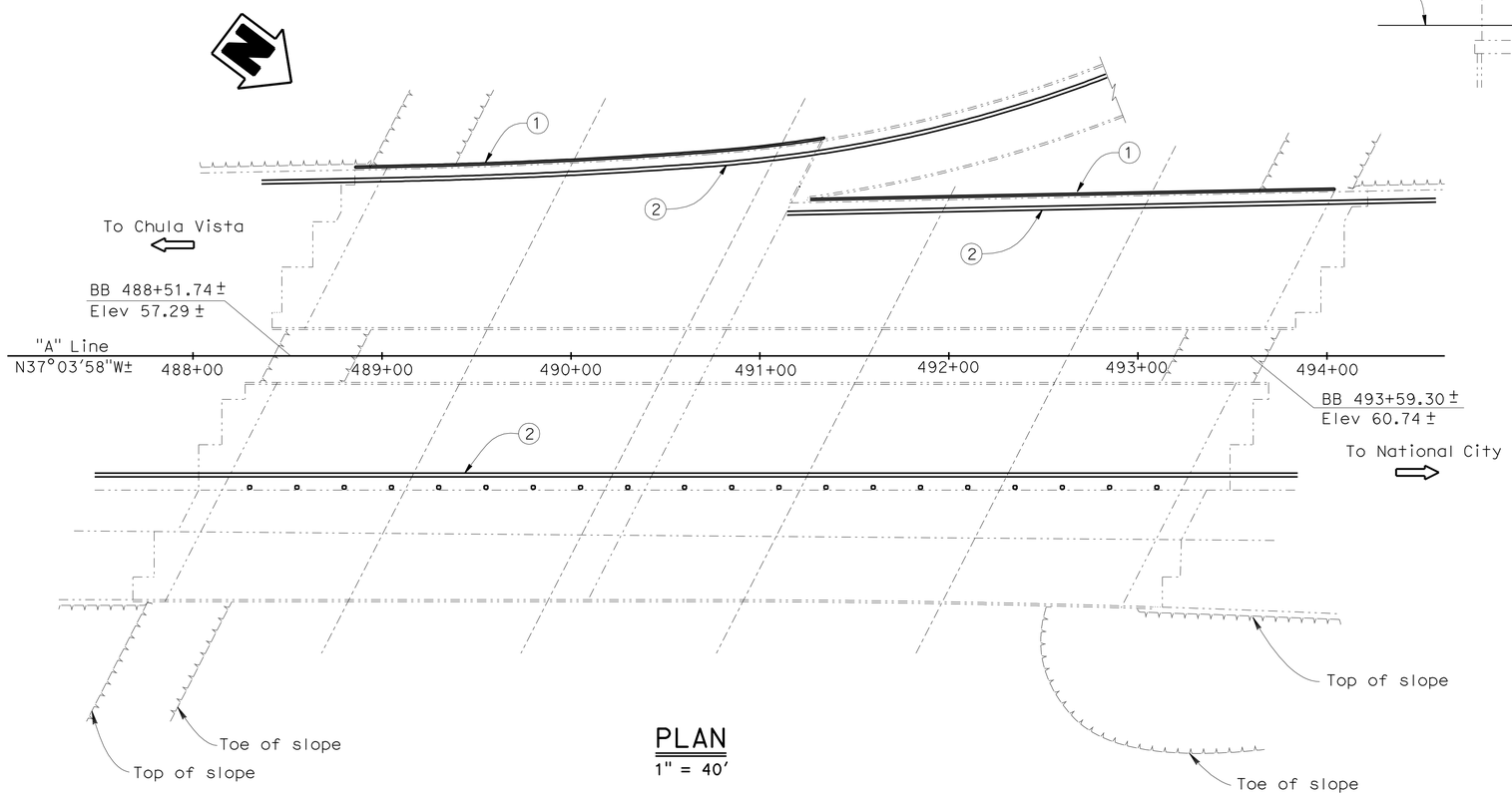

PLAN
1" = 40'

NOTE:
THE CONTRACTOR SHALL VERIFY ALL CONTROLLING FIELD DIMENSIONS BEFORE ORDERING OR FABRICATING ANY MATERIAL.

GENERAL NOTES
LOAD AND RESISTANCE FACTOR DESIGN

DESIGN: AASHTO LRFD BRIDGE DESIGN SPECIFICATIONS (4rd edition 2007 and California Amendments December 2008 and September 2010).

REINFORCED CONCRETE: f_y = 60 Ksi
f'_c = 3.6 Ksi

STRUCTURAL STEEL: f_y = ASTM A709 Grade 50

QUANTITIES

BRIDGE REMOVAL (PORTION), LOCATION D	LUMP SUM
BRIDGE DECK DRAINAGE SYSTEM	26,305 LB

NOTES:

1. Galvanized Steel Edge Drain with 10" ø Steel Pipe
2. Temporary Railing (Type K), see 'Road Plans'
3. Deck Drain Type D-1 Modified, total 20

LEGEND:

Indicates Existing Structure

Indicates Deck Drain Type D-1 Modified

Douglas J. Wancal
DESIGN ENGINEER

	BY	CHECKED
DESIGN	T. Skreslet	P. Peterson
DETAILS	C. Paclibar	P. Peterson
QUANTITIES	T. Skreslet	P. Peterson

LOAD & RESISTANCE FACTOR DESIGN — LIVE LOADING: HL93 W/"LOW-BOY"; PERMIT DESIGN VEHICLE

	BY	CHECKED
LAYOUT	T. Skreslet	P. Peterson
SPECIFICATIONS	R. Franti	PLANS AND SPECS COMPARED X

STATE OF CALIFORNIA
DEPARTMENT OF TRANSPORTATION

DIVISION OF ENGINEERING SERVICES
STRUCTURE DESIGN
DESIGN BRANCH 14

BRIDGE NO. 57-0638R/L
POST MILE 8.67

SWEETWATER RIVER BRIDGE
GENERAL PLAN

ORIGINAL SCALE IN INCHES FOR REDUCED PLANS 0 1 2 3

UNIT: 3613
PROJECT NUMBER & PHASE: 11000200501
CONTRACT NO.: 11-2T1811

DISREGARD PRINTS BEARING EARLIER REVISION DATES

REVISION DATES: 10-05-11 10-20-11 8-25-11 09-25-11

SHEET 1 OF 4

USERNAME => s124496 DATE PLOTTED => 09-DEC-2011 TIME PLOTTED => 12:15

STRUCTURES DESIGN GENERAL PLAN SHEET (ENGLISH) (REV.09-01-10)

FILE => d_57-0638rl-a-gp.dgn

DIST	COUNTY	ROUTE	POST MILES TOTAL PROJECT	SHEET No.	TOTAL SHEETS
11	SD	54,805	1.8,5.5/9.4	573	635

Tony Skreslet 8-25-11
REGISTERED CIVIL ENGINEER DATE

12-5-11
PLANS APPROVAL DATE

REGISTERED PROFESSIONAL ENGINEER TONY SKRESLET No. C50676 Exp. 09-30-11 CIVIL STATE OF CALIFORNIA

The State of California or its officers or agents shall not be responsible for the accuracy or completeness of electronic copies of this plan sheet.

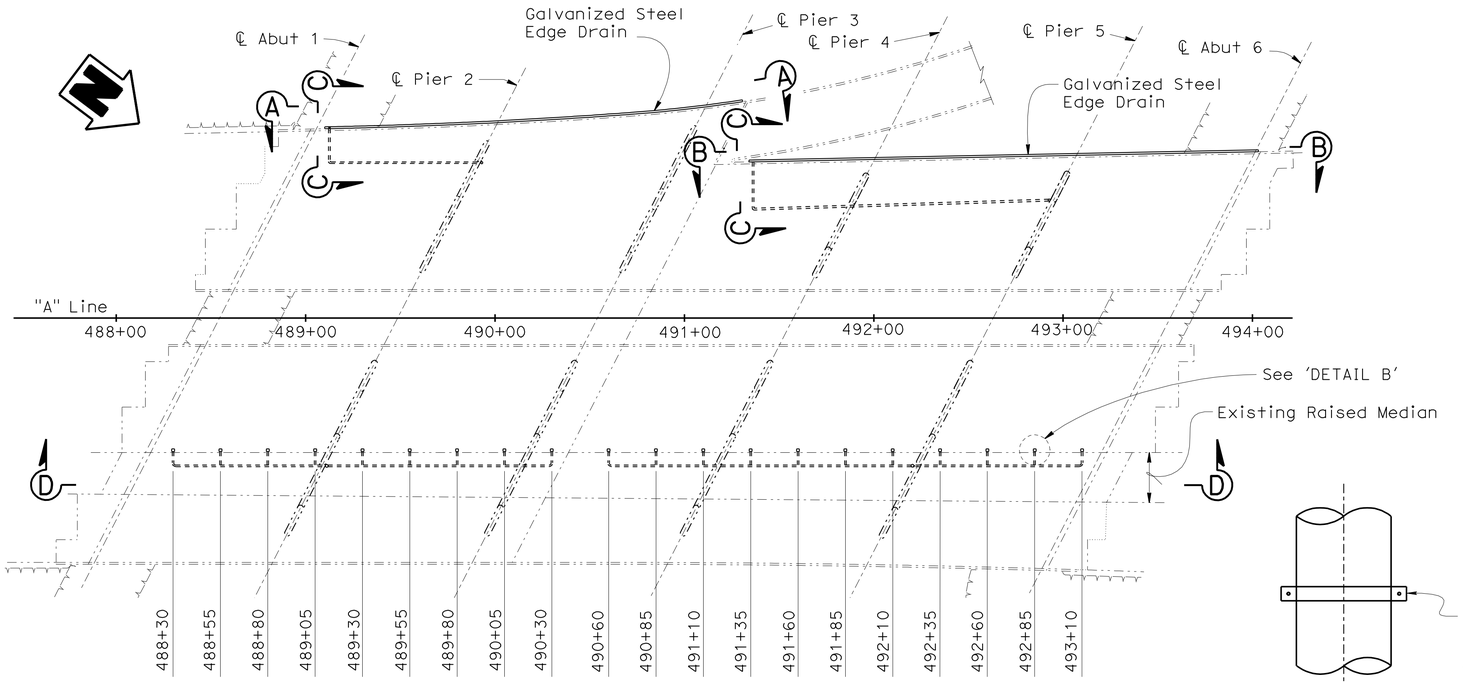

PLAN
1" = 40'

NOTES:

1. All metal to be hot dipped galvanized after fabricating
2. For 'SECTION 'C-C', see " MISCELLANEOUS DETAILS NO.2" sheet
3. For 'DETAIL B' and 'SECTION D-D', see " MISCELLANEOUS DETAILS NO.3" sheet

LEGEND:

- Indicates Existing Structure
- ⊟ Indicates Deck Drain Type D1 Modified, Tot 20. For location, see 'PLAN'

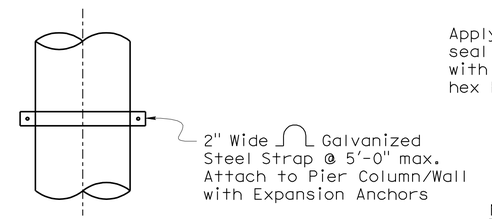

DETAIL A
1½" = 1'-0"

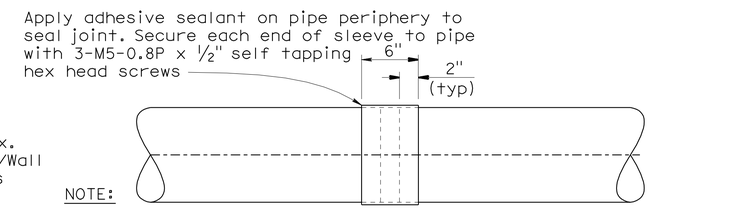

NOTE:
Sleeve inside diameter no greater than pipe outside diamenter

PIPE SLEEVE CONNECTION
No Scale

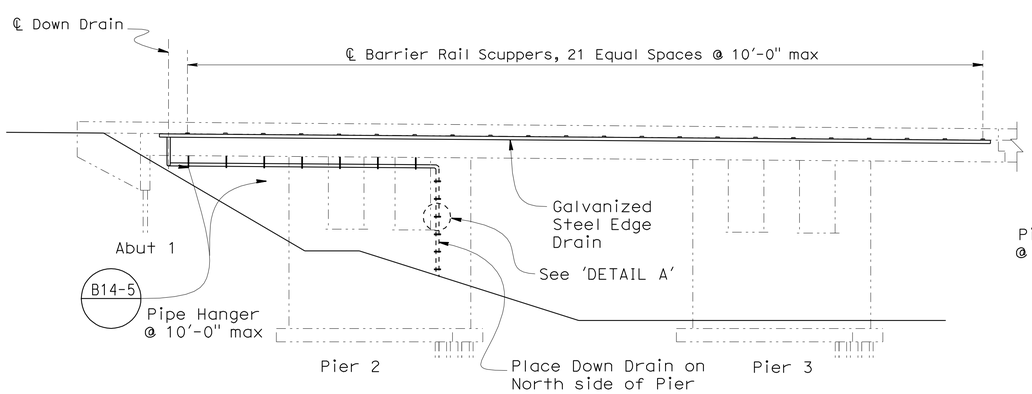

MIRRORED VIEW A-A
1" = 20'

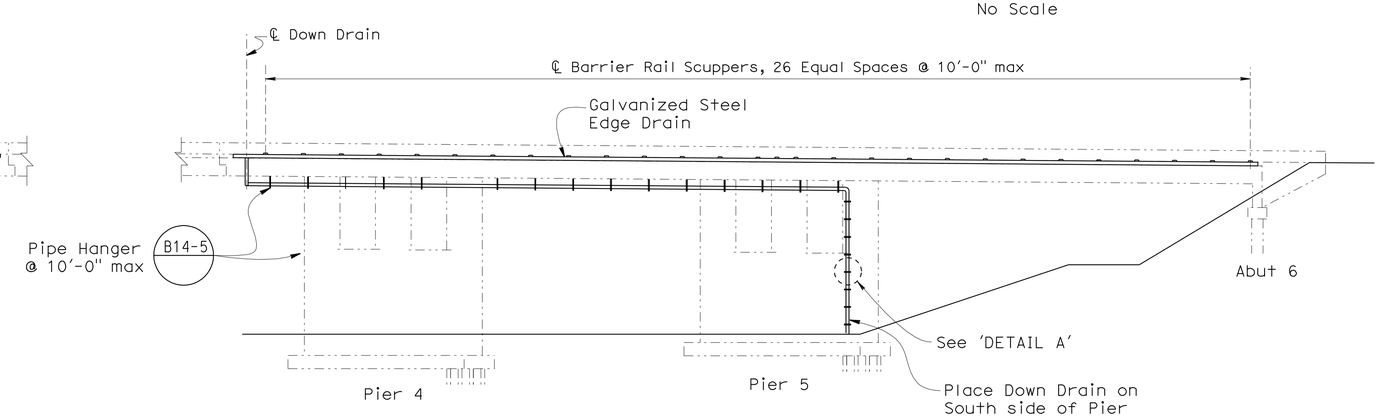

MIRRORED VIEW B-B
1" = 20'

NOTE:
THE CONTRACTOR SHALL VERIFY ALL CONTROLLING FIELD DIMENSIONS BEFORE ORDERING OR FABRICATING ANY MATERIAL.

	BY	CHECKED
DESIGN	T. Skreslet	P. Peterson
DETAILS	K. Kubo / W. Zhang	P. Peterson
QUANTITIES	T. Skreslet	P. Peterson

STATE OF CALIFORNIA
DEPARTMENT OF TRANSPORTATION

DIVISION OF ENGINEERING SERVICES
STRUCTURE DESIGN
DESIGN BRANCH 14

BRIDGE NO. 57-0638R/L
POST MILE 8.67

SWEETWATER RIVER BRIDGE
MISCELLANEOUS DETAILS NO. 1

STRUCTURES DESIGN DETAIL SHEET (ENGLISH) (REV. 09-01-10)

ORIGINAL SCALE IN INCHES FOR REDUCED PLANS 0 1 2 3

UNIT: 3613
PROJECT NUMBER & PHASE: 11000200501
CONTRACT NO.: 11-2T1811

DISREGARD PRINTS BEARING EARLIER REVISION DATES

REVISION DATES 10-13-11 10-20-11 10-21-11 10-24-11

SHEET 2 OF 4

FILE => d_57-0638rl-1-miscdetno1.dgn

USERNAME => s124496 DATE PLOTTED => 09-DEC-2011 TIME PLOTTED => 12:15

DIST	COUNTY	ROUTE	POST MILES TOTAL PROJECT	SHEET No.	TOTAL SHEETS
11	SD	54,805	1.8,5.5/9.4	574	635

Tony Skreslet 8-25-11
REGISTERED CIVIL ENGINEER DATE

12-5-11
PLANS APPROVAL DATE

REGISTERED PROFESSIONAL ENGINEER TONY SKRESLET No. C50676 Exp. 09-30-11 CIVIL STATE OF CALIFORNIA

The State of California or its officers or agents shall not be responsible for the accuracy or completeness of electronic copies of this plan sheet.

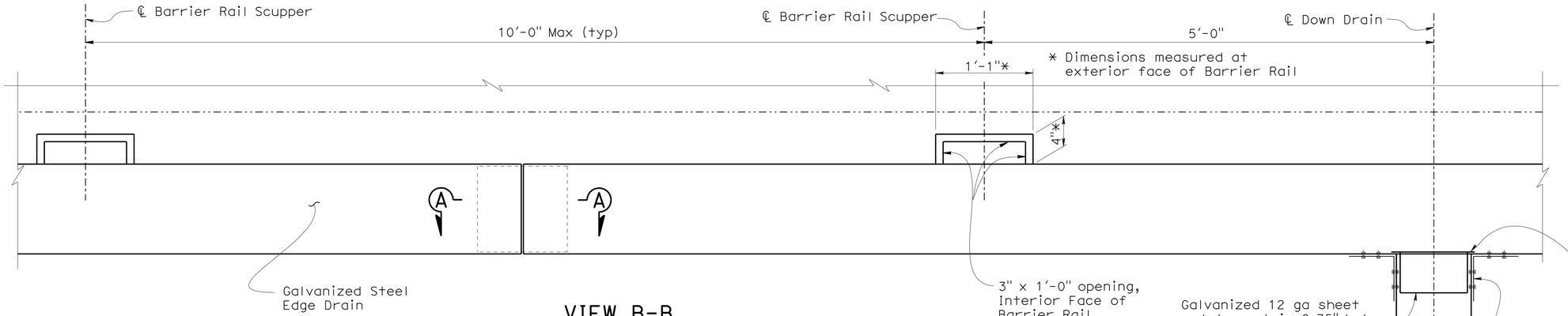

VIEW B-B

1½" = 1'-0"

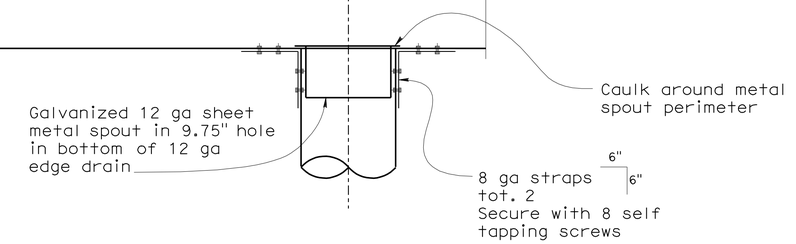

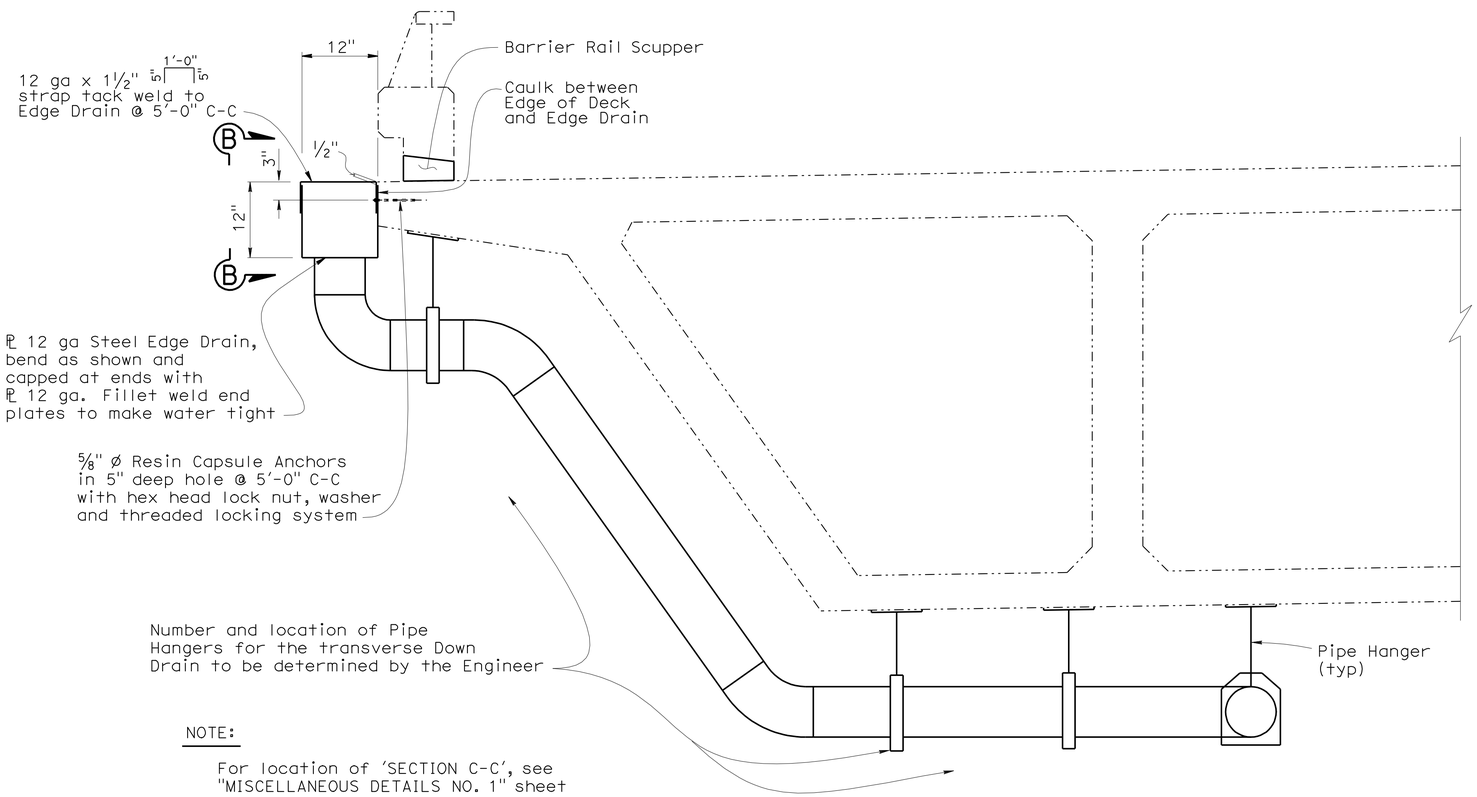

NOTE:

For location of 'SECTION C-C', see "MISCELLANEOUS DETAILS NO. 1" sheet

SECTION C-C

B14-5

1" = 1'-0"

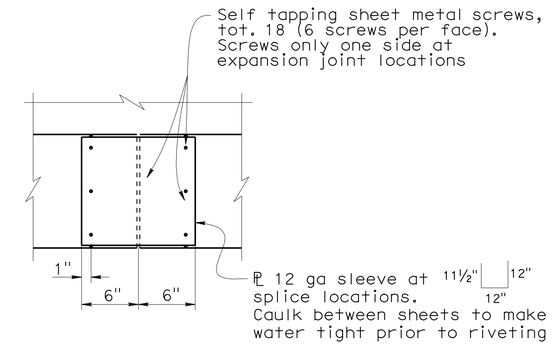

NOTE:

Locations for Edge Drain splice to be determined by the Contractor

SECTION A-A

1½" = 1'-0"

NOTES:

1. All steel pipe to be 10" ø with 0.134" wall thickness and shall be galvanized. Fittings and bends shall have a minimum wall thickness of ⅛". All joints or connections to be connected by a steel pipe sleeve and to be smooth throughout inside of pipe except as noted. All bends to be 2" radius measured along centerline of pipe. All bends to be smooth
2. All metal to be hot dipped galvanized after fabricating

NOTE:
THE CONTRACTOR SHALL VERIFY ALL CONTROLLING FIELD DIMENSIONS BEFORE ORDERING OR FABRICATING ANY MATERIAL.

	BY	CHECKED
DESIGN	T. Skreslet	P. Peterson
DETAILS	K. Kubo	P. Peterson
QUANTITIES	T. Skreslet	P. Peterson

STATE OF CALIFORNIA
DEPARTMENT OF TRANSPORTATION

DIVISION OF ENGINEERING SERVICES
STRUCTURE DESIGN
DESIGN BRANCH 14

BRIDGE NO. 57-0638R/L
POST MILE 8.67

SWEETWATER RIVER BRIDGE
MISCELLANEOUS DETAILS NO. 2

STRUCTURES DESIGN DETAIL SHEET (ENGLISH) (REV. 09-01-10)

ORIGINAL SCALE IN INCHES FOR REDUCED PLANS 0 1 2 3

UNIT: 3613
PROJECT NUMBER & PHASE: 11000200501
CONTRACT NO.: 11-2T1811

DISREGARD PRINTS BEARING EARLIER REVISION DATES

REVISION DATES: 10-20-11 10-21-11 10-13-11 10-13-11

SHEET 3 OF 4

FILE => d_57-0638rl-1-miscdetno2.dgn

USERNAME => s124496 DATE PLOTTED => 09-DEC-2011 TIME PLOTTED => 12:15

DIST	COUNTY	ROUTE	POST MILES TOTAL PROJECT	SHEET No.	TOTAL SHEETS
11	SD	54,805	1.8,5.5/9.4	575	635

Tony Skreslet 8-25-11
REGISTERED CIVIL ENGINEER DATE

12-5-11
PLANS APPROVAL DATE

REGISTERED PROFESSIONAL ENGINEER TONY SKRESLET No. C50676 Exp. 09-30-11 CIVIL STATE OF CALIFORNIA

The State of California or its officers or agents shall not be responsible for the accuracy or completeness of electronic copies of this plan sheet.

NOTES:

1. All steel pipe to have 0.134" wall thickness (min) and shall be galvanized. Fittings and bends shall have a minimum wall thickness of 1/8". All joints or connections to be connected by a steel pipe sleeve and to be smooth throughout inside of pipe except as noted. All bends to be 2" radius measured along centerline of pipe. All bends to be smooth
2. For additional Deck Drain Details, see Standard Plan B7-6, DECK DRAINS TYPES D-1 AND D-2
3. All metal to be hot dipped galvanized after fabricating
4. For location of 'DETAIL B' and 'SECTION D-D', see "MISCELLANEOUS DETAILS NO. 1" sheet
5. For location of Deck Drains, see "MISCELLANEOUS DETAILS NO. 1" sheet

LEGEND:

Indicates Concrete Removal Limits

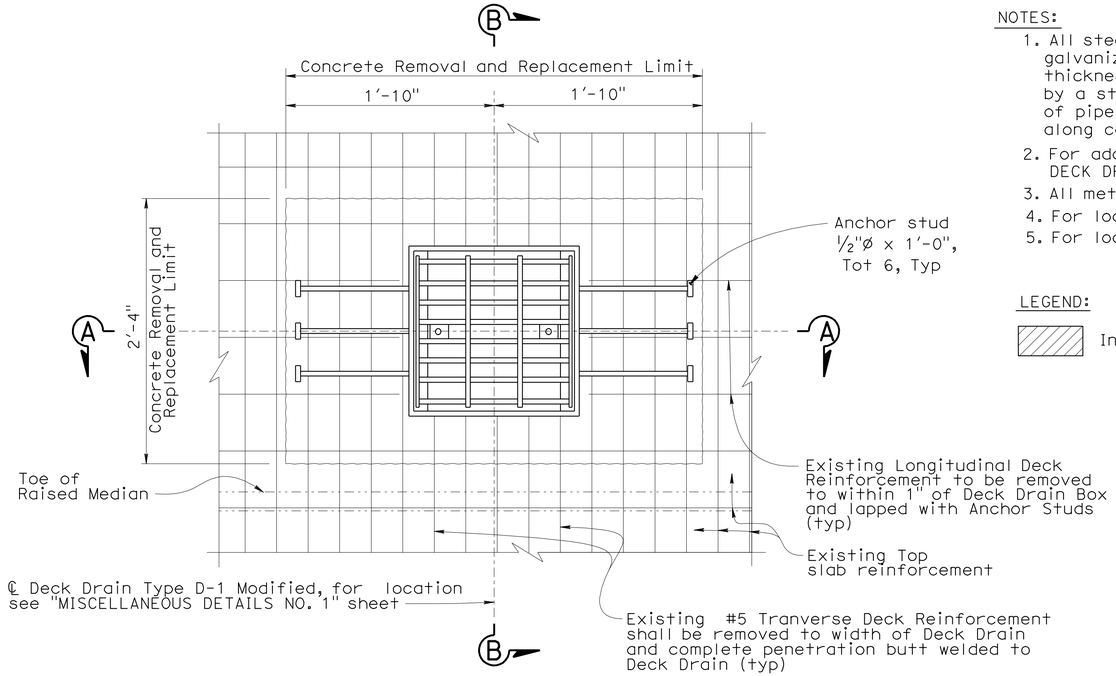

DETAIL B (B7-6)
1 1/2" = 1'

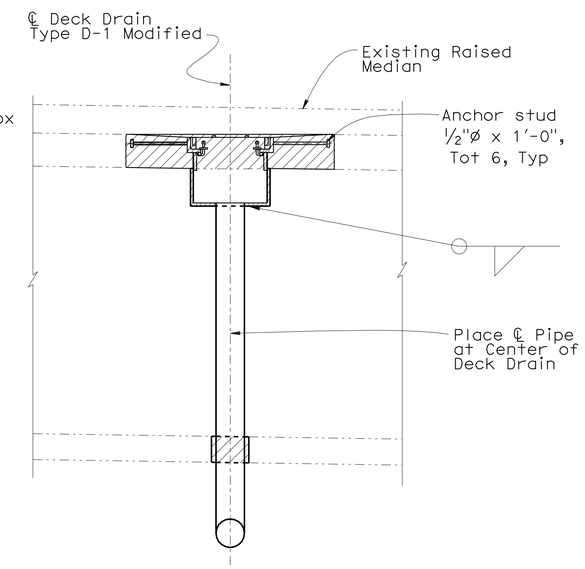

SECTION A-A (B7-6)
3/4" = 1'

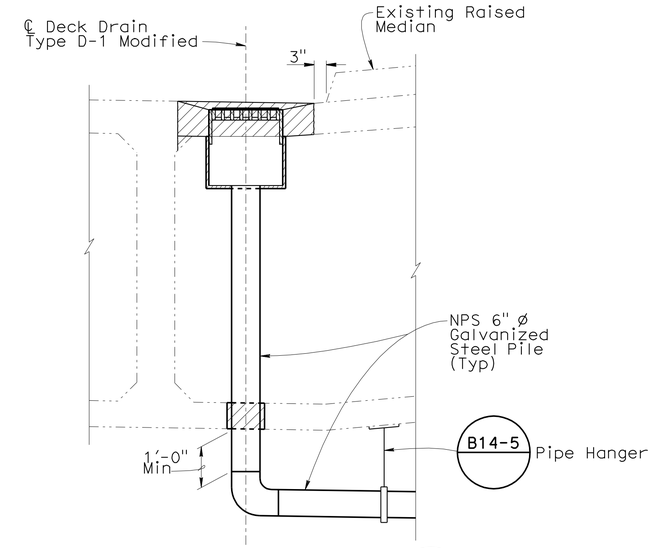

SECTION B-B (B7-6)
3/4" = 1'

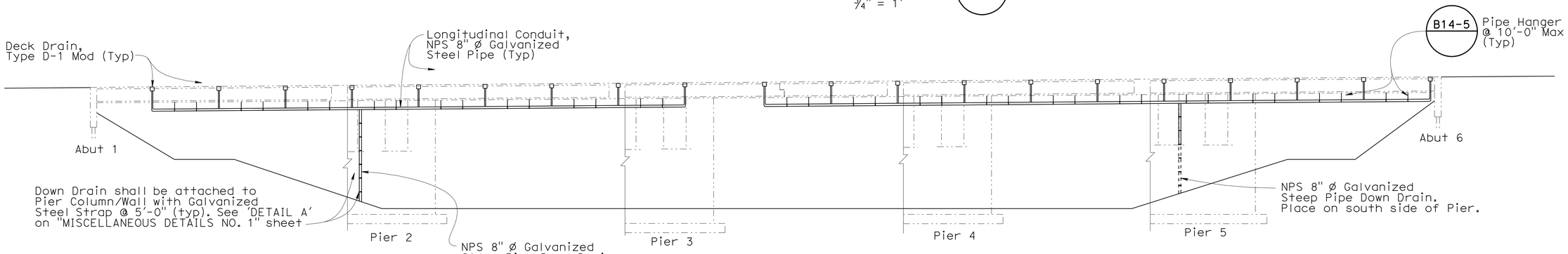

SECTION D-D
1" = 20'

NOTE:
THE CONTRACTOR SHALL VERIFY ALL CONTROLLING FIELD DIMENSIONS BEFORE ORDERING OR FABRICATING ANY MATERIAL.

	BY	CHECKED
DESIGN	T. Skreslet	P. Peterson
DETAILS	K. Kubo / W. Zhang	P. Peterson
QUANTITIES	T. Skreslet	P. Peterson

STATE OF CALIFORNIA
DEPARTMENT OF TRANSPORTATION

DIVISION OF ENGINEERING SERVICES
STRUCTURE DESIGN
DESIGN BRANCH 14

BRIDGE NO. 57-0638R/L
POST MILE 8.67

SWEETWATER RIVER BRIDGE
MISCELLANEOUS DETAILS NO. 3

STRUCTURES DESIGN DETAIL SHEET (ENGLISH) (REV. 09-01-10)

ORIGINAL SCALE IN INCHES FOR REDUCED PLANS 0 1 2 3

UNIT: 3613
PROJECT NUMBER & PHASE: 11000200501
CONTRACT NO.: 11-2T1811

DISREGARD PRINTS BEARING EARLIER REVISION DATES

REVISION DATES: 10-17-11 10-20-11 10-21-11 10-13-11

SHEET 4 OF 4

FILE => d_57-0638ri-1-miscdetno3.dgn

USERNAME => s124496 DATE PLOTTED => 09-DEC-2011 TIME PLOTTED => 12:15

DIST	COUNTY	ROUTE	POST MILES TOTAL PROJECT	SHEET No.	TOTAL SHEETS
11	SD	54,805	1.8,5.5/9.4	576	635

Tony Skreslet
REGISTERED CIVIL ENGINEER — DATE 8-25-11

12-5-11
PLANS APPROVAL DATE

REGISTERED PROFESSIONAL ENGINEER — TONY SKRESLET No. C50676 Exp. 09-30-11 CIVIL — STATE OF CALIFORNIA

The State of California or its officers or agents shall not be responsible for the accuracy or completeness of electronic copies of this plan sheet.

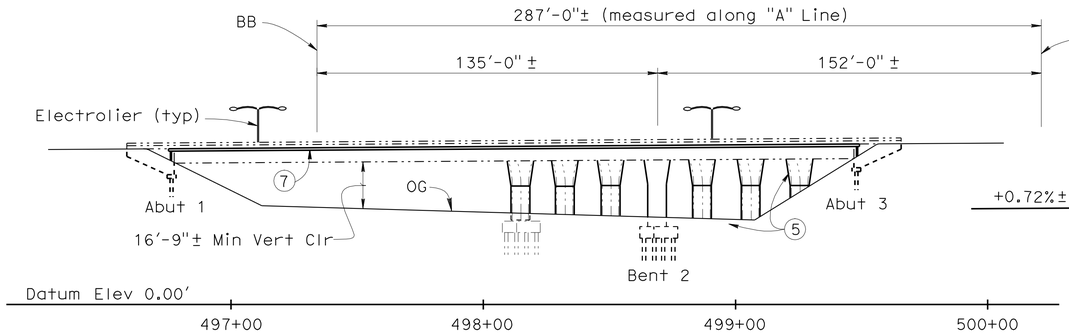

ELEVATION
1" = 30'

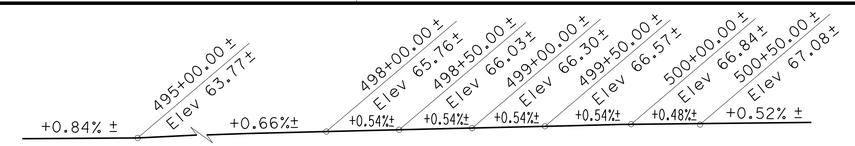

PROFILE GRADE (LEFT)
No Scale

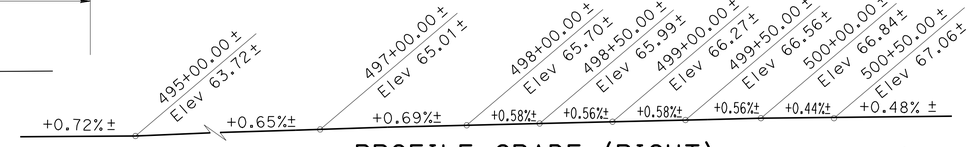

PROFILE GRADE (RIGHT)
No Scale

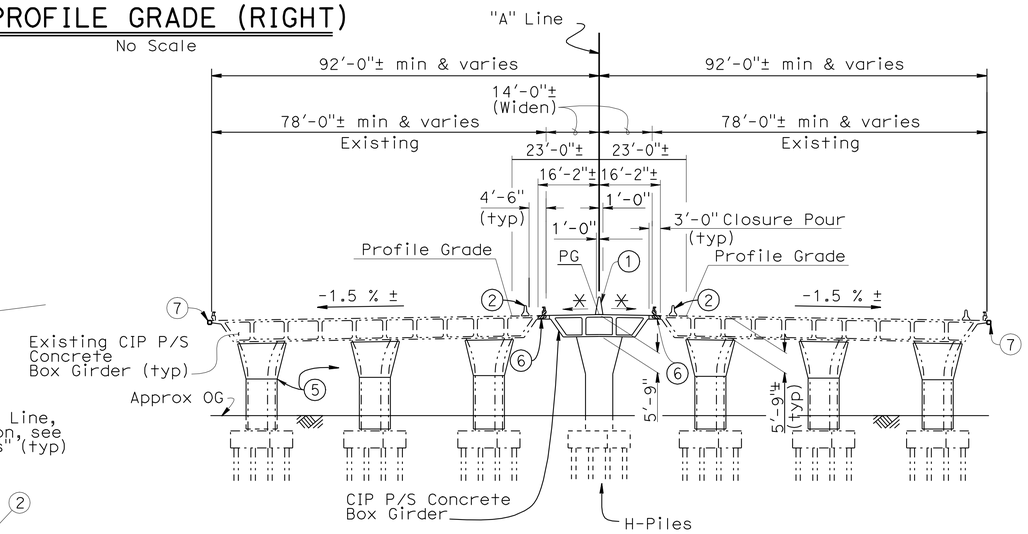

TYPICAL SECTION
1" = 20'

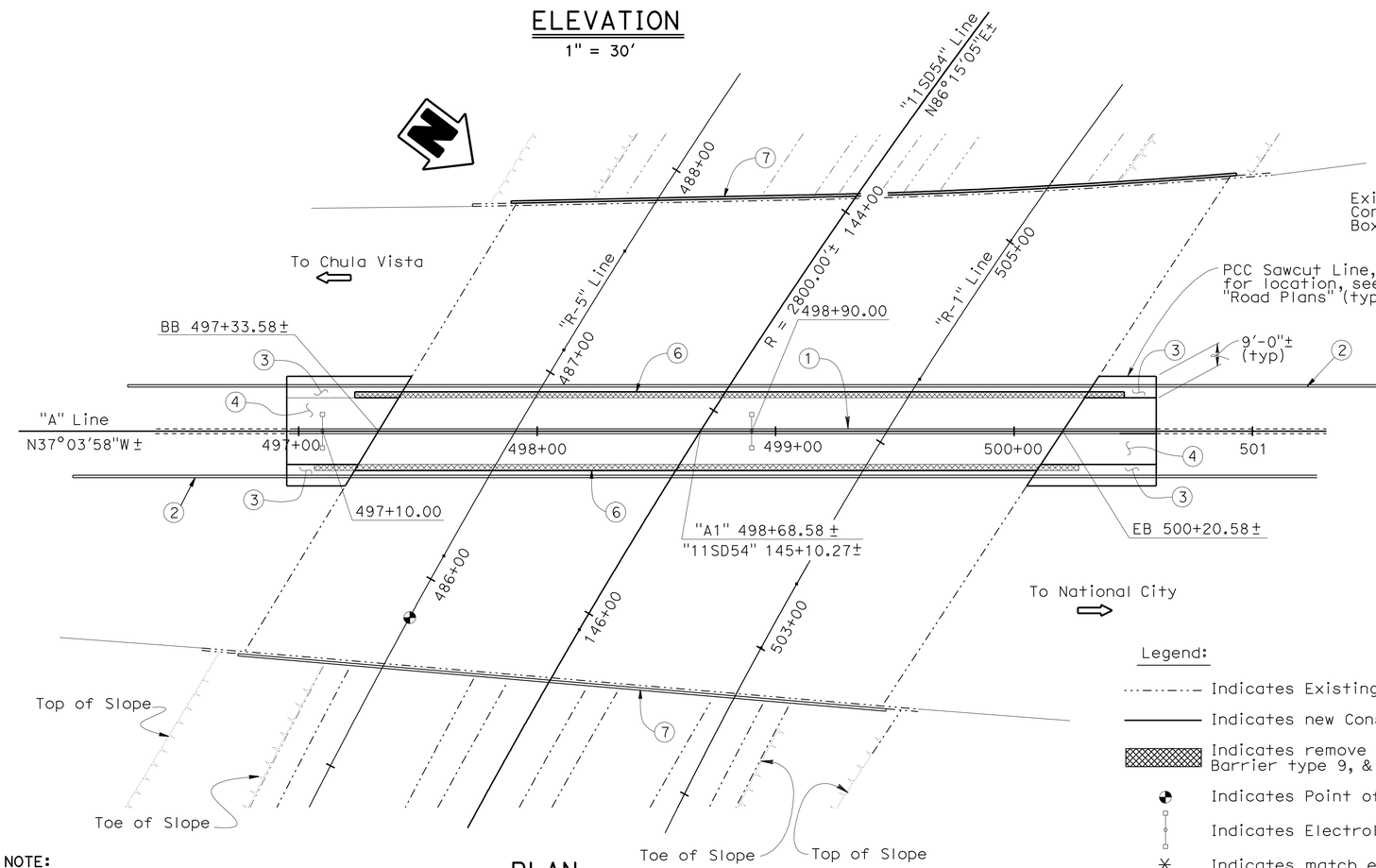

PLAN
1" = 30'

NOTES:

1. Concrete Barrier Type 60GA
2. Temporary Railing (Type K), see "Road Plans"
3. Structure Approach Type R(30D), transverse width from widening to roadway sawcut line, see "Road Plans'
4. Structure Approach Type N(30D), transverse width to match widening
5. Retrofit existing Columns w/ steel Casings
6. Remove existing Barrier Rail, portion of Abutment and portion of Overhang
7. Galvanized Steel Edge Drain

Legend:

- Indicates Existing Structure
- Indicates new Construction
- Indicates remove portion Overhang, Concrete Barrier type 9, & top 3' of Wingwalls
- Indicates Point of Minimum Vertical Clearance
- Indicates Electrolier Type 15D, tot. 2
- Indicates match existing Grade and Cross Slope
- Indicates direction of traffic

NOTE:
THE CONTRACTOR SHALL VERIFY ALL CONTROLLING FIELD DIMENSIONS BEFORE ORDERING OR FABRICATING ANY MATERIAL.

Douglas J. Wancal
DESIGN ENGINEER

	BY	CHECKED			
DESIGN	J. M. Peterson	P. A. Peterson	LOAD & RESISTANCE FACTOR DESIGN	LIVE LOADING: HL93 W/"LOW-BOY": PERMIT DESIGN VEHICLE	
DETAILS	JMP/T. Nguyen	P. A. Peterson	LAYOUT	P. A. Peterson	J. M. Peterson
QUANTITIES	J. M. Peterson	P. A. Peterson	SPECIFICATIONS	R. Franti	PLANS AND SPECS COMPARED X

ORIGINAL SCALE IN INCHES FOR REDUCED PLANS 0 1 2 3

STATE OF CALIFORNIA
DEPARTMENT OF TRANSPORTATION

DIVISION OF ENGINEERING SERVICES
STRUCTURE DESIGN
DESIGN BRANCH 14

BRIDGE NO. 57-0746
POST MILE 8.85

ROUTE 805/54 SEPARATION (WIDEN)
GENERAL PLAN

UNIT: 3613
PROJECT NUMBER & PHASE: 11000200501
CONTRACT NO.: 11-2T1811

DISREGARD PRINTS BEARING EARLIER REVISION DATES

REVISION DATES: 06-17-11 08-18-11 09-12-11 10-10-11

SHEET 1 OF 19

USERNAME => s124436 DATE PLOTTED => 09-DEC-2011 TIME PLOTTED => 12:15

STRUCTURES DESIGN GENERAL PLAN SHEET (ENGLISH) (REV.09-01-10)

FILE => e_57-0746rl-a-gp.dgn

DIST	COUNTY	ROUTE	POST MILES TOTAL PROJECT	SHEET No.	TOTAL SHEETS
11	SD	54,805	1.8,5.5/9.4	577	635

REGISTERED CIVIL ENGINEER — DATE 8-25-11

12-5-11
PLANS APPROVAL DATE

REGISTERED PROFESSIONAL ENGINEER — TONY SKRESLET No. C50676 Exp. 09-30-11 CIVIL — STATE OF CALIFORNIA

The State of California or its officers or agents shall not be responsible for the accuracy or completeness of electronic copies of this plan sheet.

INDEX TO PLANS

SHEET NO.	TITLE
1	GENERAL PLAN
2	INDEX TO PLANS
3	FOUNDATION PLAN
4	ABUTMENT LAYOUT
5	BENT LAYOUT
6	BENT DETAILS
7	BENT FOOTING DETAILS
8	TYPICAL SECTION
9	GIRDER LAYOUT
10	STEEL COLUMN CASING (SEISMIC RETROFIT)
11	STRUCTURE APPROACH TYPE N (30D)
12	STRUCTURE APPROACH TYPE R (30D)
13	STRUCTURE APPROACH DRAINAGE DETAILS
14	MISCELLANEOUS DETAILS NO. 1
15	MISCELLANEOUS DETAILS NO. 2
16	LOG OF TEST BORINGS 1 OF 4
17	LOG OF TEST BORINGS 2 OF 4
18	LOG OF TEST BORINGS 3 OF 4
19	LOG OF TEST BORINGS 4 OF 4

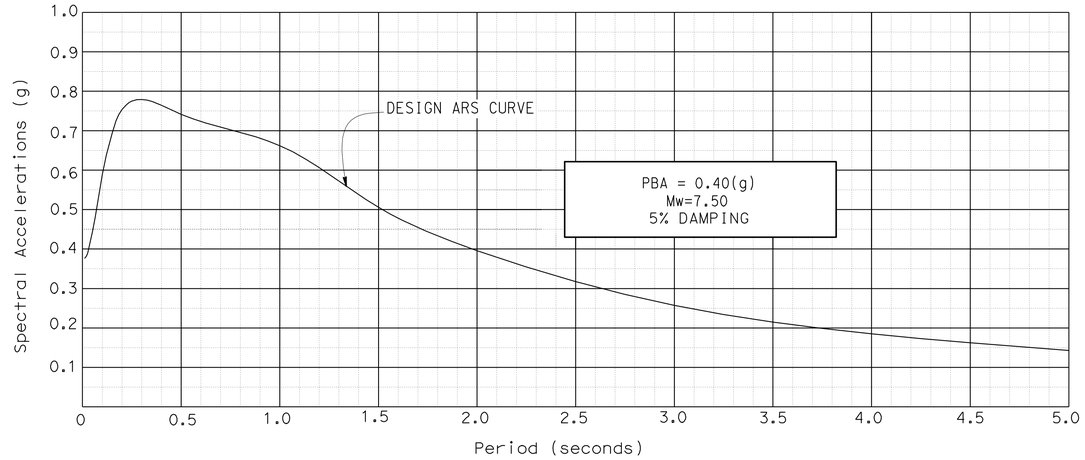

SITE SPECIFIC ACCELERATION RESPONSE SPECTRA

STANDARD PLANS DATED MAY 2006

A10A	ABBREVIATIONS
A62C	LIMITS OF PAYMENT FOR EXCAVATION AND BACKFILL BRIDGE
A76D	CONCRETE BARRIER TYPE 60G
B0-1	BRIDGE DETAILS
B0-3	BRIDGE DETAILS
B0-5	BRIDGE DETAILS
B0-13	BRIDGE DETAILS
B6-21	JOINT SEALS (MAXIMUM MOVEMENT RATING = 2)
B7-1	BOX GIRDER DETAILS
B8-5	CAST-IN-PLACE PRESTRESSED GIRDER DETAILS

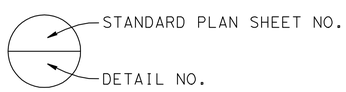

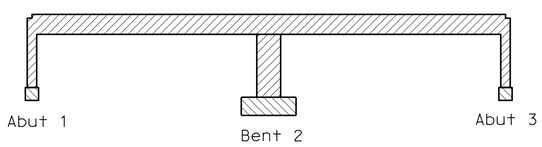

Legend:

Structural Concrete, Bridge (5.0 Ksi at 28 days)

Structural Concrete, Bridge Footing (3.6 Ksi at 28 days)

CONCRETE STRENGTH AND TYPE LIMITS

No Scale

NOTE:
THE CONTRACTOR SHALL VERIFY ALL CONTROLLING FIELD DIMENSIONS BEFORE ORDERING OR FABRICATING ANY MATERIAL.

PILE DATA TABLE

LOCATION	PILE TYPE	NOMINAL RESISTANCE (Kips)		DESIGN TIP ELEVATION COMPRESSION (Kips)	SPECIFIED TIP ELEVATION (Kips)
		Compression	Tension		
Abutment 1	HP 14X89	360	0	-3.0 (a)	-3.0
Bent 2	HP 14X89	380	200	-15.0 (a) -8.0 (b)	-15.0
Abutment 3	HP 14X89	400	0	-12.0 (a)	-12.0

NOTES:

1. Design Tip controlled by (a) Compression (b) Tension
2. Abutment HP 10x57 Piles shall have lugs installed to aid in achieving the required nominal resistance in Compression. For 'STEEL PILE LUG DETAIL', see "ABUTMENT LAYOUT" sheet

GENERAL NOTES
LOAD AND RESISTANCE FACTOR DESIGN

DESIGN: AASHTO LRFD BRIDGE DESIGN SPECIFICATIONS (4th edition 2007 and California Amendments dated December 2008 and September 2010).

SEISMIC DESIGN: CALTRANS SEISMIC DESIGN CRITERIA (SDC) Version 1.5 September 2009

DEAD LOAD: Includes 35 psf for future wearing surface.

LIVE LOADING: HL93 with "Low-Boy" and Permit Design Vehicle.

SEISMIC LOADING: See "Site Specific Acceleration Response Spectra"

REINFORCED CONCRETE: f_y = 60 Ksi
f'_c = See "Concrete Strength and Type Limits."

PRESTRESSED CONCRETE: See "Prestressing Notes" on "Girder Layout" sheet.

STRUCTURAL STEEL: f_y = ASTM A709 Grade 50

QUANTITIES

BRIDGE REMOVAL (PORTION), LOCATION E	LUMP	SUM
STRUCTURE EXCAVATION (BRIDGE)	195	CY
STRUCTURE BACKFILL (BRIDGE)	115	CY
AGGREGATE BASE (APPROACH SLAB)	5	CY
FURNISH STEEL PILING (HP 14 X 89)	1,800	LF
DRIVE STEEL PILE (HP 14 X 89)	36	EA
PRESTRESSING CAST-IN-PLACE CONCRETE	LUMP	SUM
STRUCTURAL CONCRETE, BRIDGE FOOTING	57	CY
STRUCTURAL CONCRETE, BRIDGE	693	CY
STRUCTURAL CONCRETE, APPROACH SLAB (TYPE N)	81	CY
STRUCTURAL CONCRETE, APPROACH SLAB (TYPE R)	52	CY
PAVING NOTCH EXTENSION	33	CF
DRILL AND BOND DOWEL	20	LF
JOINT SEAL (MR 2")	109	LF
BAR REINFORCING STEEL (BRIDGE)	203,955	LB
BAR REINFORCING STEEL (EPOXY COATED) (BRIDGE)	2,162	LB
COLUMN CASING	57,324	LB
BRIDGE DECK DRAINAGE SYSTEM	9,323	LB
CONCRETE BARRIER (TYPE 60GA)	365	LF

	BY	CHECKED
DESIGN	J. M. Peterson	P. A. Peterson
DETAILS	JMP/T. Nguyen	P. A. Peterson
QUANTITIES	J. M. Peterson	P. A. Peterson

STATE OF CALIFORNIA
DEPARTMENT OF TRANSPORTATION

DIVISION OF ENGINEERING SERVICES
STRUCTURE DESIGN
DESIGN BRANCH 14

BRIDGE NO. 57-0746
POST MILE 8.85

ROUTE 805/54 SEPARATION (WIDEN)
INDEX TO PLANS

STRUCTURES DESIGN DETAIL SHEET (ENGLISH) (REV. 09-01-10)

ORIGINAL SCALE IN INCHES FOR REDUCED PLANS 0 1 2 3

UNIT: 3613
PROJECT NUMBER & PHASE: 11000200501
CONTRACT NO.: 11-2T1811

DISREGARD PRINTS BEARING EARLIER REVISION DATES

REVISION DATES: 08-08-11 08-09-11 08-19-11 10-12-11

SHEET 2 OF 19

FILE => e_57-0746rl-b-itp.dgn

USERNAME => s124496 DATE PLOTTED => 09-DEC-2011 TIME PLOTTED => 12:16

DIST	COUNTY	ROUTE	POST MILES TOTAL PROJECT	SHEET No	TOTAL SHEETS
11	SD	54,805	1.8,5.5/9.4	578	635

REGISTERED CIVIL ENGINEER — DATE 12-23-02

12-5-11
PLANS APPROVAL DATE

The State of California or its officers or agents shall not be responsible for the accuracy or completeness of electronic copies of this plan sheet.

REGISTERED PROFESSIONAL ENGINEER — TONY SKRESLET — No. C50676 — Exp. 01-28-11 — CIVIL — STATE OF CALIFORNIA

CURVE DATA

No.	R	Δ	T	L
Ⓐ	3000.00±	6°15'32"±	164.02±	327.72±
Ⓑ	2800.00±	36°51'45"±	933.13±	1801.44±
Ⓒ	150.00±	290°47'05"±	103.51±	761.27±
Ⓓ	2000.00±	13°16'24"±	232.70±	463.33±

SURVEY CONTROL

54/805
Fnd 2" IP w/ 2-1/4" CADT DISK IN AC GORE
101.25 FT Rt. "A" LINE RTE 805
Sta. 496+38.37
N 1,820,195.63
E 6,308,124.39
Elev. = 64.26

805 8.57 (NOT SHOWN ON PLAN)
Fnd PK AND WASHER IN SB INSIDE AC SHOULDER
1.00 FT Lt. "A" LINE RTE 805
Sta. 488+28.22
N 1,819,487.55
E 6,308,531.10
Elev. = 59.01

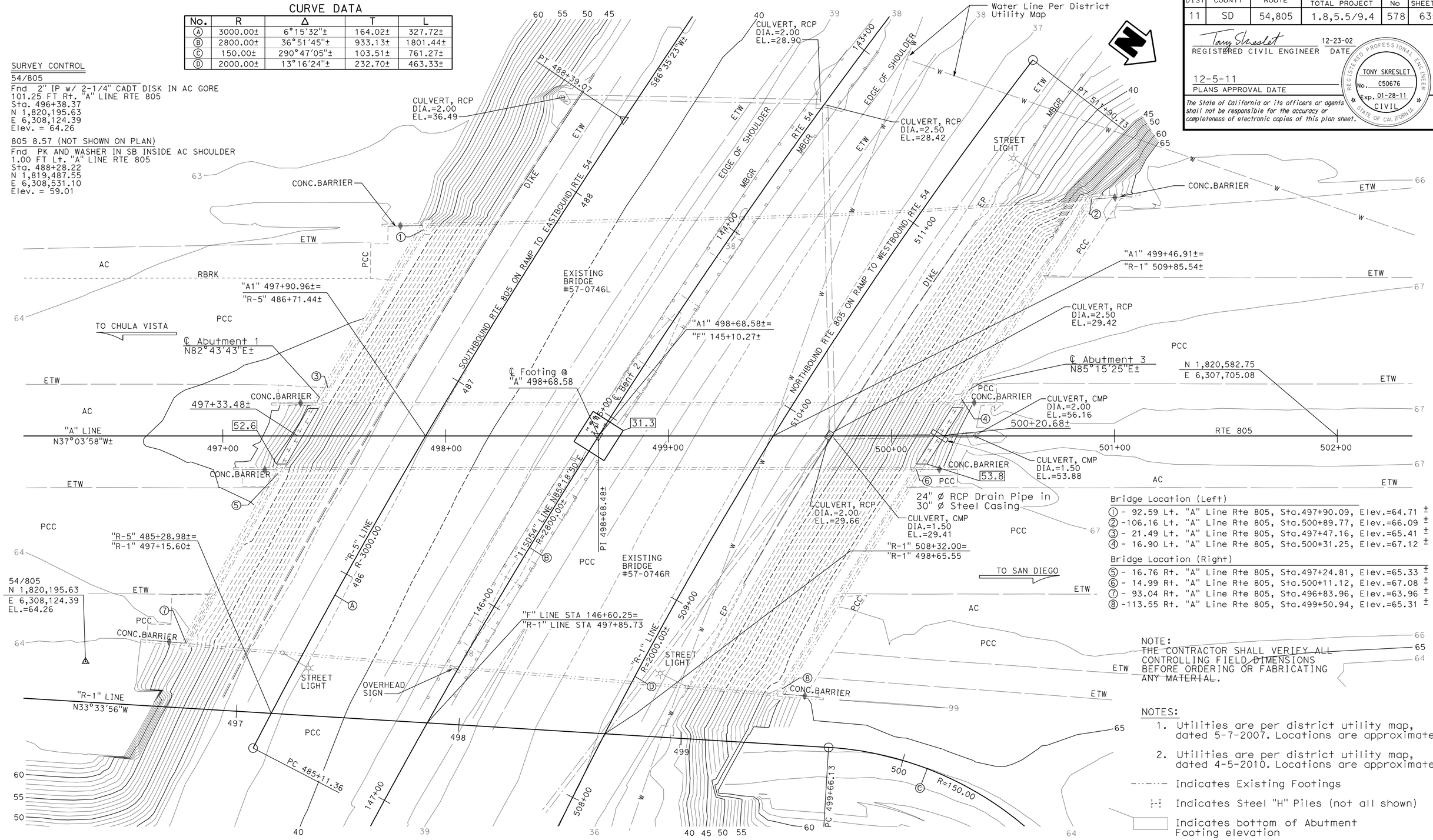

Bridge Location (Left)
① - 92.59 Lt. "A" Line Rte 805, Sta.497+90.09, Elev.=64.71 ±
② -106.16 Lt. "A" Line Rte 805, Sta.500+89.77, Elev.=66.09 ±
③ - 21.49 Lt. "A" Line Rte 805, Sta.497+47.16, Elev.=65.41 ±
④ - 16.90 Lt. "A" Line Rte 805, Sta.500+31.25, Elev.=67.12 ±

Bridge Location (Right)
⑤ - 16.76 Rt. "A" Line Rte 805, Sta.497+24.81, Elev.=65.33 ±
⑥ - 14.99 Rt. "A" Line Rte 805, Sta.500+11.12, Elev.=67.08 ±
⑦ - 93.04 Rt. "A" Line Rte 805, Sta.496+83.96, Elev.=63.96 ±
⑧ -113.55 Rt. "A" Line Rte 805, Sta.499+50.94, Elev.=65.31 ±

NOTE:
THE CONTRACTOR SHALL VERIFY ALL CONTROLLING FIELD DIMENSIONS BEFORE ORDERING OR FABRICATING ANY MATERIAL.

NOTES:
1. Utilities are per district utility map, dated 5-7-2007. Locations are approximate.
2. Utilities are per district utility map, dated 4-5-2010. Locations are approximate.

-·-·-·- Indicates Existing Footings
Indicates Steel "H" Piles (not all shown)
Indicates bottom of Abutment Footing elevation

PRELIMINARY INVESTIGATION SECTION

SCALE	VERT.DATUM NAVD88	PHOTOGRAMMETRY AS OF: X			
1"=20'	HORZ.DATUM NAD83 (2007)	SURVEYED	BY DISTRICT	CHECKED	BY J.PALLARES 08/2010
ALIGNMENT TIES DIST.TRAVERSE SHEET		DRAFTED	BY T.ZOLNIKOV 08/2010	CHECKED	BY T.SCHMALZ 08/2010

DESIGN	BY J. M. Peterson	CHECKED P. A. Peterson
DETAILS	BY T. Nguyen	CHECKED P. A. Peterson
QUANTITIES	BY J. M. Peterson	CHECKED P. A. Peterson

STATE OF CALIFORNIA
DEPARTMENT OF TRANSPORTATION

DIVISION OF ENGINEERING SERVICES
STRUCTURE DESIGN
DESIGN BRANCH 14

BRIDGE NO. 57-0746
POST MILE 8.85

ROUTE 805/54 SEPARATION (WIDEN)
FOUNDATION PLAN

STRUCTURES FOUNDATION PLAN SHEET (ENGLISH) (REV. 10/25/05)

ORIGINAL SCALE IN INCHES FOR REDUCED PLANS 0 1 2 3

CU 3613
PN & PHASE 11000200501

DISREGARD PRINTS BEARING EARLIER REVISION DATES

REVISION DATES: 01/07/11 01-28-11 02-18-11 03-04-11 03-22-11 03-25-11 04-01-11 04-11-11 06-16-11 06-28-11

SHEET 3 OF 19

FILE => e_57-0746rl-c-fp.dgn

USERNAME => s12614 DATE PLOTTED => 11-JAN-2012 TIME PLOTTED => 08:58

DIST	COUNTY	ROUTE	POST MILES TOTAL PROJECT	SHEET No.	TOTAL SHEETS
11	SD	54,805	1.8,5.5/9.4	579	635

Tony Skreslet 8-25-11
REGISTERED CIVIL ENGINEER DATE

12-5-11
PLANS APPROVAL DATE

REGISTERED PROFESSIONAL ENGINEER TONY SKRESLET No. C50676 Exp. 09-30-11 CIVIL STATE OF CALIFORNIA

The State of California or its officers or agents shall not be responsible for the accuracy or completeness of electronic copies of this plan sheet.

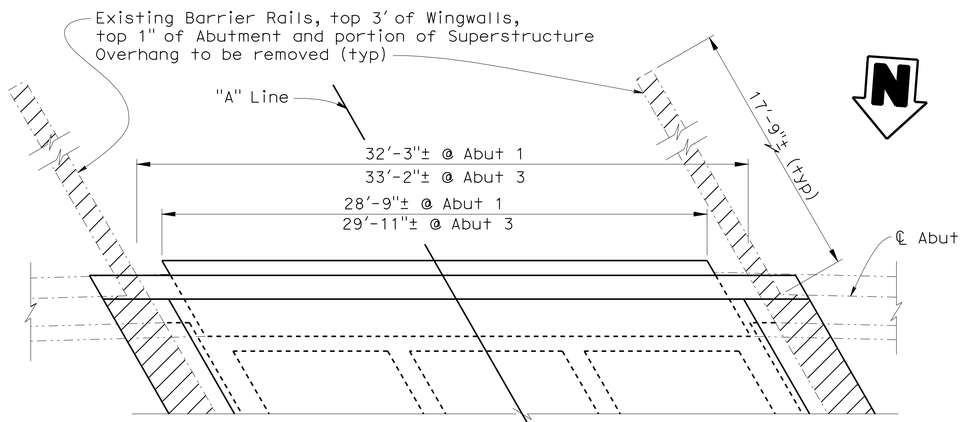

NOTES:
1. Abutment 3 Shown, Abutment 1 similar
2. New Abutment to be aligned symetrically between existing Structures
3. Inside face of new Abutment Stem Wall location shall match Existing Stem Wall.

PLAN
1/4" = 1'-0"

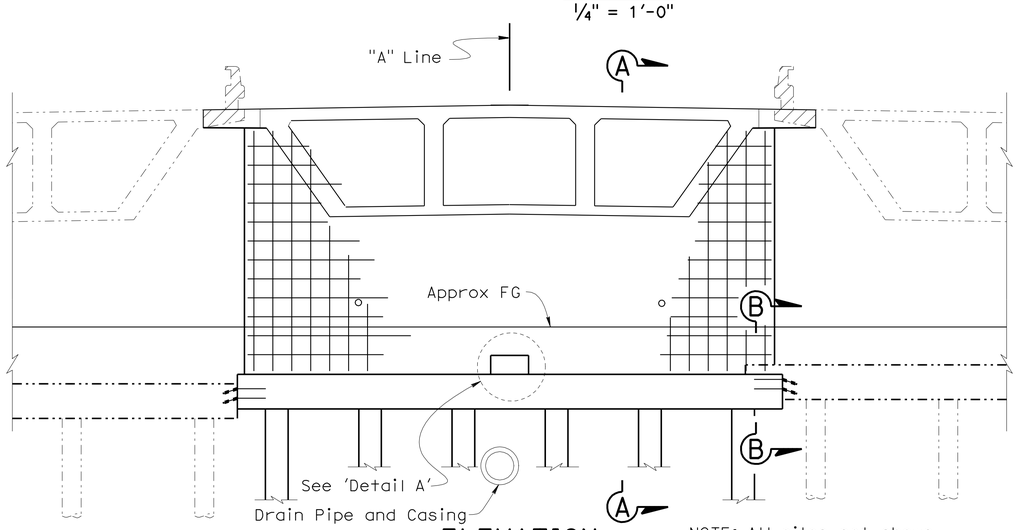

ELEVATION
1/4" = 1'-0"

NOTE: All piles not shown

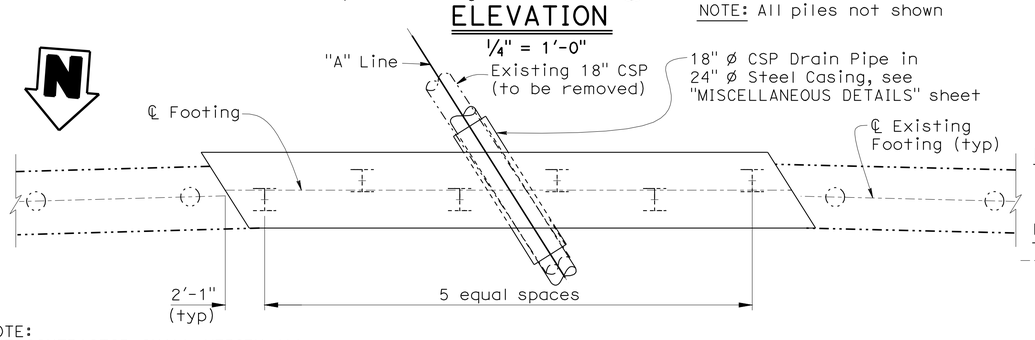

NOTE:
THE CONTRACTOR SHALL VERIFY ALL CONTROLLING FIELD DIMENSIONS BEFORE ORDERING OR FABRICATING ANY MATERIAL.

FOOTING PLAN
1/4" = 1'-0"

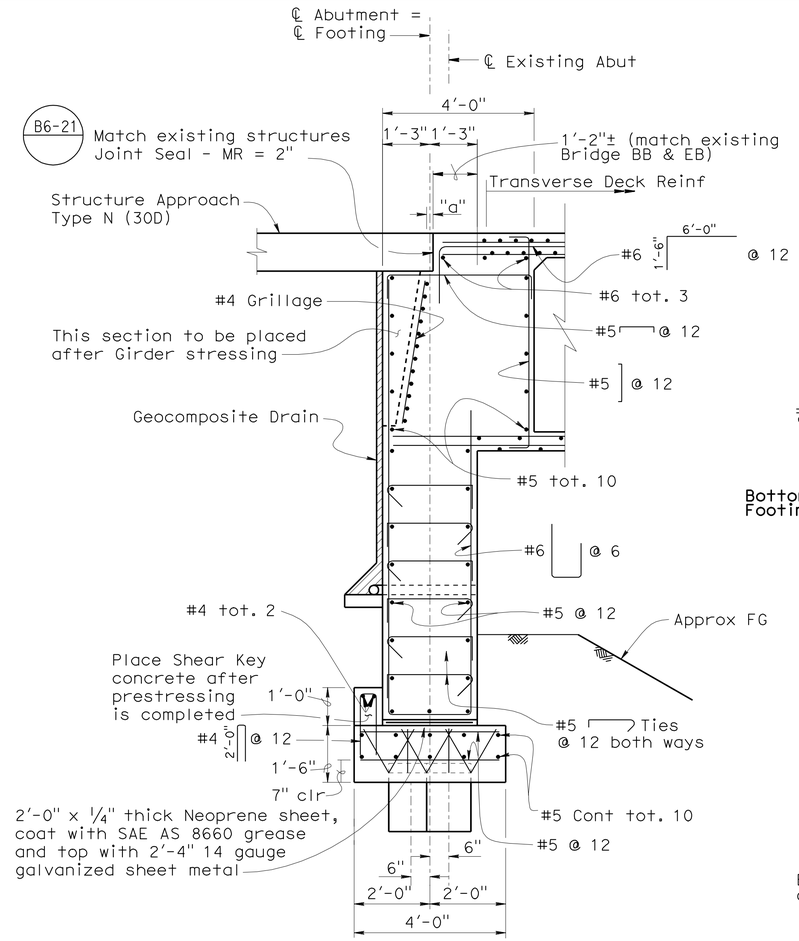

SECTION A-A
1/2" = 1'-0"

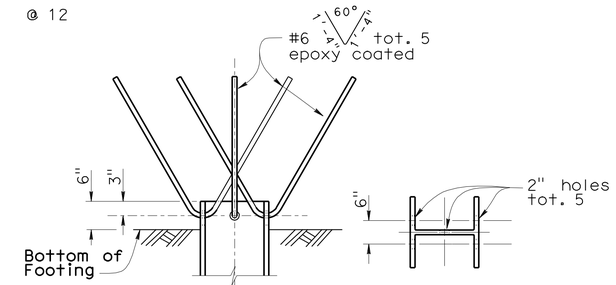

ELEVATION PLAN

STEEL PILE ANCHOR DETAIL
No Scale

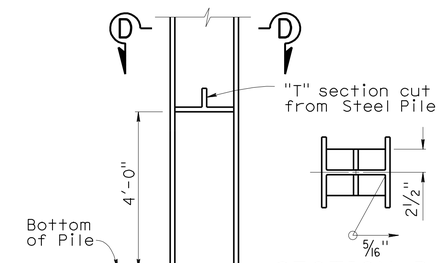

SECTION D-D

STEEL PILE LUG DETAIL
No Scale

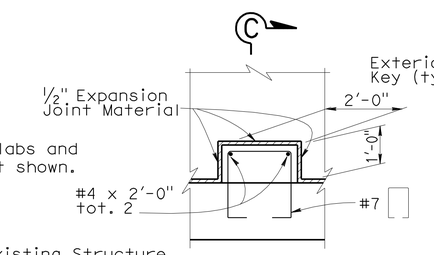

DETAIL A
1/2" = 1'-0"

NOTE: New Approach Slabs and Barrier Rail not shown.

LEGEND:
- Indicates Existing Structure
- Indicates HP 14x89 Piles
- Indicates Existing Pile
- Indicates portion of Existing Abutment and Superstructure to be removed

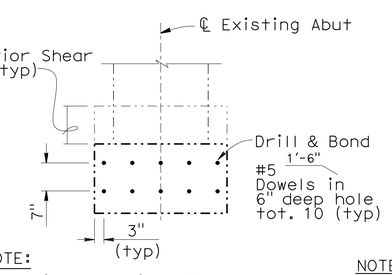

NOTE:
Vertical location of Dowels may be adjusted to accommodate to field condition

SECTION B-B
1/2" = 1'-0"

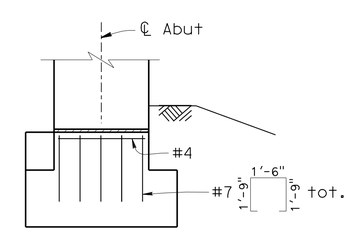

NOTE:
Reinforcement shown is in addition to that shown on 'Section A-A'

SECTION C-C
1/2" = 1'-0"

	BY	CHECKED
DESIGN	J. M. Peterson	P. A. Peterson
DETAILS	JMP/T. Nguyen	P. A. Peterson
QUANTITIES	J. M. Peterson	P. A. Peterson

STATE OF CALIFORNIA
DEPARTMENT OF TRANSPORTATION

DIVISION OF ENGINEERING SERVICES
STRUCTURE DESIGN
DESIGN BRANCH 14

BRIDGE NO. 57-0746
POST MILE 8.85

ROUTE 805/54 SEPARATION (WIDEN)
ABUTMENT LAYOUT

STRUCTURES DESIGN DETAIL SHEET (ENGLISH) (REV. 09-01-10)

ORIGINAL SCALE IN INCHES FOR REDUCED PLANS 0 1 2 3

UNIT: 3613
PROJECT NUMBER & PHASE: 11000200501
CONTRACT NO.: 11-2T1811

DISREGARD PRINTS BEARING EARLIER REVISION DATES

REVISION DATES: 08-05-11 08-04-11 07-07-11 07-13-11

SHEET 4 OF 19

FILE => e_57-0746r1-f-abut_lo.dgn

USERNAME => s124496 DATE PLOTTED => 09-DEC-2011 TIME PLOTTED => 12:16

DIST	COUNTY	ROUTE	POST MILES TOTAL PROJECT	SHEET No.	TOTAL SHEETS
11	SD	54,805	1.8,5.5/9.4	580	635

Tony Skreslet 8-25-11
REGISTERED CIVIL ENGINEER DATE

12-5-11
PLANS APPROVAL DATE

REGISTERED PROFESSIONAL ENGINEER TONY SKRESLET No. C50676 Exp. 09-30-11 CIVIL STATE OF CALIFORNIA

The State of California or its officers or agents shall not be responsible for the accuracy or completeness of electronic copies of this plan sheet.

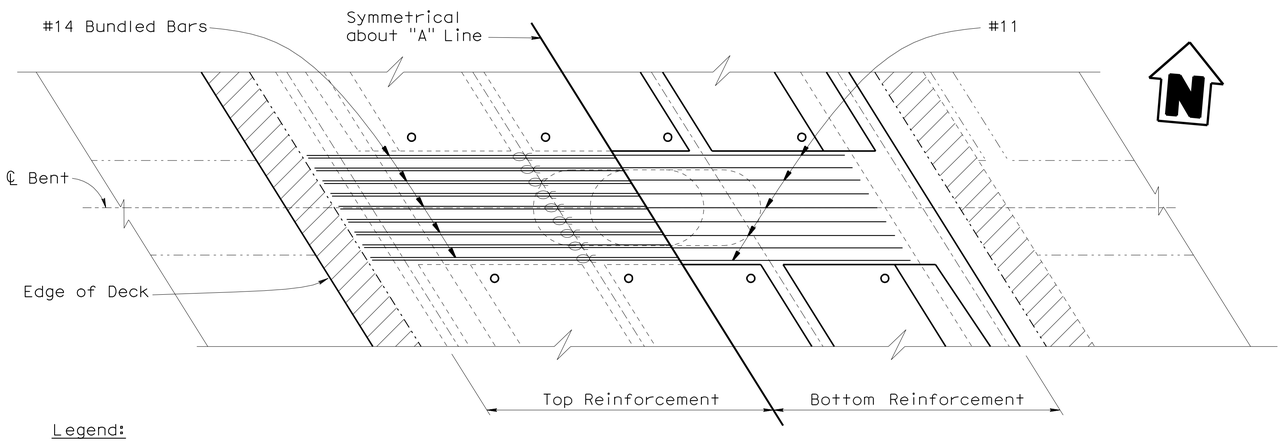

Legend:
Indicates bundled bars
Indicates Bridge removal (portion)

PLAN
1/4" = 1'-0"

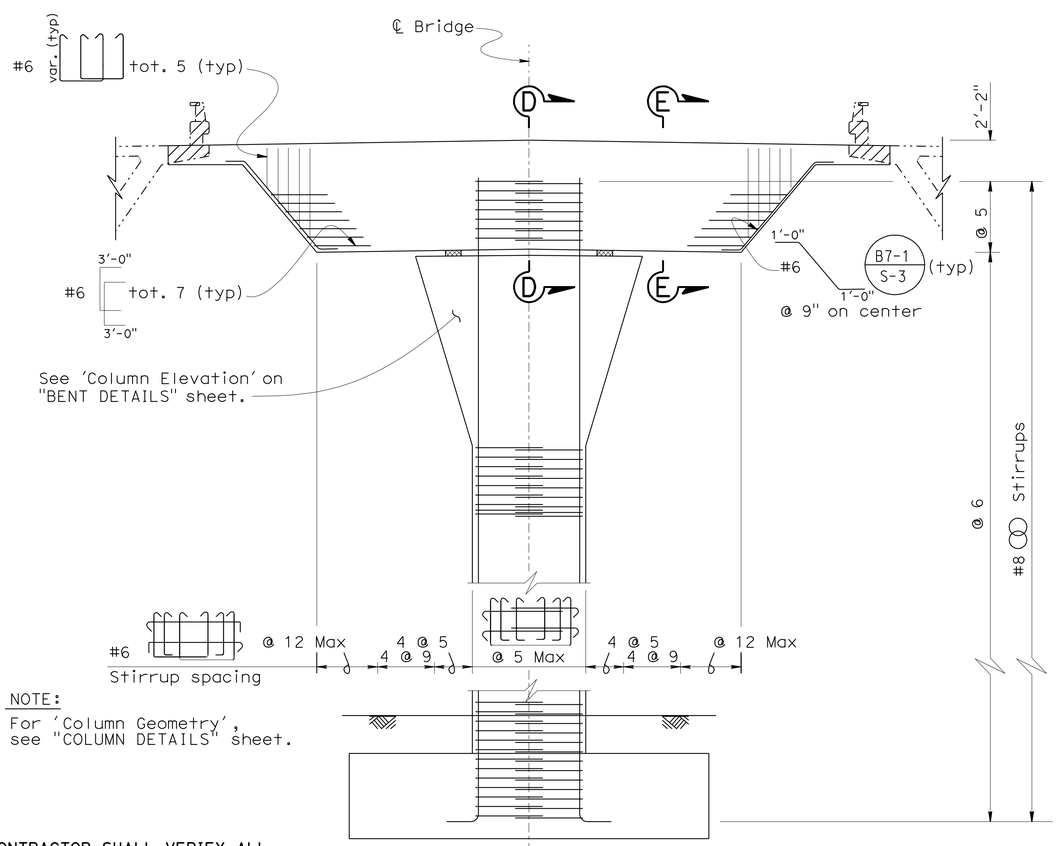

NOTE:
For 'Column Geometry', see "COLUMN DETAILS" sheet.

ELEVATION
1/4" = 1'-0"

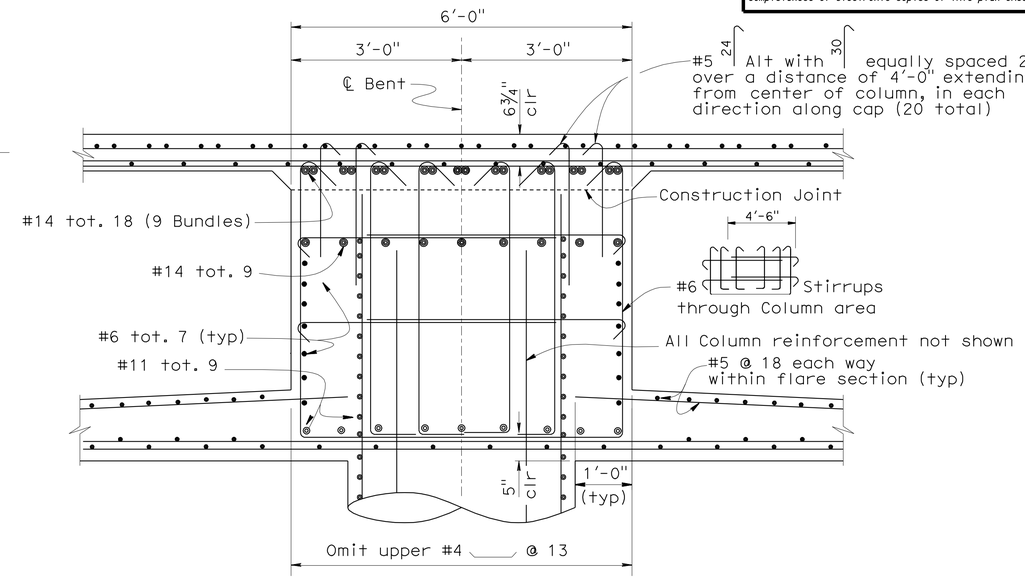

SECTION D-D
3/4" = 1'-0"

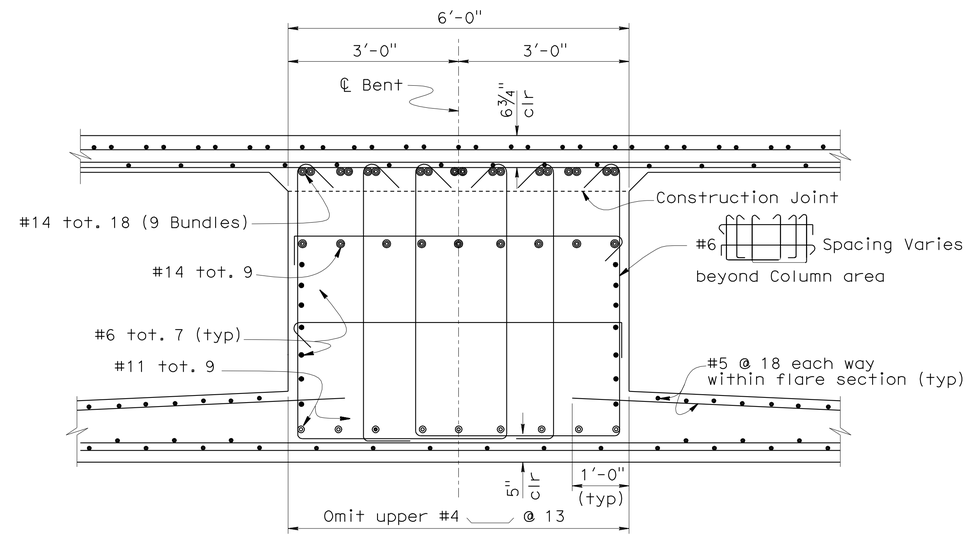

SECTION E-E
3/4" = 1'-0"

NOTE: Place Bent Cap reinforcement and stirrups normal to Bent

NOTE:
THE CONTRACTOR SHALL VERIFY ALL CONTROLLING FIELD DIMENSIONS BEFORE ORDERING OR FABRICATING ANY MATERIAL.

	BY	CHECKED
DESIGN	J. M. Peterson	P. A. Peterson
DETAILS	JMP/ T. Nguyen	P. A. Peterson
QUANTITIES	J. M. Peterson	P. A. Peterson

STATE OF CALIFORNIA
DEPARTMENT OF TRANSPORTATION

DIVISION OF ENGINEERING SERVICES
STRUCTURE DESIGN
DESIGN BRANCH 14

BRIDGE NO. 57-0746
POST MILE 8.85

ROUTE 805/54 SEPARATION (WIDEN)
BENT LAYOUT

STRUCTURES DESIGN DETAIL SHEET (ENGLISH) (REV. 09-01-10)

ORIGINAL SCALE IN INCHES FOR REDUCED PLANS 0 1 2 3

UNIT: 3613
PROJECT NUMBER & PHASE: 11000200501
CONTRACT NO.: 11-2T1811

DISREGARD PRINTS BEARING EARLIER REVISION DATES
REVISION DATES: 03-04-11 05-06-11 06-15-11 04-11-11

SHEET 5 OF 19

FILE => e_57-0746rl-h-bnt_lo.dgn

USERNAME => s124496 DATE PLOTTED => 09-DEC-2011 TIME PLOTTED => 12:16

DIST	COUNTY	ROUTE	POST MILES TOTAL PROJECT	SHEET No.	TOTAL SHEETS
11	SD	54,805	1.8,5.5/9.4	581	635

Tony Skreslet 8-25-11
REGISTERED CIVIL ENGINEER DATE

12-5-11
PLANS APPROVAL DATE

REGISTERED PROFESSIONAL ENGINEER TONY SKRESLET No. C50676 Exp. 09-30-11 CIVIL STATE OF CALIFORNIA

The State of California or its officers or agents shall not be responsible for the accuracy or completeness of electronic copies of this plan sheet.

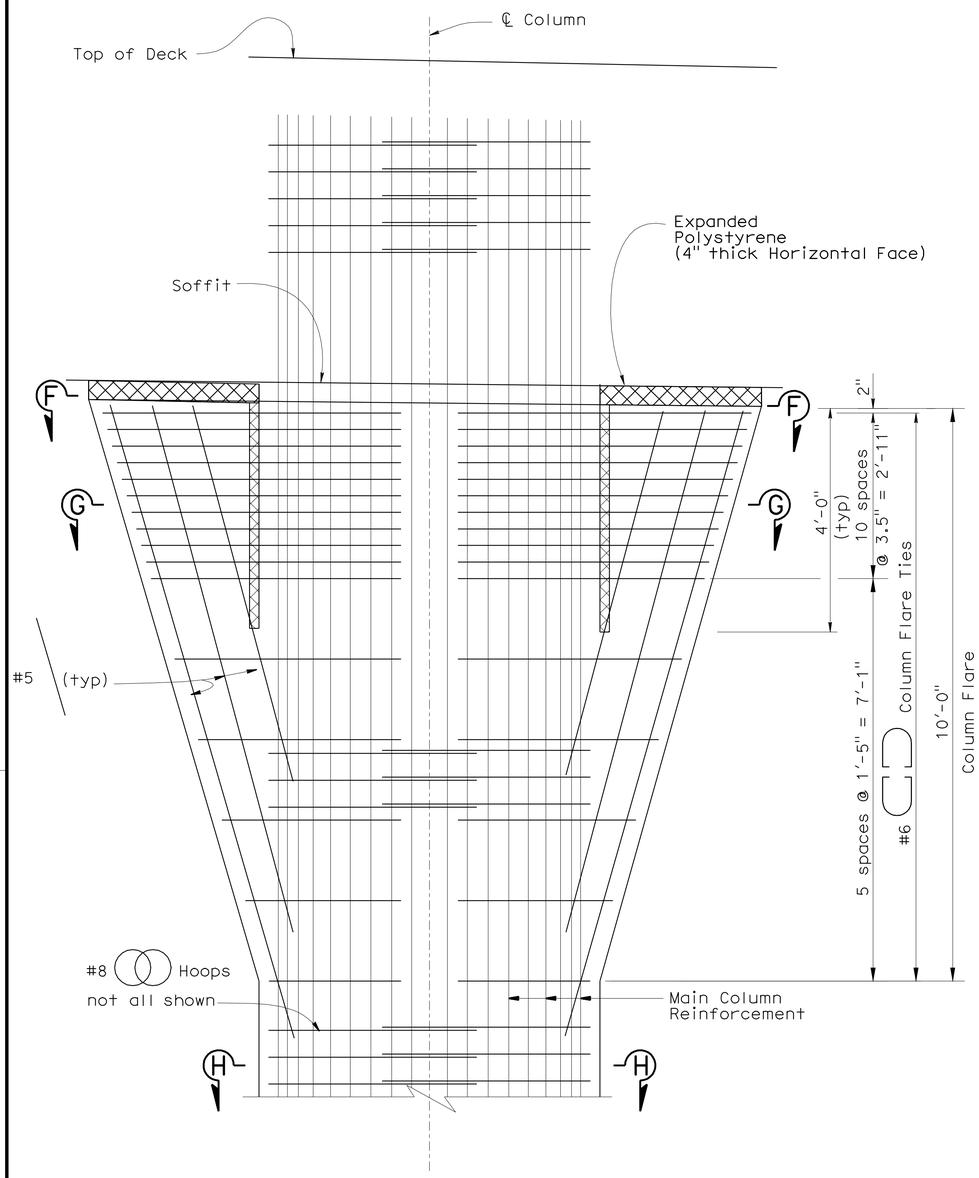

COLUMN ELEVATION

¾" = 1'-0"

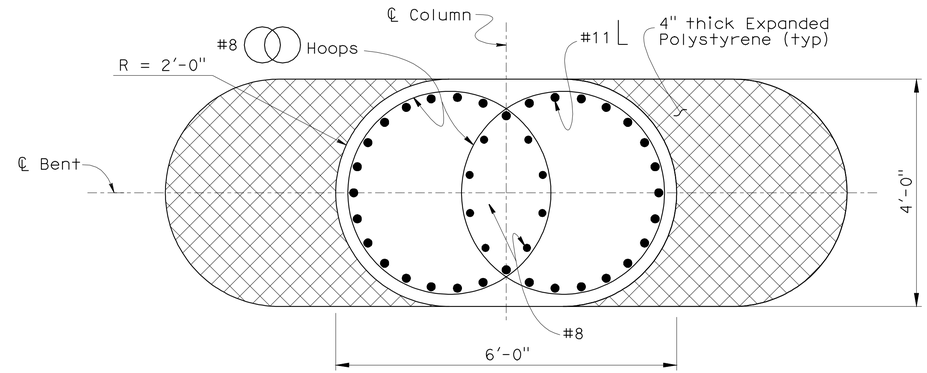

SECTION F-F

¾" = 1'-0"

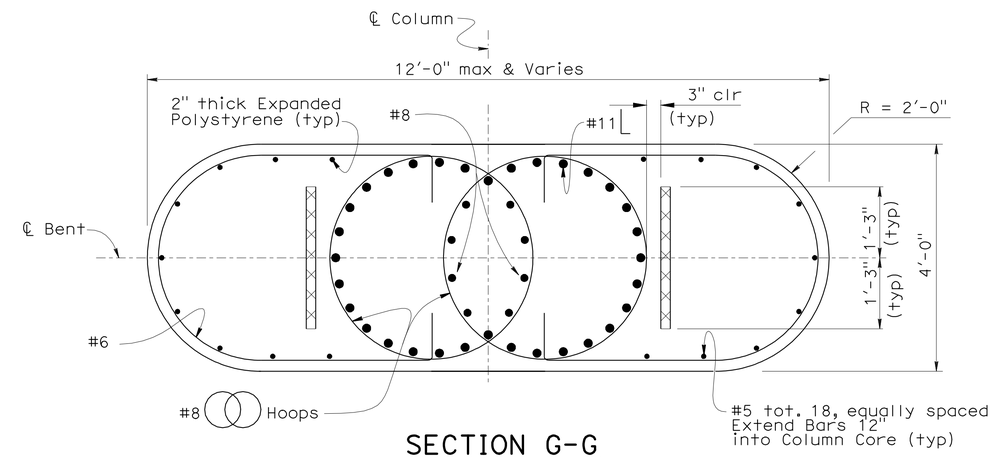

SECTION G-G

¾" = 1'-0"

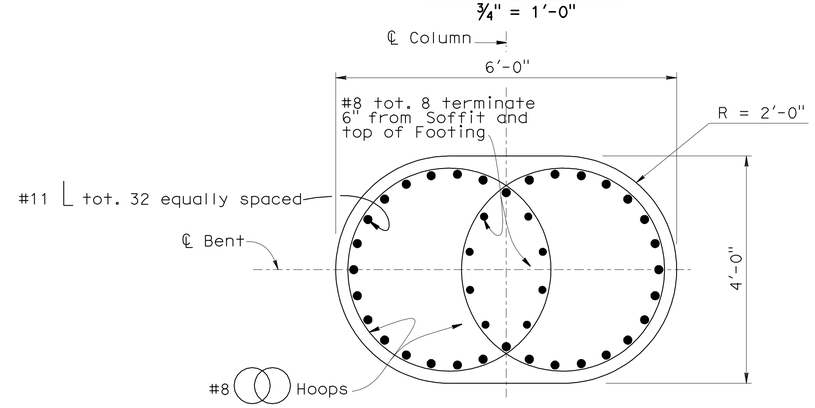

SECTION H-H

¾" = 1'-0"

NOTE:
THE CONTRACTOR SHALL VERIFY ALL CONTROLLING FIELD DIMENSIONS BEFORE ORDERING OR FABRICATING ANY MATERIAL.

NOTE: For Footing details see "BENT FOOTING DETAILS" sheet.

	BY	CHECKED
DESIGN	J. M. Peterson	P. A. Peterson
DETAILS	JMP/ T. Nguyen	P. A. Peterson
QUANTITIES	J. M. Peterson	P. A. Peterson

STATE OF CALIFORNIA
DEPARTMENT OF TRANSPORTATION

DIVISION OF ENGINEERING SERVICES
STRUCTURE DESIGN
DESIGN BRANCH 14

BRIDGE NO. 57-0746
POST MILE 8.85

ROUTE 805/54 SEPARATION (WIDEN)
BENT DETAILS

STRUCTURES DESIGN DETAIL SHEET (ENGLISH) (REV. 09-01-10)

ORIGINAL SCALE IN INCHES FOR REDUCED PLANS 0 1 2 3

UNIT: 3613
PROJECT NUMBER & PHASE: 11000200501
CONTRACT NO.: 11-2T1811

DISREGARD PRINTS BEARING EARLIER REVISION DATES → 07-13-11 07-14-11 08-11-11 08-16-11

SHEET 6 OF 19

FILE => e_57-0746ri-i-bnt_det.dgn

USERNAME => s124496 DATE PLOTTED => 09-DEC-2011 TIME PLOTTED => 12:16

DIST	COUNTY	ROUTE	POST MILES TOTAL PROJECT	SHEET No.	TOTAL SHEETS
11	SD	54,805	1.8,5.5/9.4	582	635

Tony Skreslet 8-25-11
REGISTERED CIVIL ENGINEER DATE

12-5-11
PLANS APPROVAL DATE

REGISTERED PROFESSIONAL ENGINEER TONY SKRESLET No. C50676 Exp. 09-30-11 CIVIL STATE OF CALIFORNIA

The State of California or its officers or agents shall not be responsible for the accuracy or completeness of electronic copies of this plan sheet.

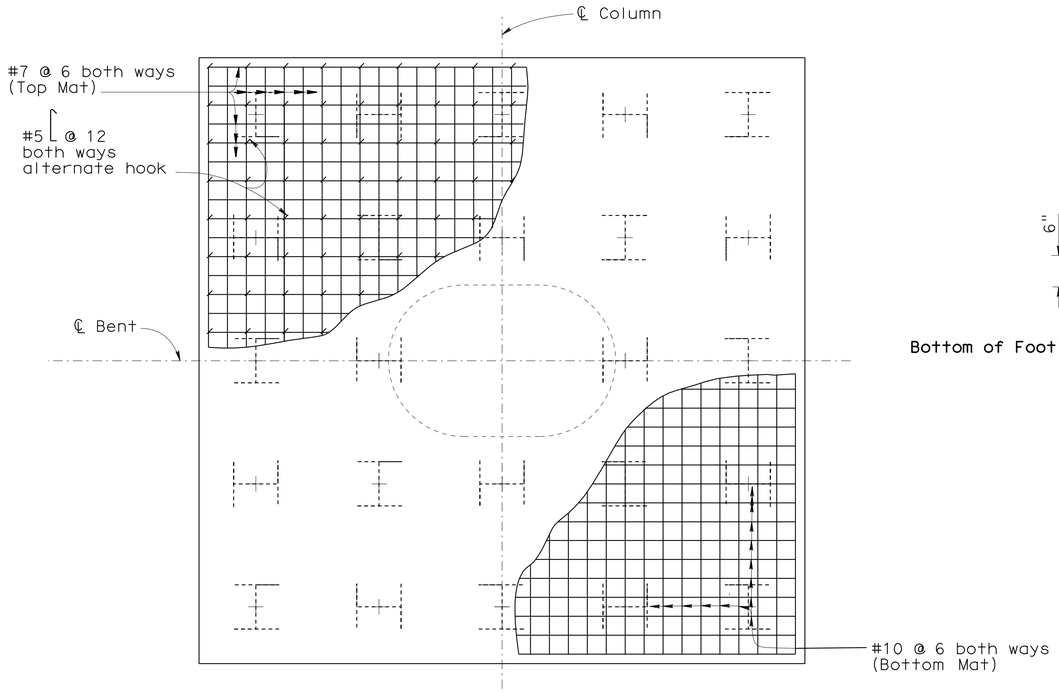

PLAN - REINFORCEMENT

½" = 1'-0"

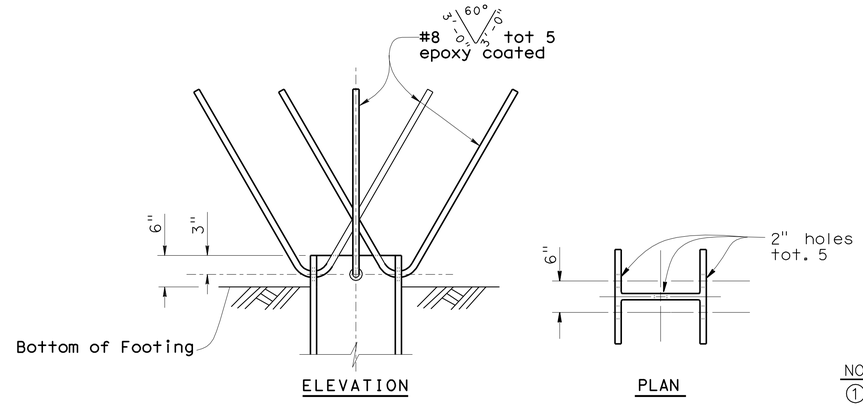

STEEL PILE ANCHOR

No Scale

NOTES:

1. Details are symmetrical about ℄ Bent and ℄ Footing
2. Stirrups are discontinued @ Column
3. Top Mat may be adjusted to clear Column reinforment, as directed by engineer
4. Continue Hoops to bottom of Column reinforment

Indicates HP 14x89 Pile

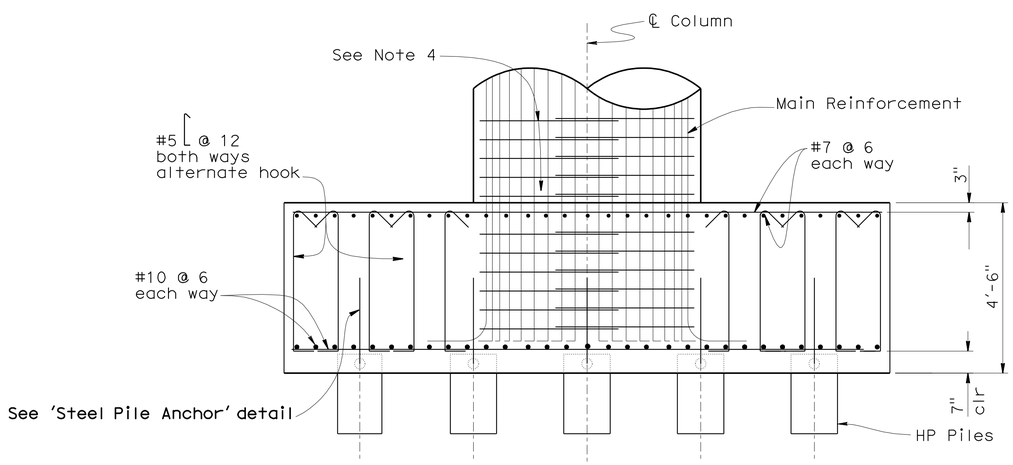

ELEVATION

½" = 1'-0"

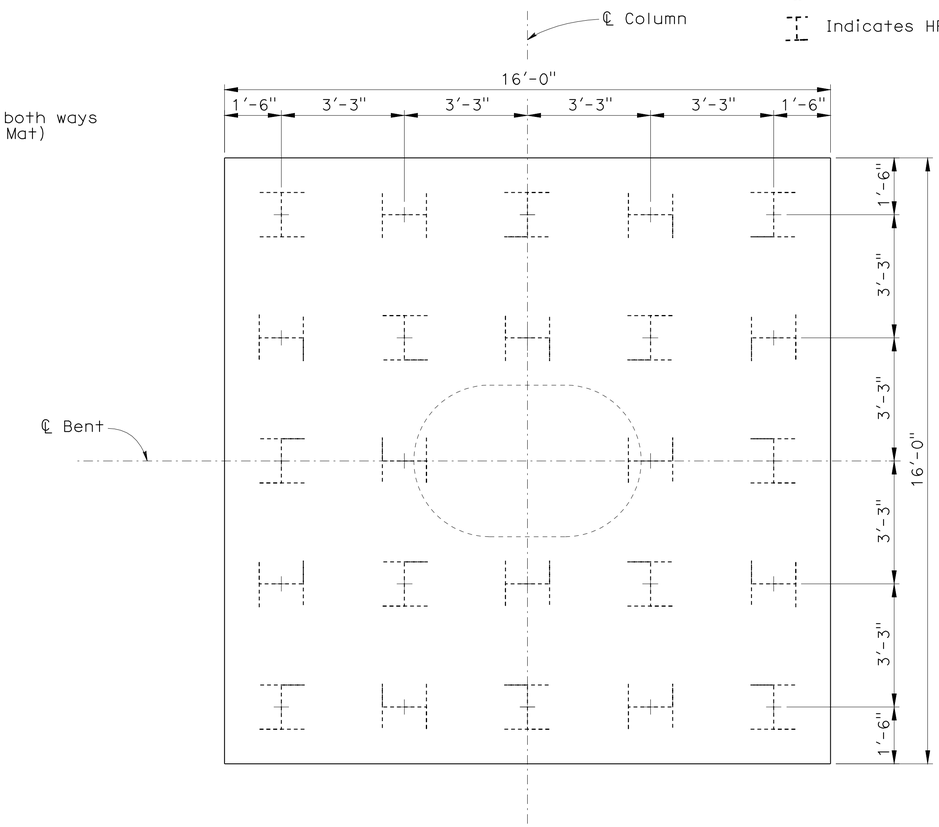

PLAN - PILE LAYOUT

½" = 1'-0"

NOTE:
THE CONTRACTOR SHALL VERIFY ALL CONTROLLING FIELD DIMENSIONS BEFORE ORDERING OR FABRICATING ANY MATERIAL.

	BY	CHECKED
DESIGN	J. M. Peterson	P. A. Peterson
DETAILS	JMP/T. Nguyen	P. A. Peterson
QUANTITIES	J. M. Peterson	P. A. Peterson

STATE OF CALIFORNIA
DEPARTMENT OF TRANSPORTATION

DIVISION OF ENGINEERING SERVICES
STRUCTURE DESIGN
DESIGN BRANCH 14

BRIDGE NO. 57-0746
POST MILE 8.85

ROUTE 805/54 SEPARATION (WIDEN)
BENT FOOTING DETAILS

STRUCTURES DESIGN DETAIL SHEET (ENGLISH) (REV. 09-01-10)

ORIGINAL SCALE IN INCHES FOR REDUCED PLANS 0 1 2 3

UNIT: 3613
PROJECT NUMBER & PHASE: 11000200501
CONTRACT NO.: 11-2T1811

DISREGARD PRINTS BEARING EARLIER REVISION DATES
REVISION DATES 04-21-11 04-27-11 06-16-11 08-25-11

SHEET 7 OF 19

FILE => e_57-0746ri-1-bnt_fdt.dgn

USERNAME => s124496 DATE PLOTTED => 09-DEC-2011 TIME PLOTTED => 12:16

DIST	COUNTY	ROUTE	POST MILES TOTAL PROJECT	SHEET No.	TOTAL SHEETS
11	SD	54,805	1.8,5.5/9.4	583	635

Tony Skreslet 8-25-11
REGISTERED CIVIL ENGINEER DATE

12-5-11
PLANS APPROVAL DATE

REGISTERED PROFESSIONAL ENGINEER TONY SKRESLET No. C50676 Exp. 09-30-11 CIVIL STATE OF CALIFORNIA

The State of California or its officers or agents shall not be responsible for the accuracy or completeness of electronic copies of this plan sheet.

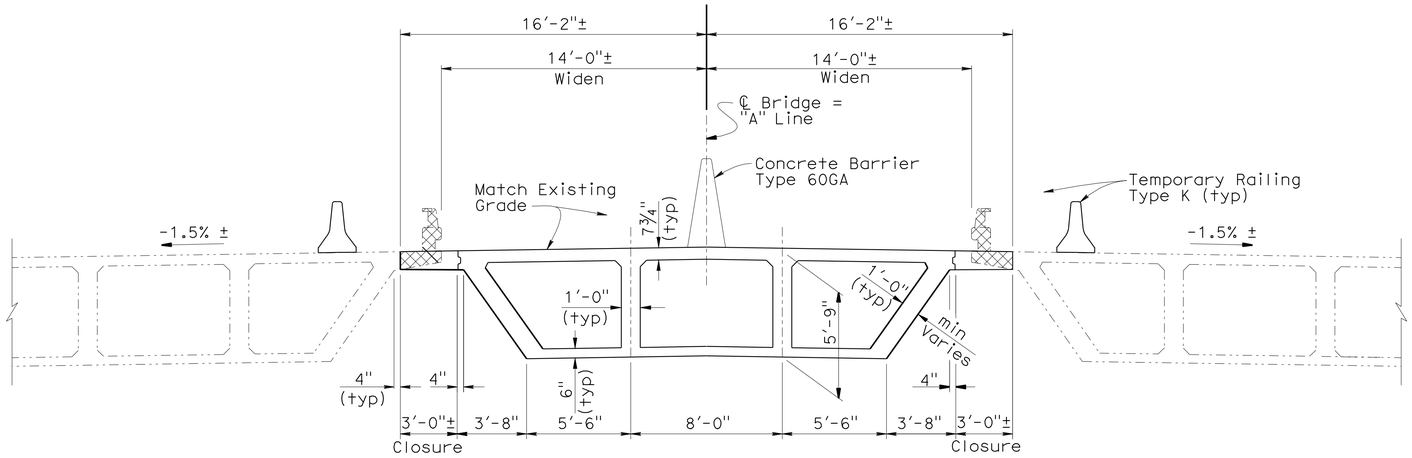

TYPICAL SECTION

¼" = 1'-0"

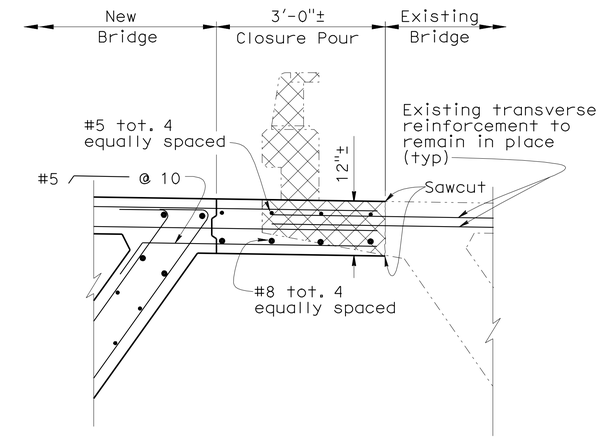

CLOSURE DETAIL

¾" = 1'-0"

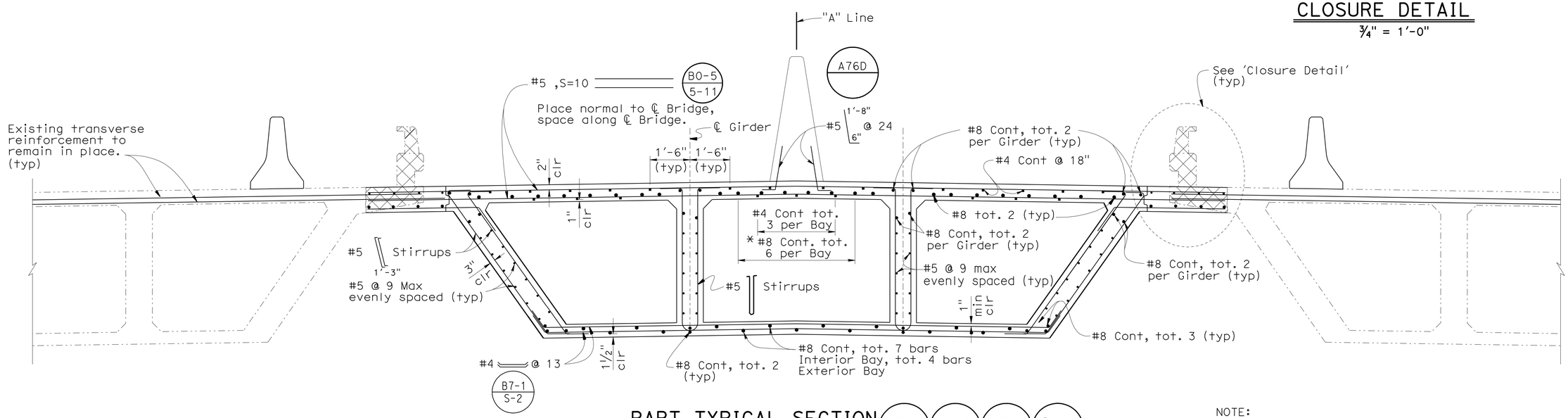

PART TYPICAL SECTION

A76D B8-5 B7-1 B0-5

½" = 1'-0"

NOTE:
For Stirrup spacing, see "GIRDER LAYOUT" sheet.

LEGEND:
* Indicates distribution reinforcement
Indicates Limits of Barrier Rail and Concrete Removal

NOTE:
THE CONTRACTOR SHALL VERIFY ALL CONTROLLING FIELD DIMENSIONS BEFORE ORDERING OR FABRICATING ANY MATERIAL.

	BY	CHECKED
DESIGN	J. M. Peterson	P. A. Peterson
DETAILS	JMP/T. Nguyen	P. A. Peterson
QUANTITIES	J. M. Peterson	P. A. Peterson

STATE OF CALIFORNIA
DEPARTMENT OF TRANSPORTATION

DIVISION OF ENGINEERING SERVICES
STRUCTURE DESIGN
DESIGN BRANCH 14

BRIDGE NO. 57-0746
POST MILE 8.85

ROUTE 805/54 SEPARATION (WIDEN)
TYPICAL SECTION

STRUCTURES DESIGN DETAIL SHEET (ENGLISH) (REV. 09-01-10)

ORIGINAL SCALE IN INCHES FOR REDUCED PLANS 0 1 2 3

UNIT: 3613
PROJECT NUMBER & PHASE: 11000200501
CONTRACT NO.: 11-2T1811

DISREGARD PRINTS BEARING EARLIER REVISION DATES

REVISION DATES: 05-17-11 05-19-11 05-25-11 06-16-11

SHEET 8 OF 19

FILE => e_57-0746rl-k-ts.dgn

USERNAME => s124496 DATE PLOTTED => 09-DEC-2011 TIME PLOTTED => 12:16

DIST	COUNTY	ROUTE	POST MILES TOTAL PROJECT	SHEET No.	TOTAL SHEETS
11	SD	54,805	1.8,5.5/9.4	584	635

Tony Skreslet
REGISTERED CIVIL ENGINEER 8-25-11 DATE

12-5-11
PLANS APPROVAL DATE

REGISTERED PROFESSIONAL ENGINEER TONY SKRESLET No. C50676 Exp. 09-30-11 CIVIL STATE OF CALIFORNIA

The State of California or its officers or agents shall not be responsible for the accuracy or completeness of electronic copies of this plan sheet.

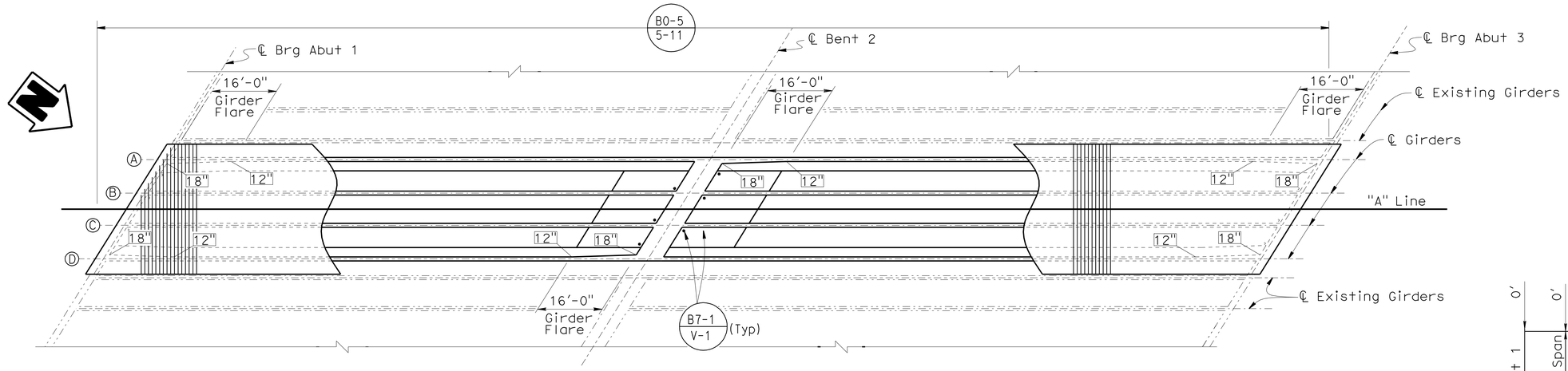

PLAN B7-6 D-1 B7-1

1" = 15'

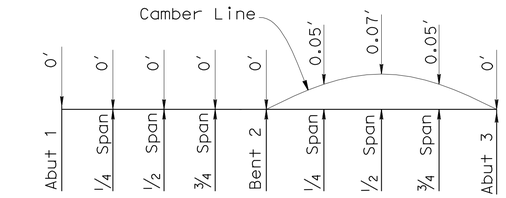

NOTE:
Does not include allowance for falsework settlement

CAMBER DIAGRAM

No Scale

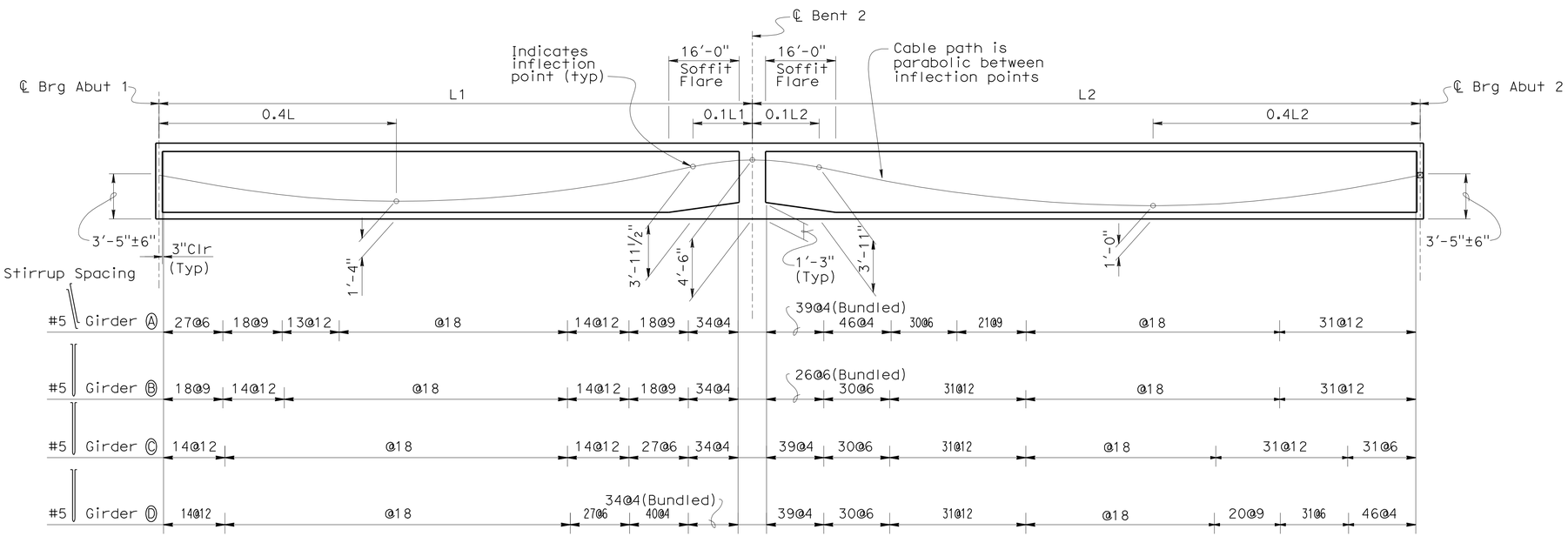

LONGITUDINAL SECTION B7-1 B8-5

No Scale

PRESTRESSING NOTES

270 KSI Low Relaxation Strand:

P_{jack} = 8450 kips

Anchor Set = 3/8 in

Total Number of Girders = 4

Distribution of prestress force (Pjack) between girders shall not exceed the ratio of 3:2. Maximum final force variation between girders shall not exceed 725 kips.

Concrete: f'_c = 5.0 ksi @ 28 days

f'_{ci} = 3.5 ksi @ time of stressing

Contractor shall submit elongation calculations based on initial stress at

⊠ = 0.8811 times jacking stress.

One end stressing shall be performed from the long-span end only.

NOTES:

1. "L" is the Girder length measured along ℄ Girder
2. Interior Girder Centerlines are straight between offsets shown.
3. Falsework shall be removed as soon as permitted by the specifications. Closure Pour shall not placed sooner than 60 days after the Falework has been released

LEGEND:

⊠ Indicates Theoretical Point of No Movement

Indicates Girder Stem width in inches measured at top of Girder, perpendicular to ℄ Girder

NOTE:
THE CONTRACTOR SHALL VERIFY ALL CONTROLLING FIELD DIMENSIONS BEFORE ORDERING OR FABRICATING ANY MATERIAL.

	BY	CHECKED
DESIGN	J. M. Peterson	P. A. Peterson
DETAILS	JMP/ T. Nguyen	P. A. Peterson
QUANTITIES	J. M. Peterson	P. A. Peterson

STATE OF CALIFORNIA
DEPARTMENT OF TRANSPORTATION

DIVISION OF ENGINEERING SERVICES
STRUCTURE DESIGN
DESIGN BRANCH X

BRIDGE NO. 57-0746
POST MILE 8.85

ROUTE 805/54 SEPARATION (WIDEN)
GIRDER LAYOUT

STRUCTURES DESIGN DETAIL SHEET (ENGLISH) (REV. 09-01-10)

ORIGINAL SCALE IN INCHES FOR REDUCED PLANS 0 1 2 3

UNIT: 3613
PROJECT NUMBER & PHASE: 11000200501
CONTRACT NO.: 11-2T1811

DISREGARD PRINTS BEARING EARLIER REVISION DATES

REVISION DATES 06-15-11 08-12-11 08-18-11 08-11-11

SHEET 9 OF 19

FILE => e_57-0746r1-1-gio.dgn

USERNAME => s124496 DATE PLOTTED => 09-DEC-2011 TIME PLOTTED => 12:16

DIST	COUNTY	ROUTE	POST MILES TOTAL PROJECT	SHEET No.	TOTAL SHEETS
11	SD	54,805	1.8,5.5/9.4	585	635

Tony Skreslet 8-25-11
REGISTERED CIVIL ENGINEER DATE

12-5-11
PLANS APPROVAL DATE

REGISTERED PROFESSIONAL ENGINEER TONY SKRESLET No. C50676 Exp. 09-30-11 CIVIL STATE OF CALIFORNIA

The State of California or its officers or agents shall not be responsible for the accuracy or completeness of electronic copies of this plan sheet.

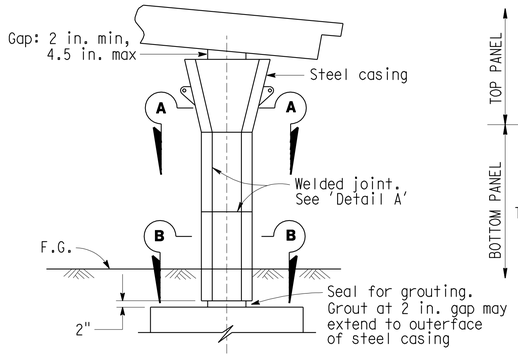

CLASS P/F COLUMN

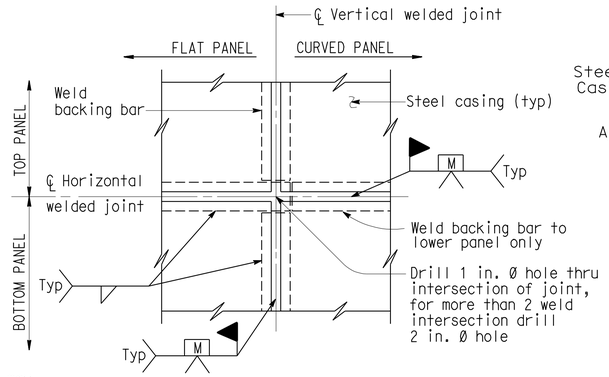

DETAIL A

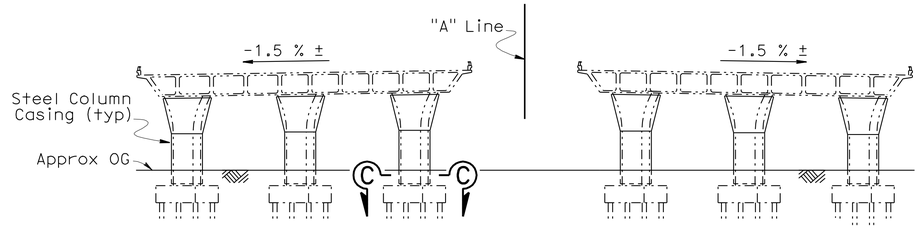

NOTE: Median widening not shown

TYPICAL SECTION

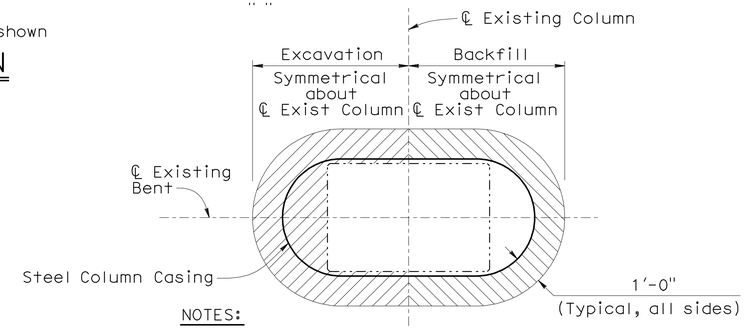

NOTES:

1. Section typical for all Existing Columns
2. Vertical Limits from Top of Footing to OG

SECTION C-C
EXCAVATION & BACKFILL LIMITS

Indicates Excavation Limits

Indicates Backfill Limits

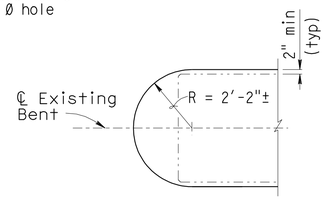

CASING DETAIL
CLASS F AND P/F COLUMN

Actual Radius to be determined by the Contractor subject to the approval of the Engineer

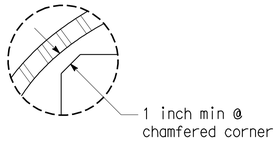

DETAIL B

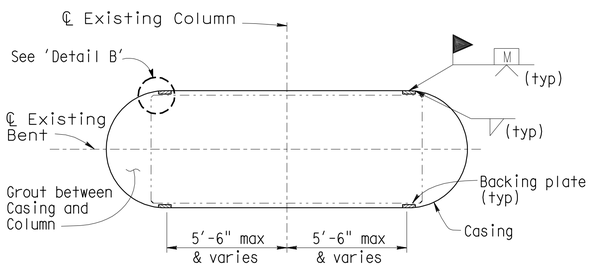

SECTION A-A
RECTANGULAR COLUMN

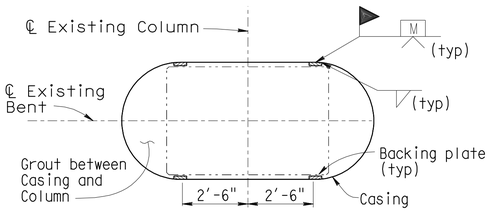

SECTION B-B
RECTANGULAR COLUMN

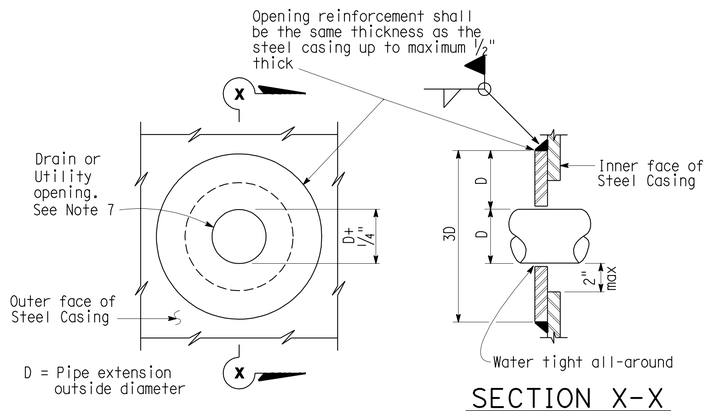

SECTION X-X

CASING OPENING

Note: Opening reinforcement required for drain or utility openings larger than 4 in.

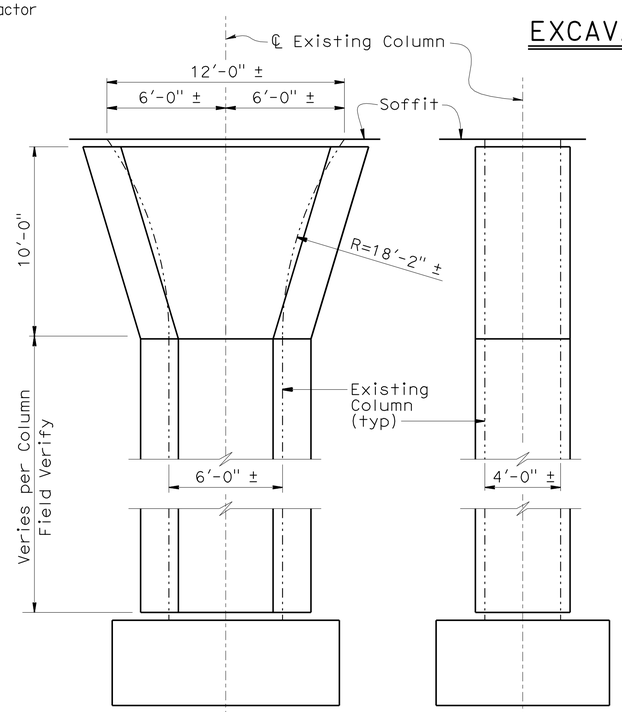

EXISTING COLUMNS TO BE CASED

NOTES:

1) For varying thickness steel casing inside surface to remain flush. Minimum clearance from PCC column to casing shall be maintained.
2) Appropriate injection nozzles to be provided on casing, but removed and ground flush following completion of grouting operation.
3) All voids between steel casing and polyethylene (Class P/F), and steel casing and PCC column (Class F) to be filled with grout.
4) Location and number of vertical and horizontal welds to be determined by the Contractor, and subject to the approval of the Engineer. The location of casing welds are for illustration. No skip welds allowed.
5) Circular steel casing to be 1/4" thick minimum for casings with a 4'-4" diameter or less; all other steel casings to be 3/8" thick unless noted differently on contract plans. Backing plates to be the same thickness as casing up to maximum 1/2" thick.
6) Waterproof limits for steel casings. Typical for Classe "F" and "P/F".
7) For pipe extensions, opening shall be no more than 1/4" greater than the pipe extension diameter. For other openings, the opening diameter to be determined by the Engineer.
6) Paint Casing to match colors of concrete

NOTE:
THE CONTRACTOR SHALL VERIFY ALL CONTROLLING FIELD DIMENSIONS BEFORE ORDERING OR FABRICATING ANY MATERIAL.

NO SCALE

	BY	CHECKED
DESIGN	J. M. Peterson	P. A. Peterson
DETAILS	JMP/T.Nguyen	P. A. Peterson
QUANTITIES	J. M. Peterson	P. A. Peterson

STATE OF CALIFORNIA
DEPARTMENT OF TRANSPORTATION

DIVISION OF ENGINEERING SERVICES
STRUCTURE DESIGN
DESIGN BRANCH 14

BRIDGE NO. 57-0746
POST MILE 8.85

ROUTE 805/54 SEPARATION (WIDEN)
STEEL COLUMN CASING SEISMIC RETROFIT)

STRUCTURES DESIGN DETAIL SHEET (ENGLISH) (REV. 09-01-10)

ORIGINAL SCALE IN INCHES FOR REDUCED PLANS 0 1 2 3

UNIT: 3613
PROJECT NUMBER & PHASE: 11000200501
CONTRACT NO.: 11-2T1811

DISREGARD PRINTS BEARING EARLIER REVISION DATES

REVISION DATES: 2-10-11 04-07-11 04-11-11 07-15-11

SHEET 10 OF 19

FILE => e_57-0746rl-m-scc.dgn

USERNAME => s124496 DATE PLOTTED => 09-DEC-2011 TIME PLOTTED => 12:16

DIST.	COUNTY	ROUTE	POST MILES TOTAL PROJECT	SHEET NO.	TOTAL SHEETS
11	SD	54,805	1.8,5.5/9.4	586	635

Tony Skreslet 8-25-11
REGISTERED ENGINEER - CIVIL

12-5-11
PLANS APPROVAL DATE

REGISTERED PROFESSIONAL ENGINEER TONY SKRESLET No. C50676 Exp. 09-30-11 CIVIL STATE OF CALIFORNIA

The State of California or its officers or agents shall not be responsible for the accuracy or completeness of electronic copies of this plan sheet.

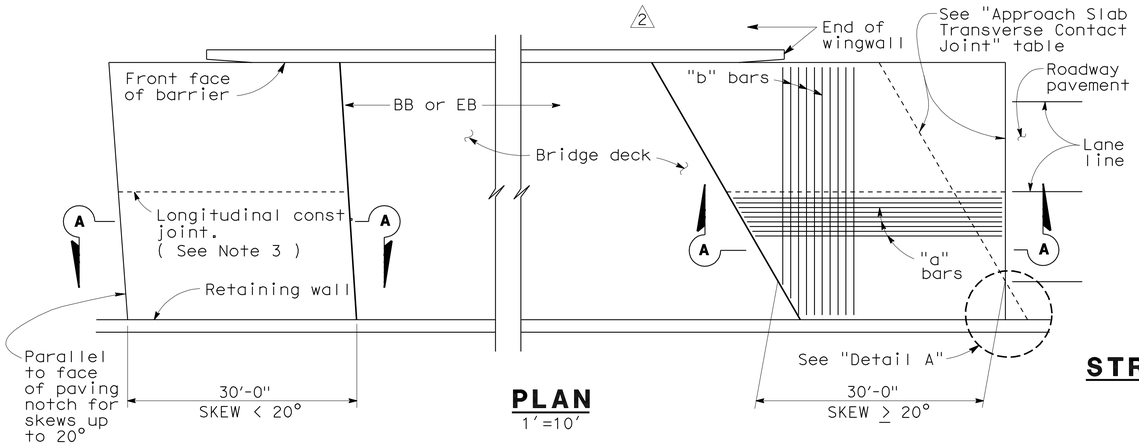

PLAN
1'=10'

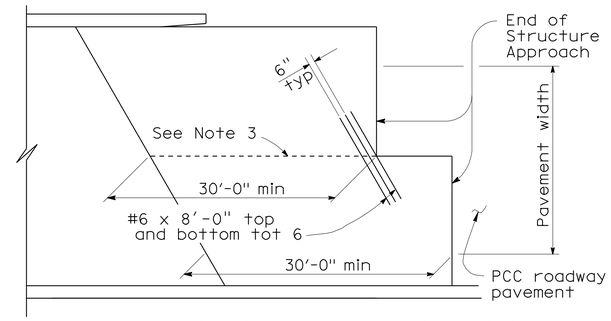

STRUCTURE APPROACH - END STAGGER DETAIL
No Scale

APPROACH SLAB TRANSVERSE CONTACT JOINT		
APPROACH SKEW	WITH AC ROADWAY PAVEMENT	WITH PCC ROADWAY PAVEMENT
< 20°	Parallel to face of paving notch	Parallel to face of paving notch
20°- 45°	Parallel to face of P N use (Detail A)	Stagger lines 24' to 36' apart
> 45°	Parallel to face of P N use (Detail A)	Stagger at each lane line

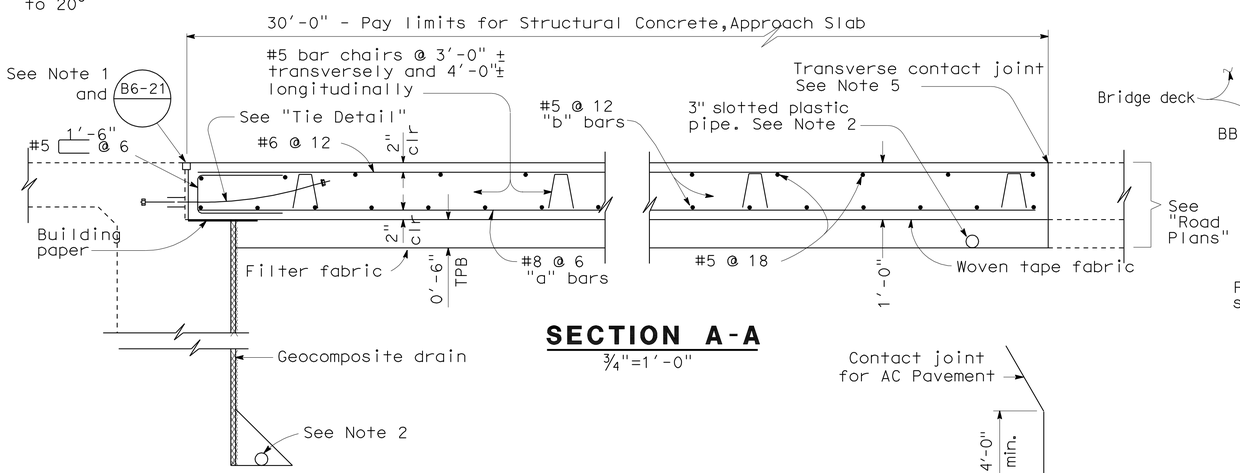

SECTION A-A
¾"=1'-0"

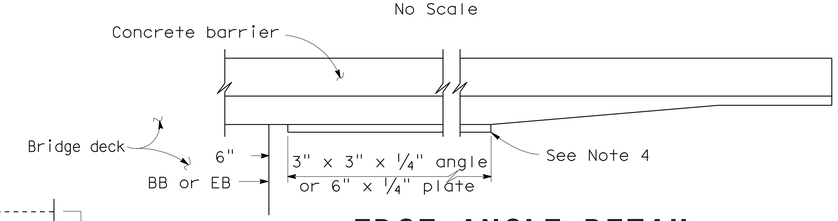

EDGE ANGLE DETAIL
½"=1'-0"

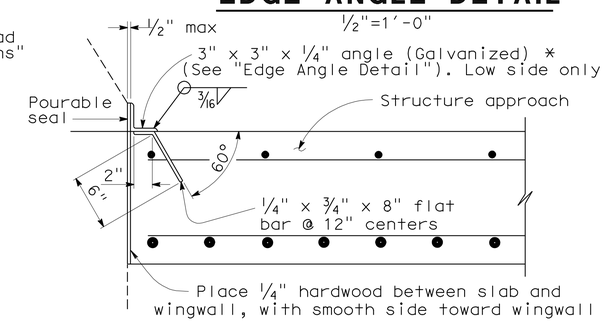

*(TO BE USED WITH TYPE 25 OR TYPE 27 CONCRETE BARRIER)

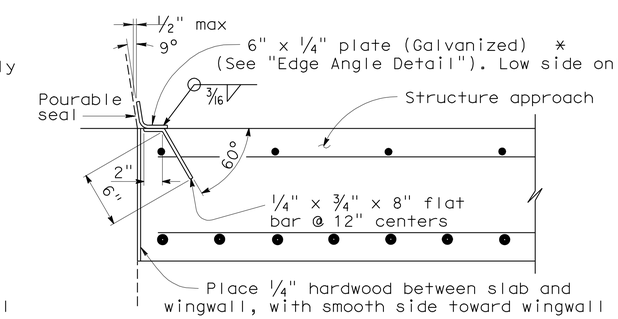

*(TO BE USED WITH TYPE 732 OR TYPE 736 CONCRETE BARRIER)

DETAIL B
1½"=1'-0"

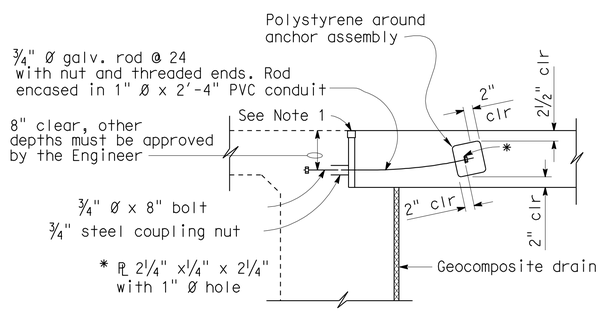

DETAIL A
No Scale

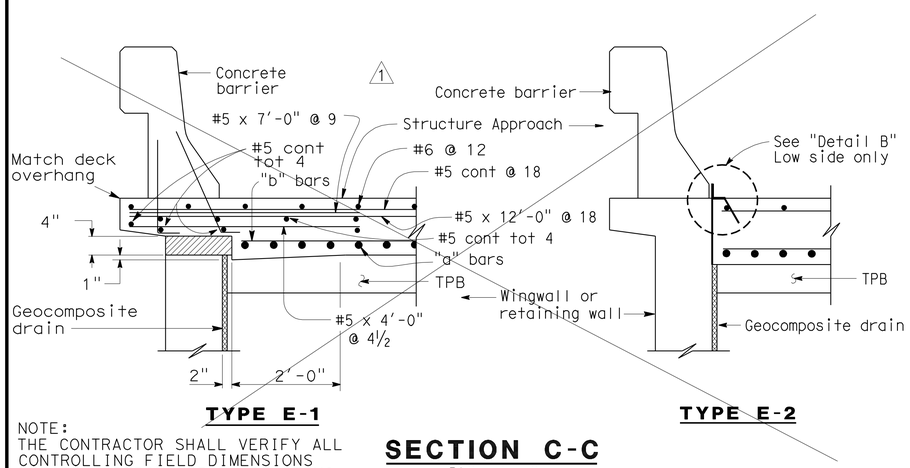

TYPE E-1 TYPE E-2

SECTION C-C
¾"=1'-0"

NOTE:
THE CONTRACTOR SHALL VERIFY ALL CONTROLLING FIELD DIMENSIONS BEFORE ORDERING OR FABRICATING ANY MATERIAL.

(Type E-1 to be used,unless otherwise shown on plans)

TIE DETAIL
¾"=1'-0"

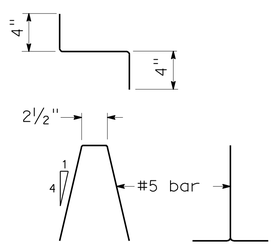

BAR CHAIR DETAIL
1½"=1'-0"

NOTES:

1. For details not noted or shown,see Structure Plans.
2. For drainage details,see "Structure Approach Drainage Details" sheet.
3. Longitudinal construction joints,when permitted by the Engineer,shall be located on lane lines.
4. End angle or plate at beginning of barrier transition, end of wingwall or end of structure approach, as applicable.
5. For transverse contact joint with new PCC paving, refer to Standard Plan P10.
6. At the contractor's option,approach slab transverse reinforcement may be placed parallel to paving notch. Spacing of transverse reinforcement is measured along ℄ roadway.

Polystyrene to be removed.

STANDARD DRAWING

FILE NO. xs3-180e

APPROVED BY M. Ha RESPONSIBLE TECHNICAL SPECIALIST
APPROVAL DATE 8-12-08

RELEASED BY O. Alcantara RESPONSIBLE OFFICE CHIEF
RELEASE DATE 8-12-08

1 Deleted Detail
2 Modified Detail

STATE OF CALIFORNIA DEPARTMENT OF TRANSPORTATION

DIVISION OF ENGINEERING SERVICES

BRIDGE NO. 57-0746
POST MILE 8.85

ROUTE 805/54 SEPARATION (WIDEN)
STRUCTURE APPROACH TYPE N(30D)

DS OSD 2147A (ENGLISH STANDARD DRAWING "XS" BORDER REV. 01/11/08)

ORIGINAL SCALE IN INCHES FOR REDUCED PLANS 0 1 2 3

CU 3613
PN & PHASE 11000200501

DISREGARD PRINTS BEARING EARLIER REVISION DATES

REVISION DATES (PRELIMINARY STAGE ONLY) 01-27-11 04-07-11 04-11-11

SHEET 11 OF 19

USERNAME => s124496

e_57-0746rl-r-sapptyp_n.dgn

DATE PLOTTED => 09-DEC-2011 TIME PLOTTED => 12:16

DIST.	COUNTY	ROUTE	MILE POST TOTAL PROJECT	SHEET NO.	TOTAL SHEETS
11	SD	54,805	1.8,5.5/9.4	587	635

Tony Skreslet 8-25-11
REGISTERED ENGINEER - CIVIL

12-5-11
PLANS APPROVAL DATE

REGISTERED PROFESSIONAL ENGINEER TONY SKRESLET No. C50676 Exp. 09-30-11 CIVIL STATE OF CALIFORNIA

The State of California or its officers or agents shall not be responsible for the accuracy or completeness of electronic copies of this plan sheet.

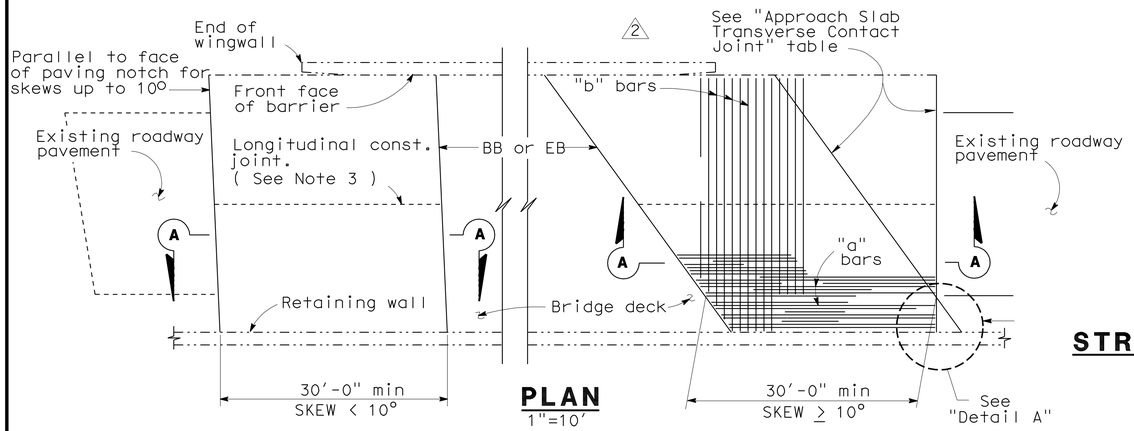

PLAN
1"=10'

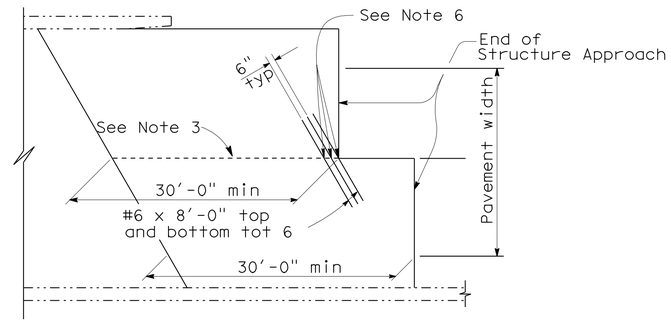

STRUCTURE APPROACH - END STAGGER DETAIL
No Scale

APPROACH SLAB TRANSVERSE CONTACT JOINT		
APPROACH SKEW	WITH AC ROADWAY PAVEMENT	WITH PCC ROADWAY PAVEMENT
< 10°	Parallel to face of paving notch	Parallel to face of paving notch
10° - 45°	Parallel to face of P N use (Detail A)	Stagger lines 24' to 36' apart
> 45°	Parallel to face of P N use (Detail A)	Stagger at each lane line

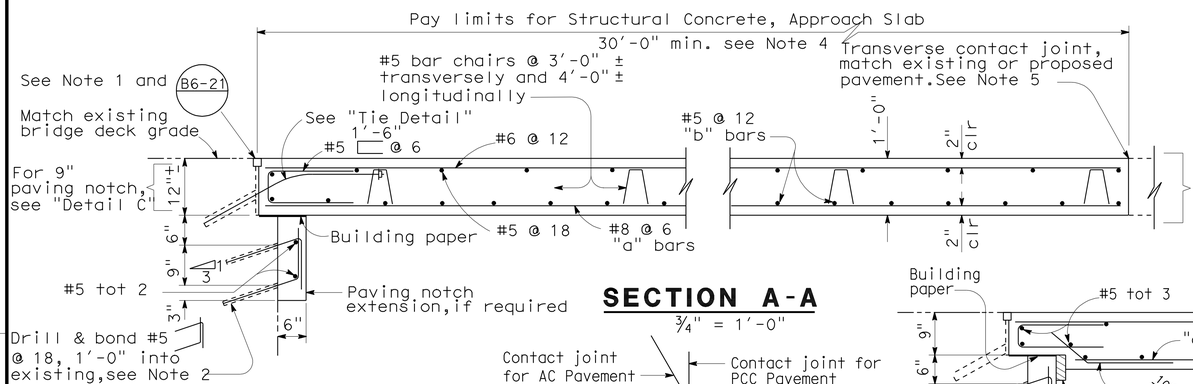

SECTION A-A
¾" = 1'-0"

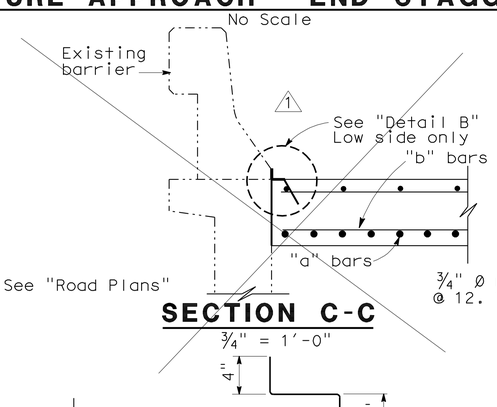

SECTION C-C
¾" = 1'-0"

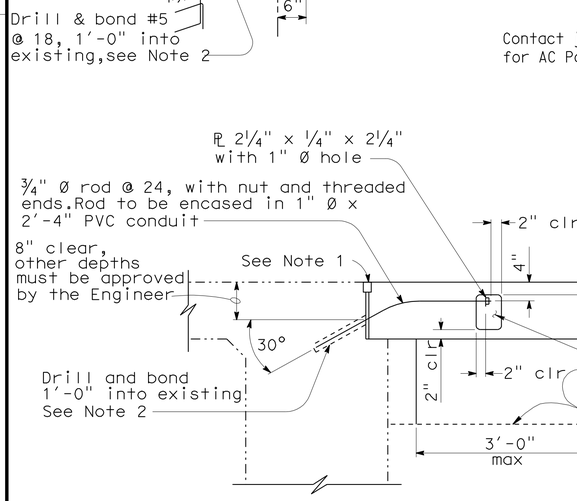

DETAIL A
No Scale

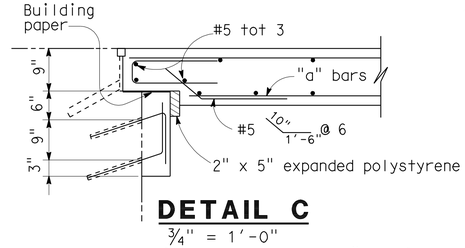

DETAIL C
¾" = 1'-0"

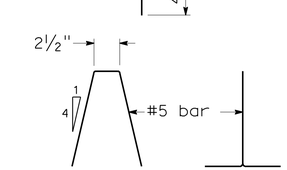

BAR CHAIR DETAIL
1½" = 1'-0"

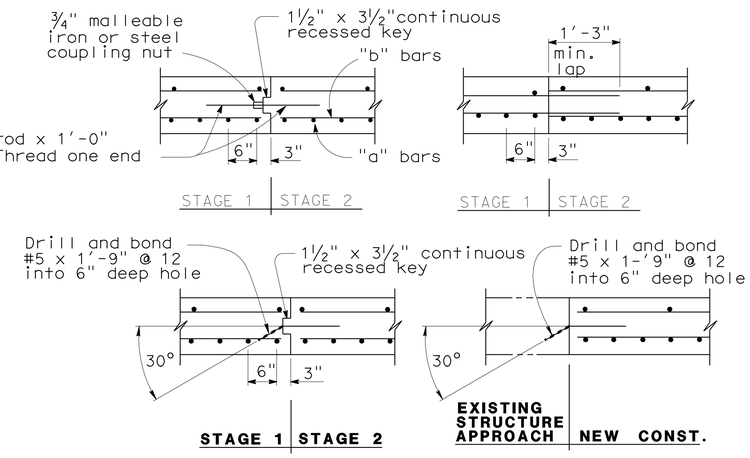

LONGITUDINAL CONSTRUCTION JOINT ALTERNATIVES
¾" = 1'-0"

NOTES:

1. For details not shown or noted, see Structure Plans. Adjust bar reinforcement to clear a sawcut for sealed joint, when required.
2. Space to avoid existing prestress anchorages and main reinforcement.
3. Longitudinal construction joints, when permitted by the Engineer, shall be located on lane lines.
4. Transverse contact joint shall be a minimum of 5'-0" from an existing or constructed weakened plane joint.
5. For transverse contact joint with new PCC paving, refer to Standard Plan P10.
6. Couplers are required for stage construction.
7. End angle or plate at beginning of barrier transition, end of wingwall or end of structure approach as applicable.

TIE DETAIL
¾" = 1'-0"

NOTE:
THE CONTRACTOR SHALL VERIFY ALL CONTROLLING FIELD DIMENSIONS BEFORE ORDERING OR FABRICATING ANY MATERIAL.

NOTE: For details not shown, see "Section A-A".

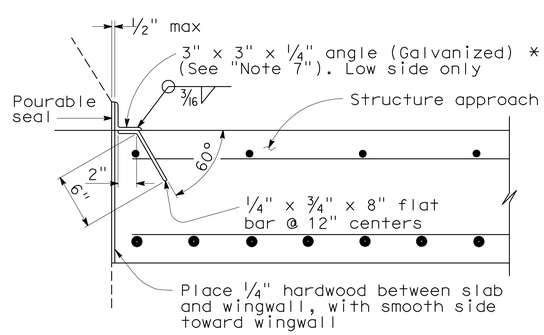

*(TO BE USED WITH TYPE 25 OR TYPE 27 CONCRETE BARRIER)

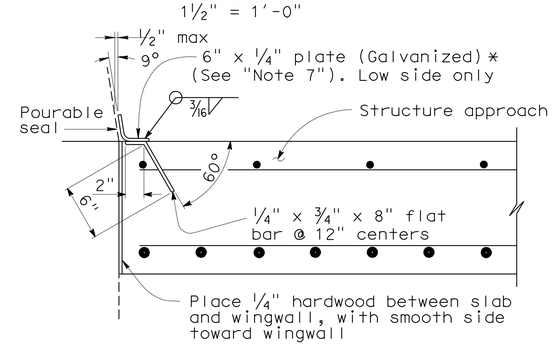

*(TO BE USED WITH TYPE 732 OR TYPE 736 CONCRETE BARRIER)

DETAIL B
1½" = 1'-0"

STANDARD DRAWING				
RELEASE DATE 3/14/05	DESIGN	BY M.TRAFFALIS	CHECKED E.THORKILDSEN	RELEASED BY
FILE NO. xs3-140e	DETAILS	BY R.YEE	CHECKED E.THORKILDSEN	
	SUBMITTED	BY M.HA	DRAWING DATE 8/92	OFFICE CHIEF

1 Deleted Detail
2 Modified Detail

STATE OF CALIFORNIA
DEPARTMENT OF TRANSPORTATION

DIVISION OF ENGINEERING SERVICES

BRIDGE NO. 57-0746
MILE POST 8.85

ROUTE 805/54 SEPARATION (WIDEN)
STRUCTURE APPROACH TYPE R(30D)

DS OSD 2147A (ENGLISH) (REV. X/XX/XX)

ORIGINAL SCALE IN INCHES FOR REDUCED PLANS 0 1 2 3

CU 3613
PN & PHASE 11000200501

DISREGARD PRINTS BEARING EARLIER REVISION DATES
REVISION DATES (PRELIMINARY STAGE ONLY) 1-27-11 4-07-11 4-11-11

SHEET 12 OF 19

USERNAME => s124496

DATE PLOTTED => 09-DEC-2011 TIME PLOTTED => 12:17

e_57-0746rl-s-sapp

DIST	COUNTY	ROUTE	POST MILES TOTAL PROJECT	SHEET No.	TOTAL SHEETS
11	SD	54,805	1.8,5.5/9.4	588	635

Tony Skreslet 8-25-11
REGISTERED CIVIL ENGINEER DATE

12-5-11
PLANS APPROVAL DATE

REGISTERED PROFESSIONAL ENGINEER TONY SKRESLET No. C50676 Exp. 09-30-11 CIVIL STATE OF CALIFORNIA

The State of California or its officers or agents shall not be responsible for the accuracy or completeness of electronic copies of this plan sheet.

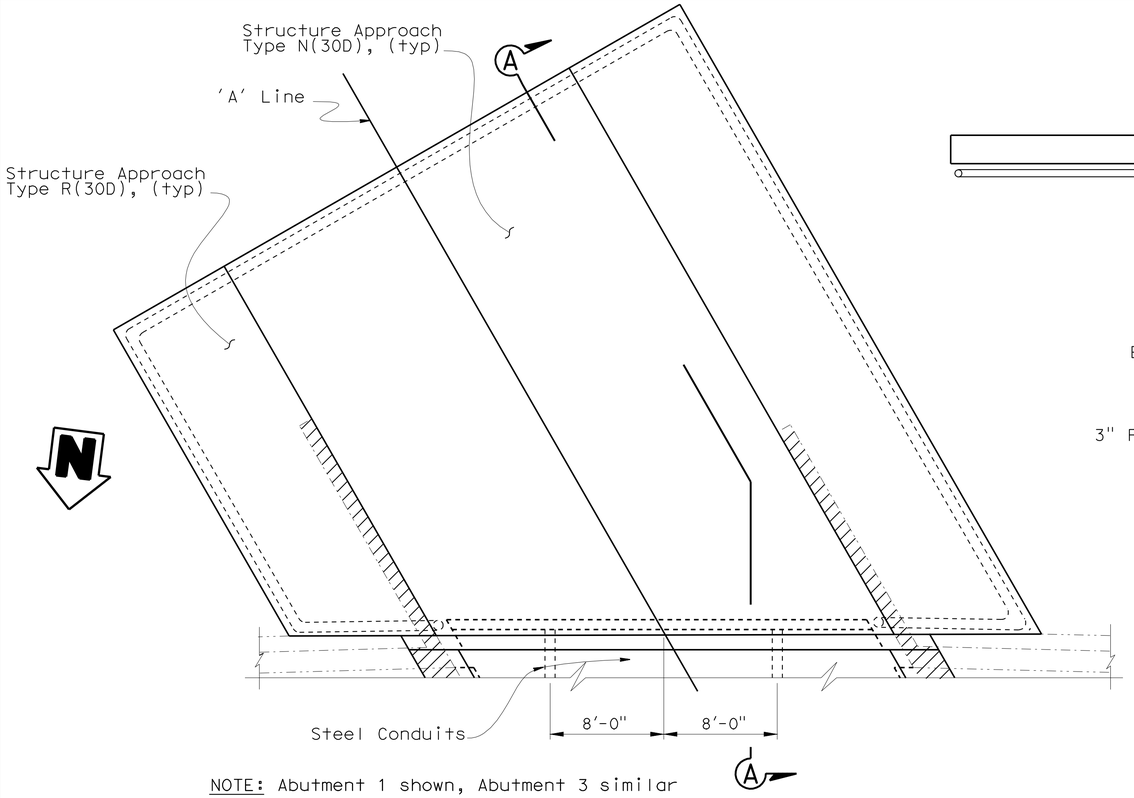

NOTE: Abutment 1 shown, Abutment 3 similar

PLAN
No Scale

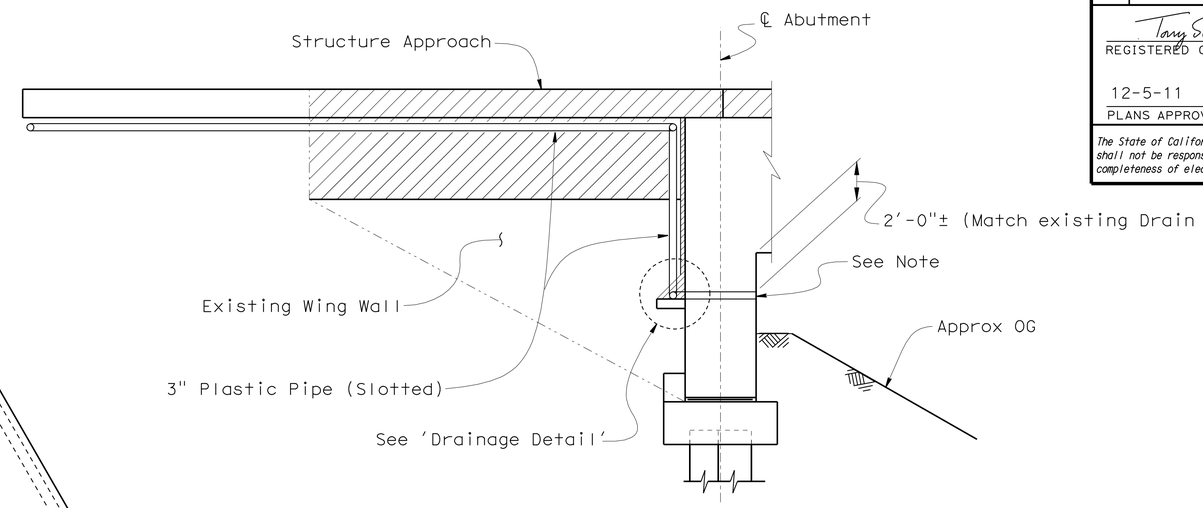

SECTION A-A
No Scale

NOTE: 6" square aluminum or galvanized steel wire ½" mesh hardware cloth, minimum diameter 0.025". Anchor firmly to Abutment face

LEGEND:

Indicates top 3' of Wing Wall and portion of Abutment and Overhang to be removed

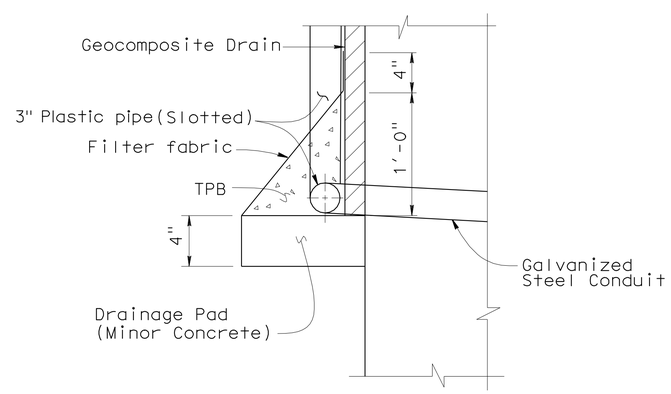

DRAINAGE DETAIL
No Scale

NOTE:
THE CONTRACTOR SHALL VERIFY ALL CONTROLLING FIELD DIMENSIONS BEFORE ORDERING OR FABRICATING ANY MATERIAL.

	BY	CHECKED
DESIGN	J. M. Peterson	P. A. Peterson
DETAILS	JMP/T. Nguyen	P. A. Peterson
QUANTITIES	J. M. Peterson	P. A. Peterson

STATE OF CALIFORNIA
DEPARTMENT OF TRANSPORTATION

DIVISION OF ENGINEERING SERVICES
STRUCTURE DESIGN
DESIGN BRANCH 14

BRIDGE NO. 57-0746
POST MILE 8.85

ROUTE 805/54 SEPARATION (WIDEN)
STRUCTURE APPROACH DRAINAGE DETAILS

STRUCTURES DESIGN DETAIL SHEET (ENGLISH) (REV. 09-01-10)

ORIGINAL SCALE IN INCHES FOR REDUCED PLANS 0 1 2 3

UNIT: 3613
PROJECT NUMBER & PHASE: 11000200501
CONTRACT NO.: 11-2T1811

DISREGARD PRINTS BEARING EARLIER REVISION DATES

REVISION DATES: 06-25-11 09-16-11 09-21-11 06-14-11

SHEET 13 OF 19

FILE => e_57-0746rl-s-ssadd.dgn

USERNAME => s124496 DATE PLOTTED => 09-DEC-2011 TIME PLOTTED => 12:17

DIST	COUNTY	ROUTE	POST MILES TOTAL PROJECT	SHEET No.	TOTAL SHEETS
11	SD	54,805	1.8,5.5/9.4	589	635

Tony Skreslet 8-25-11
REGISTERED CIVIL ENGINEER DATE

12-5-11
PLANS APPROVAL DATE

REGISTERED PROFESSIONAL ENGINEER TONY SKRESLET No. C50676 Exp. 09-30-11 CIVIL STATE OF CALIFORNIA

The State of California or its officers or agents shall not be responsible for the accuracy or completeness of electronic copies of this plan sheet.

LEGEND:

Indicates Existing Structure

Indicates Drain Pipe, see "Road Plans"

NOTES:

1. Drown Drains required at Abutment 1 only, total 2
   All steel pipe to be 10" x 0.134" wall thickness and shall be galvanized. Fittings and bends shall have a minimum wall thickness of 1/8". All joints or connections to be connected by a steel pipe sleeve and to be smooth throughout inside of pipe except as noted. All bends to be 2" radius measured along centerline of pipe. All bends to be smooth
2. For Drainage Details not shown see Standard Plan, DECK DRAINS TYPES D-1 AND D-2
3. All metal to be hot dipped galvanized after fabricating

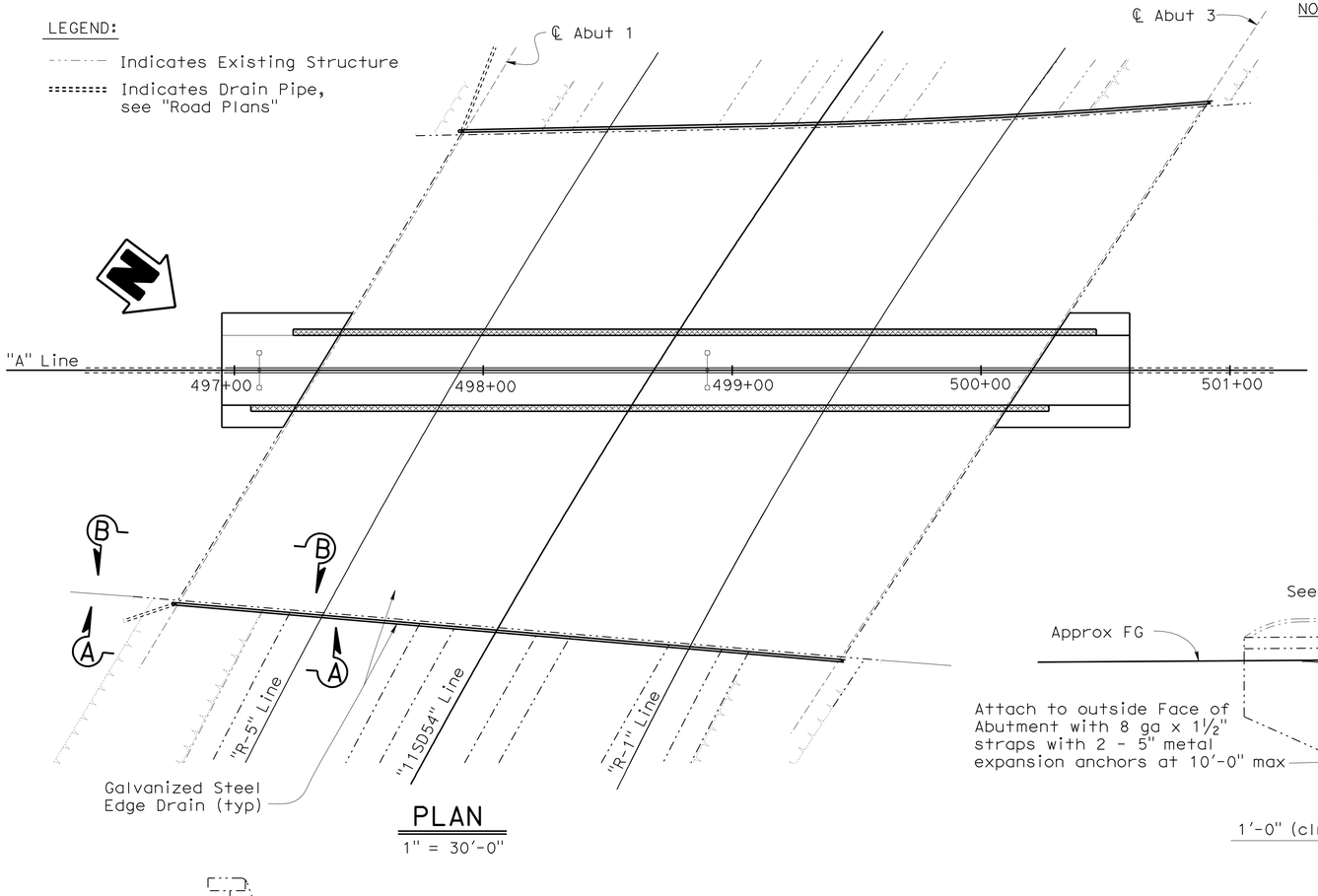

PLAN

1" = 30'-0"

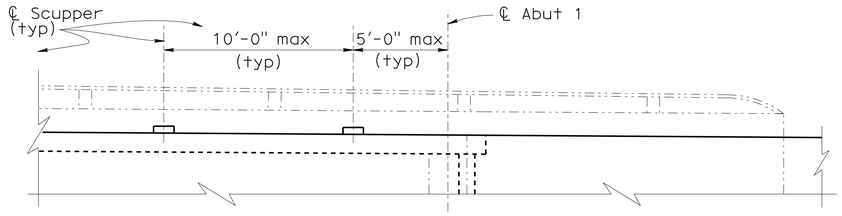

SECTION B-B

1/4" = 1'-0"

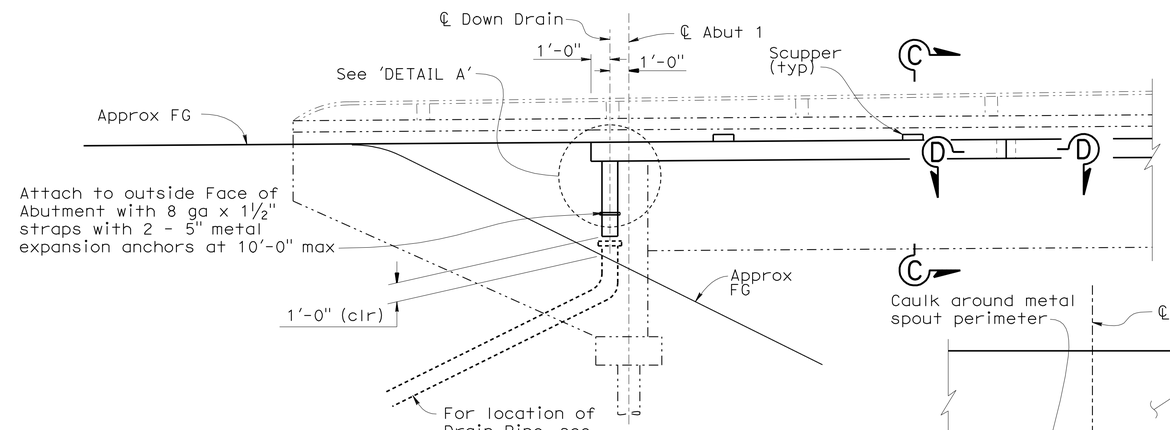

VIEW A-A

1/4" = 1'-0"

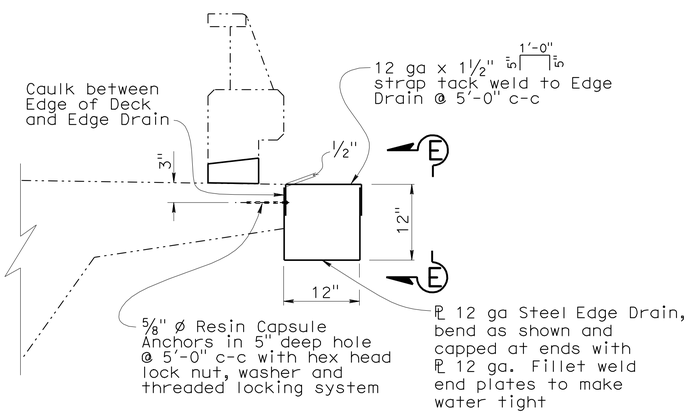

SECTION C-C

1" = 1'-0"

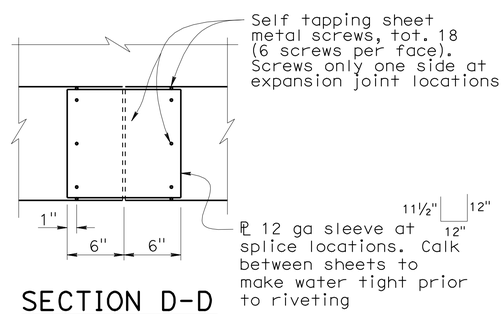

SECTION D-D

1 1/2" = 1'-0"

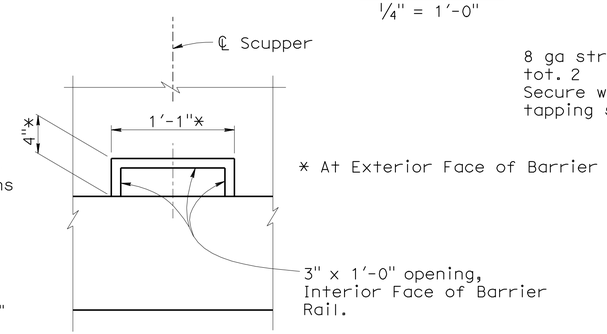

VIEW E-E

1 1/2" = 1'-0"

Note:
Sawcut and remove existing concrete and reinforcement within limits of Scupper Opening

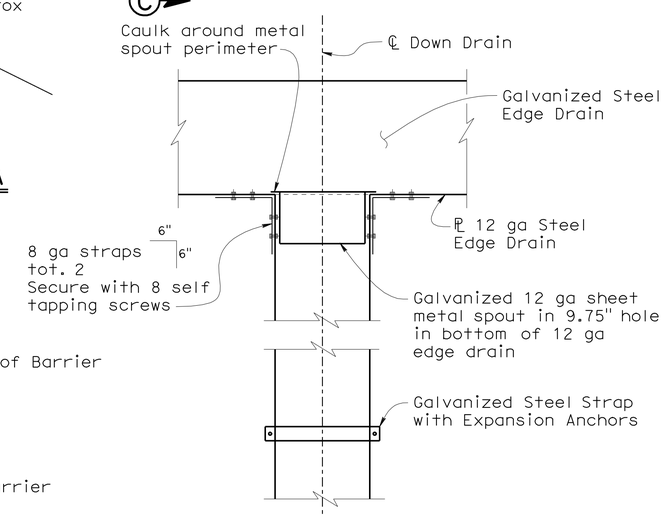

DETAIL A

1 1/2" = 1'-0"

NOTE:
THE CONTRACTOR SHALL VERIFY ALL CONTROLLING FIELD DIMENSIONS BEFORE ORDERING OR FABRICATING ANY MATERIAL.

	BY	CHECKED
DESIGN	T. Skreslet	K. C. Liu
DETAILS	K. Kubo	K. C. Liu
QUANTITIES	J. M. Peterson	P. A. Peterson

STATE OF CALIFORNIA
DEPARTMENT OF TRANSPORTATION

DIVISION OF ENGINEERING SERVICES
STRUCTURE DESIGN
DESIGN BRANCH 14

BRIDGE NO. 57-0746
POST MILE 8.85

ROUTE 805/54 SEPARATION (WIDEN)
MISCELLANEOUS DETAILS NO. 1

STRUCTURES DESIGN DETAIL SHEET (ENGLISH) (REV. 09-01-10)

ORIGINAL SCALE IN INCHES FOR REDUCED PLANS 0 1 2 3

UNIT: 3613
PROJECT NUMBER & PHASE: 11000200501
CONTRACT NO.: 11-2T1811

DISREGARD PRINTS BEARING EARLIER REVISION DATES

REVISION DATES 08-22-11 08-23-11 08-25-11 08-12-11

SHEET 14 OF 19

FILE => e_57-0746ri-u-miscdetnot.dgn

USERNAME => s124496 DATE PLOTTED => 09-DEC-2011 TIME PLOTTED => 12:17

DIST	COUNTY	ROUTE	POST MILES TOTAL PROJECT	SHEET No.	TOTAL SHEETS
11	SD	54,805	1.8,5.5/9.4	590	635

Tony Skreslet 8-25-11
REGISTERED CIVIL ENGINEER DATE

12-5-11
PLANS APPROVAL DATE

REGISTERED PROFESSIONAL ENGINEER TONY SKRESLET No. C50676 Exp. 09-30-11 CIVIL STATE OF CALIFORNIA

The State of California or its officers or agents shall not be responsible for the accuracy or completeness of electronic copies of this plan sheet.

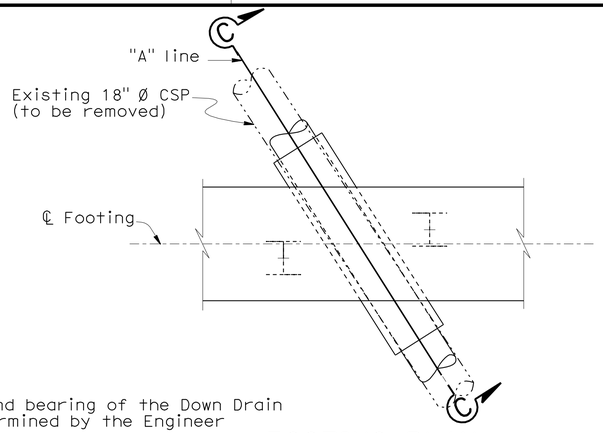

NOTE:
Location and bearing of the Down Drain to be determined by the Engineer

FOOTING PLAN
No Scale

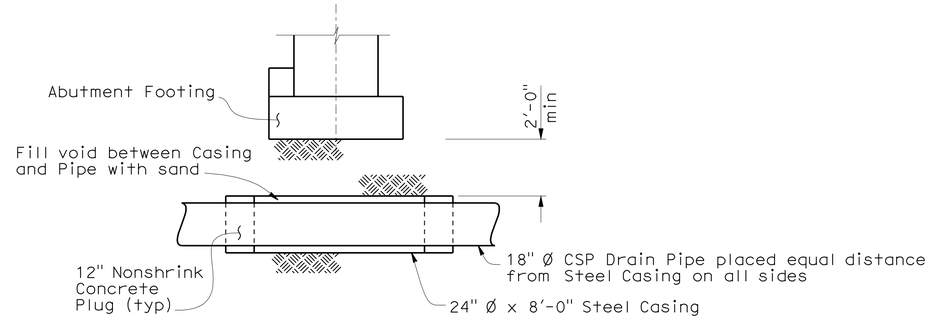

SECTION C-C
No Scale

ABUTMENT 3 DOWN DRAIN DETAILS

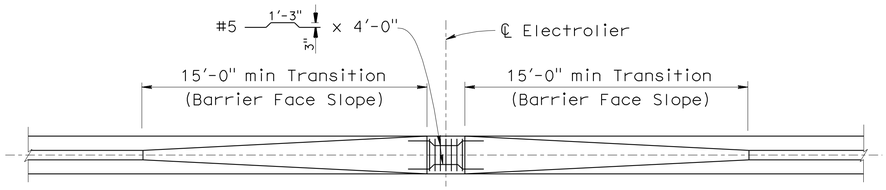

NOTE: Electrolier and Base Plate not shown

PLAN
1/4" = 1'-0"

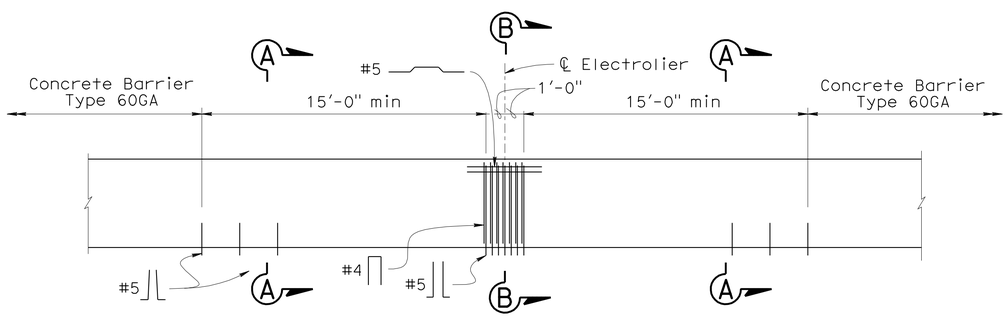

ELEVATION
1/4" = 1'-0"
A76D

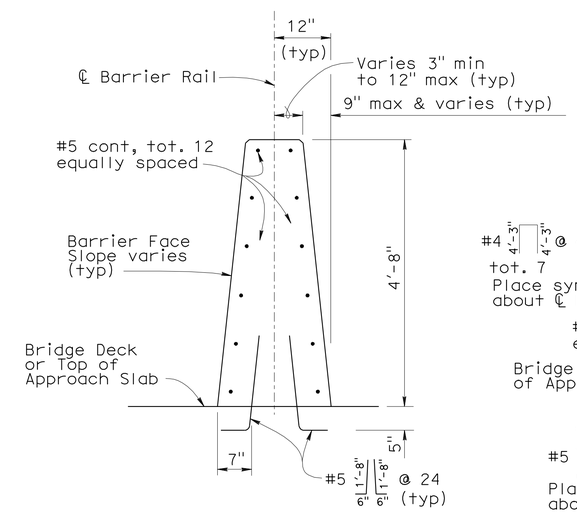

SECTION A-A
3/4" = 1'-0"

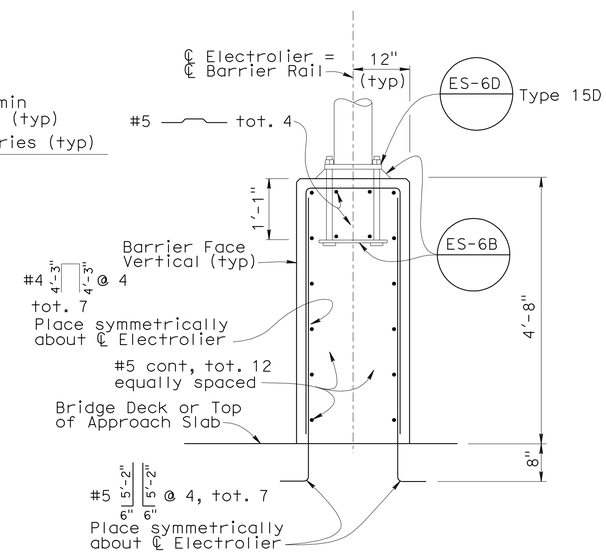

SECTION B-B
3/4" = 1'-0"

NOTE:
THE CONTRACTOR SHALL VERIFY ALL CONTROLLING FIELD DIMENSIONS BEFORE ORDERING OR FABRICATING ANY MATERIAL.

ELECTROLIER/CONCRETE BARRIER TYPE 60GA MODIFIED DETAILS

	BY	CHECKED
DESIGN	T. Skreslet	K. C. Liu
DETAILS	L. Xiong	K. C. Liu
QUANTITIES	J. M. Peterson	P. A. Peterson

STATE OF CALIFORNIA
DEPARTMENT OF TRANSPORTATION

DIVISION OF ENGINEERING SERVICES
STRUCTURE DESIGN
DESIGN BRANCH 14

BRIDGE NO. 57-0746
POST MILE 8.85

ROUTE 805/54 SEPARATION (WIDEN)
MISCELLANEOUS DETAILS NO. 2

STRUCTURES DESIGN DETAIL SHEET (ENGLISH) (REV. 09-01-10)

ORIGINAL SCALE IN INCHES FOR REDUCED PLANS 0 1 2 3

UNIT: 3613
PROJECT NUMBER & PHASE: 11000200501
CONTRACT NO.: 11-2T1811

DISREGARD PRINTS BEARING EARLIER REVISION DATES

REVISION DATES: 08-16-11 07-26-11 08-03-11 08-04-11

SHEET 15 OF 19

FILE => e_57-0746rl-u-miscdetno2.dgn

USERNAME => s124496 DATE PLOTTED => 09-DEC-2011 TIME PLOTTED => 12:17

DIST	COUNTY	ROUTE	POST MILES TOTAL PROJECT	SHEET No	TOTAL SHEETS
11	SD	54,805	1.8,5.5/9.4	591	635

REGISTERED CIVIL ENGINEER 8-1-11

12-5-11
PLANS APPROVAL DATE

REGISTERED PROFESSIONAL ENGINEER David T-M Liao No. C59838 Exp. 12-31-11 CIVIL STATE OF CALIFORNIA

The State of California or its officers or agents shall not be responsible for the accuracy or completeness of electronic copies of this plan sheet.

This LOTB sheet was prepared in accordance with the Caltrans Soil & Rock Logging, Classification, & Presentation Manual (June 2007).

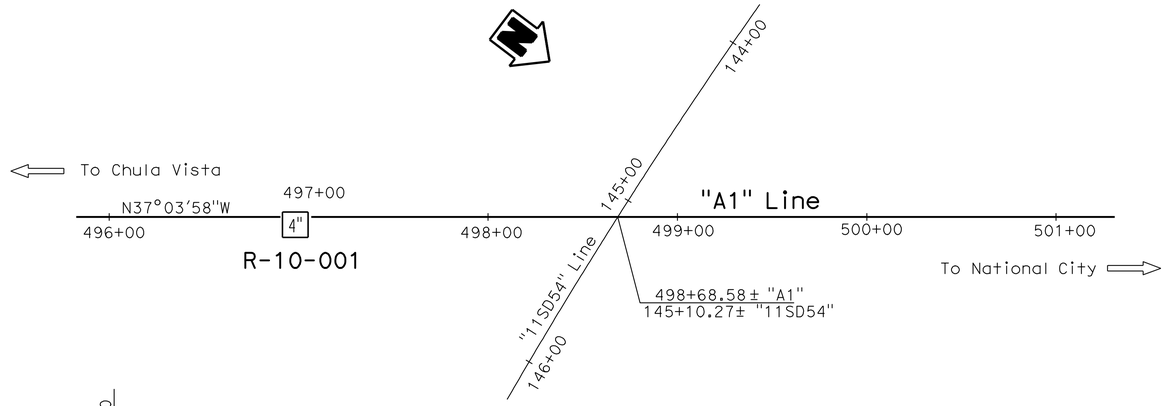

PLAN
1" = 40'

BENCH MARK

WP 495+00, point on centerline of I-805
in median, at Station 495+00 on "A1" Line
Elev : 66.61'
NAVD88 (Vertical)
NAD83 (Horizontal)

Note: Ground water was encountered during the April 2010 field investigation in Boring R-10-001.

PROFILE
Horiz: 1" = 10'
Vert: 1" = 10'

ENGINEERING SERVICES	MATERIALS AND GEOTECHNICAL SERVICES	STATE OF CALIFORNIA DEPARTMENT OF TRANSPORTATION	DIVISION OF ENGINEERING SERVICES STRUCTURE DESIGN DESIGN BRANCH X	BRIDGE NO. 57-0746 POST MILE 8.85	805/54 SEPARATION (WIDEN) LOG OF TEST BORINGS 1 OF 4
FUNCTIONAL SUPERVISOR NAME: M. DeSalvatore	DRAWN BY: F. Nguyen 11/10 CHECKED BY: E. Neupert	FIELD INVESTIGATION BY: J. Klamecki			

OGS CIVIL LOG OF TEST BORINGS SHEET

ORIGINAL SCALE IN INCHES FOR REDUCED PLANS 0 1 2 3

UNIT: 3643
PROJECT NUMBER & PHASE: 11000200501 CONTRACT NO.: 11-2T1811

DISREGARD PRINTS BEARING EARLIER REVISION DATES → REVISION DATES 07-21-11 07-26-11 08-03-11 07-08-11 SHEET 16 OF 19

FILE => e_57-0746rl-z-lotb_1of4.dgn

USERNAME => s124496 DATE PLOTTED => 09-DEC-2011 TIME PLOTTED => 12:17

DIST	COUNTY	ROUTE	POST MILES TOTAL PROJECT	SHEET No	TOTAL SHEETS
11	SD	54,805	1.8,5.5/9.4	592	635

REGISTERED CIVIL ENGINEER 8-1-11

12-5-11
PLANS APPROVAL DATE

The State of California or its officers or agents shall not be responsible for the accuracy or completeness of electronic copies of this plan sheet.

REGISTERED PROFESSIONAL ENGINEER David T-M Liao No. C59838 Exp. 12-31-11 CIVIL STATE OF CALIFORNIA

REFERENCE: CALTRANS SOIL & ROCK LOGGING, CLASSIFICATION, AND PRESENTATION MANUAL (JUNE 2007)

CEMENTATION

Description	Criteria
Weak	Crumbles or breaks with handling or little finger pressure.
Moderate	Crumbles or breaks with considerable finger pressure.
Strong	Will not crumble or break with finger pressure.

CONSISTENCY OF COHESIVE SOILS

Description	Unconfined Compressive Strength (tsf)	Pocket Penetrometer Measurement (tsf)	Torvane Measurement (tsf)	Field Approximation
Very Soft	< 0.25	< 0.25	< 0.12	Easily penetrated several inches by fist
Soft	0.25 to 0.50	0.25 to 0.50	0.12 to 0.25	Easily penetrated several inches by thumb
Medium Stiff	0.50 to 1.0	0.50 to 1.0	0.25 to 0.50	Penetrated several inches by thumb with moderate effort
Stiff	1 to 2	1 to 2	0.50 to 1.0	Readily indented by thumb but penetrated only with great effort
Very Stiff	2 to 4	2 to 4	1.0 to 2.0	Readily indented by thumbnail
Hard	> 4.0	> 4.0	> 2.0	Indented by thumbnail with difficulty

BOREHOLE IDENTIFICATION

Symbol	Hole Type	Description
Size	A	Auger Boring
Size	R P	Rotary drilled boring Rotary percussion boring (air)
Size	R	Rotary drilled diamond core
Size	HD HA	Hand driven (1-inch soil tube) Hand Auger
●	D	Dynamic Cone Penetration Boring
▲	CPT	Cone Penetration Test (ASTM D 5778-95)
⬚	O	Other

Note: Size in inches.

PLASTICITY OF FINE-GRAINED SOILS

Description	Criteria
Nonplastic	A 1/8-inch thread cannot be rolled at any water content.
Low	The thread can barely be rolled and the lump cannot be formed when drier than the plastic limit.
Medium	The thread is easy to roll and not much time is required to reach the plastic limit. The thread cannot be rerolled after reaching the plastic limit. The lump crumbles when drier than the plastic limit.
High	It takes considerable time rolling and kneading to reach the plastic limit. The thread can be rerolled several times after reaching the plastic limit. The lump can be formed without crumbling when drier than the plastic limit.

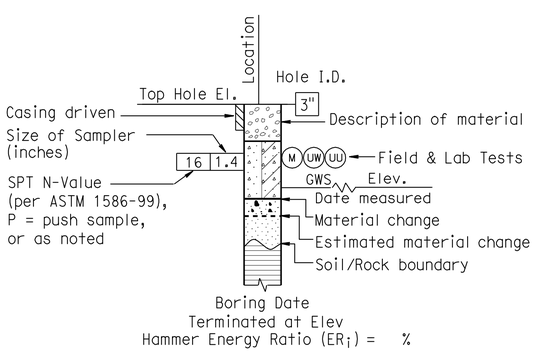

ROTARY BORING

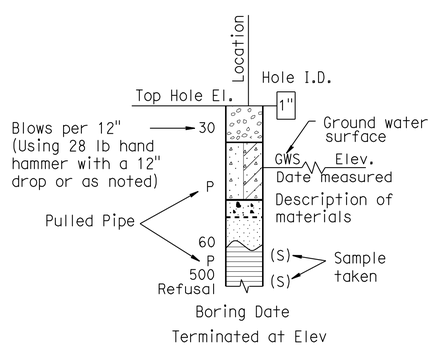

HAND BORING

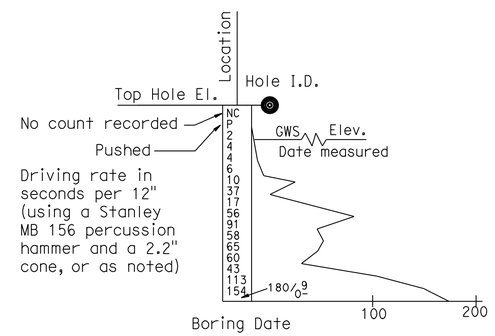

DYNAMIC CONE PENETRATION BORING

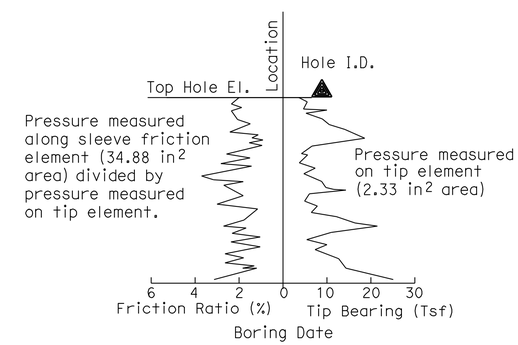

CONE PENETRATION TEST (CPT) SOUNDING

ENGINEERING SERVICES	MATERIALS AND GEOTECHNICAL SERVICES	STATE OF CALIFORNIA DEPARTMENT OF TRANSPORTATION	DIVISION OF ENGINEERING SERVICES STRUCTURE DESIGN DESIGN BRANCH X	BRIDGE NO. 57-0746 POST MILE 8.85	805/54 SEPARATION (WIDEN) LOG OF TEST BORINGS 2 OF 4
	PREPARED BY: F. Nguyen 11/10				

GS LOTB SOIL LEGEND

ORIGINAL SCALE IN INCHES FOR REDUCED PLANS 0 1 2 3

UNIT: 3643
PROJECT NUMBER & PHASE: 11000200501 CONTRACT NO.: 11-2T1811

DISREGARD PRINTS BEARING EARLIER REVISION DATES

REVISION DATES | SHEET 17 OF 19

FILE => e_57-0746r1-z-lotb_2of4.dgn

USERNAME => s124496 DATE PLOTTED => 09-DEC-2011 TIME PLOTTED => 12:17

REFERENCE: CALTRANS SOIL & ROCK LOGGING, CLASSIFICATION, AND PRESENTATION MANUAL (JUNE 2007)

DIST	COUNTY	ROUTE	POST MILES TOTAL PROJECT	SHEET No	TOTAL SHEETS
11	SD	54,805	1.8,5.5/9.4	593	635

REGISTERED CIVIL ENGINEER 8-1-11

12-5-11
PLANS APPROVAL DATE

REGISTERED PROFESSIONAL ENGINEER David T-M Liao No. C59838 Exp. 12-31-11 CIVIL STATE OF CALIFORNIA

The State of California or its officers or agents shall not be responsible for the accuracy or completeness of electronic copies of this plan sheet.

GROUP SYMBOLS AND NAMES

Graphic/Symbol	Group Names	Graphic/Symbol	Group Names
GW	Well-graded GRAVEL Well-graded GRAVEL with SAND	CL	Lean CLAY Lean CLAY with SAND Lean CLAY with GRAVEL SANDY lean CLAY SANDY lean CLAY with GRAVEL GRAVELLY lean CLAY GRAVELLY lean CLAY with SAND
GP	Poorly graded GRAVEL Poorly graded GRAVEL with SAND		
GW-GM	Well-graded GRAVEL with SILT Well-graded GRAVEL with SILT and SAND	CL-ML	SILTY CLAY SILTY CLAY with SAND SILTY CLAY with GRAVEL SANDY SILTY CLAY SANDY SILTY CLAY with GRAVEL GRAVELLY SILTY CLAY GRAVELLY SILTY CLAY with SAND
GW-GC	Well-graded GRAVEL with CLAY (or SILTY CLAY) Well-graded GRAVEL with CLAY and SAND (or SILTY CLAY and SAND)		
GP-GM	Poorly graded GRAVEL with SILT Poorly graded GRAVEL with SILT and SAND	ML	SILT SILT with SAND SILT with GRAVEL SANDY SILT SANDY SILT with GRAVEL GRAVELLY SILT GRAVELLY SILT with SAND
GP-GC	Poorly graded GRAVEL with CLAY (or SILTY CLAY) Poorly graded GRAVEL with CLAY and SAND (or SILTY CLAY and SAND)		
GM	SILTY GRAVEL SILTY GRAVEL with SAND	OL	ORGANIC lean CLAY ORGANIC lean CLAY with SAND ORGANIC lean CLAY with GRAVEL SANDY ORGANIC lean CLAY SANDY ORGANIC lean CLAY with GRAVEL GRAVELLY ORGANIC lean CLAY GRAVELLY ORGANIC lean CLAY with SAND
GC	CLAYEY GRAVEL CLAYEY GRAVEL with SAND		
GC-GM	SILTY, CLAYEY GRAVEL SILTY, CLAYEY GRAVEL with SAND	OL	ORGANIC SILT ORGANIC SILT with SAND ORGANIC SILT with GRAVEL SANDY ORGANIC SILT SANDY ORGANIC SILT with GRAVEL GRAVELLY ORGANIC SILT GRAVELLY ORGANIC SILT with SAND
SW	Well-graded SAND Well-graded SAND with GRAVEL		
SP	Poorly graded SAND Poorly graded SAND with GRAVEL	CH	Fat CLAY Fat CLAY with SAND Fat CLAY with GRAVEL SANDY fat CLAY SANDY fat CLAY with GRAVEL GRAVELLY fat CLAY GRAVELLY fat CLAY with SAND
SW-SM	Well-graded SAND with SILT Well-graded SAND with SILT and GRAVEL		
SW-SC	Well-graded SAND with CLAY (or SILTY CLAY) Well-graded SAND with CLAY and GRAVEL (or SILTY CLAY and GRAVEL)	MH	Elastic SILT Elastic SILT with SAND Elastic SILT with GRAVEL SANDY elastic SILT SANDY elastic SILT with GRAVEL GRAVELLY elastic SILT GRAVELLY elastic SILT with SAND
SP-SM	Poorly graded SAND with SILT Poorly graded SAND with SILT and GRAVEL		
SP-SC	Poorly graded SAND with CLAY (or SILTY CLAY) Poorly graded SAND with CLAY and GRAVEL (or SILTY CLAY and GRAVEL)	OH	ORGANIC fat CLAY ORGANIC fat CLAY with SAND ORGANIC fat CLAY with GRAVEL SANDY ORGANIC fat CLAY SANDY ORGANIC fat CLAY with GRAVEL GRAVELLY ORGANIC fat CLAY GRAVELLY ORGANIC fat CLAY with SAND
SM	SILTY SAND SILTY SAND with GRAVEL		
SC	CLAYEY SAND CLAYEY SAND with GRAVEL	OH	ORGANIC elastic SILT ORGANIC elastic SILT with SAND ORGANIC elastic SILT with GRAVEL SANDY ORGANIC elastic SILT SANDY ORGANIC elastic SILT with GRAVEL GRAVELLY ORGANIC elastic SILT GRAVELLY ORGANIC elastic SILT with SAND
SC-SM	SILTY, CLAYEY SAND SILTY, CLAYEY SAND with GRAVEL		
PT	PEAT	OL/OH	ORGANIC SOIL ORGANIC SOIL with SAND ORGANIC SOIL with GRAVEL SANDY ORGANIC SOIL SANDY ORGANIC SOIL with GRAVEL GRAVELLY ORGANIC SOIL GRAVELLY ORGANIC SOIL with SAND
	COBBLES COBBLES and BOULDERS BOULDERS		

FIELD AND LABORATORY TESTING

- (C) Consolidation (ASTM D 2435)
- (CL) Collapse Potential (ASTM D 5333)
- (CP) Compaction Curve (CTM 216)
- (CR) Corrosivity Testing (CTM 643, CTM 422, CTM 417)
- (CU) Consolidated Undrained Triaxial (ASTM D 4767)
- (DS) Direct Shear (ASTM D 3080)
- (EI) Expansion Index (ASTM D 4829)
- (M) Moisture Content (ASTM D 2216)
- (OC) Organic Content-% (ASTM D 2974)
- (P) Permeability (CTM 220)
- (PA) Particle Size Analysis (ASTM D 422)
- (PI) Plasticity Index (AASHTO T 90) Liquid Limit (AASHTO T 89)
- (PL) Point Load Index (ASTM D 5731)
- (PM) Pressure Meter
- (PP) Pocket Penetrometer
- (R) R-Value (CTM 301)
- (SE) Sand Equivalent (CTM 217)
- (SG) Specific Gravity (AASHTO T 100)
- (SL) Shrinkage Limit (ASTM D 427)
- (SW) Swell Potential (ASTM D 4546)
- (TV) Pocket Torvane
- (UC) Unconfined Compression-Soil (ASTM D 2166) Unconfined Compression-Rock (ASTM D 2938)
- (UU) Unconsolidated Undrained Triaxial (ASTM D 2850)
- (UW) Unit Weight (ASTM D 4767)
- (VS) Vane Shear (AASHTO T 223)

APPARENT DENSITY OF COHESIONLESS SOILS

Description	SPT N_{60} (Blows / 12 inches)
Very loose	0 - 4
Loose	5 - 10
Medium Dense	11 - 30
Dense	31 - 50
Very Dense	> 50

MOISTURE

Description	Criteria
Dry	Absence of moisture, dusty, dry to the touch
Moist	Damp but no visible water
Wet	Visible free water, usually soil is below water table

PERCENT OR PROPORTION OF SOILS

Description	Criteria
Trace	Particles are present but estimated to be less than 5%
Few	5 to 10%
Little	15 to 25%
Some	30 to 45%
Mostly	50 to 100%

PARTICLE SIZE

Description		Size
Boulder		> 12"
Cobble		3" to 12"
Gravel	Coarse	3/4" to 3"
	Fine	No. 4 to 3/4"
Sand	Coarse	No. 10 to No. 4
	Medium	No. 40 to No. 10
	Fine	No. 200 to No. 40

ENGINEERING SERVICES

MATERIALS AND GEOTECHNICAL SERVICES

PREPARED BY: F. Nguyen 11/10

STATE OF CALIFORNIA DEPARTMENT OF TRANSPORTATION

DIVISION OF ENGINEERING SERVICES STRUCTURE DESIGN
DESIGN BRANCH X

BRIDGE NO. 57-0746
POST MILE 8.85

805/54 SEPARATION (WIDEN)
LOG OF TEST BORINGS 3 OF 4

GS LOTB SOIL LEGEND

ORIGINAL SCALE IN INCHES FOR REDUCED PLANS 0 1 2 3

UNIT: 3643
PROJECT NUMBER & PHASE: 11000200501
CONTRACT NO.: 11-2T1811

DISREGARD PRINTS BEARING EARLIER REVISION DATES

REVISION DATES

SHEET 18 OF 19

FILE => e_57-0746r1-z-lotb_3of4.dgn

USERNAME => s124496 DATE PLOTTED => 09-DEC-2011 TIME PLOTTED => 12:17

DIST.	COUNTY	ROUTE	POST MILES - TOTAL PROJECT	Sheet No.	Total Sheets
11	SD	805,54	89/102, 24/35	224	306

Bench Mark
BM# 893 Elev. 32.43
2" iron pipe with standard brass disc set on West side of Shelby St. at River Rd. Set 2' East of base of joint pole # 86420 (D3612(T)).

TO ACCOMPANY PLANS DATED 12-5-11

DIVISION OF ENGINEERING SERVICES - MATERIALS AND GEOTECHNICAL SERVICES

As-Built Log of Test Borings sheet is considered an informational document only. As such, the State of California registration seal with signature, license number and registration certificate expiration date confirm that this is a true and accurate copy of the original document. It does not attest to the accuracy or validity of the information contained in the original document. This drawing is available and presented only for the convenience of any bidder, contractor or other interested party.

DIST.	COUNTY	ROUTE	POST MILE-TOTAL PROJECT	Sheet No.	Total Sheets
11	SD	54,805	1.8,5.5/9.4	594	635

REGISTERED CIVIL ENGINEER — DATE 7-14-11

REGISTERED PROFESSIONAL ENGINEER — David T-M Liao — No. C59838 — Exp. 12-31-11 — CIVIL — STATE OF CALIFORNIA

805/54 SEPARATION (WIDEN)
LOG OF TEST BORINGS 4 OF 4

UNIT: 3643	CONTRACT No.	BRIDGE No.
PROJECT NUMBER & PHASE: 11000200501	11-2T1811	57-0746

NOTE: A COPY OF THIS LOG OF TEST BORINGS IS AVAILABLE AT OFFICE OF STRUCTURE MAINTENANCE AND INVESTIGATIONS, SACRAMENTO, CALIFORNIA — Sheet 19 of 19

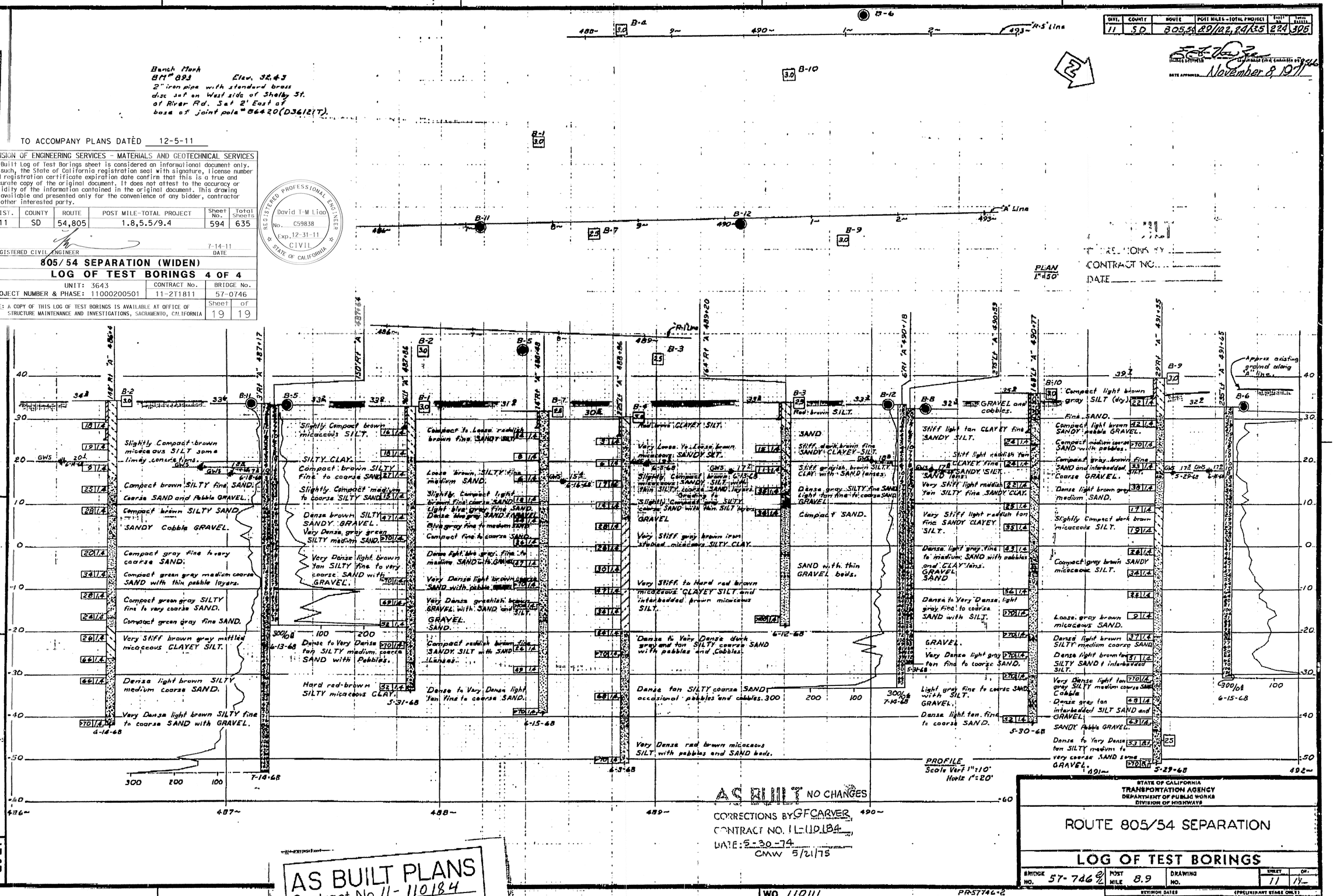

LEGEND OF BORING OPERATIONS

Penetrometer — 2½" Core Penetrometer — Sample Barrel (Arrow) — Rotary Borings (Wet) — Auger Borings (Dry) — Jet Borings — Core Borings — Test Pit — Penetration Probe — 1" Soil Tube

LEGEND OF EARTH MATERIALS

Gravel — Sand — Silt — Clay — Silty Clay or Clayey Silt — Sandy Silt or Silty Sand — Peat, Muck, Organic Matter — Fill Material — Igneous Rock — Sedimentary Rock — Metamorphic Rock

CLASSIFICATION OF MATERIAL BASED ON STANDARD GRADE SIZE LIMITS

Durable rocks the size for estimated quantities of rock shown in certain sections of class rock. If good, it proves to approximate the terms "gravelly" and "sandy" respectively. The terms "coarse", "medium" and "fine" refer to the relative size of standard grade size limits.

NOTE: Classification of earth material as shown on this sheet is based upon field inspection and is not to be construed to imply mechanical analysis.

BRIDGE DEPARTMENT
ENGINEERING GEOLOGY SECTION

FIELD STUDY: W. J. Blanks 7-15-68
DRAWN: W. J. Blanks 7-15-68
CHECKED: W. J. Blanks 7-15-68
Approved: Engineering Geologist

AS BUILT NO CHANGES
CORRECTIONS BY GF CARVER
CONTRACT NO. 11-110184
DATE: 5-30-74
CMW 5/21/75

AS BUILT PLANS
Contract No. 11-110184
Date Completed 4-30-75
Document No. A000 6264

STATE OF CALIFORNIA
TRANSPORTATION AGENCY
DEPARTMENT OF PUBLIC WORKS
DIVISION OF HIGHWAYS

ROUTE 805/54 SEPARATION

LOG OF TEST BORINGS

BRIDGE NO.	POST MILE	DRAWING NO.	SHEET	OF
57-746	8.9		11	19

WO 110111
CU 11201
PRS7746-2
Changed prior bearing earlier revision dates
REVISION DATES — (PRELIMINARY STAGE ONLY)

FILENAME => e_57-0746r1-z_lotb_4of4.tif

PRINTED ON 100% RAGFIBER

224

DIST	COUNTY	ROUTE	POST MILES TOTAL PROJECT	SHEET No.	TOTAL SHEETS
11	SD	54,805	1.8,5.5/9.4	595	635

Tony Skreslet 8-25-11
REGISTERED CIVIL ENGINEER DATE

12-5-11
PLANS APPROVAL DATE

REGISTERED PROFESSIONAL ENGINEER TONY SKRESLET No. C50676 Exp. 09-30-11 CIVIL STATE OF CALIFORNIA

The State of California or its officers or agents shall not be responsible for the accuracy or completeness of electronic copies of this plan sheet.

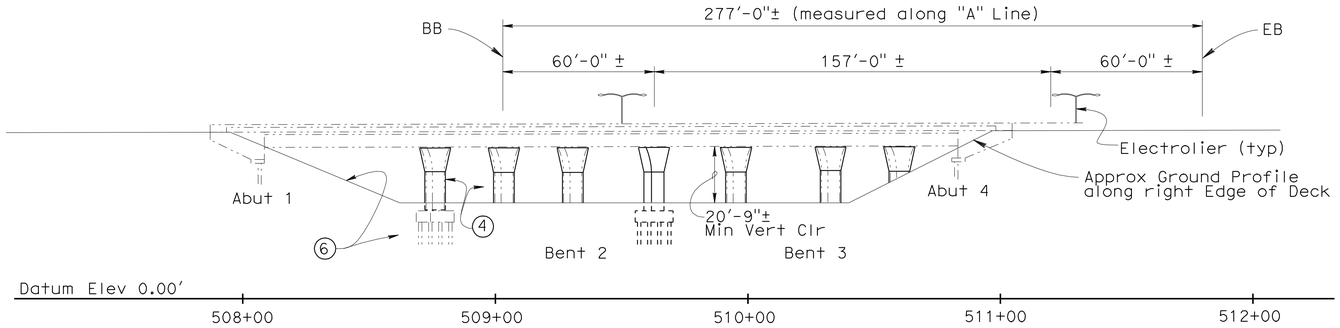

ELEVATION
1" = 30'-0"

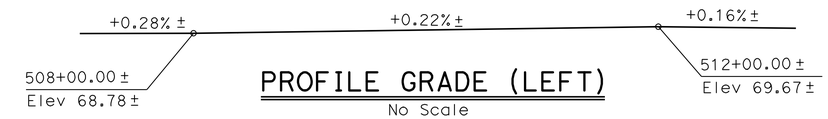

PROFILE GRADE (LEFT)
No Scale

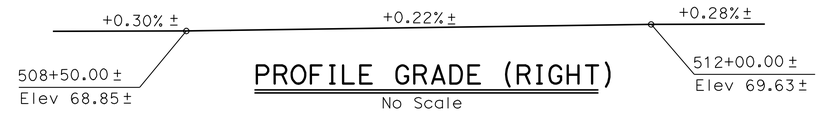

PROFILE GRADE (RIGHT)
No Scale

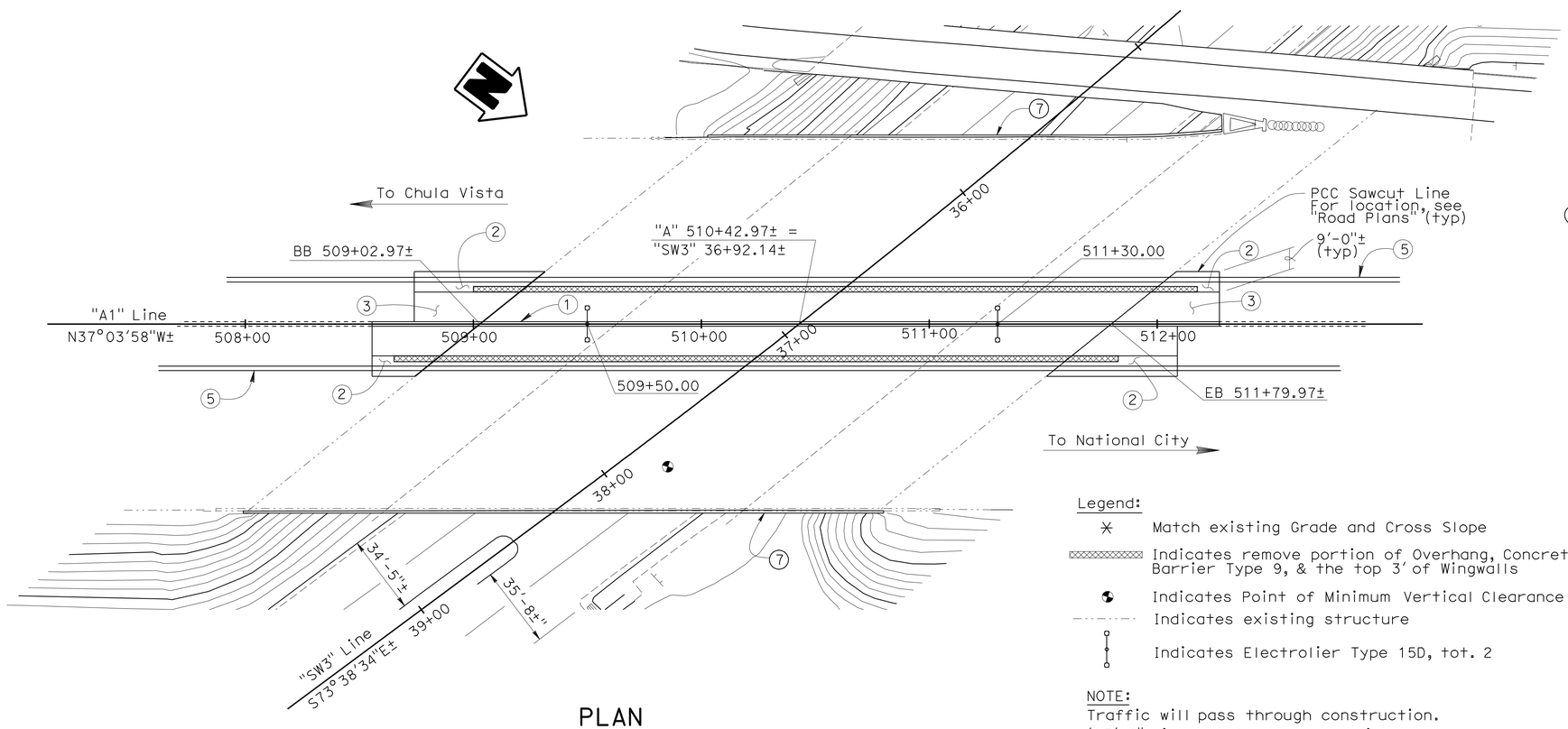

PLAN
1" = 30'-0"

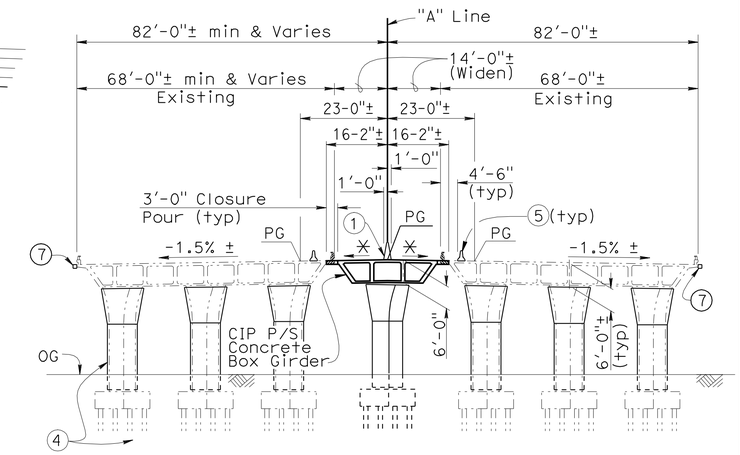

TYPICAL SECTION
1" = 20'-0"

Legend:

- ✳ Match existing Grade and Cross Slope
- Indicates remove portion of Overhang, Concrete Barrier Type 9, & the top 3' of Wingwalls
- Indicates Point of Minimum Vertical Clearance
- Indicates existing structure
- Indicates Electrolier Type 15D, tot. 2

NOTE:
Traffic will pass through construction. (15'-0" Min Vert Clearance required under Falsework). Widening will occur on outside first then the inside.

NOTES:

1. Concrete Barrier Type 60GA
2. Structure Approach Type R(30D), transverse width from widening to roadway sawcut line, see "Road Plans"
3. Structure Approach Type N(30D), transverse width to match widening
4. Retrofit existing Columns w/ steel Column Casings
5. Temporary Railing (Type K), see "Road Plans"
6. Slope Paving (Masonry Block)
7. Galvanized Steel Edge Drain

NOTE:
THE CONTRACTOR SHALL VERIFY ALL CONTROLLING FIELD DIMENSIONS BEFORE ORDERING OR FABRICATING ANY MATERIAL.

Douglas J. Dunnel
DESIGN ENGINEER

	BY	CHECKED
DESIGN	P. A. Peterson	J. M. Peterson
DETAILS	P. A. Peterson	J. M. Peterson
QUANTITIES	P. A. Peterson	J. M. Peterson

LOAD & RESISTANCE FACTOR DESIGN — LIVE LOADING: HL93 W/"LOW-BOY"; PERMIT DESIGN VEHICLE

	BY	CHECKED
LAYOUT	P. A. Peterson	P. A. Peterson
SPECIFICATIONS	R. Franti	PLANS AND SPECS COMPARED X

ORIGINAL SCALE IN INCHES FOR REDUCED PLANS 0 1 2 3

STATE OF CALIFORNIA
DEPARTMENT OF TRANSPORTATION

DIVISION OF ENGINEERING SERVICES
STRUCTURE DESIGN
DESIGN BRANCH 14

BRIDGE NO. 57-0639
POST MILE 9.07

SWEETWATER ROAD UC (WIDEN)
GENERAL PLAN

UNIT: 3613
PROJECT NUMBER & PHASE: 11000200501
CONTRACT NO.: 11-2T1811

DISREGARD PRINTS BEARING EARLIER REVISION DATES → 10-14-11 10-18-11 10-20-11 09-21-11

SHEET 1 OF 20

DIST	COUNTY	ROUTE	POST MILES TOTAL PROJECT	SHEET No.	TOTAL SHEETS
11	SD	54,805	1.8,5.5/9.4	596	635

Tony Skreslet 8-25-11
REGISTERED CIVIL ENGINEER DATE

12-5-11
PLANS APPROVAL DATE

REGISTERED PROFESSIONAL ENGINEER TONY SKRESLET No. C50676 Exp. 09-30-11 CIVIL STATE OF CALIFORNIA

The State of California or its officers or agents shall not be responsible for the accuracy or completeness of electronic copies of this plan sheet.

INDEX TO PLANS

SHEET NO.	TITLE
1	GENERAL PLAN
2	INDEX TO PLANS
3	FOUNDATION PLAN
4	ABUTMENT LAYOUT
5	BENT LAYOUT
6	BENT DETAILS
7	BENT FOOTING DETAILS
8	TYPICAL SECTION
9	GIRDER LAYOUT
10	STEEL COLUMN CASINGS (SEISMIC RETROFIT)
11	SLOPE PAVING (MASONRY BLOCK)
12	STRUCTURE APPROACH TYPE N (30D)
13	STRUCTURE APPROACH TYPE R (30D)
14	STRUCTURE APPROACH DRAINAGE DETAILS
15	MISCELLANEOUS DETAILS NO. 1
16	MISCELLANEOUS DETAILS NO. 2
17	LOG OF TEST BORINGS 1 OF 4
18	LOG OF TEST BORINGS 2 OF 4
19	LOG OF TEST BORINGS 3 OF 4
20	LOG OF TEST BORINGS 4 OF 4

PILE DATA TABLE

LOCATION	PILE TYPE	NOMINAL RESISTANCE (KIPS)		DESIGN TIP ELEVATION (FT)	SPECIFIED TIP ELEVATION (FT)	NOMINAL DRIVING RESISTANCE (KIPS)
		Compression	Tension			
Abutment 1	HP 10X57	240	0	-4.0(a)	-4.0	N/A
Bent 2	HP 14X89	310	190	-3.0(a) -5.0(b)	-5.0	N/A
Bent 3	HP 14X89	380	180	-40.0(a) -35.0(b)	-40.0	670
Abutment 4	HP 10X57	240	0	-3.0(a)	-3.0	N/A

NOTES:

1. Design Tip controlled by (a) Compression (b) Tension (c) Lateral
2. Abutment HP 10x57 Piles shall have lugs installed to aid in achieving the required nominal resistance in Compression. For 'STEEL PILE LUG DETAIL', see "ABUTMENT LAYOUT" sheet

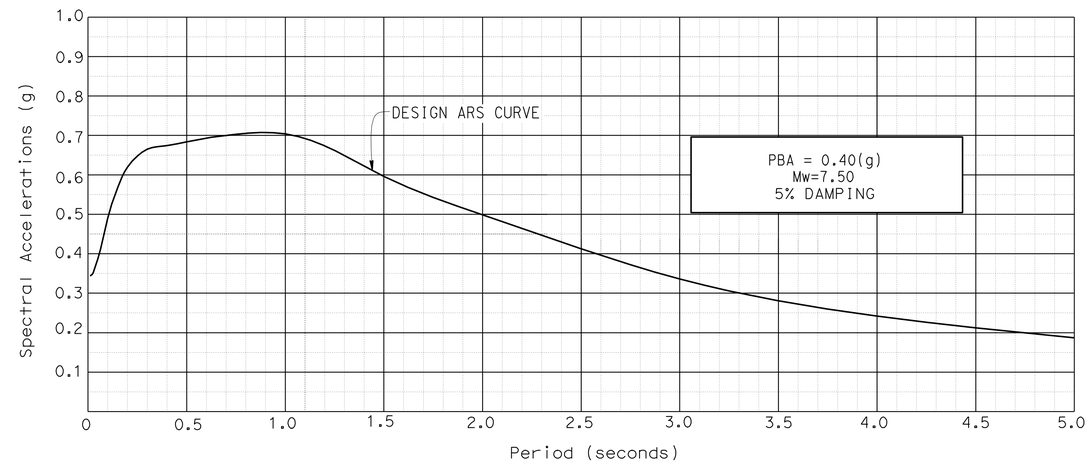

SITE SPECIFIC ACCELERATION RESPONSE SPECTRA

No Scale

STANDARD PLANS DATED MAY 2006

A10A	ABBREVIATIONS
A62C	LIMITS OF PAYMENT FOR EXCAVATION AND BACKFILL BRIDGE
A76D	CONCRETE BARRIER TYPE 60G
B0-1	BRIDGE DETAILS
B0-3	BRIDGE DETAILS
B0-5	BRIDGE DETAILS
B0-13	BRIDGE DETAILS
B6-21	JOINT SEALS (MAXIMUM MOVEMENT RATING = 2)
B7-1	BOX GIRDER DETAILS
B7-1	BOX GIRDER DETAILS
B8-5	CAST-IN-PLACE PRESTRESSED GIRDER DETAILS

STANDARD PLAN SHEET NO.

DETAIL NO.

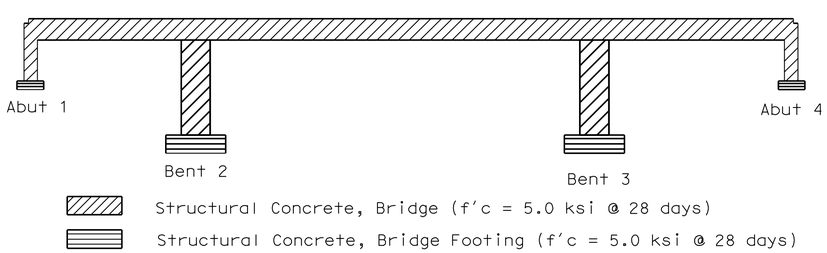

CONCRETE STRENGTH AND TYPE LIMITS

No Scale

QUANTITIES

BRIDGE REMOVAL (PORTION), LOCATION F	LUMP	SUM
STRUCTURE EXCAVATION (BRIDGE)	637	CY
STRUCTURE BACKFILL (BRIDGE)	368	CY
AGGREGATE BASE (APPROACH SLAB)	6	CY
FURNISH STEEL PILING (HP 10 X 57)	600	LF
DRIVE STEEL PILE (HP 10 X 57)	12	EA
FURNISH STEEL PILING (HP 14 X 89)	2,880	LF
DRIVE STEEL PILE (HP 14 X 89)	72	EA
PRESTRESSING CAST-IN-PLACE CONCRETE	LUMP	SUM
STRUCTURAL CONCRETE, BRIDGE FOOTING	174	CY
STRUCTURAL CONCRETE, BRIDGE	814	CY
STRUCTURAL CONCRETE, APPROACH SLAB (TYPE N)	98	CY
STRUCTURAL CONCRETE, APPROACH SLAB (TYPE R)	63	CY
PAVING NOTCH EXTENSION	54	CF
DRILL AND BOND DOWEL	20	LF
JOINT SEAL (MR 2")	147	LF
BAR REINFORCING STEEL (BRIDGE)	262,182	LB
BAR REINFORCING STEEL (EPOXY COATED) (BRIDGE)	6,007	LB
HEADED BAR REINFORCEMENT	72	EA
COLUMN CASING	120,000	LB
SLOPE PAVING (MASONRY BLOCK)	22,692	SQFT
BRIDGE DECK DRAINAGE SYSTEM	8,974	LB
CONCRETE BARRIER (TYPE 60GA)	373	LF

GENERAL NOTES
LOAD AND RESISTANCE FACTOR DESIGN

DESIGN: AASHTO LRFD BRIDGE DESIGN SPECIFICATIONS (4rd edition 2007 and California Amendments December 2008 and September 2010).

SEISMIC DESIGN: CALTRANS SEISMIC DESIGN CRITERIA (SDC) Version 1.5 September 2009

DEAD LOAD: Includes 35 psf for future wearing surface.

LIVE LOADING: HL93 with "Low-Boy" and Permit Design Vehicle.

SEISMIC LOADING: See Site Specific Acceleration Response Spectra

REINFORCED CONCRETE: f_y = 60 Ksi
f'_c = See "Concrete Strength and Type Limits."

PRESTRESSED CONCRETE: See "Prestressing Notes" on "Girder Layout" sheet.

STRUCTURAL STEEL: f_y = ASTM A709 Grade 50

NOTE:
THE CONTRACTOR SHALL VERIFY ALL CONTROLLING FIELD DIMENSIONS BEFORE ORDERING OR FABRICATING ANY MATERIAL.

	BY	CHECKED
DESIGN	P. A. Peterson	J. M. Peterson
DETAILS	P. A. Peterson	J. M. Peterson
QUANTITIES	P. A. Peterson	J. M. Peterson

STATE OF CALIFORNIA
DEPARTMENT OF TRANSPORTATION

DIVISION OF ENGINEERING SERVICES
STRUCTURE DESIGN
DESIGN BRANCH 14

BRIDGE NO. 57-0639
POST MILE 9.07

SWEETWATER ROAD UC (WIDEN)
INDEX TO PLANS

STRUCTURES DESIGN DETAIL SHEET (ENGLISH) (REV. 09-01-10)

ORIGINAL SCALE IN INCHES FOR REDUCED PLANS 0 1 2 3

UNIT: 3613
PROJECT NUMBER & PHASE: 11000200501
CONTRACT NO.: 11-2T1811

DISREGARD PRINTS BEARING EARLIER REVISION DATES

REVISION DATES: 08-09-11 10-12-11 08-02-11 08-08-11

SHEET 2 OF 20

FILE => f_57-0639-b-itp.dgn

USERNAME => s124496 DATE PLOTTED => 09-DEC-2011 TIME PLOTTED => 12:38

DIST	COUNTY	ROUTE	POST MILES TOTAL PROJECT	SHEET No	TOTAL SHEETS
11	SD	54,805	1.8,5.5/9.4	597	635

Tony Skreslet 12-23-02
REGISTERED CIVIL ENGINEER DATE

12-5-11
PLANS APPROVAL DATE

REGISTERED PROFESSIONAL ENGINEER TONY SKRESLET No. C50676 Exp. 09-30-11 CIVIL STATE OF CALIFORNIA

The State of California or its officers or agents shall not be responsible for the accuracy or completeness of electronic copies of this plan sheet.

NOTES:

1. Utilities are per district utility map, dated 5-7-2007. Locations are approximate.
2. Utilities are per district utility map, dated 4-5-2010. Locations are approximate.

-·-·-·- Indicates Existing Footings

⊢-⊣ Indicates Piles (not all shown)

▭ Indicates bottom of Footing elevation

CURVE DATA

No.	R	Δ	T	L
Ⓐ	5000.00±	4°05'09"±	178.35±	356.56±

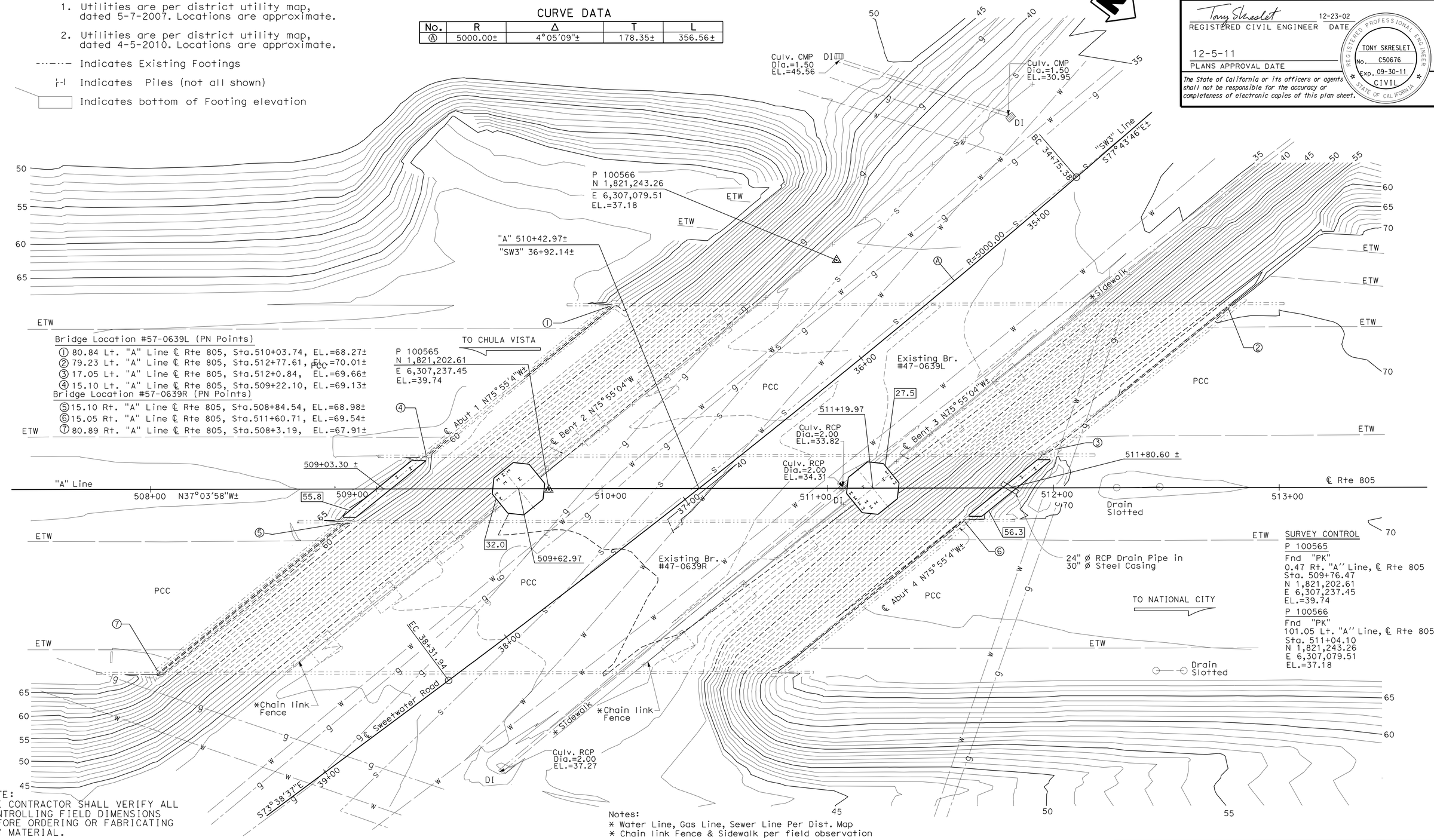

NOTE:
THE CONTRACTOR SHALL VERIFY ALL CONTROLLING FIELD DIMENSIONS BEFORE ORDERING OR FABRICATING ANY MATERIAL.

Notes:
* Water Line, Gas Line, Sewer Line Per Dist. Map
* Chain link Fence & Sidewalk per field observation

PRELIMINARY INVESTIGATION SECTION

SCALE 1"=20'	VERT.DATUM NAVD 88	PHOTOGRAMMETRY AS OF: X			
	HORZ.DATUM NAD 83 (2007)	SURVEYED BY District	CHECKED BY Jim Pallares 08/2010		
ALIGNMENT TIES Dist. Traverse Sheet		DRAFTED BY Sharon Zheng 08/2010	CHECKED BY T.Zolnikov 08/2010		

STRUCTURES FOUNDATION PLAN SHEET (ENGLISH) (REV. 10/25/05)

DESIGN	BY P. A. Peterson	CHECKED J. M. Peterson
DETAILS	BY PAP/T. Nguyen	CHECKED J. M. Peterson
QUANTITIES	BY P. A. Peterson	CHECKED J. M. Peterson

ORIGINAL SCALE IN INCHES FOR REDUCED PLANS 0 1 2 3

STATE OF CALIFORNIA
DEPARTMENT OF TRANSPORTATION

DIVISION OF ENGINEERING SERVICES
STRUCTURE DESIGN
DESIGN BRANCH 14

CU 3613
PN & PHASE 11000200501

BRIDGE NO. 57-0639
POST MILE 9.07

SWEETWATER ROAD UC (WIDEN)
FOUNDATION PLAN

DISREGARD PRINTS BEARING EARLIER REVISION DATES

REVISION DATES: 11/19/2010 2/2/2011 2-22-11 3-2-11 3-23-11 04-15-11 06-14-11 06-27-11

SHEET 3 OF 20

FILE => f_57-0639-e-fp.dgn

USERNAME => s124496 DATE PLOTTED => 09-DEC-2011 TIME PLOTTED => 12:38

DIST	COUNTY	ROUTE	POST MILES TOTAL PROJECT	SHEET No.	TOTAL SHEETS
11	SD	54,805	1.8,5.5/9.4	598	635

REGISTERED CIVIL ENGINEER — DATE 8-25-11

12-5-11
PLANS APPROVAL DATE

REGISTERED PROFESSIONAL ENGINEER — TONY SKRESLET No. C50676 Exp. 09-30-11 CIVIL — STATE OF CALIFORNIA

The State of California or its officers or agents shall not be responsible for the accuracy or completeness of electronic copies of this plan sheet.

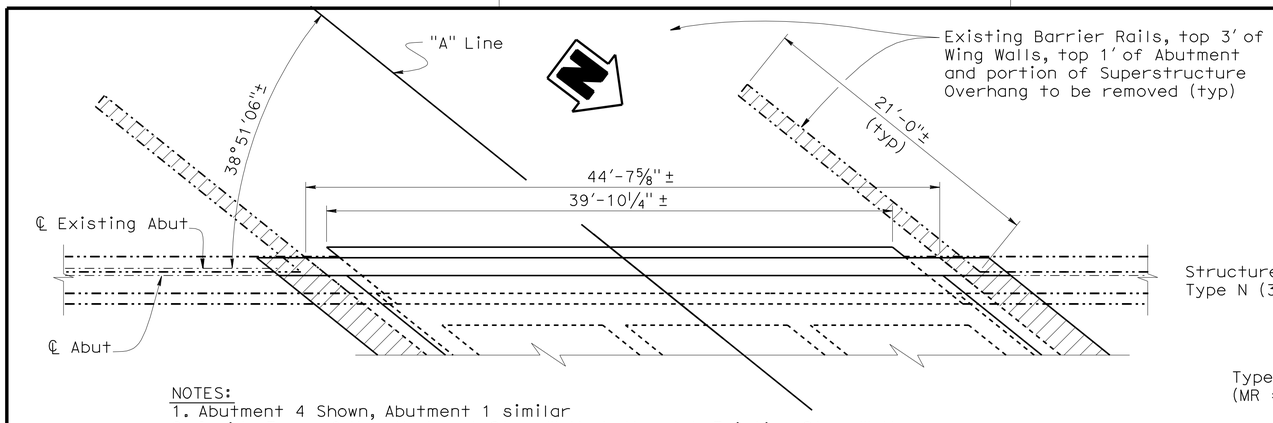

NOTES:
1. Abutment 4 Shown, Abutment 1 similar
2. Inside Face of New Abutment Stem Wall shall match Existing Stem Wall

PLAN
3/16" = 1'-0"

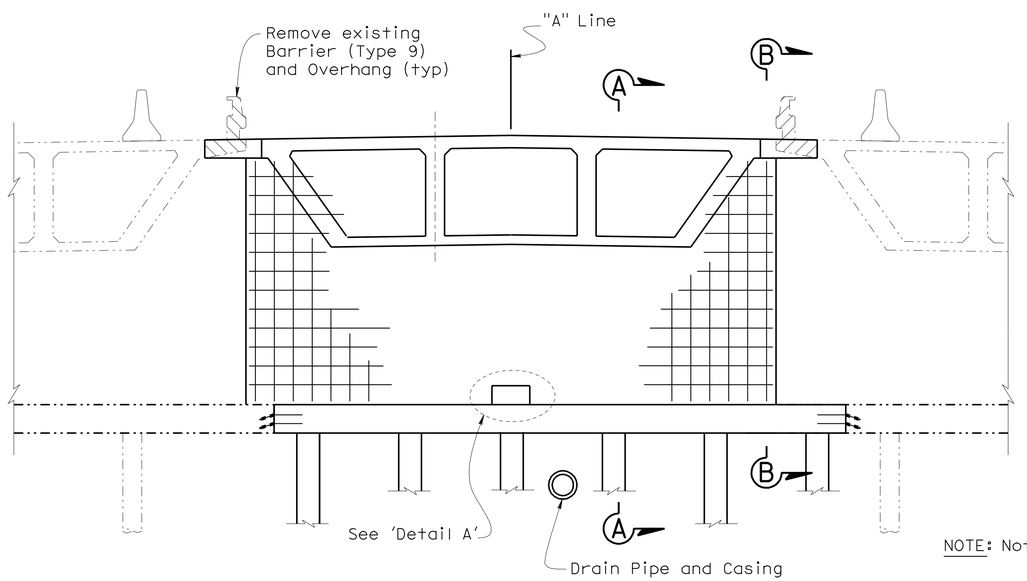

ELEVATION
3/16" = 1'-0"

NOTE: Not all Piles shown.

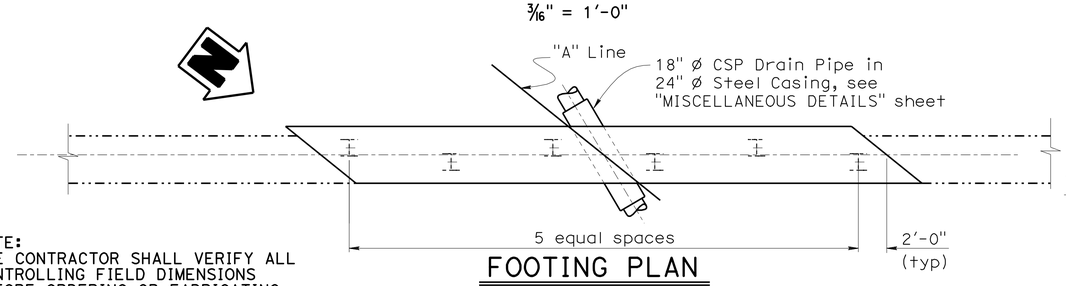

FOOTING PLAN
3/16" = 1'-0"

NOTE: New Approach Slabs and Barrier Rail not shown.

LEGEND:
- Indicates Existing Structure
- Indicates HP 14x89 Piles
- Indicates 14" Pipe Pile
- Indicates portion of Abutment and Superstructure be removed

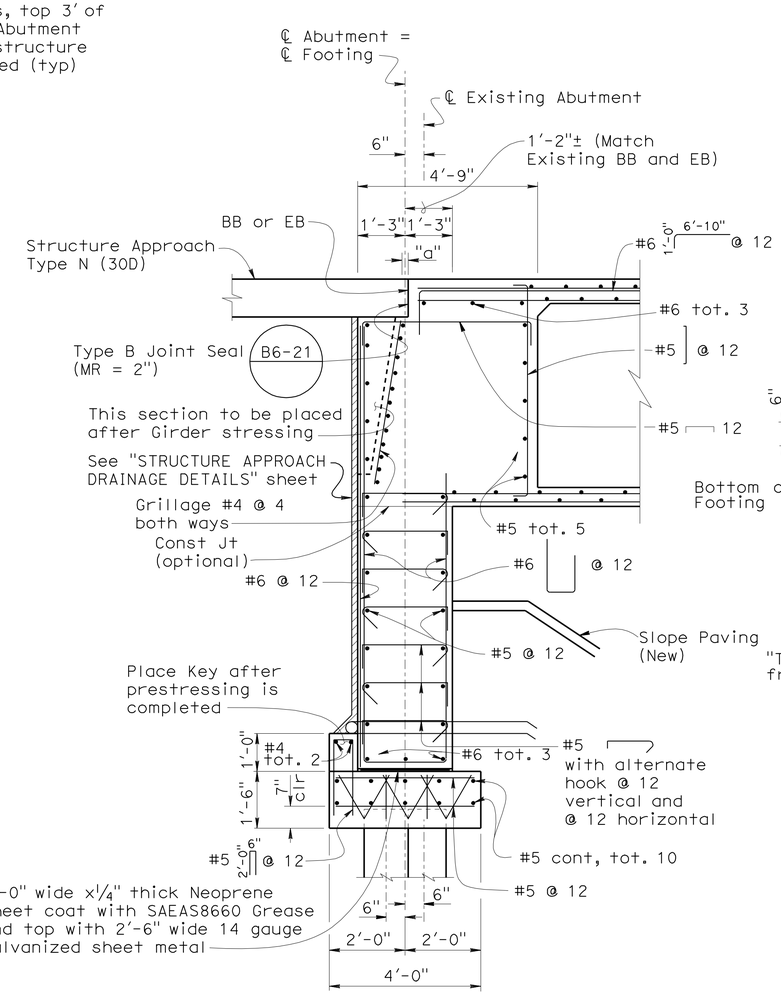

SECTION A-A
½" = 1'-0"

B6-21 B8-5

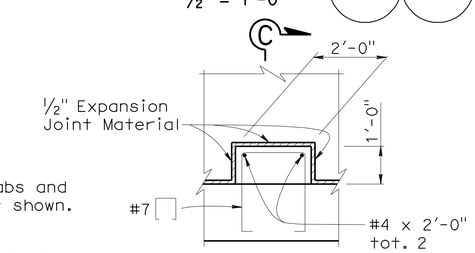

DETAIL A
½" = 1'-0"

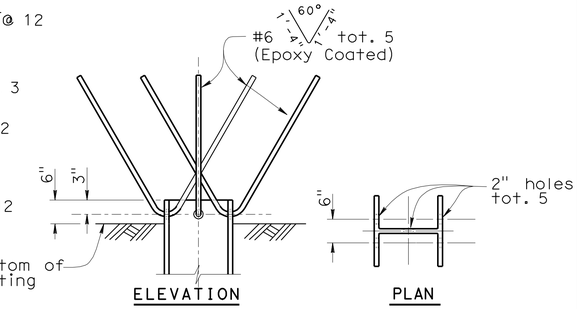

STEEL PILE ANCHOR DETAIL
No Scale

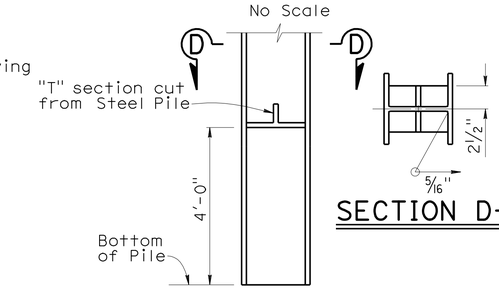

SECTION D-D

STEEL PILE LUG DETAIL
No Scale

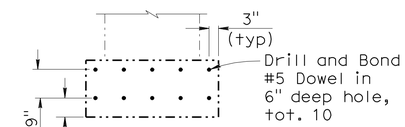

SECTION B-B
½" = 1'-0"

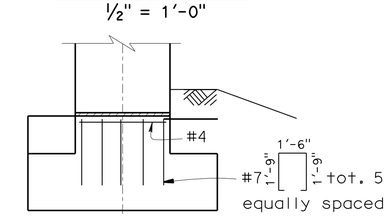

NOTE:
Reinforcement shown is in addition to that shown on 'Section A-A'

SECTION C-C
½" = 1'-0"

NOTE:
THE CONTRACTOR SHALL VERIFY ALL CONTROLLING FIELD DIMENSIONS BEFORE ORDERING OR FABRICATING ANY MATERIAL.

	BY	CHECKED
DESIGN	P. A. Peterson	J. M. Peterson
DETAILS	P. A. Peterson	J. M. Peterson
QUANTITIES	P. A. Peterson	J. M. Peterson

STATE OF CALIFORNIA
DEPARTMENT OF TRANSPORTATION

DIVISION OF ENGINEERING SERVICES
STRUCTURE DESIGN
DESIGN BRANCH 14

BRIDGE NO. 57-0639
POST MILE 9.07

SWEETWATER ROAD UC (WIDEN)
ABUTMENT LAYOUT

STRUCTURES DESIGN DETAIL SHEET (ENGLISH) (REV. 09-01-10)

ORIGINAL SCALE IN INCHES FOR REDUCED PLANS 0 1 2 3

UNIT: 3613
PROJECT NUMBER & PHASE: 11000200501
CONTRACT NO.: 11-2T1811

DISREGARD PRINTS BEARING EARLIER REVISION DATES

REVISION DATES: 08-12-11 07-06-11 08-02-11 08-08-11

SHEET 4 OF 20

FILE => f_57-0639-f-abut_lo.dgn

USERNAME => s124496 DATE PLOTTED => 09-DEC-2011 TIME PLOTTED => 12:38

DIST	COUNTY	ROUTE	POST MILES TOTAL PROJECT	SHEET No.	TOTAL SHEETS
11	SD	54,805	1.8,5.5/9.4	599	635

Tony Skreslet 8-25-11
REGISTERED CIVIL ENGINEER DATE

12-5-11
PLANS APPROVAL DATE

REGISTERED PROFESSIONAL ENGINEER TONY SKRESLET No. C50676 Exp. 09-30-11 CIVIL STATE OF CALIFORNIA

The State of California or its officers or agents shall not be responsible for the accuracy or completeness of electronic copies of this plan sheet.

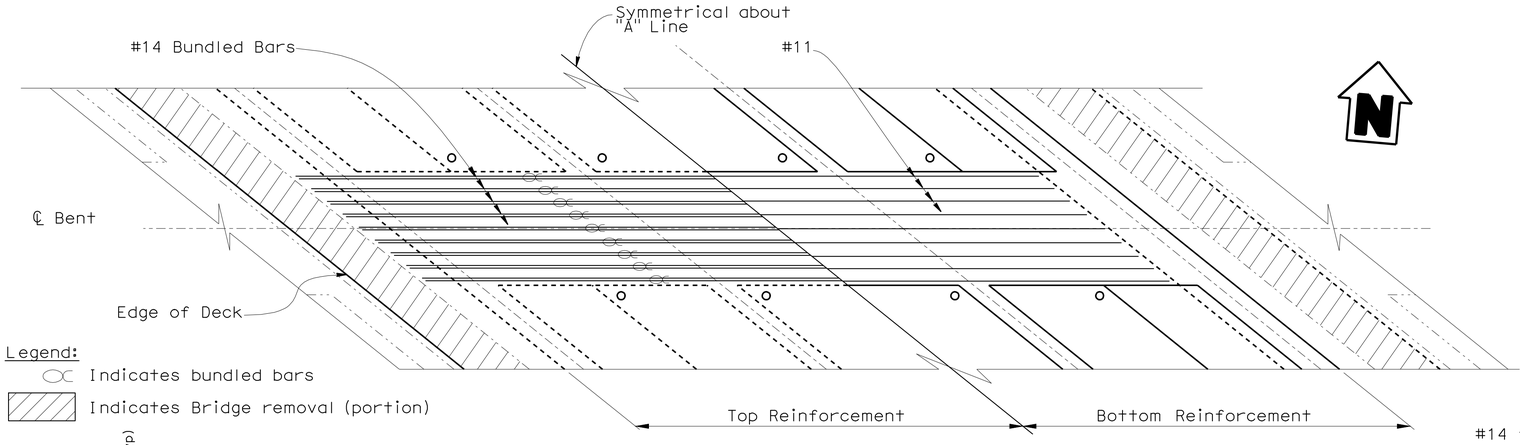

Legend:
Indicates bundled bars
Indicates Bridge removal (portion)

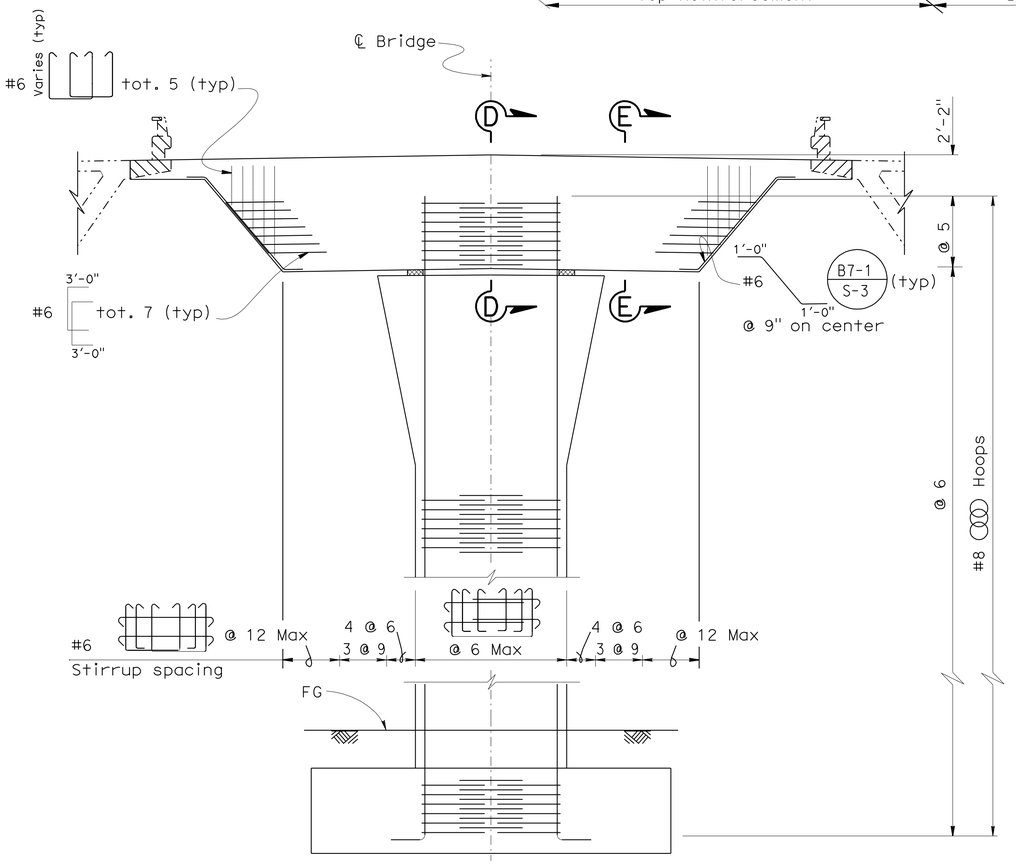

NOTE: Footing reinforcement and Piles not shown.

ELEVATION

1/4" = 1'-0"

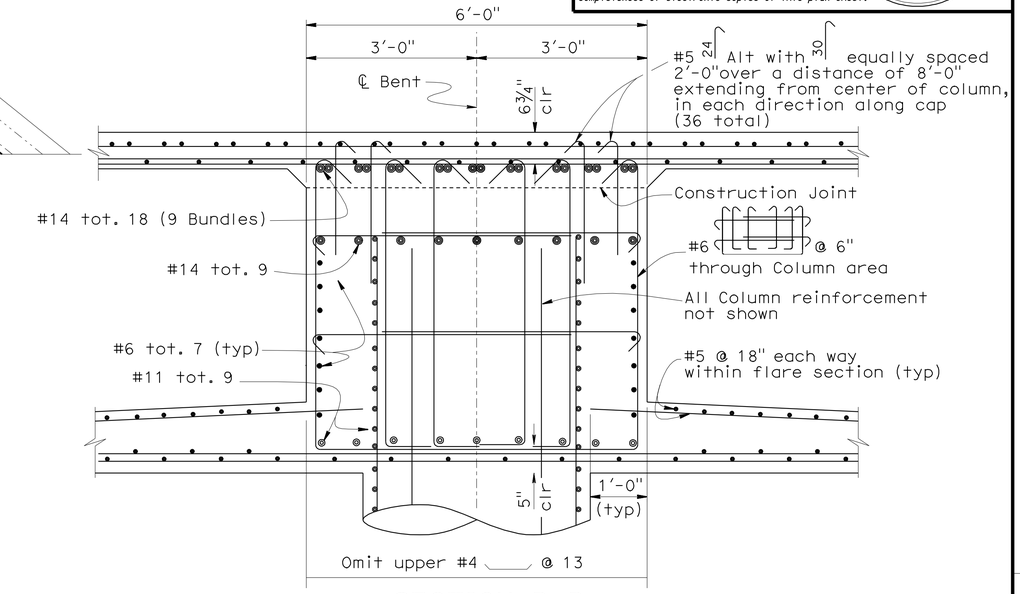

SECTION D-D

3/4" = 1'-0"

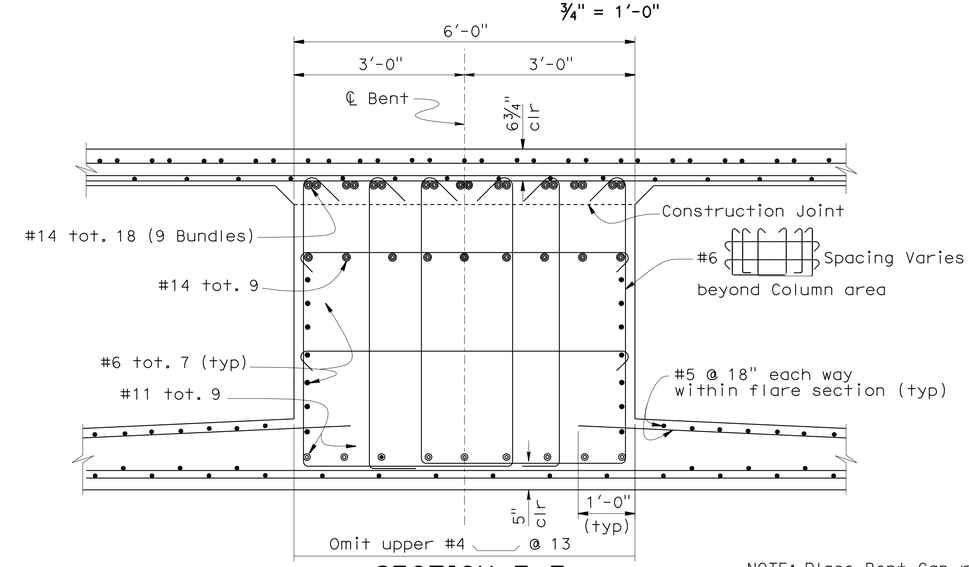

SECTION E-E

3/4" = 1'-0"

NOTE: Place Bent Cap reinforcement and stirrups normal to Bent

NOTE:
THE CONTRACTOR SHALL VERIFY ALL CONTROLLING FIELD DIMENSIONS BEFORE ORDERING OR FABRICATING ANY MATERIAL.

	BY	CHECKED
DESIGN	P. A. Peterson	J. M. Peterson
DETAILS	P. A. Peterson	J. M. Peterson
QUANTITIES	P. A. Peterson	J. M. Peterson

STATE OF CALIFORNIA
DEPARTMENT OF TRANSPORTATION

DIVISION OF ENGINEERING SERVICES
STRUCTURE DESIGN
DESIGN BRANCH 14

BRIDGE NO. 57-0639
POST MILE 9.07

SWEETWATER ROAD UC (WIDEN)
BENT LAYOUT

STRUCTURES DESIGN DETAIL SHEET (ENGLISH) (REV. 09-01-10)

ORIGINAL SCALE IN INCHES FOR REDUCED PLANS 0 1 2 3

UNIT: 3613
PROJECT NUMBER & PHASE: 11000200501
CONTRACT NO.: 11-2T1811

DISREGARD PRINTS BEARING EARLIER REVISION DATES

REVISION DATES 04-12-11 06-20-11 02-16-11 03-22-11

SHEET 5 OF 20

FILE => f_57-0639-g-bent_lo.dgn

USERNAME => s124096 DATE PLOTTED => 09-DEC-2011 TIME PLOTTED => 12:38

DIST	COUNTY	ROUTE	POST MILES TOTAL PROJECT	SHEET No.	TOTAL SHEETS
11	SD	54,805	1.8,5.5/9.4	600	635

Tony Skreslet 8-25-11
REGISTERED CIVIL ENGINEER DATE

12-5-11
PLANS APPROVAL DATE

REGISTERED PROFESSIONAL ENGINEER TONY SKRESLET No. C50676 Exp. 09-30-11 CIVIL STATE OF CALIFORNIA

The State of California or its officers or agents shall not be responsible for the accuracy or completeness of electronic copies of this plan sheet.

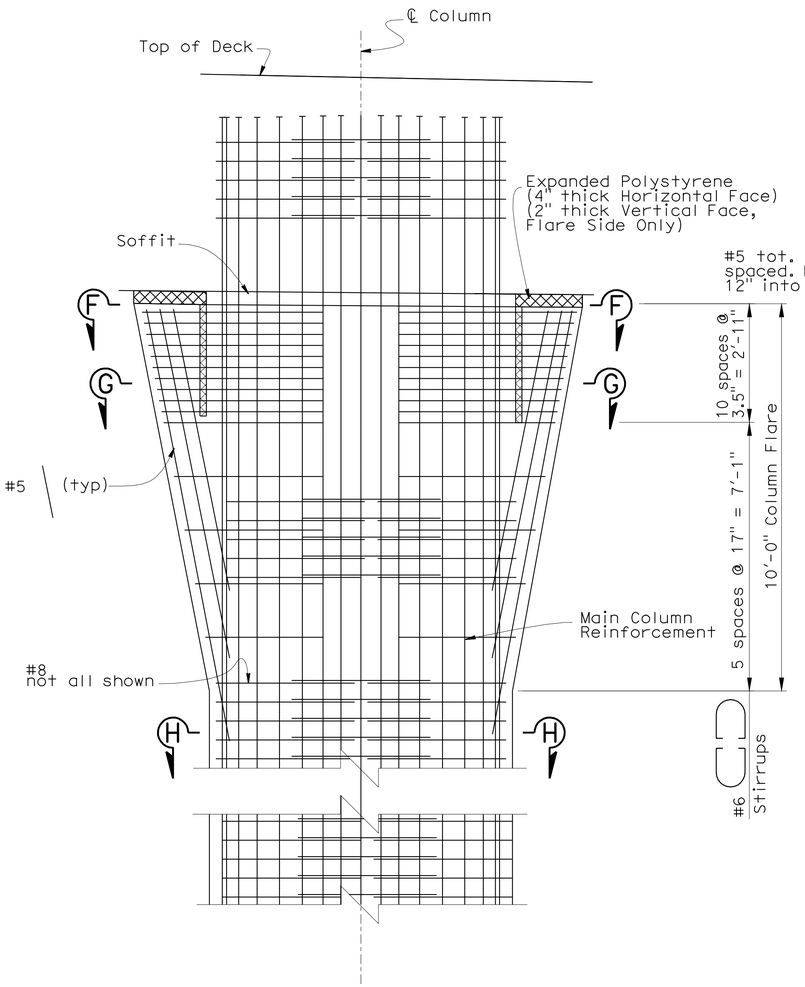

COLUMN ELEVATION
½" = 1'-0"

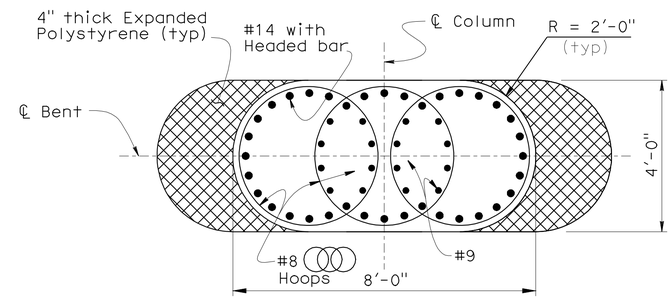

SECTION F-F
½" = 1'-0"

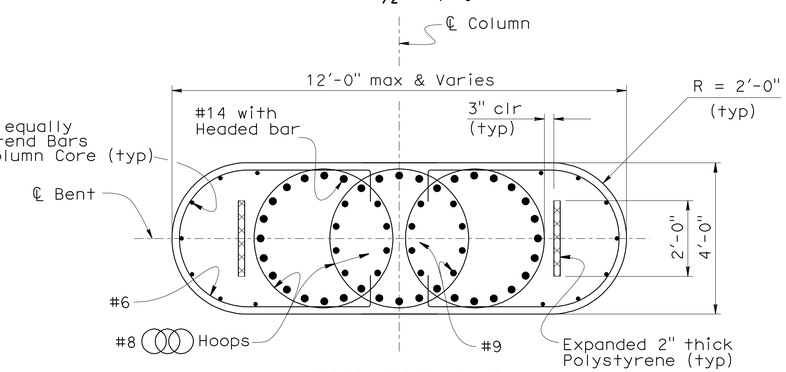

SECTION G-G
½" = 1'-0"

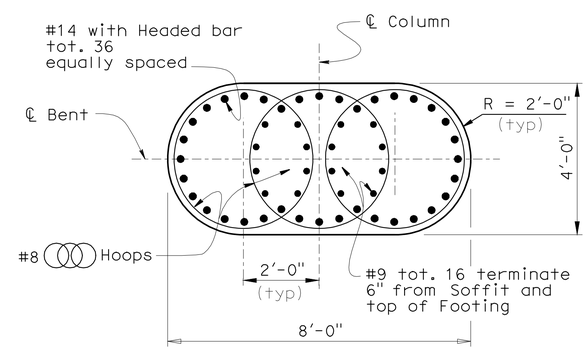

SECTION H-H
½" = 1'-0"

NOTE: Stagger Mechanical Coupler

NOTE:
THE CONTRACTOR SHALL VERIFY ALL
CONTROLLING FIELD DIMENSIONS
BEFORE ORDERING OR FABRICATING
ANY MATERIAL.

DESIGN	BY P. A. Peterson	CHECKED J. M. Peterson	
DETAILS	BY PAP/ T. Nguyen	CHECKED J. M. Peterson	
QUANTITIES	BY P. A. Peterson	CHECKED J. M. Peterson	

STATE OF CALIFORNIA
DEPARTMENT OF TRANSPORTATION

DIVISION OF ENGINEERING SERVICES
STRUCTURE DESIGN
DESIGN BRANCH 14

BRIDGE NO. 57-0639
POST MILE 9.07

SWEETWATER ROAD UC (WIDEN)
BENT DETAILS

STRUCTURES DESIGN DETAIL SHEET (ENGLISH) (REV. 09-01-10)

ORIGINAL SCALE IN INCHES FOR REDUCED PLANS 0 1 2 3

UNIT: 3613
PROJECT NUMBER & PHASE: 11000200501
CONTRACT NO.: 11-2T1811

DISREGARD PRINTS BEARING EARLIER REVISION DATES → 04-12-11 5-12-11 06-17-11 03-16-11

SHEET 6 OF 20

FILE => f_57-0639-h-bent_dt.dgn

USERNAME => s124496 DATE PLOTTED => 09-DEC-2011 TIME PLOTTED => 12:38