Dist	COUNTY	ROUTE	POST MILES TOTAL PROJECT	SHEET No.	TOTAL SHEETS
11	SD	8	11.2,14.7	1	21

INDEX OF PLANS

SHEET NO.	DESCRIPTION
1	TITLE AND LOCATION MAP
2	TYPICAL CROSS SECTIONS
3	PROJECT CONTROL
4-5	LAYOUT
6	CONSTRUCTION DETAILS
7	TEMPORARY WATER POLUTION CONTROL PLAN
8-10	DRAINAGE PLAN, PROFILES AND QUANTITIES
11	CONSTRUCTION AREA SIGNS
12	STAGE CONSTRUCTION PLAN
13	PAVEMENT DELINEATION QUANTITIES
14	SUMMARY OF QUANTITIES
15-21	REVISED AND NEW STANDARD PLANS

THE STANDARD PLANS LIST APPLICABLE TO THIS CONTRACT IS INCLUDED IN THE NOTICE TO BIDDERS AND SPECIAL PROVISIONS BOOK.

STATE OF CALIFORNIA

DEPARTMENT OF TRANSPORTATION

PROJECT PLANS FOR CONSTRUCTION ON

STATE HIGHWAY

IN SAN DIEGO COUNTY

IN LA MESA AND EL CAJON AT 0.1 MILE EAST OF EL CAJON BOULEVARD OFF-RAMP OVERCROSSING AND AT 0.1 MILE EAST OF MAIN STREET UNDERCROSSING

TO BE SUPPLEMENTED BY STANDARD PLANS DATED MAY 2006

LOCATION MAP

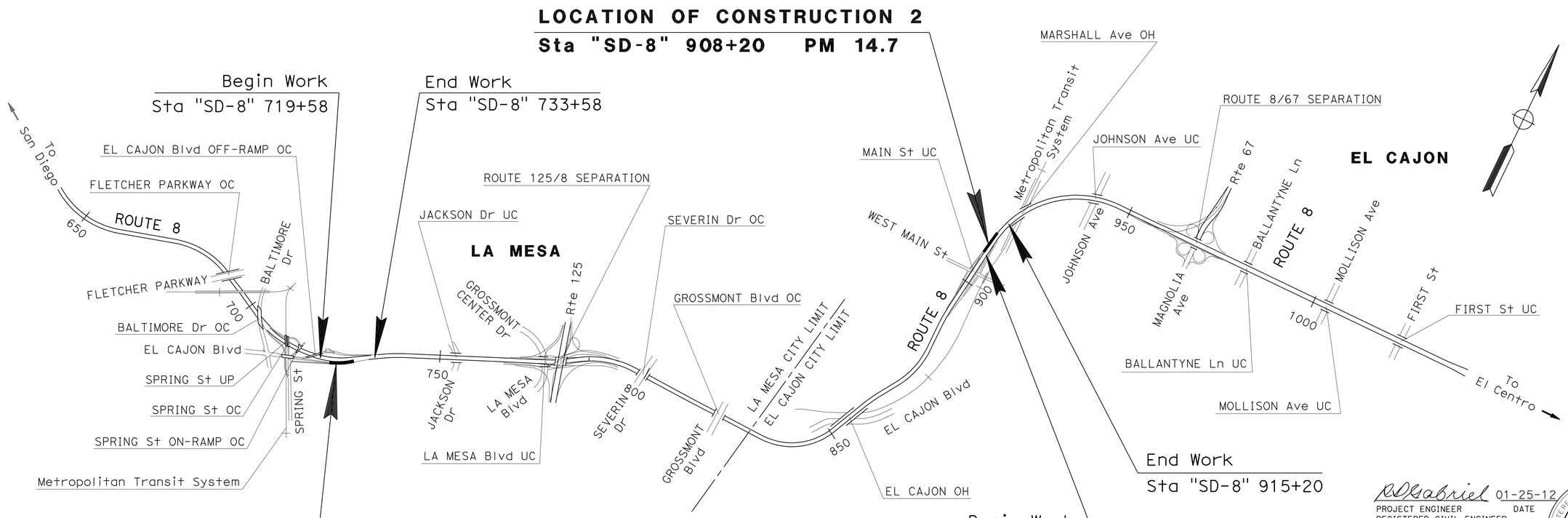

PROJECT MANAGER KAZIM MAMDANI

DESIGN ENGINEER RUDOLFO D. GABRIEL

THE CONTRACTOR SHALL POSSESS THE CLASS (OR CLASSES) OF LICENSE AS SPECIFIED IN THE "NOTICE TO BIDDERS."

NO SCALE

RDGabriel 01-25-12
PROJECT ENGINEER DATE
REGISTERED CIVIL ENGINEER

February 6, 2012
PLANS APPROVAL DATE

REGISTERED PROFESSIONAL ENGINEER RODOLFO D. GABRIEL No. 67462 Exp. 06-30-13 CIVIL STATE OF CALIFORNIA

THE STATE OF CALIFORNIA OR ITS OFFICERS OR AGENTS SHALL NOT BE RESPONSIBLE FOR THE ACCURACY OR COMPLETENESS OF SCANNED COPIES OF THIS PLAN SHEET.

CONTRACT No.	11-405004
PROJECT ID	1100020017

LAST REVISION 01-26-12 DATE PLOTTED => 08-FEB-2012 TIME PLOTTED => 11:42

Dist	COUNTY	ROUTE	POST MILES TOTAL PROJECT	SHEET No.	TOTAL SHEETS
11	SD	8	11.2,14.7	2	21

RDGabriel 01-25-12
REGISTERED CIVIL ENGINEER DATE

02-06-12
PLANS APPROVAL DATE

REGISTERED PROFESSIONAL ENGINEER
RODOLFO D. GABRIEL
No. 67462
Exp. 06-30-13
CIVIL
STATE OF CALIFORNIA

THE STATE OF CALIFORNIA OR ITS OFFICERS OR AGENTS SHALL NOT BE RESPONSIBLE FOR THE ACCURACY OR COMPLETENESS OF SCANNED COPIES OF THIS PLAN SHEET.

NOTES:

1. DIMENSIONS OF THE STRUCTURAL SECTIONS ARE SUBJECT TO TOLERANCES SPECIFIED IN THE STANDARD SPECIFICATIONS.
2. FOG SEAL COAT SHALL BE APPLIED TO ALL HMA SURFACES EXCEPT TRAVELED WAYS.

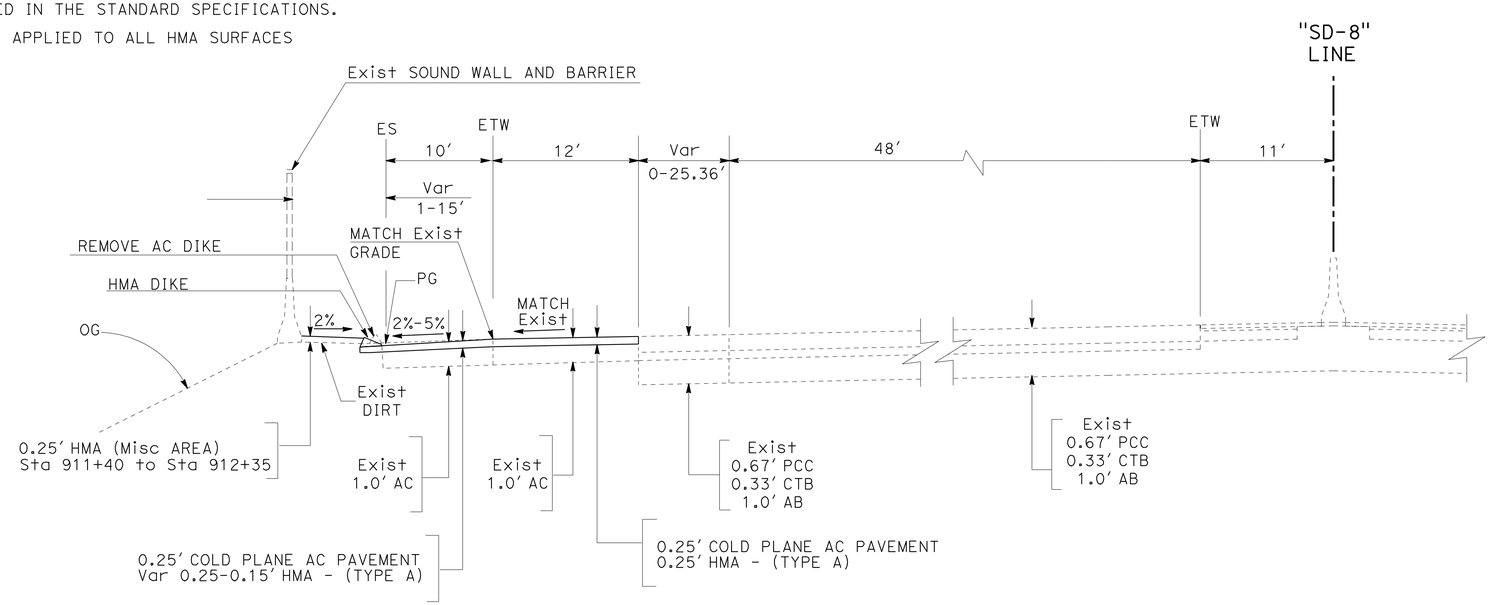

ROUTE 8

LOCATION 2

Sta 908+80 TO Sta 912+35.24

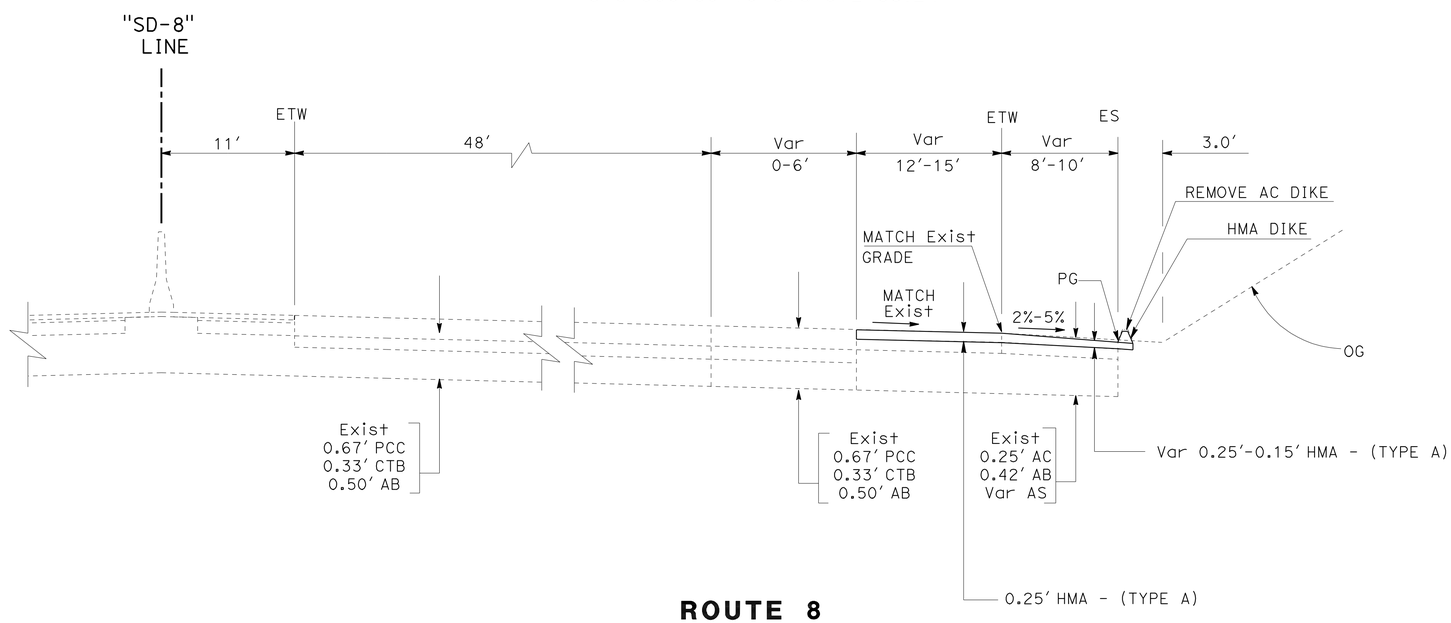

ROUTE 8

LOCATION 1

Sta 726+66 TO Sta 732+00

TYPICAL CROSS SECTIONS

NO SCALE

X-1

STATE OF CALIFORNIA - DEPARTMENT OF TRANSPORTATION
Caltrans® DESIGN

FUNCTIONAL SUPERVISOR: KAZIM MAMDANI
CALCULATED-DESIGNED BY: RUDOLFO D. GABRIEL
CHECKED BY: KAZIM MAMDANI
REVISED BY
DATE REVISED

LAST REVISION 01-27-12
DATE PLOTTED => 08-FEB-2012
TIME PLOTTED => 11:42

Dist	COUNTY	ROUTE	POST MILES TOTAL PROJECT	SHEET No.	TOTAL SHEETS
11	SD	8	11.2,14.7	3	21

01-25-12
PROFESSIONAL LAND SURVEYOR DATE

02-06-12
PLANS APPROVAL DATE

PROFESSIONAL LAND SURVEYOR MARK D. PHELAN L.S.7111 EXP:12-31-12 STATE OF CALIFORNIA

THE STATE OF CALIFORNIA OR ITS OFFICERS OR AGENTS SHALL NOT BE RESPONSIBLE FOR THE ACCURACY OR COMPLETENESS OF SCANNED COPIES OF THIS PLAN SHEET.

NOTE:

FOR COMPLETE PROJECT CONTROL DATA, SEE THE SURVEY RECORDS ON FILE IN THE SURVEYS DEPARTMENT AT THE DISTRICT OFFICE.

BASIS OF BEARINGS AND COORDINATES

FOR THIS PROJECT IS THE CALIFORNIA COORDINATE SYSTEM OF 1983, HPGN EPOCH ADJUSTMENT [CCS 83 (1991.35)], ZONE 6. 3RD ORDER PROJECT CONTROL STATIONS WERE ESTABLISHED IN AUGUST 2010 ACCORDING TO CRITERIA SET FORTH IN THE FEDERAL GEODETIC CONTROL SUBCOMMITTEE'S "GEOMETRIC GEODETIC ACCURACY STANDARDS AND SPECIFICATIONS FOR USING GPS RELATIVE POSITIONING TECHNIQUES" REPRINTED AUGUST 1, 1989.

LOCATION 1 - EL CAJON Blvd.

BASIS OF COORDINATES

THIS GPS RTK SURVEY WAS CONSTRAINED TO THE FOLLOWING 2ND ORDER HPGN STATIONS: "8-8.44", "125-18.6" AND "125-15.09".

BASIS OF ELEVATIONS

FOR THIS PROJECT IS THE NORTH AMERICAN VERTICAL DATUM OF 1988 (NAVD88). ELEVATIONS WERE ESTABLISHED BY GPS FAST STATIC SURVEY CONSTRAINING TO "8-8.44", "125-18.6", AND "125-15.09".

LOCATION 2 - WEST MAIN STREET

BASIS OF COORDINATES

THIS GPS RTK SURVEY WAS CONSTRAINED TO THE FOLLOWING HPGN STATION: "8-15.85".

BASIS OF ELEVATIONS

FOR THIS PROJECT IS THE NORTH AMERICAN VERTICAL DATUM OF 1988 (NAVD88). ELEVATIONS WERE ESTABLISHED BY DIFFERENTIAL LEVEL CONSTRAINING TO STATION "8-15.85".

IN THE EVENT GPS MACHINE CONTROL/GUIDANCE IS USED FOR THIS PROJECT, THE CONTRACTOR SHALL CONTACT OR MEET WITH DISTRICT 11'S LAND SURVEY DIVISION TO OBTAIN THE CONTROL NECESSARY TO ESTABLISH A PROJECT CALIBRATION COMPATIBLE FOR ALL USERS.

ABBREVIATIONS:

CADT	CALIFORNIA DEPARTMENT OF TRANSPORTATION
CDH	CALIFORNIA DEPARTMENT OF HIGHWAYS
GPS	GLOBAL POSITIONING SYSTEM
IP	IRON PIPE
PK	PARKER-KALON
RTK	REAL TIME KINEMATIC

LEGEND:

(3) 3RD ORDER STATION

CONTROL FOR DESIGN AND CONSTRUCTION

STATION DESIGNATION	ORDER	NORTHING	EASTING	ELEVATION (Ft)	DESCRIPTION
LOCATION 1 - EL CAJON Blvd					
8 11.21	3RD	1,861,178.54	6,325,061.28	532.88	PK WASHER IN AC DIKE
8 11.32	3RD	1,861,343.76	6,325,465.78	559.62	2 X 2 HUB w/TACK
8-11.35	3RD	1,861,914.50	6,325,953.86	560.27	2¼" CDH DISK IN CONCRETE
LOCATION 2 - WEST MAIN STREET					
8-14.7	3RD	1,870,118.78	6,338,160.93	498.60	2" IP w/CADT DISK
8 14.78	3RD	1,870,555.04	6,338,205.78	494.51	2 X 2 HUB w/TACK
SAN MIGUEL	3RD	1,833,897.08	6,350,560.14	N/A	REFERENCE TOWER w/FLASHING BEACON

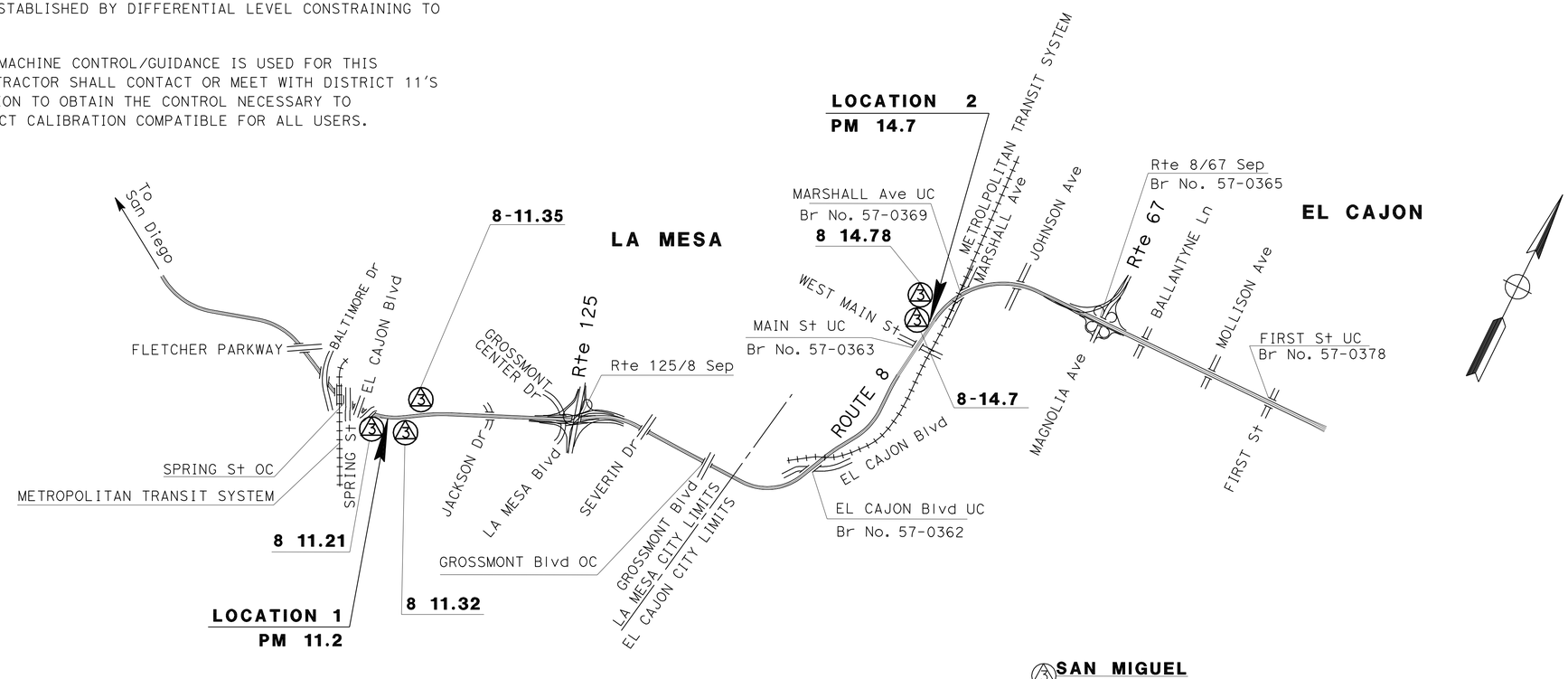

APPROVED FOR PROJECT CONTROL INFORMATION ONLY

PROJECT CONTROL

NO SCALE

PC-1

STATE OF CALIFORNIA - DEPARTMENT OF TRANSPORTATION
Caltrans® LAND SURVEYS DIVISION

FUNCTIONAL SUPERVISOR: BRUCE URQUHART
CALCULATED-DESIGNED BY: MARK PHELAN
CHECKED BY: NED SALMAN
REVISED BY
DATE REVISED

LAST REVISION 01-27-12
DATE PLOTTED => 08-FEB-2012
TIME PLOTTED => 11:42

Dist	COUNTY	ROUTE	POST MILES TOTAL PROJECT	SHEET No.	TOTAL SHEETS
11	SD	8	11.2,14.7	4	21

RDGabriel 01-25-12
REGISTERED CIVIL ENGINEER DATE

02-06-12
PLANS APPROVAL DATE

REGISTERED PROFESSIONAL ENGINEER
RODOLFO D. GABRIEL
No. 67462
Exp. 06-30-13
CIVIL
STATE OF CALIFORNIA

THE STATE OF CALIFORNIA OR ITS OFFICERS OR AGENTS SHALL NOT BE RESPONSIBLE FOR THE ACCURACY OR COMPLETENESS OF SCANNED COPIES OF THIS PLAN SHEET.

NOTE:

1. FOR ACCURATE RIGHT OF WAY DATA, CONTACT RIGHT OF WAY ENGINEERING AT THE DISTRICT OFFICE.
2. ALL ELEVATIONS ARE BASED ON NAVD 1988 DATUM

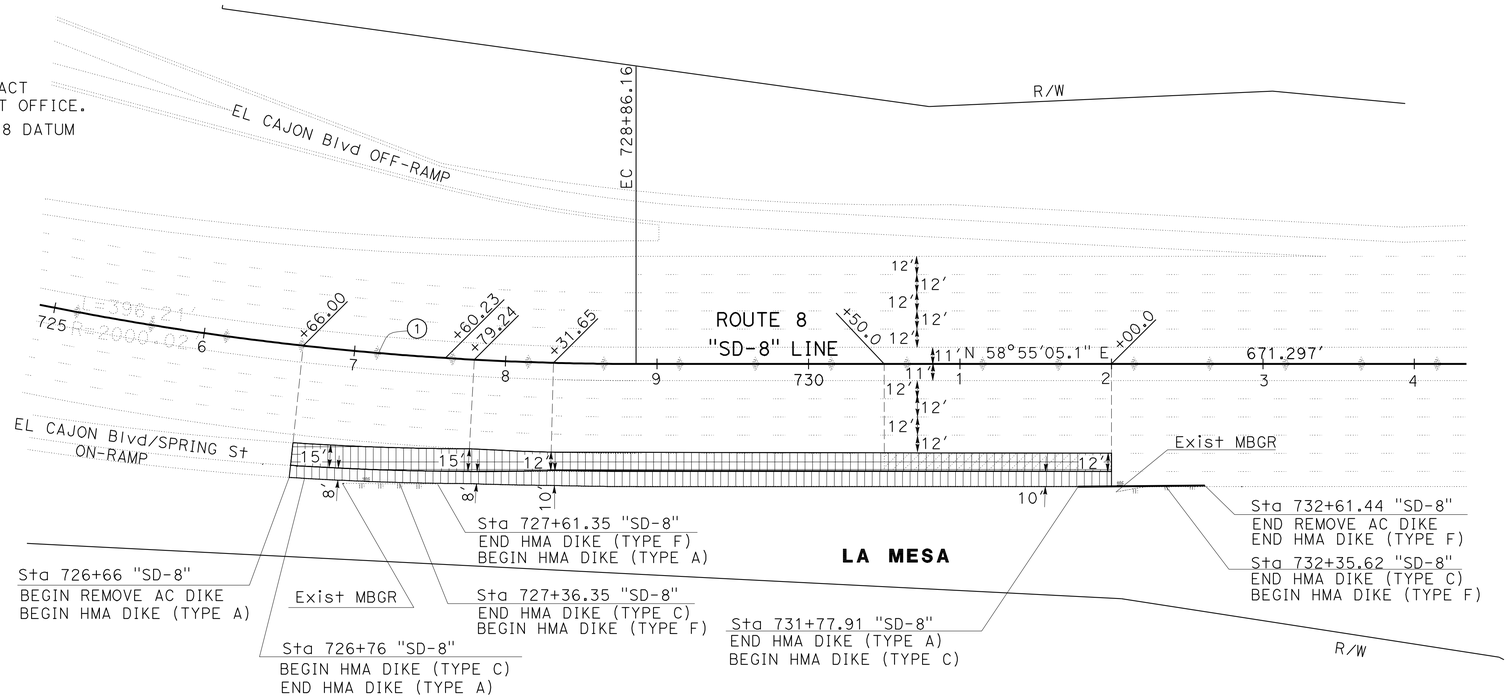

LEGEND:

- Var 0.25'-0.15' HMA - (TYPE A)
- COLD PLANE AC PAVEMENT (0.25') 0.25' HMA - (TYPE A)
- COLD PLANE AC PAVEMENT (0.25') Var 0.25'-0.15' HMA - (TYPE A)
- 0.25' HMA (Misc AREA)
- 0.25' HMA - (TYPE A)

CURVE DATA

No.	R	Δ	T	L
1	2000.02'	6°32'26"	114.28'	643.65'

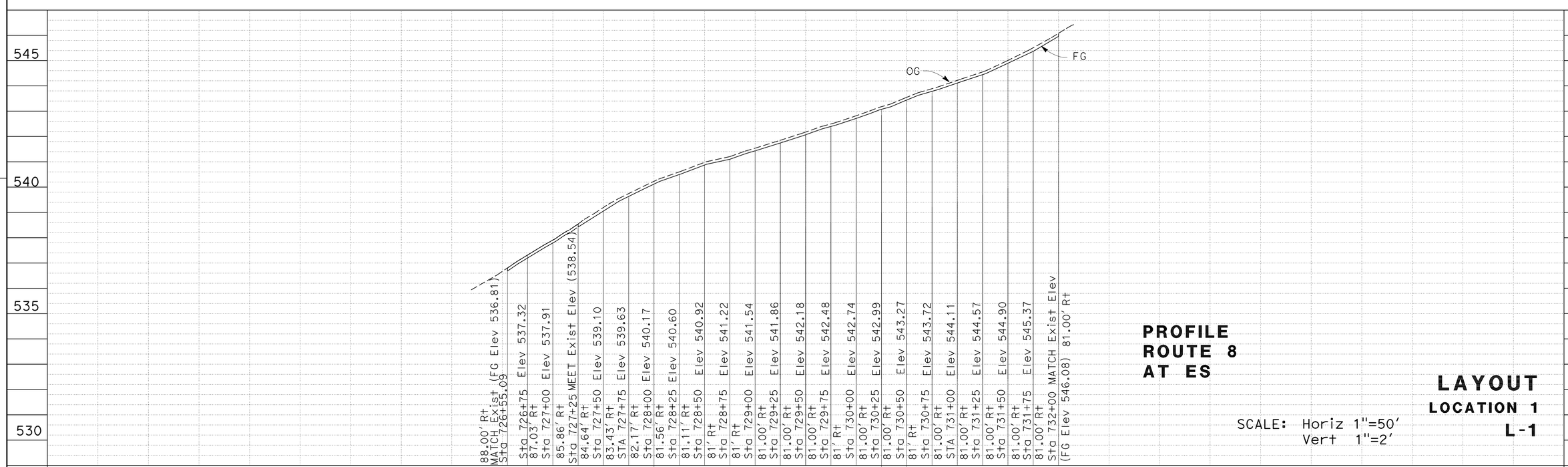

PROFILE ROUTE 8 AT ES

SCALE: Horiz 1"=50'
Vert 1"=2'

LAYOUT
LOCATION 1
L-1

STATE OF CALIFORNIA - DEPARTMENT OF TRANSPORTATION
Caltrans
DESIGN

FUNCTIONAL SUPERVISOR: KAZIM MAMDANI
CALCULATED-DESIGNED BY: RUDOLFO D. GABRIEL
CHECKED BY: GERRY CRUZ
REVISED BY
DATE REVISED

LAST REVISION 01-27-12
DATE PLOTTED => 08-FEB-2012
TIME PLOTTED => 11:42

Dist	COUNTY	ROUTE	POST MILES TOTAL PROJECT	SHEET No.	TOTAL SHEETS
11	SD	8	11.2,14.7	5	21

RDGabriel 01-25-12
REGISTERED CIVIL ENGINEER DATE

02-06-12
PLANS APPROVAL DATE

REGISTERED PROFESSIONAL ENGINEER
RODOLFO D. GABRIEL
No. 67462
Exp. 06-30-13
CIVIL
STATE OF CALIFORNIA

THE STATE OF CALIFORNIA OR ITS OFFICERS OR AGENTS SHALL NOT BE RESPONSIBLE FOR THE ACCURACY OR COMPLETENESS OF SCANNED COPIES OF THIS PLAN SHEET.

NOTES:

FOR ACCURATE RIGHT OF WAY DATA, CONTACT
RIGHT OF WAY ENGINEERING AT THE DISTRICT OFFICE.

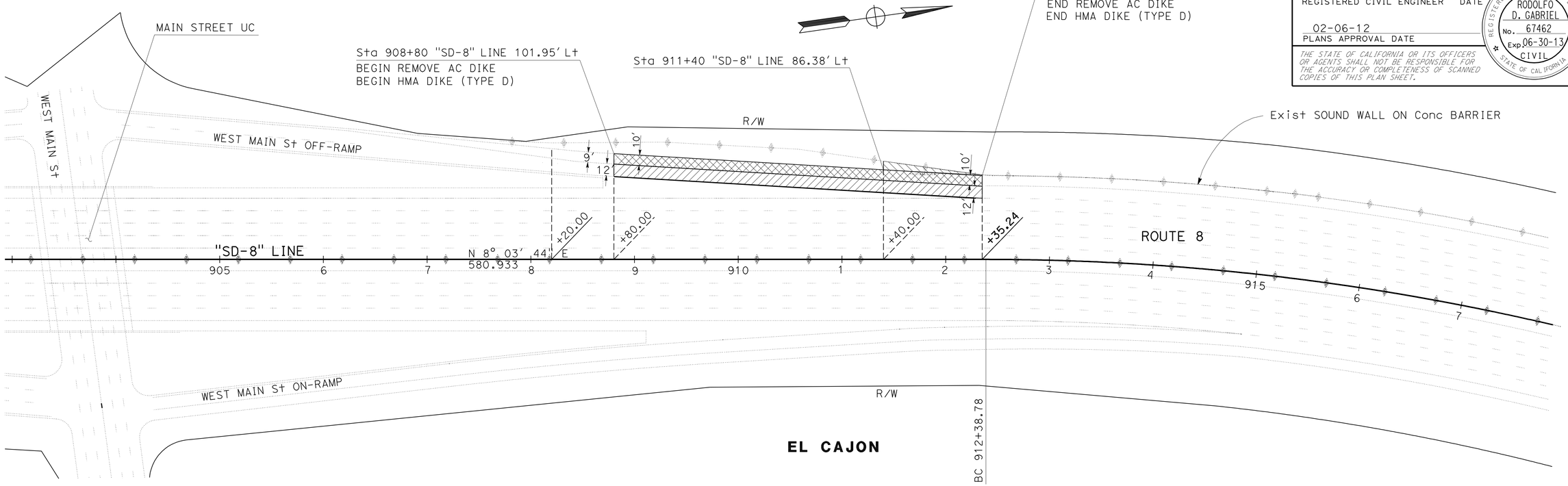

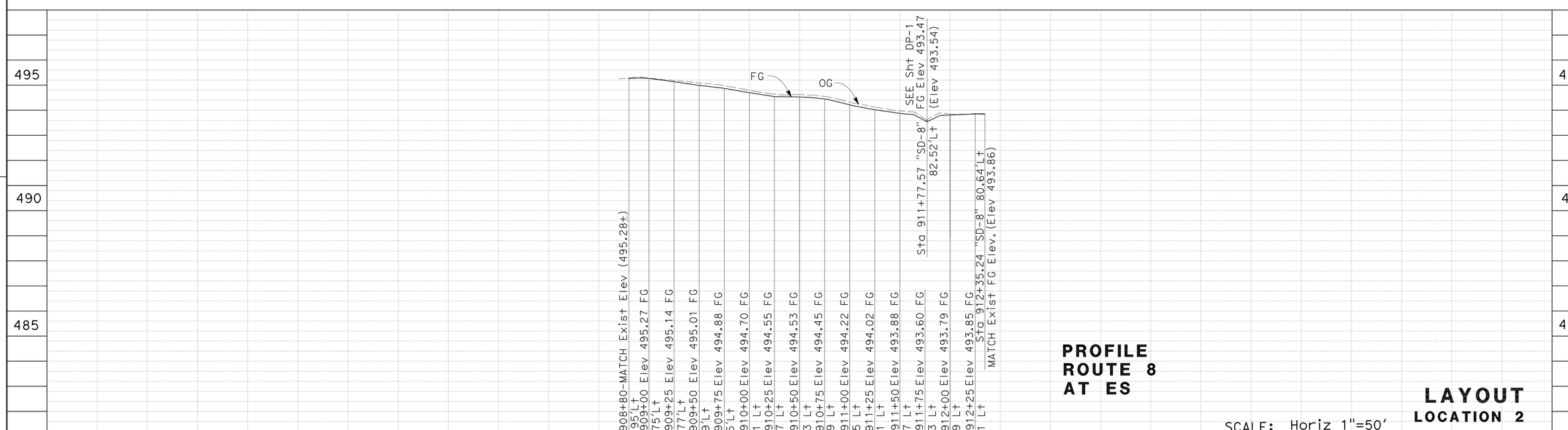

PROFILE ROUTE 8 AT ES

SCALE: Horiz 1"=50'
Vert 1"=2'

LAYOUT
LOCATION 2
L-2

REVISED BY	
DATE REVISED	
RUDOLFO D. GABRIEL	
GERRY CRUZ	
CALCULATED-DESIGNED BY	
CHECKED BY	
FUNCTIONAL SUPERVISOR	
KAZIM MAMDANI	

STATE OF CALIFORNIA - DEPARTMENT OF TRANSPORTATION
Caltrans
DESIGN

LAST REVISION 01-27-12
DATE PLOTTED => 08-FEB-2012
TIME PLOTTED => 11:42

Dist	COUNTY	ROUTE	POST MILES TOTAL PROJECT	SHEET No.	TOTAL SHEETS
11	SD	8	11.2,14.7	6	21

RDGabriel 01-25-12
REGISTERED CIVIL ENGINEER DATE

02-06-12
PLANS APPROVAL DATE

REGISTERED PROFESSIONAL ENGINEER
RODOLFO D. GABRIEL
No. 67462
Exp. 06-30-13
CIVIL
STATE OF CALIFORNIA

THE STATE OF CALIFORNIA OR ITS OFFICERS OR AGENTS SHALL NOT BE RESPONSIBLE FOR THE ACCURACY OR COMPLETENESS OF SCANNED COPIES OF THIS PLAN SHEET.

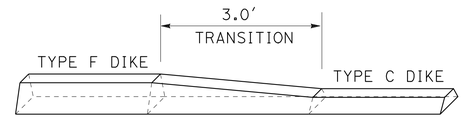

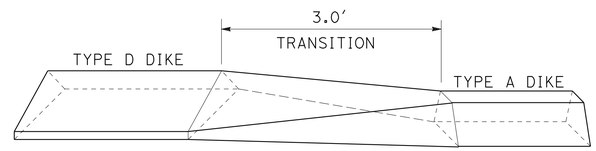

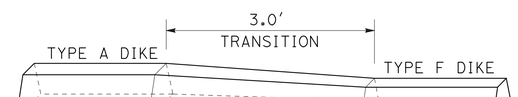

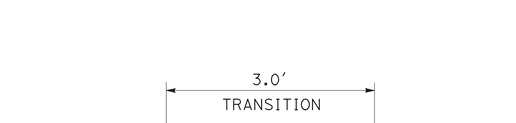

DIKE TRANSITION DETAIL

CONSTRUCTION DETAILS

NO SCALE

C-1

REVISED BY | DATE REVISED
RUDOLFO D. GABRIEL | GERRY CRUZ
CALCULATED-DESIGNED BY | CHECKED BY
FUNCTIONAL SUPERVISOR
KAZIM MAMDANI

STATE OF CALIFORNIA - DEPARTMENT OF TRANSPORTATION
Caltrans
DESIGN

LAST REVISION 01-27-12 | DATE PLOTTED => 08-FEB-2012 | TIME PLOTTED => 11:43

Dist	COUNTY	ROUTE	POST MILES TOTAL PROJECT	SHEET No.	TOTAL SHEETS
11	SD	8	11.2,14.7	7	21

RDGabriel 01-25-12
REGISTERED CIVIL ENGINEER DATE

02-06-12
PLANS APPROVAL DATE

REGISTERED PROFESSIONAL ENGINEER
RODOLFO D. GABRIEL
No. 67462
Exp. 06-30-13
CIVIL
STATE OF CALIFORNIA

THE STATE OF CALIFORNIA OR ITS OFFICERS OR AGENTS SHALL NOT BE RESPONSIBLE FOR THE ACCURACY OR COMPLETENESS OF SCANNED COPIES OF THIS PLAN SHEET.

NOTE:

FOR ACCURATE RIGHT OF WAY DATA, CONTACT
RIGHT OF WAY ENGINEERING AT THE DISTRICT OFFICE.

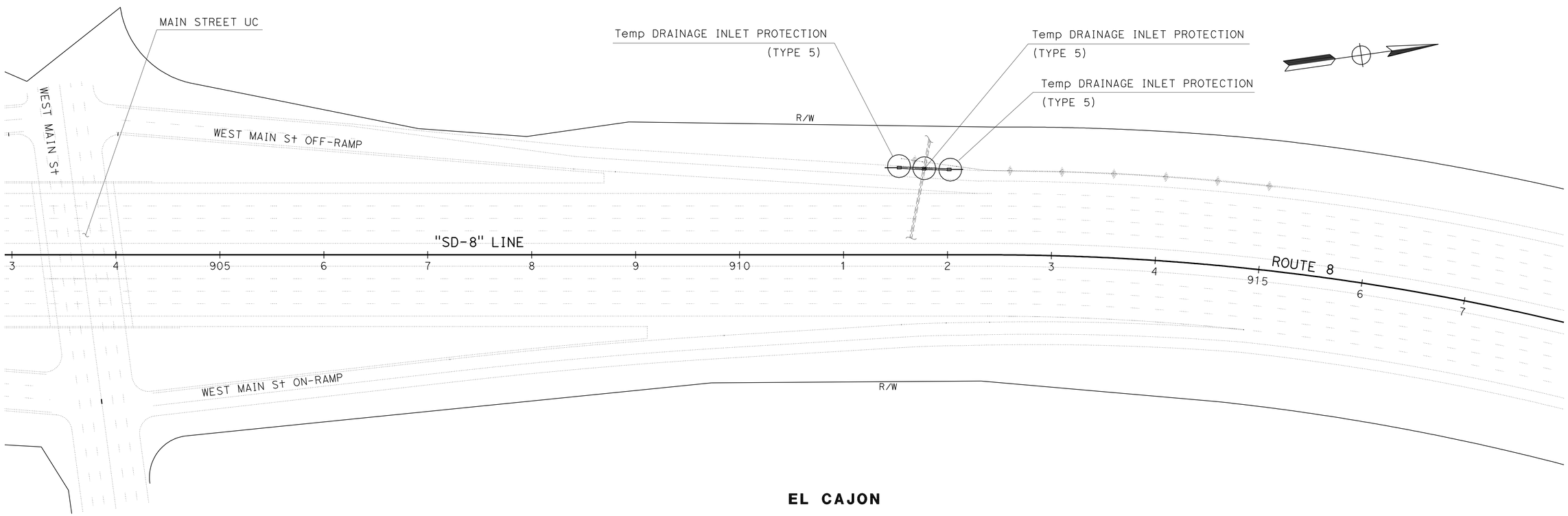

APPROVED FOR TEMPORARY WATER POLLUTION CONTROL WORK ONLY

SCALE: 1" = 50'

TEMPORARY WATER POLLUTION CONTROL PLAN

(LOCATION 1)

WPC-1

REVISED BY | DATE REVISED

RUDY GABRIEL | GERRY CRUZ

CALCULATED-DESIGNED BY | CHECKED BY

FUNCTIONAL SUPERVISOR

KAZIM MAMDANI

STATE OF CALIFORNIA - DEPARTMENT OF TRANSPORTATION

Caltrans

DESIGN

LAST REVISION 01-27-12 | DATE PLOTTED => 08-FEB-2012 | TIME PLOTTED => 11:43

Dist	COUNTY	ROUTE	POST MILES TOTAL PROJECT	SHEET No.	TOTAL SHEETS
11	SD	8	11.2,14.7	8	21

RDGabriel 01-25-12
REGISTERED CIVIL ENGINEER DATE

02-06-12
PLANS APPROVAL DATE

REGISTERED PROFESSIONAL ENGINEER
RODOLFO D. GABRIEL
No. 67462
Exp. 06-30-13
CIVIL
STATE OF CALIFORNIA

THE STATE OF CALIFORNIA OR ITS OFFICERS OR AGENTS SHALL NOT BE RESPONSIBLE FOR THE ACCURACY OR COMPLETENESS OF SCANNED COPIES OF THIS PLAN SHEET.

NOTE:

FOR ACCURATE RIGHT OF WAY DATA, CONTACT RIGHT OF WAY ENGINEERING AT THE DISTRICT OFFICE.

LEGEND:

(x) = DRAINAGE SYSTEM

(x) = DRAINAGE UNIT

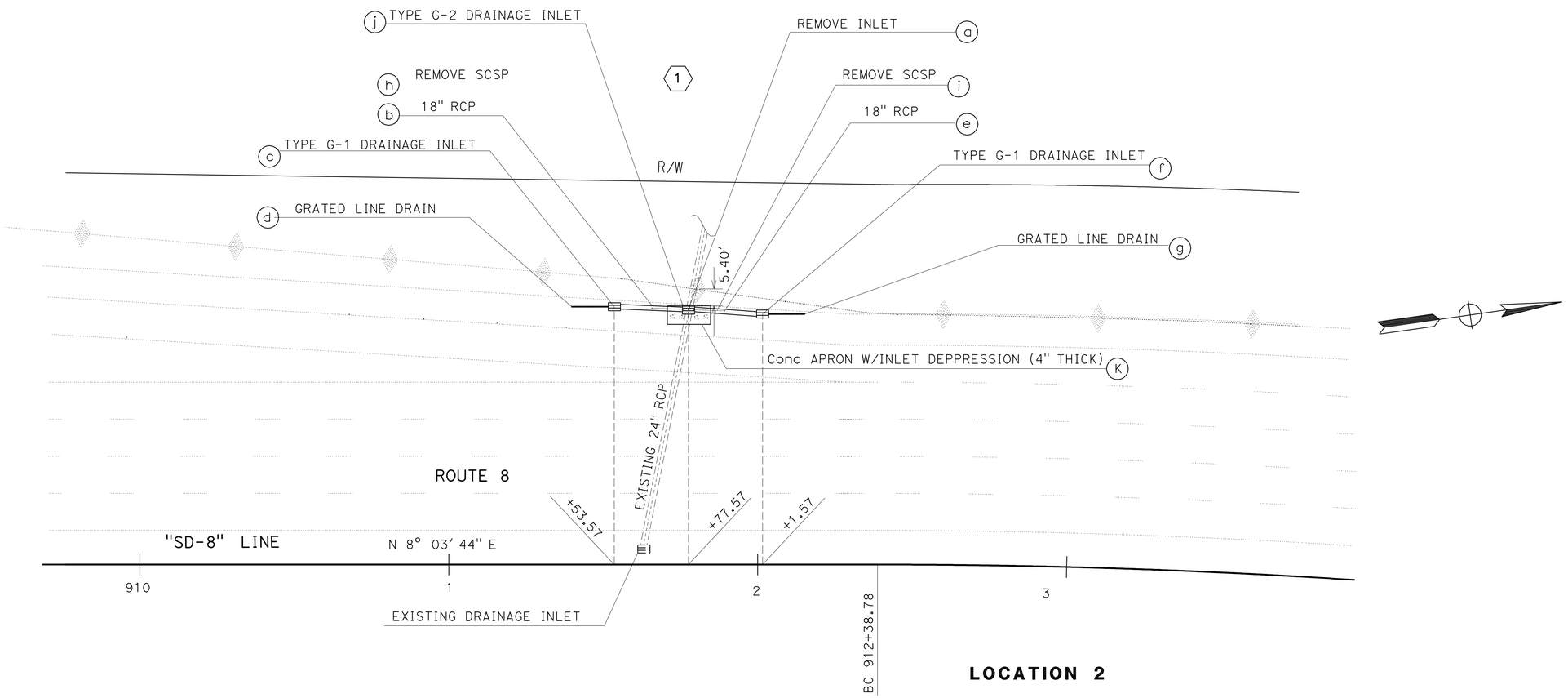

LOCATION 2

DRAINAGE PLAN

SCALE: 1"= 20'

D-1

APPROVED FOR DRAINAGE WORK ONLY

STATE OF CALIFORNIA - DEPARTMENT OF TRANSPORTATION
DESIGN

FUNCTIONAL SUPERVISOR: KAZIM MAMDANI
CALCULATED-DESIGNED BY: RUDOLFO D. GABRIEL
CHECKED BY: GERRY CRUZ
REVISED BY
DATE REVISED

LAST REVISION 01-27-12
DATE PLOTTED => 08-FEB-2012
TIME PLOTTED => 11:43

Dist	COUNTY	ROUTE	POST MILES TOTAL PROJECT	SHEET No.	TOTAL SHEETS
11	SD	8	11.2,14.7	9	21

RDGabriel 01-25-12
REGISTERED CIVIL ENGINEER DATE

02-06-12
PLANS APPROVAL DATE

REGISTERED PROFESSIONAL ENGINEER
RODOLFO D. GABRIEL
No. 67462
Exp. 06-30-13
CIVIL
STATE OF CALIFORNIA

THE STATE OF CALIFORNIA OR ITS OFFICERS OR AGENTS SHALL NOT BE RESPONSIBLE FOR THE ACCURACY OR COMPLETENESS OF SCANNED COPIES OF THIS PLAN SHEET.

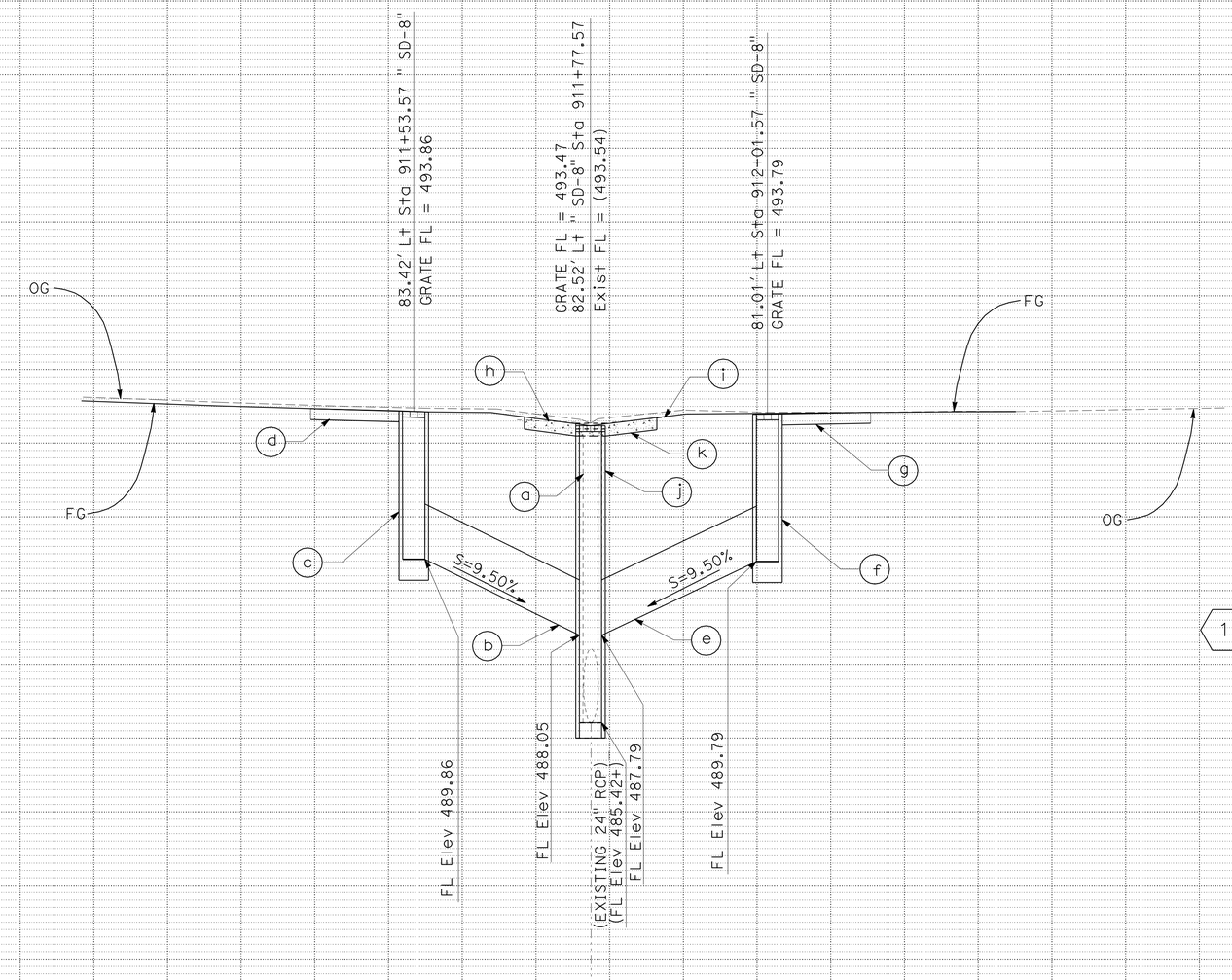

1 DRAINAGE SYSTEM

a REMOVE Type ODI INLET W/18" CSP RISER
b 18" RCP, L=21'
c G-1 INLET W/24-12X GRATE, H=4.0'
d GRATED LINE DRAIN, L=12' D=12" W/REMOVABLE GRATE
e 18" RCP, L=21'
f G-1 INLET W/24-12X GRATE, H=4.0'
g GRATED LINE DRAIN, L=12' D=12" W/REMOVABLE GRATE
h REMOVE SCSP, L=10'
i REMOVE SCSP,L=10'
j G-2 INLET W/24X12 GRATE, H=8.1'
k Conc APRON W/INLET DEPRESSION
SEE Std PLAN D78A, L=17' W=6' T=4"

DRAINAGE PROFILES

SCALE: Horiz 1" = 10'
Vert 1" = 2'

DP-1

STATE OF CALIFORNIA - DEPARTMENT OF TRANSPORTATION
Caltrans®
DESIGN
FUNCTIONAL SUPERVISOR: KAZIM MAMDANI
CALCULATED-DESIGNED BY: RUDOLFO D. GABRIEL
CHECKED BY: GERRY CRUZ
REVISED BY
DATE REVISED

LAST REVISION 01-27-12 | DATE PLOTTED => 08-FEB-2012 | TIME PLOTTED => 11:43

Dist	COUNTY	ROUTE	POST MILES TOTAL PROJECT	SHEET No.	TOTAL SHEETS
11	SD	8	11.2,14.7	10	21

RDGabriel 01-25-12
REGISTERED CIVIL ENGINEER DATE

02-06-12
PLANS APPROVAL DATE

REGISTERED PROFESSIONAL ENGINEER
RODOLFO D. GABRIEL
No. 67462
Exp. 06-30-13
CIVIL
STATE OF CALIFORNIA

THE STATE OF CALIFORNIA OR ITS OFFICERS OR AGENTS SHALL NOT BE RESPONSIBLE FOR THE ACCURACY OR COMPLETENESS OF SCANNED COPIES OF THIS PLAN SHEET.

DRAINAGE QUANTITIES

DRAINAGE SHEET No.	DRAINAGE SYSTEM No.	DRAINAGE UNIT	REMOVE INLET (N) (EA)	CONCRETE APRON (CY)	MINOR CONCRETE (MINOR STRUCTURE) (CY)	FRAME AND GRATE (TYPE 24-12X) (EA)	MISCELLANEOUS IRON & STEEL (LB)	HEIGHT OF INLET (N) (LF)	18" REINFORCED CONCRETE PIPE (LF)	GRATED LINE DRAIN (LF)	REMOVE SCSP (N) (LF)	DESCRIPTION	STATION	DRAINAGE SHEET No.	DRAINAGE SYSTEM No.	DRAINAGE UNIT
D-1	1	a	1									REMOVE INLET TYPE ODI W/18" CSP RISER	911+77.57 "SD 8 LINE"	D-1	1	a
		b							21			18" RCP				b
		c			1.17	1	239.0	4.0				DRAINAGE INLET (TYPE G-1)	911+53.57 "SD 8 LINE"			c
		d								12		GRATED LINE DRAIN W/REMOVABLE GRATE, PRESLOPED D=12"				d
		e							21			18" RCP				e
		f			1.17	1	239.0	4.0				DRAINAGE INLET (TYPE G-1)	912+01.57 "SD 8 LINE"			f
		g								12		GRATED LINE DRAIN W/REMOVABLE				g
		h									10	GRATE PRESLOPED D=12" REMOVE SCSP				h
		i									10	REMOVE SCSP				i
		j			3.50	1	239.0	8.1				DRAINAGE INLET (TYPE G-2)	911+77.57 "SD 8 LINE"			j
		k		1.3								CONCRETE APRON				k
	TOTAL			1.3	5.84		717.0		42	24						

(N) = NOT A SEPARATE PAY ITEM, FOR INFORMATION ONLY.

DRAINAGE QUANTITIES

DQ-1

STATE OF CALIFORNIA - DEPARTMENT OF TRANSPORTATION
Caltrans DESIGN

FUNCTIONAL SUPERVISOR: KAZIM MAMDANI
CALCULATED-DESIGNED BY: RUDOLFO D. GABRIEL
CHECKED BY: GERRY CRUZ
REVISED BY
DATE REVISED

LAST REVISION 01-27-12
DATE PLOTTED => 08-FEB-2012
TIME PLOTTED => 11:43

Dist	COUNTY	ROUTE	POST MILES TOTAL PROJECT	SHEET No.	TOTAL SHEETS
11	SD	8	11.2/14.7	11	21

REGISTERED CIVIL ENGINEER 01-25-12 DATE

02-06-12
PLANS APPROVAL DATE

REGISTERED PROFESSIONAL ENGINEER SHAHIN T. ADIBI No. 54839 Exp. 06-30-12 CIVIL STATE OF CALIFORNIA

THE STATE OF CALIFORNIA OR ITS OFFICERS OR AGENTS SHALL NOT BE RESPONSIBLE FOR THE ACCURACY OR COMPLETENESS OF SCANNED COPIES OF THIS PLAN SHEET.

NOTES:

1. EXACT LOCATION OF CONSTRUCTION AREA SIGNS WILL BE DETERMINED BY THE ENGINEER.
2. FEDERAL MANUAL ON UNIFORM TRAFFIC CONTROL DEVICES (MUTCD) SIGN CODES ARE SHOWN UNLESS DESIGNATED BY (CA), INDICATING CALIFORNIA MUTCD.
3. EXISTING UTILITIES ARE NOT SHOWN ON THESE PLAN SHEETS. THE CONTRACTOR SHALL VERIFY LOCATIONS OF EXISTING UTILITIES AND ADJUST THE FIELD LOCATION OF THE SIGN POSTS IN CONSULTATION WITH THE ENGINEER.

LEGEND:

XX = CONSTRUCTION AREA SIGN

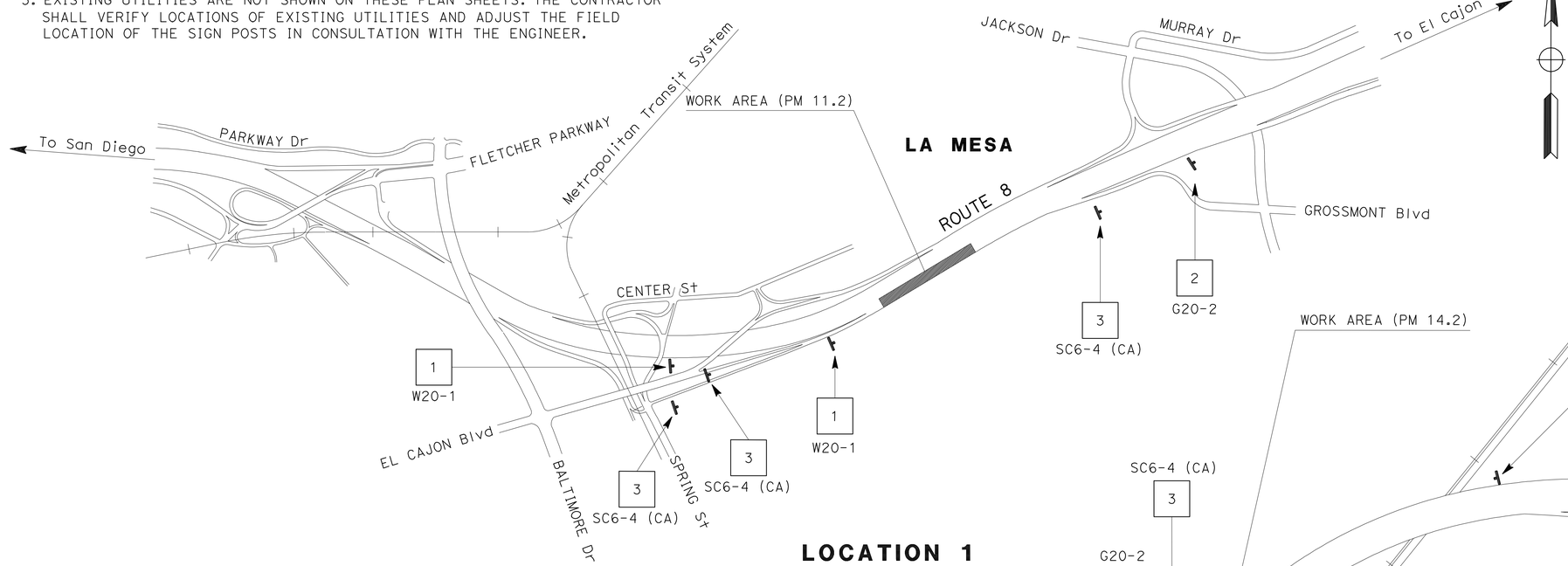

LOCATION 1
(PM 11.2)

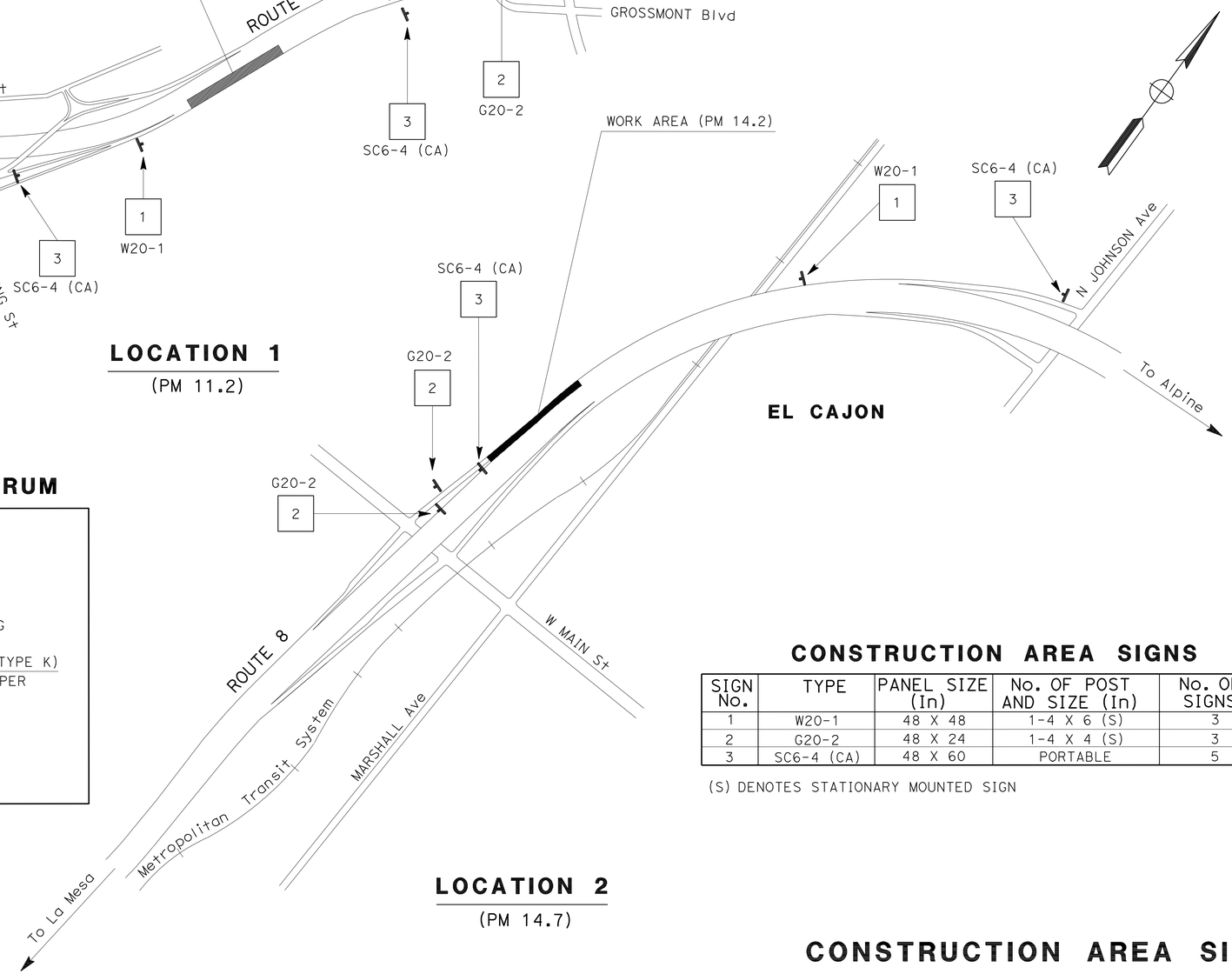

LOCATION 2
(PM 14.7)

TYPICAL PLACEMENT OF TRAFFIC PLASTIC DRUM

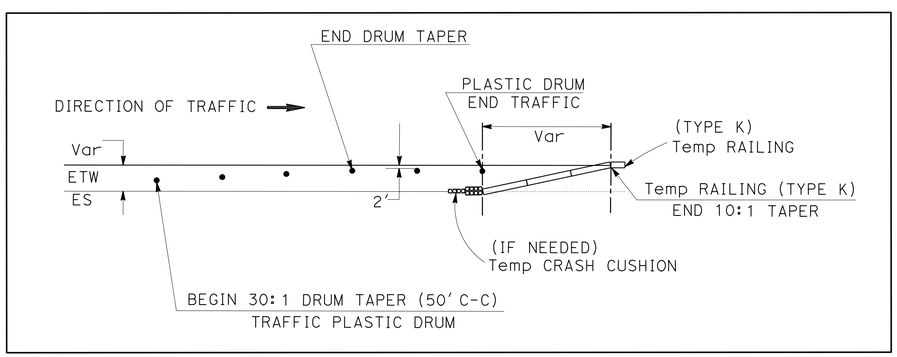

CONSTRUCTION AREA SIGNS

SIGN No.	TYPE	PANEL SIZE (In)	No. OF POST AND SIZE (In)	No. OF SIGNS
1	W20-1	48 X 48	1-4 X 6 (S)	3
2	G20-2	48 X 24	1-4 X 4 (S)	3
3	SC6-4 (CA)	48 X 60	PORTABLE	5

(S) DENOTES STATIONARY MOUNTED SIGN

APPROVED FOR CONSTRUCTION AREA SIGN WORK ONLY

NO SCALE

CONSTRUCTION AREA SIGNS

CS-1

REVISED BY | DATE REVISED
ROBERT EDEJER | SHAHIN ADIBI
CALCULATED-DESIGNED BY | CHECKED BY
FUNCTIONAL SUPERVISOR
CAMILLE ABOU FADEL

STATE OF CALIFORNIA - DEPARTMENT OF TRANSPORTATION
Caltrans
TRAFFIC DESIGN

LAST REVISION 01-30-12
DATE PLOTTED => 08-FEB-2012
TIME PLOTTED => 11:43

Dist	COUNTY	ROUTE	POST MILES TOTAL PROJECT	SHEET No.	TOTAL SHEETS
11	SD	8	11.2,14.7	12	21

RDGabriel 01-25-12
REGISTERED CIVIL ENGINEER DATE

02-06-12
PLANS APPROVAL DATE

REGISTERED PROFESSIONAL ENGINEER
RODOLFO D. GABRIEL
No. 67462
Exp. 06-30-13
CIVIL
STATE OF CALIFORNIA

THE STATE OF CALIFORNIA OR ITS OFFICERS OR AGENTS SHALL NOT BE RESPONSIBLE FOR THE ACCURACY OR COMPLETENESS OF SCANNED COPIES OF THIS PLAN SHEET.

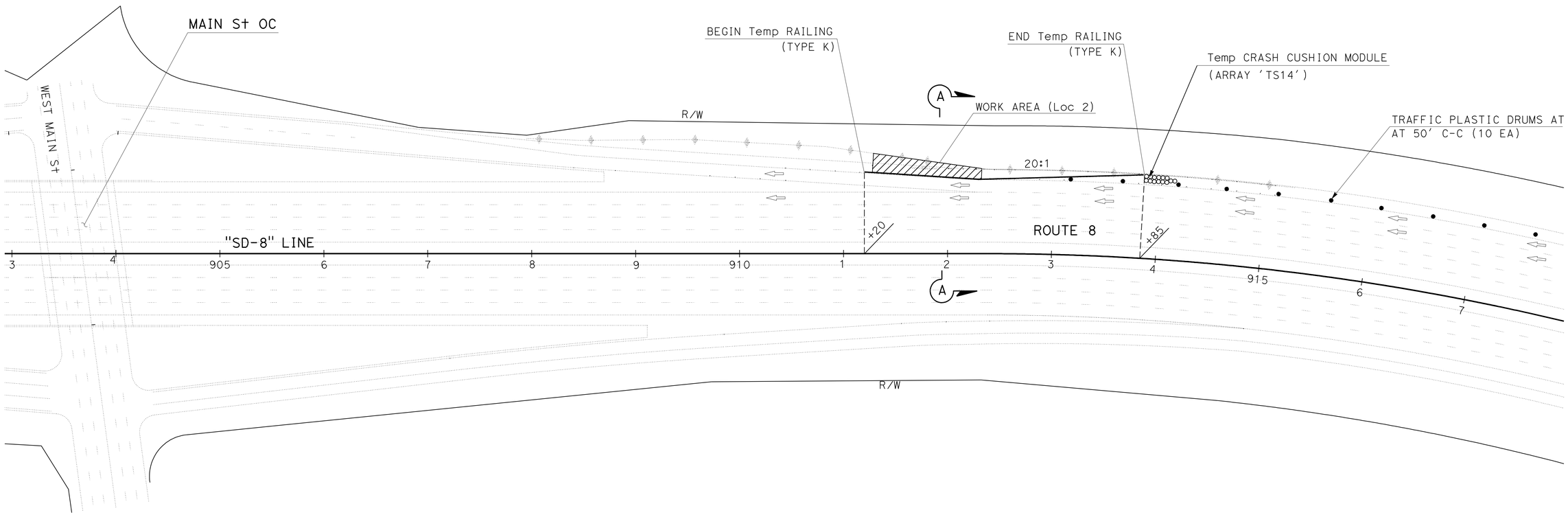

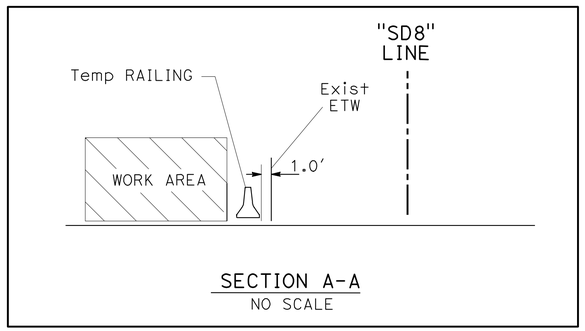

STAGE CONSTRUCTION PLAN

NO SCALE

SC-1

APPROVED FOR STAGE CONSTRUCTION WORK ONLY

STATE OF CALIFORNIA - DEPARTMENT OF TRANSPORTATION
Caltrans
DESIGN

FUNCTIONAL SUPERVISOR: KAZIM MAMDANI
CALCULATED-DESIGNED BY: RUDOLFO D. GABRIEL
CHECKED BY: GERRY CRUZ
REVISED BY
DATE REVISED

LAST REVISION 01-30-12
DATE PLOTTED => 08-FEB-2012
TIME PLOTTED => 11:43

Dist	COUNTY	ROUTE	POST MILES TOTAL PROJECT	SHEET No.	TOTAL SHEETS
11	SD	8	11.2/14.7	13	21

REGISTERED CIVIL ENGINEER DATE 01-25-12

02-06-12
PLANS APPROVAL DATE

REGISTERED PROFESSIONAL ENGINEER SHAHIN T. ADIBI No. 54839 Exp. 06-30-12 CIVIL STATE OF CALIFORNIA

THE STATE OF CALIFORNIA OR ITS OFFICERS OR AGENTS SHALL NOT BE RESPONSIBLE FOR THE ACCURACY OR COMPLETENESS OF SCANNED COPIES OF THIS PLAN SHEET.

NOTES:

1. ALL PAVEMENT DELINEATION SHALL BE REPLACED IN KIND UNLESS OTHERWISE INDICATED.
2. ALL PAINT TRAFFIC STRIPE SHALL BE REPLACED WITH THERMOPLASTIC UNLESS OTHERWISE INDICATED.

PAVEMENT DELINEATION QUANTITIES

ROUTE	FROM STATION	TO STATION	LINE	DETAIL	PAVEMENT MARKER SUMMARY			TRAFFIC STRIPE SUMMARY			REMARKS
					RETROREFLECTIVE (EA)			THERMOPLASTIC (LF)			
					TYPE C	TYPE G	TYPE H	4" SOLID	8" SOLID	8" BROKEN	
					YELLOW	CLEAR	YELLOW			(12-3)	
8	726+57	732+00	" SD-8 "	27B				543			LOCATION 1
	726+57	732+00	" SD-8 "	36A	32	8				543	LOCATION 1
	908+20	908+80	" SD-8 "	25A			4	60			LOCATION 2
	908+20	912+35	" SD-8 "	27B				415			LOCATION 2
	908+80	912+35	" SD-8 "	36		16			355		LOCATION 2
				SUBTOTAL	32	24	4	1,018	355	543	
				TOTAL		60		1,018	355	543	

THERMOPLASTIC PAVEMENT MARKING

ROUTE	LOCATION	DIRECTION	TYPE V ⇧ (SQFT)	SIGNAL (SQFT)	AHEAD (SQFT)	REMARKS
8	LOCATION 2	WB	33	32	31	
		SUBTOTAL	33	32	31	
		TOTAL	96			

REVISED BY | DATE REVISED

ROBERT EDEJER | SHAHIN T ADIBI

CALCULATED-DESIGNED BY | CHECKED BY

FUNCTIONAL SUPERVISOR: CAMILLE ABOUFADEL

STATE OF CALIFORNIA - DEPARTMENT OF TRANSPORTATION
Caltrans® TRAFFIC DESIGN

PAVEMENT DELINEATION QUANTITIES

PDQ-1

LAST REVISION 01-30-12 | DATE PLOTTED => 08-FEB-2012 TIME PLOTTED => 11:43

Dist	COUNTY	ROUTE	POST MILES TOTAL PROJECT	SHEET No.	TOTAL SHEETS
11	SD	8	11.2,14.7	14	21

RDGabriel 01-25-12
REGISTERED CIVIL ENGINEER DATE

02-06-12
PLANS APPROVAL DATE

REGISTERED PROFESSIONAL ENGINEER
RODOLFO D. GABRIEL
No. 67462
Exp. 06-30-13
CIVIL
STATE OF CALIFORNIA

THE STATE OF CALIFORNIA OR ITS OFFICERS OR AGENTS SHALL NOT BE RESPONSIBLE FOR THE ACCURACY OR COMPLETENESS OF SCANNED COPIES OF THIS PLAN SHEET.

ASPHALT CONCRETE DIKES

SHEET	ROUTE	LOCATION FROM Sta	LOCATION TO Sta	DIRECTION	REMOVE AC DIKE (LF)	PLACE HOT MIX ASPHALT DIKE (LF) TYPE A	TYPE C	TYPE D	TYPE F	MINOR HMA (TON)	PLACE HMA Misc AREA (SQYD)	Shldr PAD UNDER DIKE (TON) HOT MIX ASPHALT (TYPE A)
L-1	"SD-8"	726+66	732+61.44	EB	594.44	426.56	118.06		50.82	13.09		6
L-2	"SD-8"	908+80	912+35.24	WB	355.24			355.24		20.82		9
L-2	"SD-8"	911+40	912+35.24	WB						15	40	
				TOTALS	949.68	426.56	118.06	355.24	50.82	48.91	40	15*

*SEE ROADWAY QUANTITIES TABLE

ROADWAY QUANTITIES

SHEET	ROUTE	DIRECTION	BEGIN STATION	END STATION	AREA (N) (SQFT) SHOULDER	AREA (N) (SQFT) TRAVELED WAY	COLD PLANE AC PAVEMENT (SQYD) SHOULDER	COLD PLANE AC PAVEMENT (SQYD) TRAVELED WAY	HOT MIX ASPHALT (TYPE A) (TON) SHOULDER	HOT MIX ASPHALT (TYPE A) (TON) TRAVELED WAY	TACK COAT (TON)	ASPHALTIC EMULSION (FOG SEAL COAT) (TON)	ROADWAY EXCAVATION (CY)
L-1	"SD-8"	EB	726+66	732+00	5247	5117			78	116	0.1	0.1	110
L-2	"SD-8"	WB	908+80	912+35.24	3547	4205	395	474	53	78	0.1	0.1	
					SUBTOTALS		395	474	131	194	0.2	0.2	110
SHOULDER PAD UNDER DIKE									15				
					TOTALS		869		340		0.2	0.2	110

(N) NOT A SEPARATE PAY ITEM, FOR INFORMATION ONLY.

TEMPORARY WATER POLLUTION CONTROL

SHEET	ROUTE	STATION	TEMPORARY DRAINAGE INLET PROTECTION (TYPE 5) (EA)
WPC-1	"SD-8"		3
		TOTAL	3

STAGING PLAN

SHEET	ROUTE	TEMPORARY RAILING (TYPE K) (LF)	TRAFFIC PLASTIC DRUM (EA)	TEMPORARY CRASH CUSHION MODULE (EA)
SC-1	"SD-8"	280		
SC-1	"SD-8"		10	
SC-1	"SD-8"			14
TOTAL		280	10	14

SUMMARY OF QUANTITIES

Q-1

REVISED BY | DATE REVISED
RUDY GABRIEL | GERRY CRUZ
CALCULATED-DESIGNED BY | CHECKED BY
FUNCTIONAL SUPERVISOR: KAZIM MAMDANI
STATE OF CALIFORNIA - DEPARTMENT OF TRANSPORTATION
Caltrans® DESIGN

LAST REVISION 01-30-12 | DATE PLOTTED => 08-FEB-2012 | TIME PLOTTED => 11:43

DIST	COUNTY	ROUTE	POST MILES TOTAL PROJECT	SHEET NO.	TOTAL SHEETS
11	SD	8	11.2/14.7	15	21

Robert B Schott
LICENSED LANDSCAPE ARCHITECT

April 3, 2009
PLANS APPROVAL DATE

LICENSED LANDSCAPE ARCHITECT
Robert B. Schott 3695
Signature
11-30-10
Renewal Date
2-25-09
Date
STATE OF CALIFORNIA

The State of California or its officers or agents shall not be responsible for the accuracy or completeness of electronic copies of this plan sheet.

To accompany plans dated 02-06-12

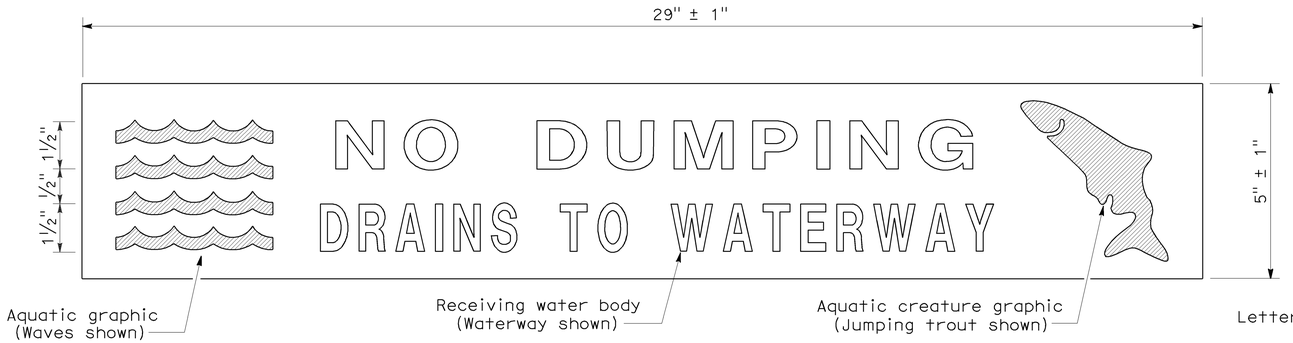

PLAN
DRAINAGE INLET MARKER
(PREFABRICATED THERMOPLASTIC)

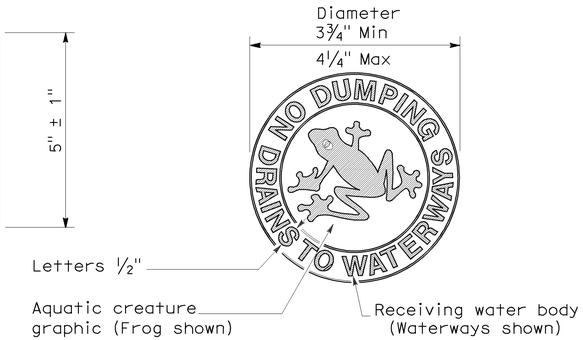

PLAN
DRAINAGE INLET MARKER
(MEDALLION)

PLAN
DRAINAGE INLET MARKER
(STAMPED CONCRETE IMPRINT)

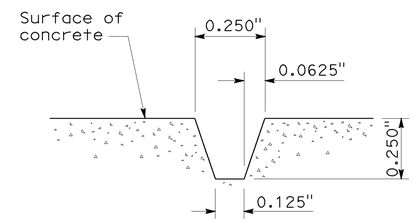

SECTION A-A
STAMPED CONCRETE
IMPRINT DETAIL

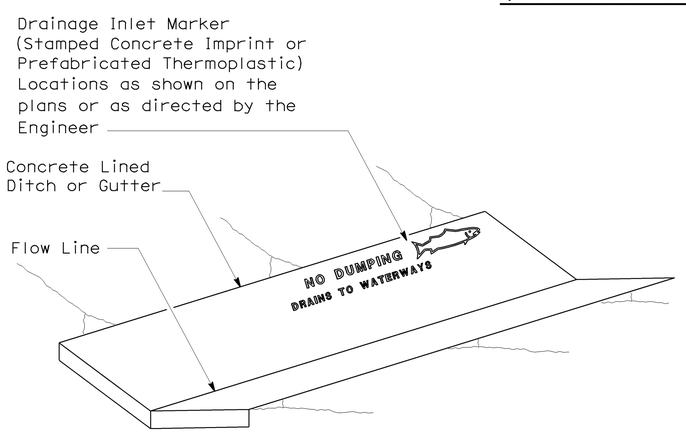

PERSPECTIVE
DRAINAGE INLET MARKER ON
CONCRETE LINED DITCH

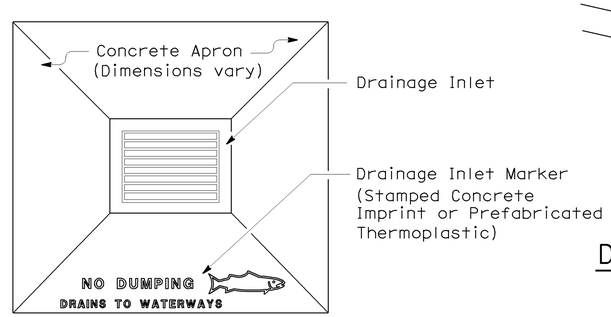

PLAN
DRAINAGE INLET MARKER ON
DRAINAGE INLET APRON

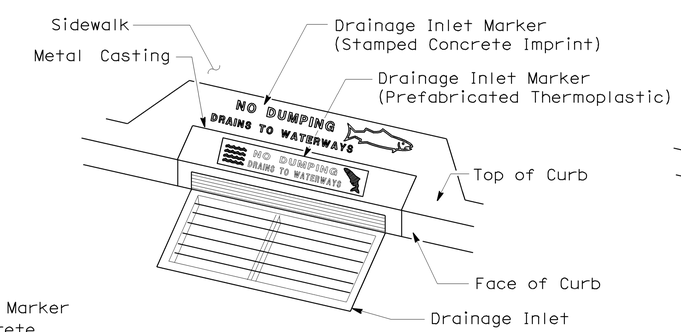

PERSPECTIVE
DRAINAGE INLET MARKER ON
DRAINAGE INLET

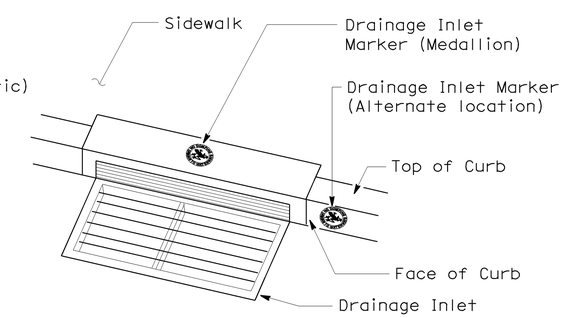

PERSPECTIVE
DRAINAGE INLET MARKER (MEDALLION)
ON DRAINAGE INLET

STATE OF CALIFORNIA
DEPARTMENT OF TRANSPORTATION

DRAINAGE INLET MARKERS

NO SCALE

NSP D71 DATED APRIL 3, 2009 SUPPLEMENTS
THE STANDARD PLANS BOOK DATED MAY 2006.

NEW STANDARD PLAN NSP D71

2006 NEW STANDARD PLAN NSP D71

7-24-08

Dist	COUNTY	ROUTE	POST MILES TOTAL PROJECT	SHEET No.	TOTAL SHEETS
11	SD	8	11.2/14.7	16	21

Randell D. Hiatt
REGISTERED CIVIL ENGINEER

May 20, 2011
PLANS APPROVAL DATE

REGISTERED PROFESSIONAL ENGINEER
Randell D. Hiatt
No. C50200
Exp. 6-30-11
CIVIL
STATE OF CALIFORNIA

The State of California or its officers or agents shall not be responsible for the accuracy or completeness of electronic copies of this plan sheet.

To accompany plans dated 02-06-12

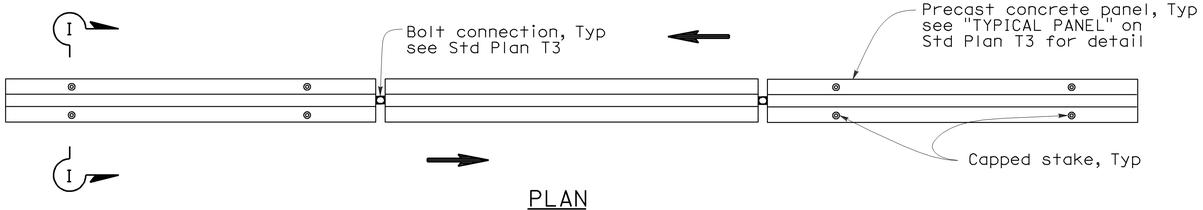

PLAN

RAILING STAKING CONFIGURATION FOR TWO-WAY TRAFFIC

See Note 1

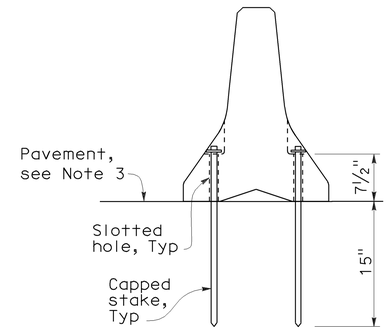

SECTION I-I

NOTES:

1. Where Type K Temporary Railing is placed as a temporary or long term barrier in two-way traffic on highways with less than 24" from the edge of traveled way, use four capped stakes per every other panel with end panels staked.
2. Where Type K Temporary Railing is placed 3" to 24" from the edge of an excavation on highways, use two capped stakes per panel along the traffic side.
3. Staked Type K Temporary Railing must be supported by at least 4" thick concrete, hot mix asphalt or existing asphalt concrete pavement.
4. The minimum yield strength for the washer must be 60,000 psi.
5. Direction of adjacent traffic indicated by ⟹.

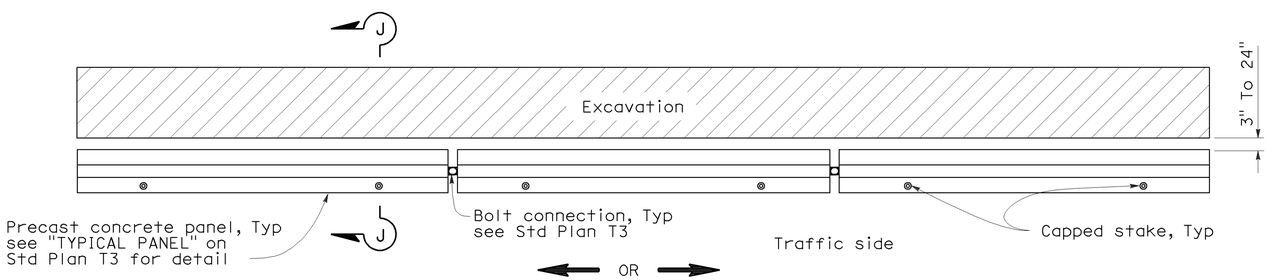

PLAN

RAILING STAKING CONFIGURATION ADJACENT TO AN EXCAVATION

See Note 2

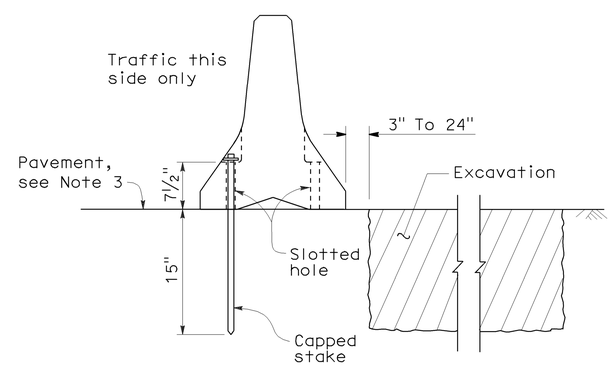

SECTION J-J

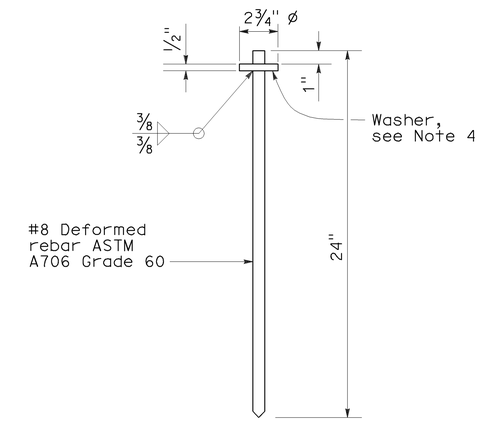

CAPPED STAKE DETAIL

STATE OF CALIFORNIA
DEPARTMENT OF TRANSPORTATION

TEMPORARY RAILING (TYPE K)

NO SCALE

NSP T3A DATED MAY 20, 2011 SUPPLEMENTS
THE STANDARD PLANS BOOK DATED MAY 2006.

NEW STANDARD PLAN NSP T3A

2006 NEW STANDARD PLAN NSP T3A

DIST	COUNTY	ROUTE	POST MILES TOTAL PROJECT	SHEET NO.	TOTAL SHEETS
11	SD	8	11.2/14.7	17	21

Robert B Schott
LICENSED LANDSCAPE ARCHITECT

August 15, 2008
PLANS APPROVAL DATE

LICENSED LANDSCAPE ARCHITECT
Robert B. Schott 3695
Robert B Schott
Signature
11-04-08
Renewal Date
08-11-08
Date
STATE OF CALIFORNIA

The State of California or its officers or agents shall not be responsible for the accuracy or completeness of electronic copies of this plan sheet.

To accompany plans dated 02-06-12

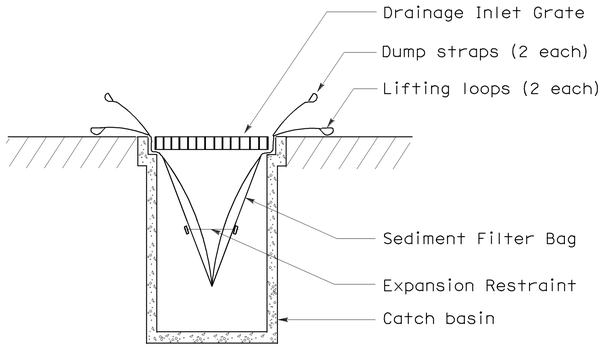

SECTION B-B

SEDIMENT FILTER BAG DETAIL

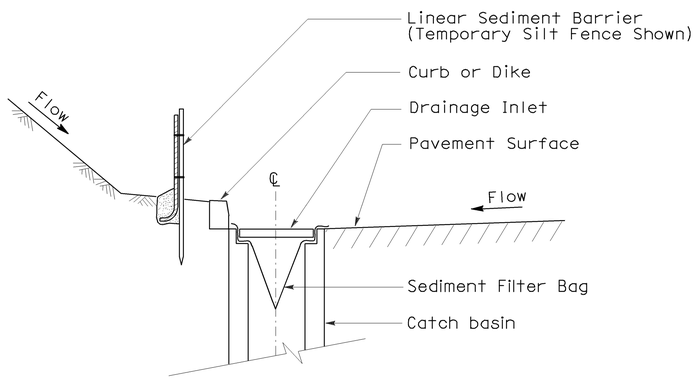

SECTION A-A

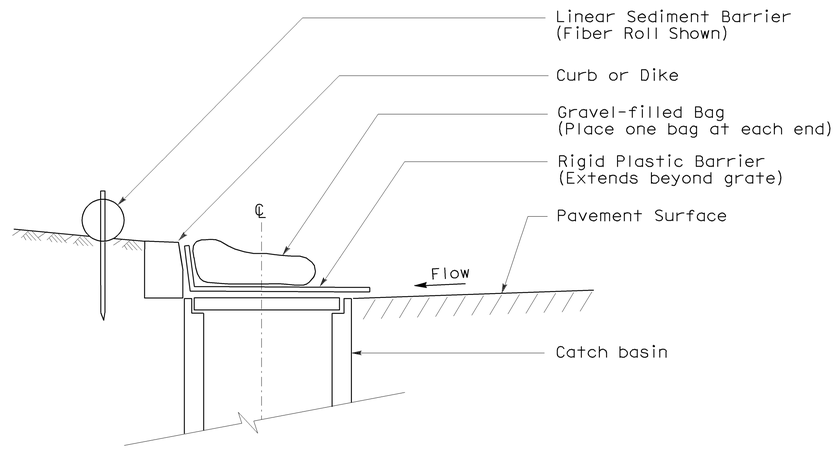

SECTION

TEMPORARY DRAINAGE INLET PROTECTION (TYPE 6A) (CATCH BASIN WITH GRATE)

NOTES:

1. See Standard Plan T51 for Temporary Silt Fence.
2. Dimensions may vary to fit field conditions.

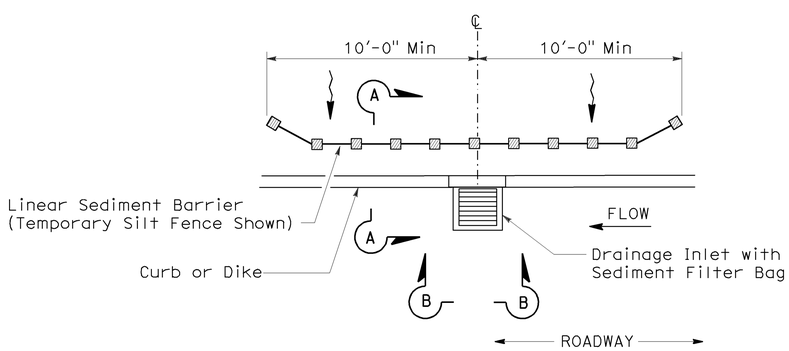

PLAN

TEMPORARY DRAINAGE INLET PROTECTION (TYPE 5) (SEDIMENT FILTER BAG)

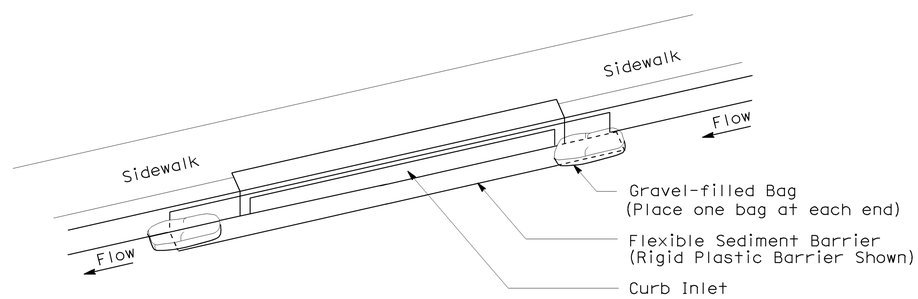

PERSPECTIVE

TEMPORARY DRAINAGE INLET PROTECTION (TYPE 6B) (CURB INLET WITHOUT GRATE)

STATE OF CALIFORNIA
DEPARTMENT OF TRANSPORTATION

TEMPORARY WATER POLLUTION CONTROL DETAILS (TEMPORARY DRAINAGE INLET PROTECTION)

NO SCALE

NSP T64 DATED AUGUST 15, 2008 SUPPLEMENTS
THE STANDARD PLANS BOOK DATED MAY 2006.

NEW STANDARD PLAN NSP T64

2006 NEW STANDARD PLAN NSP T64

7-11-08

DIST	COUNTY	ROUTE	POST MILES TOTAL PROJECT	SHEET NO.	TOTAL SHEETS
11	SD	8	11.2/14.7	18	21

REGISTERED CIVIL ENGINEER

June 6, 2008
PLANS APPROVAL DATE

REGISTERED PROFESSIONAL ENGINEER
Donald E. Howe
No. C46402
Exp. 3-31-09
CIVIL
STATE OF CALIFORNIA

The State of California or its officers or agents shall not be responsible for the accuracy or completeness of electronic copies of this plan sheet.

To accompany plans dated 02-06-12

2006 REVISED STANDARD PLAN RSP A24C

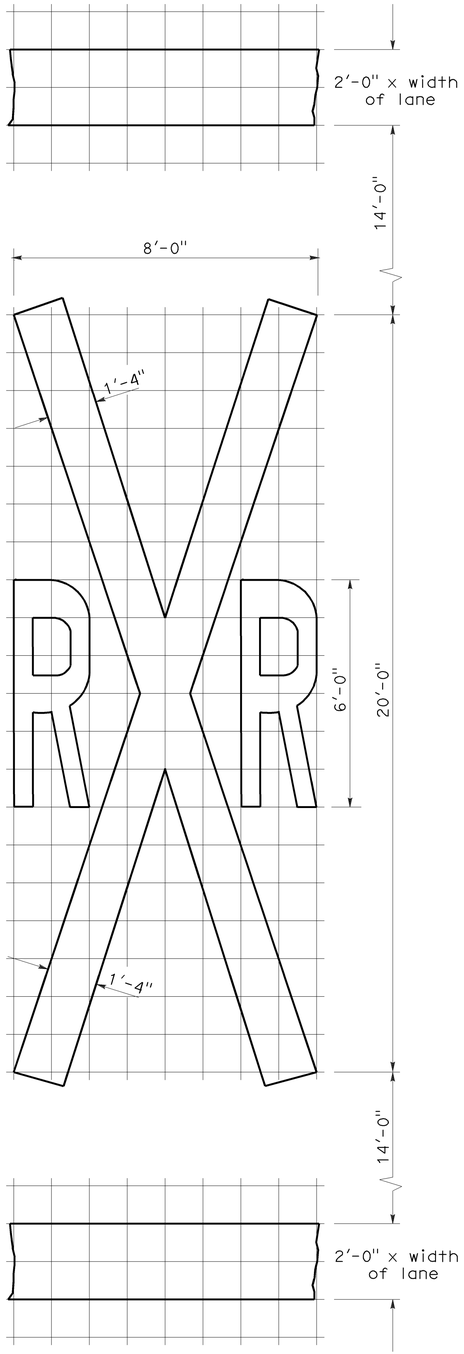

1'-0" GRID
A=70 sq ft ✳

RAILROAD CROSSING SYMBOL

✳70 sq ft DOES NOT INCLUDE THE 2'-0" x VARIABLE WIDTH TRANSVERSE LINES.

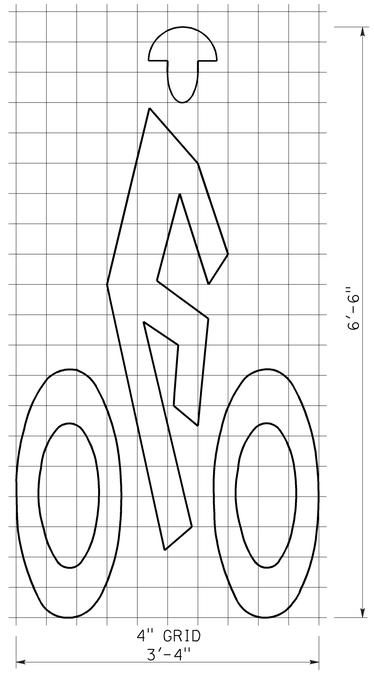

A=7 sq ft

BIKE LANE SYMBOL

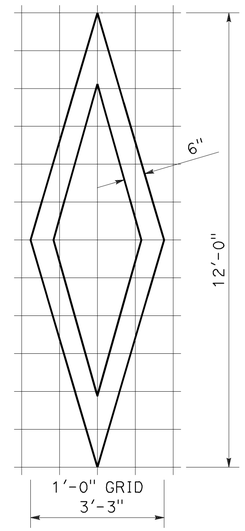

A=11 sq ft

DIAMOND SYMBOL

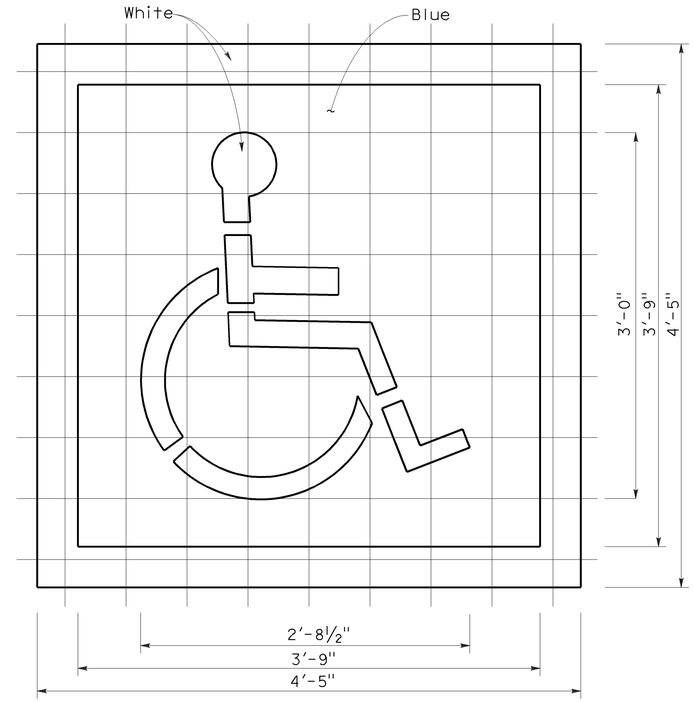

6" GRID
A (White) =9 sq ft
A (Blue) =14 sq ft

INTERNATIONAL SYMBOL OF ACCESSIBILITY MARKING

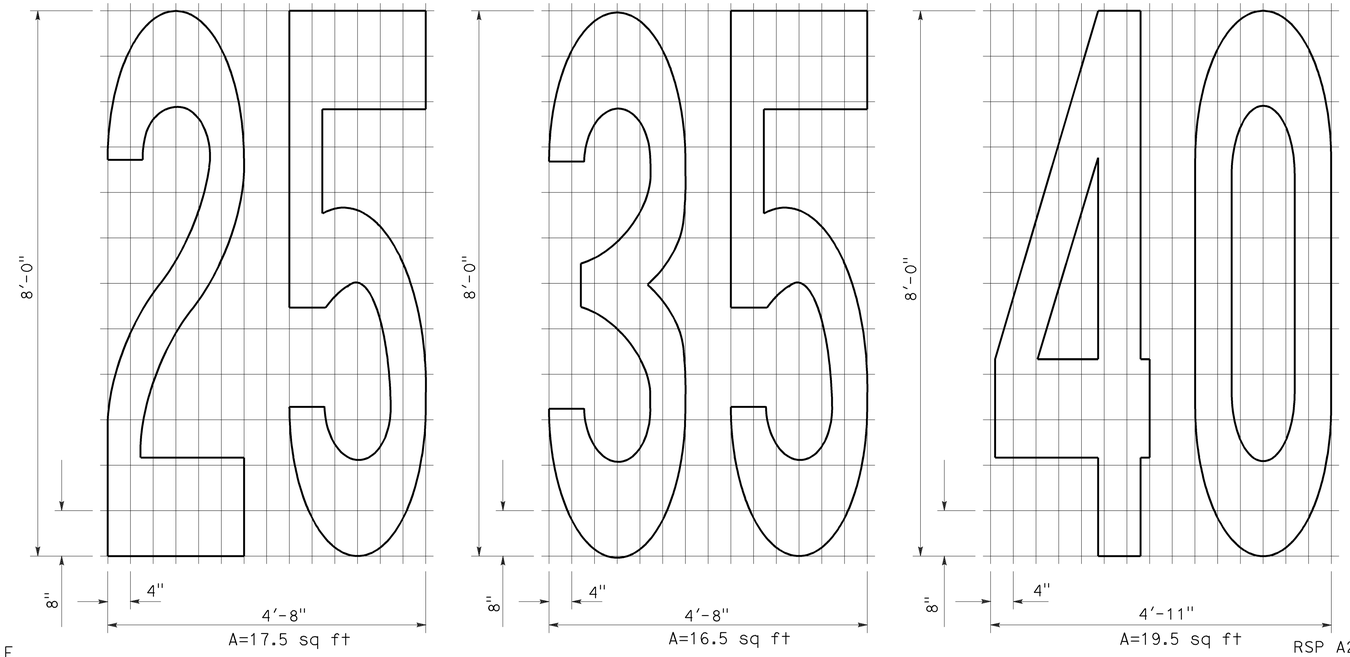

A=17.5 sq ft
A=16.5 sq ft
A=19.5 sq ft

NUMERALS

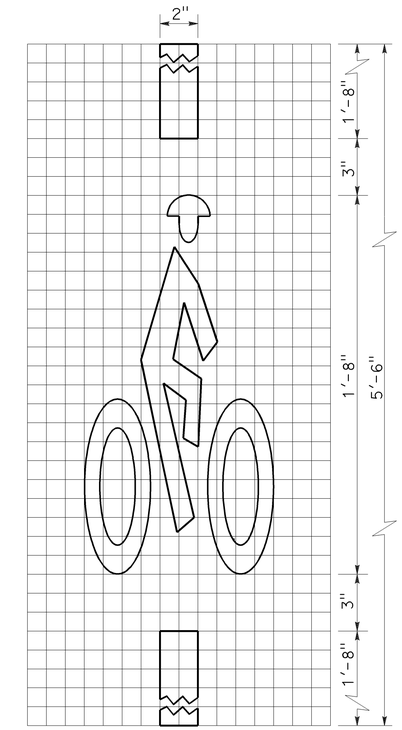

1" GRID
10"
A=2 sq ft

BICYCLE LOOP DETECTOR SYMBOL

NOTE:

1. Minor variations in dimensions may be accepted by the Engineer.

STATE OF CALIFORNIA
DEPARTMENT OF TRANSPORTATION

PAVEMENT MARKINGS SYMBOLS AND NUMERALS

NO SCALE

RSP A24C DATED JUNE 6, 2008 SUPERSEDES STANDARD PLAN A24C DATED MAY 1, 2006 - PAGE 11 OF THE STANDARD PLANS BOOK DATED MAY 2006.

REVISED STANDARD PLAN RSP A24C

5-27-08

DIST	COUNTY	ROUTE	POST MILES TOTAL PROJECT	SHEET NO.	TOTAL SHEETS
11	SD	8	11.2/14.7	19	21

Randell D. Hiatt
REGISTERED CIVIL ENGINEER

June 6, 2008
PLANS APPROVAL DATE

REGISTERED PROFESSIONAL ENGINEER
Randell D. Hiatt
No. C50200
Exp. 6-30-09
CIVIL
STATE OF CALIFORNIA

The State of California or its officers or agents shall not be responsible for the accuracy or completeness of electronic copies of this plan sheet.

To accompany plans dated 02-06-12

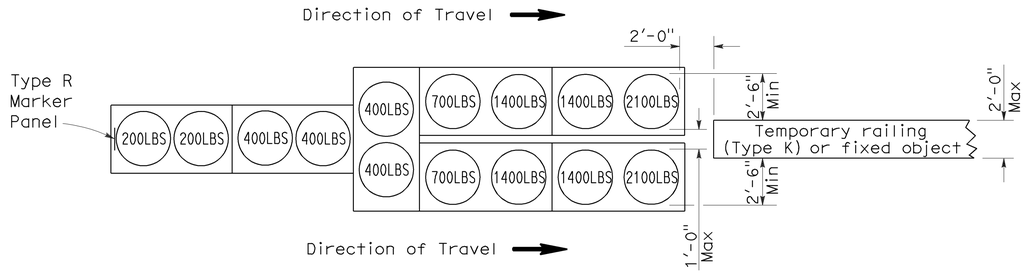

ARRAY 'TU14'

Approach speed 45 mph or more

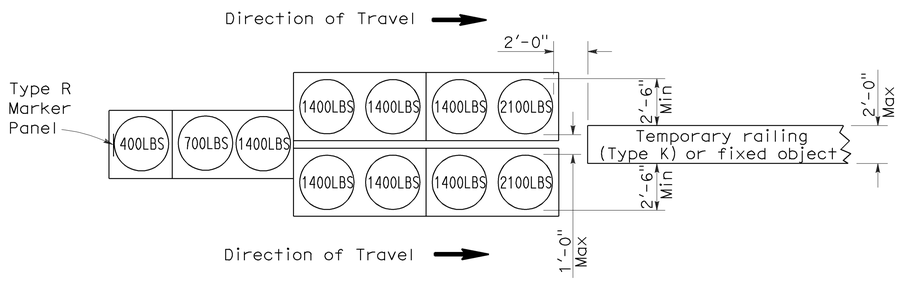

ARRAY 'TU11'

Approach speed less than 45 mph

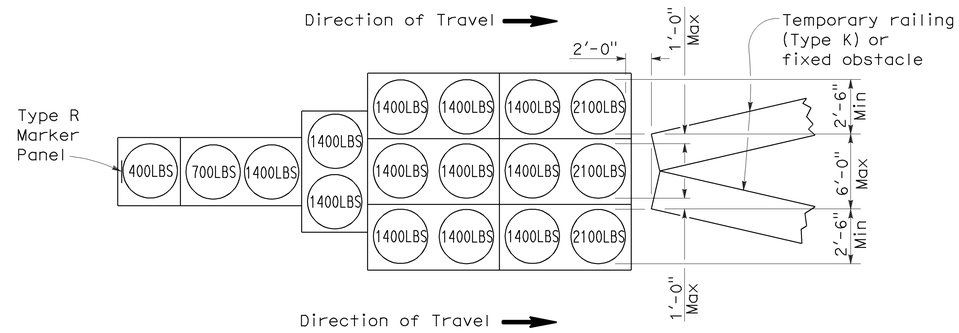

ARRAY 'TU17'

Approach speed less than 45 mph

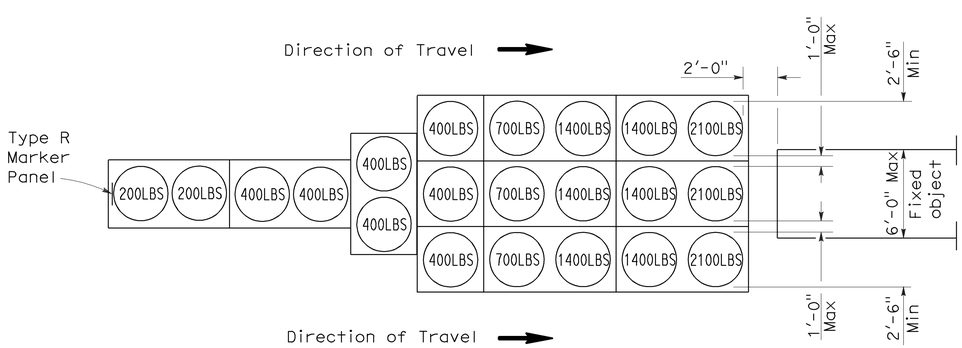

ARRAY 'TU21'

Approach speed 45 mph or more

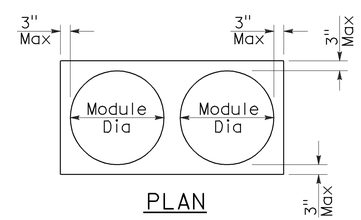

PLAN

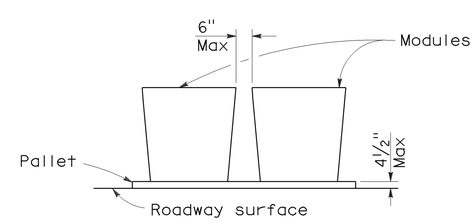

ELEVATION

CRASH CUSHION PALLET DETAIL

See Note 7

NOTES:

1. (XXX) Indicates sand filled module location and weight of sand in pounds for each module. Module spacing is based on the greater diameter of the module.
2. All sand weights are nominal.
3. Temporary crash cushion arrays shall not encroach on the traveled way.
4. Place the top of Type R marker panel 1" below the module lid.
5. Refer to Standard Plan A73B for marker details.
6. Approach speeds indicated conform to NCHRP 350 Report criteria.
7. Use of pallets is optional.

STATE OF CALIFORNIA
DEPARTMENT OF TRANSPORTATION

TEMPORARY CRASH CUSHION, SAND FILLED (UNIDIRECTIONAL)

NO SCALE

RSP T1A DATED JUNE 6, 2008 SUPERSEDES STANDARD PLAN T1A
DATED MAY 1, 2006 - PAGE 211 OF THE STANDARD PLANS BOOK DATED MAY 2006.

REVISED STANDARD PLAN RSP T1A

2006 REVISED STANDARD PLAN RSP T1A

DIST	COUNTY	ROUTE	POST MILES TOTAL PROJECT	SHEET NO.	TOTAL SHEETS
11	SD	8	11.2/14.7	20	21

Randell D. Hiatt
REGISTERED CIVIL ENGINEER

June 6, 2008
PLANS APPROVAL DATE

REGISTERED PROFESSIONAL ENGINEER
Randell D. Hiatt
No. C50200
Exp. 6-30-09
CIVIL
STATE OF CALIFORNIA

The State of California or its officers or agents shall not be responsible for the accuracy or completeness of electronic copies of this plan sheet.

To accompany plans dated 02-06-12

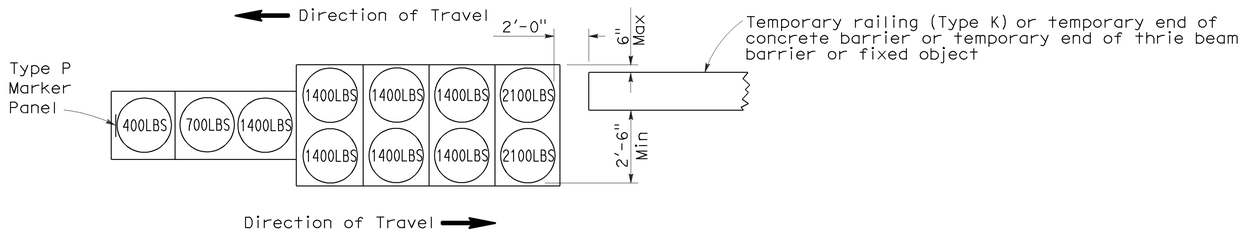

ARRAY 'TB11'

Approach speed less than 45 mph

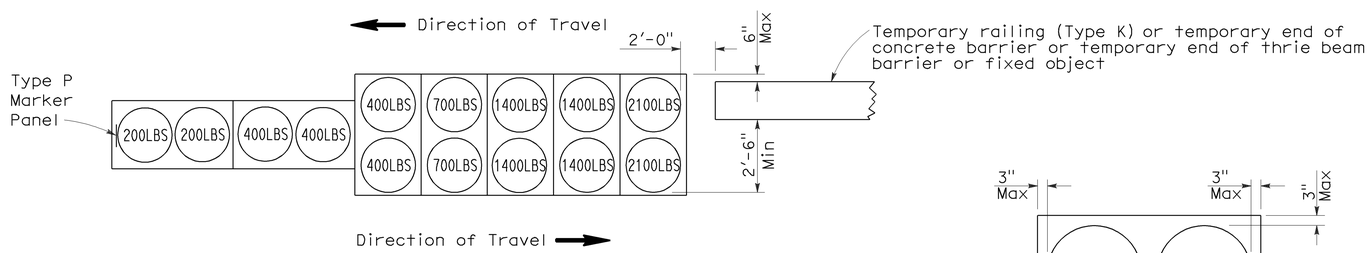

ARRAY 'TB14'

Approach speed 45 mph or more

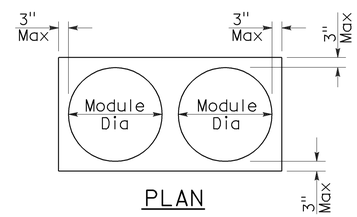

PLAN

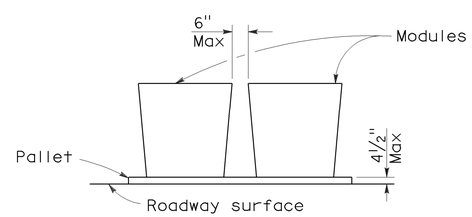

ELEVATION

CRASH CUSHION PALLET DETAIL

See Note 7

NOTES:

1. (XXX) Indicates sand filled module location and weight of sand in pounds for each module. Module spacing is based on the greater diameter of the module.
2. All sand weights are nominal.
3. Temporary crash cushion arrays shall not encroach on the traveled way.
4. Place the Type P marker panel so that the bottom of the panel rests upon the pallet.
5. Refer to Standard Plan A73B for marker details.
6. Approach speeds indicated conform to NCHRP 350 Report criteria.
7. Use of pallets is optional.

STATE OF CALIFORNIA
DEPARTMENT OF TRANSPORTATION

TEMPORARY CRASH CUSHION, SAND FILLED (BIDIRECTIONAL)

NO SCALE

RSP T1B DATED JUNE 6, 2008 SUPERSEDES STANDARD PLAN T1B
DATED MAY 1, 2006 - PAGE 212 OF THE STANDARD PLANS BOOK DATED MAY 2006.

REVISED STANDARD PLAN RSP T1B

2006 REVISED STANDARD PLAN RSP T1B

5-15-08

DIST	COUNTY	ROUTE	POST MILES TOTAL PROJECT	SHEET NO.	TOTAL SHEETS
11	SD	8	11.2/14.7	21	21

Randell D. Hiatt
REGISTERED CIVIL ENGINEER

June 6, 2008
PLANS APPROVAL DATE

REGISTERED PROFESSIONAL ENGINEER
Randell D. Hiatt
No. C50200
Exp. 6-30-09
CIVIL
STATE OF CALIFORNIA

The State of California or its officers or agents shall not be responsible for the accuracy or completeness of electronic copies of this plan sheet.

To accompany plans dated 02-06-12

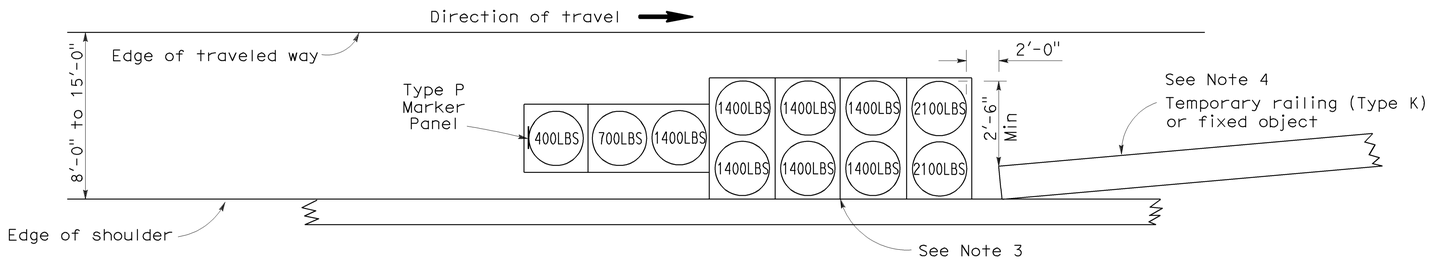

ARRAY 'TS11'

Approach speed less than 45 mph
See Note 9

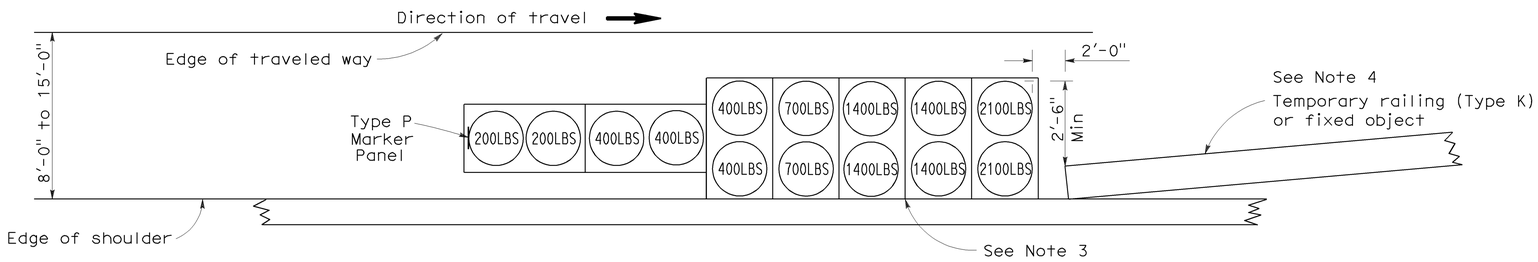

ARRAY 'TS14'

Approach speed 45 mph or more
See Note 9

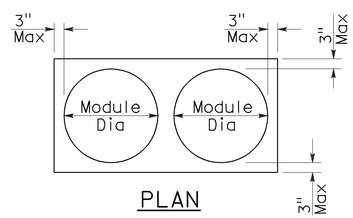

PLAN

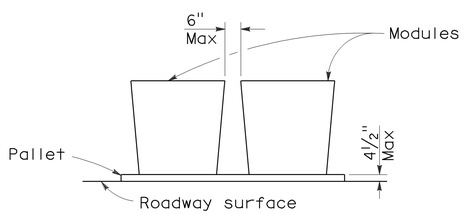

ELEVATION

CRASH CUSHION PALLET DETAIL

See Note 11

NOTES:

1. (XXX) Indicates sand filled module location and weight of sand in pounds for each module. Module spacing is based on the greater diameter of the module.
2. All sand weights are nominal.
3. The temporary crash cushion arrays shown on this plan shall be used only in locations where there will be traffic on one side of the temporary crash cushion array.
4. If the fixed object or approach end of the temporary railing is less than 15'-0" from the edge of traveled way, a temporary crash cushion is required in a construction or work zone.
5. Temporary crash cushion arrays shall not encroach on the traveled way.
6. Arrays for median shoulders shall conform to details shown on this plan for outside shoulders.
7. Place the Type P marker panel so that the bottom of the panel rests upon the pallet and faces traffic.
8. Refer to Standard Plan A73B for marker details.
9. For shoulder widths less than 8'-0", appropriate approved crash cushion protection, other than sand filled modules, shall be provided at fixed objects and at approach ends of temporary railing. The specific type of crash cushion shall be as shown on the project plans or as specified in the Special Provisions, or if not shown on the project plans or specified in the Special Provisions, shall be as approved by the Engineer.
10. Approach speeds indicated conform to NCHRP 350 Report criteria.
11. Use of pallets is optional.

STATE OF CALIFORNIA
DEPARTMENT OF TRANSPORTATION

TEMPORARY CRASH CUSHION, SAND FILLED (SHOULDER INSTALLATIONS)

NO SCALE

RSP T2 DATED JUNE 6, 2008 SUPERSEDES STANDARD PLAN T2
DATED MAY 1, 2006 - PAGE 213 OF THE STANDARD PLANS BOOK DATED MAY 2006.

REVISED STANDARD PLAN RSP T2

2006 REVISED STANDARD PLAN RSP T2

5-15-08