Dist	COUNTY	ROUTE	POST MILES TOTAL PROJECT	SHEET No.	TOTAL SHEETS
11	SD	5	R58.1/R72.4	201	259

07-12-13
REGISTERED CIVIL ENGINEER DATE

11-04-13
PLANS APPROVAL DATE

REGISTERED PROFESSIONAL ENGINEER ABDUL MALIKYAR No. C66169 Exp. 06-30-14 CIVIL STATE OF CALIFORNIA

THE STATE OF CALIFORNIA OR ITS OFFICERS OR AGENTS SHALL NOT BE RESPONSIBLE FOR THE ACCURACY OR COMPLETENESS OF SCANNED COPIES OF THIS PLAN SHEET.

ROADWAY QUANTITIES

SOUTHBOUND LINE	SHEET	STATION LIMITS FROM	STATION LIMITS TO	LENGTH	TRAVELED WAY WIDTH	Exist SHOULDER WIDTH INSIDE	Exist SHOULDER WIDTH OUTSIDE	ROADWAY EXCAVATION	IMPORTED BORROW	HOT MIX ASPHALT (TYPE A)	RUBBERIZED HOT MIX ASPHALT (GAP GRADED)	CLASS 2 AGGREGATE BASE	TACK COAT	ASPHALTIC EMULSION (FOG SEAL COAT)	COLD PLANE ASPHALT CONCRETE PAVEMENT	GRIND EXISTING CONCRETE PAVEMENT	RUMBLE STRIP	SHOULDER RUMBLE STRIP (AC, GROUND-IN INDENTATIONS)	SHOULDER RUMBLE STRIP (CONCRETE PAVEMENT, GROUND-IN INDENTATIONS)	REPAIR SPALLED JOINTS, POLYESTER GROUT
				LF	LF	LF	LF	CY	CY	TON	TON	CY	TON	TON	SQYD	SQYD	Sta	Sta	Sta	SQYD
"SD-5"	L-1	3099+00	3111+00	1,200	48	8	10	412.16	133.33	603.10		158.28	1.01	0.80	953.47		12.0	12.0		6.40
"SD-5"	L-2	3111+00	3124+50	1,350	48	8	10	250.00	150.00	650.00			1.01	0.90	1,500.00		13.5	13.5		7.20
"SD-5"	L-3	3124+50	3138+50	1,400	48	8	10	259.26	155.56	674.07			1.05	0.93	1,555.56		14.0	14.0		7.47
"SD-5"	L-4	3138+50	3151+50	1,300	48	8	10	240.74	144.44	625.93			0.98	0.87	1,444.44		13.0	13.0		6.93
"SD-5"	L-5	3151+50	3164+50	1,300	48	8	10	512.05	144.44	662.10		226.09	1.13	0.87	901.83		13.0	13.0		6.93
"SD-5"	L-6	3164+50	3177+50	1,300	48	8	10	243.23	144.44	626.26		2.07	0.98	0.87	479.82		13.0	13.0		6.93
"SD-5"	L-7	3177+50	3179+45.46	195.46	48	8	10	36.20	21.72	94.11			0.15	0.13	217.18		2.0	2.0		1.04
ALISO CREEK BRIDGE																				
"SD-5"	L-7	3180+34.54	3190+50	1,015.5	48	8	10	5.11	112.83	13.30			0.76	0.68	30.69		10.2	10.2		5.42
"SD-5"	L-8	3190+50	3204+00	1,350	48	8	10	250.00	150.00	650.00			1.01	0.90	1,500.00		13.5	13.5		7.20
"SD-5"	L-9	3204+00	3217+50	1,350	48	8	10	250.00	150.00	650.00			1.01	0.90	1,500.00		13.5	13.5		7.20
"SD-5"	L-10	3217+50	3231+50	1,400	48	8	10	373.16	155.56	689.26		94.92	1.12	0.93	1,327.76		14.0	14.0		7.47
"SD-5"	L-11	3231+50	3244+50	1,300	48	8	10	872.35	144.44	710.14		526.34	1.34	0.87	181.22		13.0	13.0		6.93
"SD-5"	L-12	3244+50	3258+50	1,400	48	8	10	984.35	155.56	770.75		604.24	1.47	0.93	105.38		14.0	14.0		7.47
"SD-5"	L-13	3258+50	3272+50	1,400	48	8	10	391.12	155.56	691.66		109.88	1.13	0.93	1,291.83		14.0	14.0		7.47
"SD-5"	L-14	3272+50	3274+70.36	220.36	48	8	10	95.72	24.48	113.42		45.76	0.20	0.15	135.01		2.2	2.2		1.18
LAS FLORES CREEK																				
"SD-5"	L-14	3277+22.6	3286+00	877.40	48	8	10	352.00	97.49	447.72		157.93	0.77	0.58	595.86		8.8	8.8		4.68
"SD-5"	L-15	3286+00	3299+50	1,350	48	8	10	451.54	150.00	703.95		167.95	1.33	0.90	1,918.63		13.5	13.5		7.20
"SD-5"	L-16	3299+50	3308+80.80	930.80	48	8	10	172.37	103.42	405.46			0.74	0.62	1,227.69		9.3	9.3		4.96
LAS PULGAS ROAD UNDERCROSSING																				
"SD-5"	L-16	3309+98.05	3313+00	301.95	48	8	10	55.92	33.55	145.38			0.23	0.20	335.50		3.0	3.0		1.61
"SD-5"	L-17	3313+00	3326+50	1,350	48	8	10	250.00	150.00	650.00			1.18	0.90	2,193.36		13.5	13.5		7.20
"SD-5"	L-18	3326+50	3340+50	1,400	48	8	10	727.58	155.56	736.52		390.26	1.32	0.93	618.92		14.0	14.0		7.47
"SD-5"	L-19	3340+50	3354+50	1,400	48	8	10	407.99	155.56	693.91		123.94	1.14	0.93	1,258.09		14.0	14.0		7.47
"SD-5"	L-20	3354+50	3368+50	1,400	48	8	10	259.26	155.56	674.07			1.05	0.93	1,555.56		14.0	14.0		7.47
"SD-5"	L-21	3368+50	3382+00	1,350	48	8	10	250.00	150.00	650.00			1.19	0.90	2,234.11		13.5	13.5		7.20
"SD-5"	L-22	3382+00	3395+50	1,350	48	8	10	250.00	150.00	799.76			1.31	0.90	2,744.28		13.5	13.5		7.20
"SD-5"	L-23	3395+50	3399+59.90	409.90	48	8	10	75.91	45.54	197.36			0.31	0.27	455.44		4.1	4.1		2.19
AGRA OVERHEAD																				
"SD-5"	L-23	3402+00	3408+50	650	48	8	10	220.87	72.22	210.77		131.16	0.40	0.20	278.68			6.5	5.9	1.57
"SD-5"	L-24	3408+50	3421+50	1,300	48	8	10	305.71	144.44	298.98		191.07	0.61	0.77	696.99			13.0	13.0	3.47
"SD-5"	L-25	3421+50	3435+00	1,350	48	8	10	611.07	150.00	486.64		381.92	0.96	0.80	283.40			13.5	13.5	3.60
"SD-5"	L-26	3435+00	3448+50	1,350	48	8	10		150.00	120.00			0.28	0.80	1,200.00			13.5	13.5	3.60
"SD-5"	L-27	3448+50	3462+00	1,350	48	8	10		150.00	120.00			0.28	0.80	1,200.00			13.5	13.5	3.60
"SD-5"	L-28	3462+00	3475+50	1,350	48	8	10		150.00	120.00			0.28	0.80	1,200.00			13.5	13.5	3.60
"SD-5"	L-29	3475+50	3488+50	1,300	48	8	10		144.44	115.56			0.27	0.77	1,155.56			13.0	13.0	3.47
"SD-5"	L-30	3488+50	3501+50	1,300	48	8	10	184.36	144.44	226.17		115.22	0.48	0.77	879.02			13.0	13.0	3.47
"SD-5"	L-31	3501+50	3514+00	1,250	48	8	10		138.89	111.11			0.26	0.74	1,111.11			12.5	12.5	3.33
"SD-5"	L-32	3514+00	3527+00	1,300	48	8	10		144.44	115.56			0.27	0.77	1,155.56			13.0	13.0	3.47
"SD-5"	L-33	3527+00	3540+50	1,350	48	8	10		150.00	120.00			0.28	0.80	1,200.00			13.5	13.5	3.60
"SD-5"	L-34	3540+50	3554+00	1,350	48	8	10	173.16	150.00	223.89		108.22	0.48	0.80	940.27			13.5	13.5	3.60
SHEET Q-3 SUBTOTAL								9,923.19	4,977.91	16,596.91		3,535.25	29.77	28.54	39,562.22		296.1	448.1	151.4	198.27

(N) NOT A SEPARATE PAY ITEM, FOR INFORMATION ONLY.

SUMMARY OF QUANTITIES
Q-3

STATE OF CALIFORNIA - DEPARTMENT OF TRANSPORTATION
Caltrans DESIGN
FUNCTIONAL SUPERVISOR: EDWARD HAJJ
CALCULATED-DESIGNED BY: ABDUL MALIKYAR
CHECKED BY: SEAN D. HOANG
REVISED BY
DATE REVISED

LAST REVISION 08-16-13
DATE PLOTTED => 31-OCT-2013
TIME PLOTTED => 15:25

Dist	COUNTY	ROUTE	POST MILES TOTAL PROJECT	SHEET No.	TOTAL SHEETS
11	SD	5	R58.1/R72.4	202	259

07-12-13
REGISTERED CIVIL ENGINEER DATE

11-04-13
PLANS APPROVAL DATE

REGISTERED PROFESSIONAL ENGINEER ABDUL MALIKYAR No. C66169 Exp. 06-30-14 CIVIL STATE OF CALIFORNIA

THE STATE OF CALIFORNIA OR ITS OFFICERS OR AGENTS SHALL NOT BE RESPONSIBLE FOR THE ACCURACY OR COMPLETENESS OF SCANNED COPIES OF THIS PLAN SHEET.

ROADWAY QUANTITIES

SOUTHBOUND LINE	SHEET	STATION LIMITS FROM	STATION LIMITS TO	LENGTH LF	TRAVELED WAY WIDTH LF	Exist SHOULDER WIDTH INSIDE LF	Exist SHOULDER WIDTH OUTSIDE LF	ROADWAY EXCAVATION CY	IMPORTED BORROW CY	HOT MIX ASPHALT (TYPE A) TON	RUBBERIZED HOT MIX ASPHALT (GAP GRADED) TON	CLASS 2 AGGREGATE BASE CY	TACK COAT TON	ASPHALTIC EMULSION (FOG SEAL COAT) TON	COLD PLANE ASPHALT CONCRETE PAVEMENT SQYD	GRIND EXISTING CONCRETE PAVEMENT SQYD	RUMBLE STRIP STA	SHOULDER RUMBLE STRIP (AC, GROUND-IN INDENTATIONS) STA	SHOULDER RUMBLE STRIP (CONCRETE PAVEMENT, GROUND-IN INDENTATIONS) STA	REPAIR SPALLED JOINTS, POLYESTER GROUT SQYD
"SD-5"	L-35	3554+00	3567+00	1,300	48	8	10		144.44	115.56			0.27	0.77	1,155.56	106.19		13.0	13.0	3.47
"SD-5"	L-36	3567+00	3580+50	1,350	48	8	10	178.10	150.00	497.58			0.80	0.73	1,413.72	198.61	9.6	13.5	3.9	6.16
"SD-5"	L-37	3580+50	3594+00	1,350	48	8	10	250.00	150.00	685.08			1.01	0.90	1,500.00	175.47	13.5	13.5		7.20
"SD-5"	L-38	3594+00	3607+50	1,350	48	8	10	250.00	150.00	650.00			1.01	0.90	1,500.00	281.30	13.5	13.5		7.20
"SD-5"	L-39	3607+50	3621+00	1,350	48	8	10	598.99	150.00	674.99		298.10	1.19	0.80	732.16		11.1	13.5	2.4	7.20
"SD-5"	L-40	3621+00	3635+50	1,450	48	8	10	527.88	161.11	445.62		329.93	0.89	0.86	497.07			14.5	14.5	7.73
"SD-5"	L-41	3635+50	3649+50	1,400	48	8	10	35.56	155.56	145.78		27.78	0.33	0.81	1,191.11			14.0	14.0	7.47
"SD-5"	L-42	3649+50	3663+00	1,350	48	8	10	89.47	150.00	309.67			0.55	0.84	1,307.36		4.8	13.5	8.7	7.20
"SD-5"	L-43	3663+00	3676+00	1,300	48	8	10	240.74	144.44	625.93			0.98	0.87	1,444.44		13.0	13.0		6.93
"SD-5"	L-44	3676+00	3689+00	1,300	48	8	10	240.74	144.44	625.93			0.98	0.87	1,444.44		13.0	13.0		6.93
"SD-5"	L-45	3689+00	3701+50	1,250	48	8	10	231.48	138.89	601.85			0.94	0.83	1,388.89		12.5	12.5		6.67
"SD-5"	L-46	3701+50	3714+50	1,300	48	8	10	240.74	144.44	625.93			0.98	0.87	1,444.44		13.0	13.0		6.93
"SD-5"	L-47	3714+50	3726+50	1,200	48	8	10	222.22	133.33	577.78			0.90	0.80	1,333.33		12.0	12.0		6.40
"SD-5"	L-48	3726+50	3739+50	1,300	48	8	10	240.74	144.44	625.93			0.98	0.87	1,444.44		13.0	13.0		6.93
"SD-5"	L-49	3739+50	3753+00	1,350	48	8	10	385.33	150.00	668.04		112.78	0.74	0.90	1,229.33		13.5	13.5		7.20
"SD-5"	L-50	3753+00	3766+00	1,300	48	8	10	368.99	144.44	643.03		106.87	0.71	0.87	1,187.96		13.0	13.0		6.93
"SD-5"	L-51	3766+00	3778+19.21	1,219.2	48	8	10	225.78	135.47	587.03			0.92	0.81	1,354.68		12.2	12.2		6.50
SAN ONOFRE BRIDGE																				
"SD-5"	L-52	3782+14.31	3792+50	1035.7	48	8	10	191.79	115.08	600.84			1.02	0.69	2,172.46		10.4	10.4		5.52
"SD-5"	L-53	3792+50	3806+00	1350	48	8	10	250.00	150.00	650.00			1.01	0.90	1,500.00		13.5	13.5		7.20
"SD-5"	L-54	3806+00	3819+50	1350	48	8	10	250.00	150.00	727.18			1.20	0.90	2,271.78		13.5	13.5		7.20
"SD-5"	L-55	3819+50	3829+00.70	950.70	48	8	10	325.04	105.63	477.61		124.15	0.58	0.63	758.37		9.5	9.5		5.07
SAN MATEO BRIDGE																				
"SD-5"	L-56	3834+04.62	3838+25.05	420.43	48	8	10	77.86		230.63			0.38	0.28	749.13		4.2	4.2		2.24
"SD-5L"	L-56	3838+25.04	3845+50	724.96	48	8	10	134.25	34.41	434.33			0.99	0.48	1,658.28		7.2	7.2		3.87
"SD-5L"	L-57	3845+50	3851+20.1	570.10	48	8	10	105.57	63.34	274.49			0.43	0.38	633.44		5.7	5.7		3.04
"OR-5"	L-57	32+02.83	32+80.83	78	48	8	10	14.44	8.67	37.56			0.06	0.05	86.67		0.8	0.8		0.42
(RAMPS)																				
"LPR-3"	L-16	3299+81.57	3309+36.33	954.76	12		8	255.16	106.08	510.31			0.52	0.28						
"LPR-4"	L-16	3309+43.87	3313+00	356.13	12		8		39.57		79.43		0.20	0.11	836.10					
"LPR-4"	L-17	3313+00	3319+50	650	12		8		72.22		139.97		0.35	0.19	1,473.36					
"TSS"	L-36	3570+92.62	3580+50	957.38			8		45.26		43.48		0.11	0.28	457.71	3,296.33				
"TSS"	L-37	3580+50	3594+00	1350												3,618.10				
"R3"	L-52	3791+44.69	3792+00	52.11	12		8		5.76		22.63		0.06	0.02	238.26					
"R3"	L-53	3792+00	3799+79.32	779.32	12		8		86.59		173.50		0.43	0.23	1,826.35					
"R4"	L-53	3799+41.41	3806+00	658.59	12		8		73.18		164.74		0.41	0.20	1,734.06					
"R4"	L-54	3806+00	3808+00	200	12		8		22.22		45.49		0.11	0.06	478.86					
"AR2"	L-56	384+250	3845+50	300	12-24	4	8				84.62		0.21	0.13	890.76					
"AR2"	L-57	3845+50	3847+54	204	24	4	8				67.05		0.17	0.09	705.75					
SHEET Q-4 SUBTOTAL								5,930.87	3,569.01	13,048.68	820.91	999.61	22.42	20.20	40,040.27	7,676.00	232.5	289.0	56.5	149.61

(N) NOT A SEPARATE PAY ITEM, FOR INFORMATION ONLY.

SUMMARY OF QUANTITIES
Q-4

REVISED BY | DATE REVISED

ABDUL MALIKYAR | SEAN D. HOANG

CALCULATED-DESIGNED BY | CHECKED BY

FUNCTIONAL SUPERVISOR: EDWARD HAJJ

STATE OF CALIFORNIA - DEPARTMENT OF TRANSPORTATION

Caltrans® DESIGN

LAST REVISION 08-16-13 | DATE PLOTTED => 31-OCT-2013 | TIME PLOTTED => 15:25

Dist	COUNTY	ROUTE	POST MILES TOTAL PROJECT	SHEET No.	TOTAL SHEETS
11	SD	5	R58.1/R72.4	203	259

07-12-13
REGISTERED CIVIL ENGINEER DATE

11-04-13
PLANS APPROVAL DATE

REGISTERED PROFESSIONAL ENGINEER
ABDUL MALIKYAR
No. C66169
Exp. 06-30-14
CIVIL
STATE OF CALIFORNIA

THE STATE OF CALIFORNIA OR ITS OFFICERS OR AGENTS SHALL NOT BE RESPONSIBLE FOR THE ACCURACY OR COMPLETENESS OF SCANNED COPIES OF THIS PLAN SHEET.

ROADWAY QUANTITIES

LINE	SHEET	STATION LIMITS FROM	STATION LIMITS TO	LENGTH	TRAVELED WAY WIDTH	Exist SHOULDER WIDTH INSIDE	Exist SHOULDER WIDTH OUTSIDE	ROADWAY EXCAVATION	IMPORTED BORROW	HOT MIX ASPHALT (TYPE A)	RUBBERIZED HOT MIX ASPHALT (GAP GRADED)	CLASS 2 AGGREGATE BASE	TACK COAT	ASPHALTIC EMULSION (FOG SEAL COAT)	COLD PLANE ASPHALT CONCRETE PAVEMENT	GRIND EXISTING CONCRETE PAVEMENT	RUMBLE STRIP	SHOULDER RUMBLE STRIP (AC, GROUND-IN INDENTATIONS)	SHOULDER RUMBLE STRIP (CONCRETE PAVEMENT, GROUND-IN INDENTATIONS)	REPAIR SPALLED JOINTS, POLYESTER GROUT
				LF	LF	LF	LF	CY	CY	TON	TON	CY	TON	TON	SQYD	SQYD	STA	STA	STA	SQYD
SHEET Q-1 SUBTOTAL								7,324.11	4,838.32	15,678.60		1,309.48	27.66	27.85	44,704.62	10,622.00	290.1	422.3	156.3	200.61
SHEET Q-2 SUBTOTAL								4,373.89	2,835.02	9,896.02	1,046.50	592.09	19.26	16.36	36,726.33	26,818.84	200.0	229.8	32.1	144.50
SHEET Q-3 SUBTOTAL								9,923.19	4,977.91	16,596.91		3,535.25	29.77	28.54	39,562.22		296.1	448.1	151.4	198.27
SHEET Q-4 SUBTOTAL								5,930.87	3,569.01	13,048.68	820.91	999.61	22.42	20.20	40,040.27	7,676.00	232.5	289.0	56.5	149.61
TOTAL								27,552.06***	16,220.26	55,220.21 *	1,867.41 *	6,436.43	99.11 *	92.95**	161,033.44	45,116.84****	1,018.7	1,389.2	396.3	692.99

(N) NOT A SEPARATE PAY ITEM, FOR INFORMATION ONLY.
* FOR ADDITIONAL QUANTITIES, SEE HOT MIX ASPHALT DIKE TABLE.
** FOR ADDITIONAL QUANTITIES, SEE HMA MISC AREA TABLE AND HOT MIX ASPHALT DIKE TABLE.
*** FOR ADDITIONAL QUANTITIES, SEE ROADWAY EXCAVATION TABLE.
**** FOR ADDITIONAL QUANTITIES, SEE REPLACE CONCRETE PAVEMENT TABLE.

SUMMARY OF QUANTITIES
Q-5

STATE OF CALIFORNIA - DEPARTMENT OF TRANSPORTATION
Caltrans
DESIGN

FUNCTIONAL SUPERVISOR: EDWARD HAJJ
CALCULATED-DESIGNED BY: ABDUL MALIKYAR
CHECKED BY: SEAN D. HOANG
REVISED BY
DATE REVISED

LAST REVISION 08-19-13
DATE PLOTTED => 31-OCT-2013
TIME PLOTTED => 15:25

Dist	COUNTY	ROUTE	POST MILES TOTAL PROJECT	SHEET No.	TOTAL SHEETS
11	SD	5	R58.1/R72.4	204	259

REGISTERED CIVIL ENGINEER 07-12-13 DATE

11-04-13
PLANS APPROVAL DATE

REGISTERED PROFESSIONAL ENGINEER ABDUL MALIKYAR No. C66169 Exp. 06-30-14 CIVIL STATE OF CALIFORNIA

THE STATE OF CALIFORNIA OR ITS OFFICERS OR AGENTS SHALL NOT BE RESPONSIBLE FOR THE ACCURACY OR COMPLETENESS OF SCANNED COPIES OF THIS PLAN SHEET.

MINOR CONCRETE (MINOR STRUCTURE)

ANCHOR BLOCK							
LINE	SHEET	DIRECTION	STATION	LENGTH	WIDTH	HEIGHT	CY
"SD-5"	L-7	NORTHBOUND	3178+74.11	3.5′	1′	4.67′	0.61
"SD-5"	L-7	NORTHBOUND	3178+95.25	3.5′	1′	4.67′	0.61
"SD-5"	L-7	SOUTHBOUND	3180+29.85	3.5′	1′	4.67′	0.61
"SD-5"	L-7	SOUTHBOUND	3180+48.21	3.5′	1′	4.67′	0.61
"SD-5"	L-14	NORTHBOUND	3274+38.89	3.5′	1′	4.67′	0.61
"SD-5"	L-14	NORTHBOUND	3274+54.62	3.5′	1′	4.67′	0.61
"SD-5"	L-14	SOUTHBOUND	3276+93.82	3.5′	1′	4.67′	0.61
"SD-5"	L-14	SOUTHBOUND	3277+09.36	3.5′	1′	4.67′	0.61
"SD-5"	L-16	NORTHBOUND	3308+62.50	3.5′	1′	4.67′	0.61
"SD-5"	L-16	NORTHBOUND	3308+62.62	3.5′	1′	4.67′	0.61
"SD-5"	L-16	SOUTHBOUND	3310+12.34	3.5′	1′	4.67′	0.61
"SD-5"	L-16	SOUTHBOUND	3310+12.15	3.5′	1′	4.67′	0.61
"SD-5"	L-23	SOUTHBOUND	3397+92.51	3.5′	1′	4.67′	0.61
TOTAL							7.93 *

* FOR ADDITIONAL QUANTITIES, SEE UNDERDRAIN TABLE AND DRAINAGE QUANTITIES

PAVEMENT JACKING

ROUTE	SHEET No.	LANE No.	LENGTH (N)	GROUT (JACKING)	DRILL HOLE (JACKING)
			LF	TON	EA
ROUTE 5 NB	L-2	4	204.5	14.8	56
ROUTE 5 NB	L-22	3	20.0	1.5	8
ROUTE 5 NB	L-51	4	346.1	25.1	96
ROUTE 5 NB	L-53	3	40.0	2.9	12
ROUTE 5 SB	L-9	3	87.8	6.4	24
ROUTE 5 SB	L-9	4	87.8	6.4	24
ROUTE 5 SB	L-14	4	99.4	7.2	28
ROUTE 5 SB	L-46	4	8.2	0.6	4
ROUTE 5 SB	L-47	4	181.1	13.1	52
ROUTE 5 SB	L-48	4	26.2	1.9	8
ROUTE 5 SB	L-51	4	62.9	4.6	20
ROUTE 5 SB	L-55	3	30.0	2.2	8
ROUTE 5 SB	L-57	4	58.7	4.3	16
		TOTAL	1,252.7	91.0	356

(N) - NOT A SEPARATE PAY ITEM, FOR INFORMATION ONLY

REMOVE CONCRETE

LINE	STATION		NORTHWEST CORNER	NORTHEAST CORNER	SOUTHWEST CORNER	SOUTHEAST CORNER	CURB, SIDEWALK, AND CURB RAMP
	FROM	TO					CY
"BR"	67+37.32	67+63.25			X		1.15
"CRI"	62+40.26	62+91.67			X		9.67
"CRI"	62+50.80	62+84.41	X				6.89
"CRI"	63+23.10	63+48.80		X			5.34
"CRI"	67+19.23	67+54.81	X				7.51
TOTAL							30.56

ROADWAY EXCAVATION

LINE	STATION		NORTHWEST CORNER	NORTHEAST CORNER	SOUTHWEST CORNER	SOUTHEAST CORNER	
	FROM	TO					CY
"BR"	63+31.83	63+85.54				X	7.04
"BR"	67+37.32	67+63.25			X		2.81
TOTAL							9.85 **

** FOR ADDITIONAL QUANTITIES, SEE ROADWAY QUANTITIES TABLE

MINOR CONCRETE (MISCELLANEOUS CONSTRUCTION)

LINE	STATION		NORTHWEST CORNER	NORTHEAST CORNER	SOUTHWEST CORNER	SOUTHEAST CORNER	CURB	SIDEWALK	CURB RAMP	DETECTABLE WARNING SURFACE
	FROM	TO					CY	CY	CY	SQFT
"BR"	63+31.83	63+85.54				X	2.30		1.23	15
"BR"	67+37.32	67+63.25			X		1.47		0.86	15
"CRI"	62+40.26	62+91.67			X		3.28	2.57	4.86	18
"CRI"	62+50.80	62+84.41	X				3.36	0.61	1.98	19
"CRI"	63+23.10	63+48.80		X			2.54	1.09	3.12	15
"CRI"	67+19.23	67+54.81	X				2.82	0.56	4.22	15
TOTAL							36.87			97

CONCRETE BARRIER

LINE	DIRECTION	STATION LIMITS		REMOVE CRASH CUSHION (SAND FILLED)	ALTERNATIVE CRASH CUSHION SYSTEM	CONCRETE BARRIER (TYPE 60)	HOT MIX ASPHALT	
							PLACE (MISC AREA)	MINOR
		FROM	TO	EA	EA	LF	SQYD	TON
"SD-5"	SOUTHBOUND	3591+39.79	3592+33.51	11	1	188.2		
		3591+72.67	3592+68.19				55.8	9.3
			TOTAL	11	1	188.2	55.8*	9.3**

(N) NOT A SEPARATE PAY ITEM, FOR INFORMATION ONLY.
* FOR ADDITIONAL QUANTITIES, SEE (HMA) Misc AREA TABLE.
** FOR ADDITIONAL QUANTITIES, SEE HOT MIX ASPHALT TABLE AND (HMA) Misc AREA TABLE.

SUMMARY OF QUANTITIES
Q-6

REVISED BY | DATE REVISED
ABDUL MALIKYAR | SEAN D. HOANG
CALCULATED-DESIGNED BY | CHECKED BY
FUNCTIONAL SUPERVISOR: EDWARD HAJJ
STATE OF CALIFORNIA - DEPARTMENT OF TRANSPORTATION
DESIGN
Caltrans

LAST REVISION 10-22-13 | DATE PLOTTED => 04-NOV-2013 | TIME PLOTTED => 10:01

Dist	COUNTY	ROUTE	POST MILES TOTAL PROJECT	SHEET No.	TOTAL SHEETS
11	SD	5	R58.1/R72.4	205	259

07-12-13
REGISTERED CIVIL ENGINEER DATE

11-04-13
PLANS APPROVAL DATE

REGISTERED PROFESSIONAL ENGINEER
ABDUL MALIKYAR
No. C66169
Exp. 06-30-14
CIVIL
STATE OF CALIFORNIA

THE STATE OF CALIFORNIA OR ITS OFFICERS OR AGENTS SHALL NOT BE RESPONSIBLE FOR THE ACCURACY OR COMPLETENESS OF SCANNED COPIES OF THIS PLAN SHEET.

REPLACE CONCRETE PAVEMENT

ROUTE	SHEET No.	LANE No.	RAPID STRENGTH CONCRETE (N)	JOINTED PLAIN CONCRETE PAVEMENT (RSC) (N)	PRECAST PRESTRESSED CONCRETE (N)	WIDTH (N)	INDIVIDUAL SLAB REPLACEMENT (RSC)	LEAN CONCRETE BASE RAPID SETTING	JOINTED PLAIN CONCRETE PAVEMENT (RSC)	GRIND EXISTING CONCRETE PAVEMENT	PRECAST PRESTRESSED CONCRETE PAVEMENT	RAPID STRENGTH CONCRETE BASE	REMOVE CONCRETE PAVEMENT AND BASE	DOWEL BAR (DRILL AND BOND)	REMARKS
			LENGTH												
			LF	LF	LF	LF	CY	CY	CY	SQYD	CY	CY	CY	EA	
ROUTE 5 NORTHBOUND	L-1	1				12									
		2	40.0			12	13.3	8.9						32	
		3				12									
		4	184.3			12	61.4	41.0						16	
	L-3	1				12									
		2				12									
		3				12									
		4	79.6			12	26.5	17.7						16	
	L-4	1				12									
		2				12									
		3				12									
		4	23.1			12	7.7	5.1						16	
	L-6	1	19.0			12	6.3	4.2						16	
		2	19.0			12	6.3	4.2						16	
		3				12									
		4	19.0			12	6.3	4.2						16	
	L-7	1				12									
		2				12									
		3	62.5			12	20.8	13.9						16	
		4	62.3			12	20.8	13.8						16	
	L-9	1				12									
		2				12									
		3				12									
		4	30.2			12	10.1	6.7						16	
	L-10	1				12									
		2				12									
		3	60.0			12	20.0	13.3						16	
		4	197.5			12	65.8	43.9						16	
	L-11	1				12									
		2				12									
		3				12									
		4	92.3			12	30.8	20.5						16	
	L-14	1				12									
		2				12				59.5					
		3		133.9		26			122.5			45.1	167.7		
		4													
SUB TOTAL			-	-	-	-	296.1	197.4	122.5	59.5	-	45.1	167.7	224	

(N) - NOT A SEPARATE PAY ITEM, FOR INFORMATION ONLY
(RSC) - RAPID SET CONCRETE

SUMMARY OF QUANTITIES
Q-7

STATE OF CALIFORNIA - DEPARTMENT OF TRANSPORTATION
Caltrans
DESIGN
FUNCTIONAL SUPERVISOR: EDWARD HAJJ
CALCULATED-DESIGNED BY: ABDUL MALIKYAR
CHECKED BY: RYAN MUNZ
REVISED BY
DATE REVISED

LAST REVISION 08-19-13
DATE PLOTTED => 31-OCT-2013
TIME PLOTTED => 15:25

Dist	COUNTY	ROUTE	POST MILES TOTAL PROJECT	SHEET No.	TOTAL SHEETS
11	SD	5	R58.1/R72.4	206	259

REGISTERED CIVIL ENGINEER 07-12-13 DATE

11-04-13
PLANS APPROVAL DATE

REGISTERED PROFESSIONAL ENGINEER ABDUL MALIKYAR No. C66169 Exp. 06-30-14 CIVIL STATE OF CALIFORNIA

THE STATE OF CALIFORNIA OR ITS OFFICERS OR AGENTS SHALL NOT BE RESPONSIBLE FOR THE ACCURACY OR COMPLETENESS OF SCANNED COPIES OF THIS PLAN SHEET.

REPLACE CONCRETE PAVEMENT

ROUTE	SHEET No.	LANE No.	RAPID STRENGTH CONCRETE (N)	JOINTED PLAIN CONCRETE PAVEMENT (RSC) (N)	PRECAST PRESTRESSED CONCRETE (N)	WIDTH (N)	INDIVIDUAL SLAB REPLACEMENT (RSC)	LEAN CONCRETE BASE RAPID SETTING	JOINTED PLAIN CONCRETE PAVEMENT (RSC)	GRIND EXISTING CONCRETE PAVEMENT	PRECAST PRESTRESSED CONCRETE PAVEMENT	RAPID STRENGTH CONCRETE BASE	REMOVE CONCRETE PAVEMENT AND BASE	DOWEL BAR (DRILL AND BOND)	REMARKS
			LENGTH												
			LF	LF	LF	LF	CY	CY	CY	SQYD	CY	CY	CY	EA	
ROUTE 5 NORTHBOUND	L-18	1				12									
		2				12									
		3	20.0			12	6.7	4.4						16	
		4	80.3			12	26.8	17.8						16	
	L-19	1				12									
		2				12									
		3				12									
		4	157.2			12	52.4	34.9						64	
	L-20	1				12									
		2				12									
		3				12									
		4	40.0			12	13.3	8.9						32	
	L-21	1				12									
		2				12									
		3				12									
		4	588.2			12	196.1	130.7						32	
	L-22	1				12									
		2				12									
		3				12									
		4	444.6			12	148.2	98.8						48	
	L-23	1				12									
		2				12				359.2					
		3		808.2		26			739.4			272.4	1,011.8		
		4													
	L-24	1				12									
		2				12				594.3					
		3		1,337.2		26			1,223.3			450.7	1,674.0		
		4													
	L-25	1				12									
		2				12				602.9					
		3		1,356.5		26			1,240.9			457.2	1,698.1		
		4													
	L-26	1				12									
		2				12				600.0					
		3		1,350.0		26			1,235.0			455.0	1,690.0		
		4													
	L-27	1				12									
		2	38.2			12	12.7	8.5		600.0				16	
		3		1,350.0		26			1,235.0			455.0	1,690.0		
		4													
	L-28	1				12									
		2				12				600.0					
		3		1,350.0		26			1,235.0			455.0	1,690.0		
		4													
	SUB TOTAL		-	-	-	-	456.2	304.0	6,908.6	3,356.4	-	2,545.3	9,453.9	224	

(N) - NOT A SEPARATE PAY ITEM, FOR INFORMATION ONLY

(RSC) - RAPID SET CONCRETE

SUMMARY OF QUANTITIES
Q-8

STATE OF CALIFORNIA - DEPARTMENT OF TRANSPORTATION
Caltrans
DESIGN

FUNCTIONAL SUPERVISOR: EDWARD HAJJ
CALCULATED-DESIGNED BY: ABDUL MALIKYAR
CHECKED BY: RYAN MUNZ
REVISED BY
DATE REVISED

LAST REVISION 08-19-13
DATE PLOTTED => 31-OCT-2013
TIME PLOTTED => 15:25

Dist	COUNTY	ROUTE	POST MILES TOTAL PROJECT	SHEET No.	TOTAL SHEETS
11	SD	5	R58.1/R72.4	207	259

REGISTERED CIVIL ENGINEER 07-12-13 DATE

11-04-13
PLANS APPROVAL DATE

REGISTERED PROFESSIONAL ENGINEER ABDUL MALIKYAR No. C66169 Exp. 06-30-14 CIVIL STATE OF CALIFORNIA

THE STATE OF CALIFORNIA OR ITS OFFICERS OR AGENTS SHALL NOT BE RESPONSIBLE FOR THE ACCURACY OR COMPLETENESS OF SCANNED COPIES OF THIS PLAN SHEET.

REPLACE CONCRETE PAVEMENT

ROUTE	SHEET No.	LANE No.	RAPID STRENGTH CONCRETE (N) LENGTH LF	JOINTED PLAIN CONCRETE PAVEMENT (RSC) (N) LENGTH LF	PRECAST PRESTRESSED CONCRETE (N) LENGTH LF	WIDTH (N) LF	INDIVIDUAL SLAB REPLACEMENT (RSC) CY	LEAN CONCRETE BASE RAPID SETTING CY	JOINTED PLAIN CONCRETE PAVEMENT (RSC) CY	GRIND EXISTING CONCRETE PAVEMENT SQYD	PRECAST PRESTRESSED CONCRETE PAVEMENT CY	RAPID STRENGTH CONCRETE BASE CY	REMOVE CONCRETE PAVEMENT AND BASE CY	DOWEL BAR (DRILL AND BOND) EA	REMARKS
ROUTE 5 NORTHBOUND	L-29	1				12									
		2				12				577.8					
		3		1,300.0		26			1,189.3			438.1	1,627.4		
		4													
	L-30	1				12									
		2				12				577.8					
		3		1,300.0		26			1,189.3			438.1	1,627.4		
		4													
	L-31	1				12									
		2				12				555.6					
		3		1,250.0		26			1,143.5			421.3	1,564.8		
		4													
	L-32	1				12									
		2				12				577.8					
		3		1,300.0		26			1,189.3			438.1	1,627.4		
		4													
	L-33	1				12									
		2				12				197.8					
		3		1,350.0		26			1,235.0			455.0	1,690.0		
		4													
	L-34	1				12									
		2				12									
		3		1,350.4		26			1,235.4			455.1	1,690.5		
		4													
	L-35	1				12									
		2	24.3			12	8.1	5.4						16	
		3		1,301.9		24.21			1,108.9			408.6	1,517.5		
		4													
	L-36	1				12									
		2	42.2			12	14.1	9.4						16	
		3		487.1		24			411.4			151.6	562.9		
		4													
		TSN	42.3			13.22	15.5	10.4						32	
	L-38	2				12									
		3				12									
		4	18.0			12	6.0	4.0						16	
		5	99.8			12	33.3	22.2						24	
	L-39	2				12									
		3	30.8			12	10.3	6.8		72.2				32	
		4	149.8	162.4		12	49.9	33.3	148.6			54.7	148.6	80	
		5	299.2			9.56	79.5	53.0						136	
	L-40	1				12									
		2				12				644.4					
		3		1,450.0		26			1,326.5			488.7	1,326.5		
		4													
	L-41	1				12									
		2				12				437.4					
		3		984.1		12			900.3			331.7	900.3		
		4	21.0			12	7.0	4.7						16	
	L-42	1				12									
		2				12									
		3				12									
		4	32.0			12	10.7	7.1						32	
	SUB TOTAL		-	-	-	-	234.4	156.3	11,077.5	3,640.8	-	4,081.0	14,283.3	400	

(N) - NOT A SEPARATE PAY ITEM, FOR INFORMATION ONLY

(RSC) - RAPID SET CONCRETE

SUMMARY OF QUANTITIES

Q-9

STATE OF CALIFORNIA - DEPARTMENT OF TRANSPORTATION

Caltrans® DESIGN

FUNCTIONAL SUPERVISOR: EDWARD HAJJ

CALCULATED-DESIGNED BY: ABDUL MALIKYAR

CHECKED BY: RYAN MUNZ

REVISED BY

DATE REVISED

LAST REVISION 08-19-13

DATE PLOTTED => 31-OCT-2013

TIME PLOTTED => 15:25

Dist	COUNTY	ROUTE	POST MILES TOTAL PROJECT	SHEET No.	TOTAL SHEETS
11	SD	5	R58.1/R72.4	208	259

07-12-13
REGISTERED CIVIL ENGINEER DATE

11-04-13
PLANS APPROVAL DATE

REGISTERED PROFESSIONAL ENGINEER ABDUL MALIKYAR No. C66169 Exp. 06-30-14 CIVIL STATE OF CALIFORNIA

THE STATE OF CALIFORNIA OR ITS OFFICERS OR AGENTS SHALL NOT BE RESPONSIBLE FOR THE ACCURACY OR COMPLETENESS OF SCANNED COPIES OF THIS PLAN SHEET.

REPLACE CONCRETE PAVEMENT

ROUTE	SHEET No.	LANE No.	RAPID STRENGTH CONCRETE (N)	JOINTED PLAIN CONCRETE PAVEMENT (RSC) (N)	PRECAST PRESTRESSED CONCRETE (N)	WIDTH (N)	INDIVIDUAL SLAB REPLACEMENT (RSC)	LEAN CONCRETE BASE RAPID SETTING	JOINTED PLAIN CONCRETE PAVEMENT (RSC)	GRIND EXISTING CONCRETE PAVEMENT	PRECAST PRESTRESSED CONCRETE PAVEMENT	RAPID STRENGTH CONCRETE BASE	REMOVE CONCRETE PAVEMENT AND BASE	DOWEL BAR (DRILL AND BOND)	REMARKS
			LENGTH												
			LF	LF	LF	LF	CY	CY	CY	SQYD	CY	CY	CY	EA	
ROUTE 5 NORTHBOUND	L-44	1				12									
		2				12									
		3				12									
		4	129.5			12	43.2	28.8						96	
	L-45	1				12									
		2				12									
		3				12									
		4	73.0			12	24.3	16.2						48	
	L-47	1				12									
		2				12									
		3	20.0			12	6.7	4.4						16	
		4	401.8			12	133.9	89.3						56	
	L-48	1				12									
		2				12									
		3				12									
		4	237.7			12	79.2	52.8						72	
	L-49	1				12									
		2				12									
		3				12									
		4	243.1			12	81.0	54.0						80	
	L-50	1				12									
		2				12									
		3				12									
		4	451.5			12	150.5	100.3						48	
	L-51	1				12									
		2				12									
		3				12									
		4	134.5			12	44.8	29.9						48	
	L-52	1				12									
		2				12									
		3				12									
		4	374.4			12	124.8	83.2						80	
	L-53	1	106.2			12	35.4	23.6						80	
		2	185.5			12	61.8	41.2						64	
		3	252.0			12	84.0	56.0						96	
		4	734.5			12	244.8	163.2						80	
	L-54	1				12									
		2	109.5			12	36.5	24.3						80	
		3				12									
		4	453.1			12	151.0	100.7						120	
	L-55	1	25.0			12	8.3	5.6						16	
		2	39.0			12	13.0	8.7						32	
		3	34.0			12	11.3	7.6						32	
		4	266.0			12	88.7	59.1						152	
	L-56	1	69.8			12	23.3	15.5						24	
		2	99.0			12	33.0	22.0		451.6				40	
		3		1,016.2		26			929.6			342.5	1,272.1		
		4													
SUB TOTAL			-	-	-	-	1,479.5	986.4	929.6	451.6	-	342.5	1,272.1	1,360	

(N) - NOT A SEPARATE PAY ITEM, FOR INFORMATION ONLY
(RSC) - RAPID SET CONCRETE

SUMMARY OF QUANTITIES
Q-10

STATE OF CALIFORNIA - DEPARTMENT OF TRANSPORTATION
Caltrans® DESIGN

FUNCTIONAL SUPERVISOR: EDWARD HAJJ
CALCULATED-DESIGNED BY: ABDUL MALIKYAR
CHECKED BY: RYAN MUNZ
REVISED BY
DATE REVISED

LAST REVISION 08-19-13
DATE PLOTTED => 31-OCT-2013
TIME PLOTTED => 15:25

REPLACE CONCRETE PAVEMENT

ROUTE	SHEET No.	LANE No.	RAPID STRENGTH CONCRETE (N)	JOINTED PLAIN CONCRETE PAVEMENT (RSC) (N)	PRECAST PRESTRESSED CONCRETE (N)	WIDTH (N)	INDIVIDUAL SLAB REPLACEMENT (RSC)	LEAN CONCRETE BASE RAPID SETTING	JOINTED PLAIN CONCRETE PAVEMENT (RSC)	GRIND EXISTING CONCRETE PAVEMENT	PRECAST PRESTRESSED CONCRETE PAVEMENT	RAPID STRENGTH CONCRETE BASE	REMOVE CONCRETE PAVEMENT AND BASE	DOWEL BAR (DRILL AND BOND)	REMARKS
			LENGTH												
			LF	LF	LF	LF	CY	CY	CY	SQYD	CY	CY	CY	EA	
ROUTE 5 NB	L-57	1	144.5			12	48.2	32.1						104	
		2	164.7			12	54.9	36.6		257.6				104	
		3		579.6		26			530.2			195.3	725.5		
		4													
ROUTE 5 SOUTHBOUND	L-1	1				12									
		2				12									
		3	33.0			12	11.0	7.3						32	
		4	518.4			12	172.8	115.2						88	
	L-2	1				12									
		2				12									
		3	160.0			12	53.3	35.6						80	
		4	367.2			12	122.4	81.6						120	
	L-3	1				12									
		2				12									
		3	92.3			12	30.8	20.5						48	
		4	296.9			12	99.0	66.0						128	
	L-4	1				12									
		2	61.6			12	20.5	13.7						16	
		3	294.3			12	98.1	65.4						72	
		4	451.5			12	150.5	100.3						152	
	L-5	1	24.0			12	8.0	5.3						16	
		2	24.0			12	8.0	5.3						16	
		3	597.5			12	199.2	132.8						152	
		4	999.0			12	333.0	222.0						120	
	L-6	1				12									
		2				12									
		3	222.7			12	74.2	49.5						32	
		4	601.4			12	200.5	133.6						176	
	L-7	1				12									
		2				12									
		3	221.7			12	73.9	49.3						24	
		4	83.0			12	27.7	18.4						48	
	L-8	1				12									
		2				12									
		3	528.3			12	176.1	117.4						264	
		4	232.1			12	77.4	51.6						112	
	L-9	1				12									
		2				12									
		3	227.9			12	76.0	50.7						160	
		4	449.9			12	150.0	100.0						128	
	L-10	1				12									
		2				12									
		3				12									
		4	671.0			12	223.7	149.1						144	
	L-11	1				12									
		2				12									
		3	17.0			12	5.7	3.8						16	
		4	1,150.9			12	383.6	255.8						24	
	L-12	1				12									
		2				12									
		3				12									
		4	1,176.9			12	392.3	261.5						72	
	L-13	1				12									
		2				12									
		3	76.2			12	25.4	16.9						32	
		4	947.5			12	315.8	210.6						176	
	SUB TOTAL		-	-	-	-	3,612	2,407.9	530.2	257.6	-	195.3	725.5	2,656	

Dist	COUNTY	ROUTE	POST MILES TOTAL PROJECT	SHEET No.	TOTAL SHEETS
11	SD	5	R58.1/R72.4	209	259

07-12-13
REGISTERED CIVIL ENGINEER DATE

11-04-13
PLANS APPROVAL DATE

REGISTERED PROFESSIONAL ENGINEER
ABDUL MALIKYAR
No. C66169
Exp. 06-30-14
CIVIL
STATE OF CALIFORNIA

THE STATE OF CALIFORNIA OR ITS OFFICERS OR AGENTS SHALL NOT BE RESPONSIBLE FOR THE ACCURACY OR COMPLETENESS OF SCANNED COPIES OF THIS PLAN SHEET.

(N) - NOT A SEPARATE PAY ITEM, FOR INFORMATION ONLY

(RSC) - RAPID SET CONCRETE

SUMMARY OF QUANTITIES

Q-11

REVISED BY | DATE REVISED

ABDUL MALIKYAR | RYAN MUNZ

CALCULATED-DESIGNED BY | CHECKED BY

FUNCTIONAL SUPERVISOR: EDWARD HAJJ

STATE OF CALIFORNIA - DEPARTMENT OF TRANSPORTATION

Caltrans® DESIGN

LAST REVISION 08-19-13 | DATE PLOTTED => 31-OCT-2013 | TIME PLOTTED => 15:25

Dist	COUNTY	ROUTE	POST MILES TOTAL PROJECT	SHEET No.	TOTAL SHEETS
11	SD	5	R58.1/R72.4	210	259

07-12-13
REGISTERED CIVIL ENGINEER DATE

11-04-13
PLANS APPROVAL DATE

REGISTERED PROFESSIONAL ENGINEER ABDUL MALIKYAR No. C66169 Exp. 06-30-14 CIVIL STATE OF CALIFORNIA

THE STATE OF CALIFORNIA OR ITS OFFICERS OR AGENTS SHALL NOT BE RESPONSIBLE FOR THE ACCURACY OR COMPLETENESS OF SCANNED COPIES OF THIS PLAN SHEET.

REPLACE CONCRETE PAVEMENT

ROUTE	SHEET No.	LANE No.	RAPID STRENGTH CONCRETE (N) LENGTH LF	JOINTED PLAIN CONCRETE PAVEMENT (RSC) (N) LENGTH LF	PRECAST PRESTRESSED CONCRETE (N) LENGTH LF	WIDTH (N) LF	INDIVIDUAL SLAB REPLACEMENT (RSC) CY	LEAN CONCRETE BASE RAPID SETTING CY	JOINTED PLAIN CONCRETE PAVEMENT (RSC) CY	GRIND EXISTING CONCRETE PAVEMENT SQYD	PRECAST PRESTRESSED CONCRETE PAVEMENT CY	RAPID STRENGTH CONCRETE BASE CY	REMOVE CONCRETE PAVEMENT AND BASE CY	DOWEL BAR (DRILL AND BOND) EA	REMARKS
ROUTE 5 SOUTHBOUND	L-14	1				12									
		2	23.0			12	7.7	5.1						16	
		3	11.3			12	3.8	2.5						16	
		4	443.1			12	147.7	98.5						40	
	L-15	1				12									
		2				12									
		3	31.0			12	10.3	6.9						16	
		4	309.6			12	103.2	68.8						56	
	L-16	1				12									
		2				12									
		3				12									
		4	97.0			12	32.3	21.6						80	
	L-17	1				12									
		2				12									
		3				12									
		4	157.3			12	52.4	35.0						136	
	L-18	1				12									
		2				12									
		3	60.8			12	20.3	13.5						16	
		4	1181.2			12	393.7	262.5						96	
	L-19	1				12									
		2				12									
		3				12									
		4	472.5			12	157.5	105.0						184	
	L-20	1				12									
		2				12									
		3	23.7			12	7.9	5.3						16	
		4	482.2			12	160.7	107.2						208	
	L-21	1				12									
		2				12									
		3				12									
		4	467.3			12	155.8	103.8						104	
	L-22	1				12									
		2				12									
		3	73.0			12	24.3	16.2						32	
		4	196.8			12	65.6	43.7						104	
	L-23	1	111.4			12	37.1	24.7						16	
		2	111.4			12	37.1	24.7		262.2				16	
		3		590.0		26			539.7			198.8	738.5		
		4													
	L-24	1				12									
		2				12				567.2					
		3		1,276.3		26			1,167.5			430.1	1,597.7		
		4													
	L-25	1				12									
		2				12				598.2					
		3		1,345.9		26			1,231.2			453.6	1,684.8		
		4													
	L-26	1				12									
		2				12				600.0					
		3		1,350.0		26			1,235.0			455.0	1,690.0		
		4													
	L-27	1				12									
		2				12				600.0					
		3		1,350.0		26			1,235.0			455.0	1,690.0		
		4													
SUB TOTAL			-	-	-	-	1,417.4	945.0	5,408.4	2,627.6	-	1,992.5	7,401.0	1,152	

(N) - NOT A SEPARATE PAY ITEM, FOR INFORMATION ONLY
(RSC) - RAPID SET CONCRETE

SUMMARY OF QUANTITIES

Q-12

STATE OF CALIFORNIA - DEPARTMENT OF TRANSPORTATION
Caltrans DESIGN

FUNCTIONAL SUPERVISOR: EDWARD HAJJ
CALCULATED-DESIGNED BY: ABDUL MALIKYAR
CHECKED BY: RYAN MUNZ
REVISED BY
DATE REVISED

LAST REVISION 08-19-13
DATE PLOTTED => 31-OCT-2013
TIME PLOTTED => 15:25

REPLACE CONCRETE PAVEMENT

ROUTE	SHEET No.	LANE No.	RAPID STRENGTH CONCRETE (N)	JOINTED PLAIN CONCRETE PAVEMENT (RSC) (N)	PRECAST PRESTRESSED CONCRETE (N)	WIDTH (N)	INDIVIDUAL SLAB REPLACEMENT (RSC)	LEAN CONCRETE BASE RAPID SETTING	JOINTED PLAIN CONCRETE PAVEMENT (RSC)	GRIND EXISTING CONCRETE PAVEMENT	PRECAST PRESTRESSED CONCRETE PAVEMENT	RAPID STRENGTH CONCRETE BASE	REMOVE CONCRETE PAVEMENT AND BASE	DOWEL BAR (DRILL AND BOND)	REMARKS
			LENGTH												
			LF	LF	LF	LF	CY	CY	CY	SQYD	CY	CY	CY	EA	
ROUTE 5 SOUTHBOUND	L-28	1				12									
		2				12				600.0					
		3		1,350.0		26			1,235.0			455.0	1,690.0		
		4													
	L-29	1				12									
		2				12				577.8					
		3		1,300.0		26			1,189.3			438.2	1,627.4		
		4													
	L-30	1				12									
		2				12				577.8					
		3		1,300.0		26			1,189.3			438.2	1,627.4		
		4													
	L-31	1				12									
		2				12				555.6					
		3		1,250.0		26			1,143.5			421.3	1,564.8		
		4													
	L-32	1				12									
		2				12				577.8					
		3		1,300.0		26			1,189.3			438.2	1,627.4		
		4													
	L-33	1				12									
		2				12				600.0					
		3		1,350.0		26			1,235.0			455.0	1,690.0		
		4													
	L-34	1				12									
		2				12				599.9					
		3													
		4		1,349.7		31.52			1,497.1			463.9	1,961.0		
		TSS													
	L-35	1				12									
		2				12				577.3					
		3													
		4		1,298.9		38.36			1,753.1			463.9	2,217.0		
		TSS													
	L-36	1				12									
		2	37.0			12	12.3	8.2		174.7				32	
		3		393.2		45.23			625.7			230.5	856.2		
		4													
		TSS	56.8			14	22.1	14.7						32	
	L-37	1				12									
		2				12									
		3				12									
		4	51.9			12	17.3	11.5						32	
		TSS	18.0			12	6.0	4.0						16	
	L-38	1				12									
		2				12									
		3				12									
		4	532.9			12	177.6	118.4						176	
	L-39	1				12									
		2				12									
		3	80.6		235.8	12	26.9	222.0			208.3		244.9	16	
		4	753.2			12	251.1							80	
	L-40	1				12									
		2	20.0			12	6.7	4.4		251.9				16	
		3		566.8	883.2	12		137.4	518.6		780.2	191.0	917.6		
		4				12									
SUB TOTAL			-	-	-	-	520.0	520.6	11,575.9	5,092.8	988.5	3,995.2	16,023.7	400	

Dist	COUNTY	ROUTE	POST MILES TOTAL PROJECT	SHEET No.	TOTAL SHEETS
11	SD	5	R58.1/R72.4	211	259

07-12-13
REGISTERED CIVIL ENGINEER DATE

11-04-13
PLANS APPROVAL DATE

REGISTERED PROFESSIONAL ENGINEER ABDUL MALIKYAR No. C66169 Exp. 06-30-14 CIVIL STATE OF CALIFORNIA

THE STATE OF CALIFORNIA OR ITS OFFICERS OR AGENTS SHALL NOT BE RESPONSIBLE FOR THE ACCURACY OR COMPLETENESS OF SCANNED COPIES OF THIS PLAN SHEET.

(N) - NOT A SEPARATE PAY ITEM, FOR INFORMATION ONLY
(RSC) - RAPID SET CONCRETE

SUMMARY OF QUANTITIES

Q-13

REVISED BY | DATE REVISED
ABDUL MALIKYAR | RYAN MUNZ
CALCULATED-DESIGNED BY | CHECKED BY
FUNCTIONAL SUPERVISOR: EDWARD HAJJ

STATE OF CALIFORNIA - DEPARTMENT OF TRANSPORTATION
Caltrans® DESIGN

LAST REVISION 08-19-13 | DATE PLOTTED => 31-OCT-2013 | TIME PLOTTED => 15:25

REPLACE CONCRETE PAVEMENT

ROUTE	SHEET No.	LANE No.	RAPID STRENGTH CONCRETE (N)	JOINTED PLAIN CONCRETE PAVEMENT (RSC) (N)	PRECAST PRESTRESSED CONCRETE (N)	WIDTH (N)	INDIVIDUAL SLAB REPLACEMENT (RSC)	LEAN CONCRETE BASE RAPID SETTING	JOINTED PLAIN CONCRETE PAVEMENT (RSC)	GRIND EXISTING CONCRETE PAVEMENT	PRECAST PRESTRESSED CONCRETE PAVEMENT	RAPID STRENGTH CONCRETE BASE	REMOVE CONCRETE PAVEMENT AND BASE	DOWEL BAR (DRILL AND BOND)	REMARKS
			LENGTH												
			LF	LF	LF	LF	CY	CY	CY	SQYD	CY	CY	CY	EA	
ROUTE 5 SOUTHBOUND	L-41	1				12									
		2				12				622.2					
		3		1,400.0		12			1,280.7			471.9	1,280.7		
		4				12									
	L-42	1				12									
		2				12				385.3					
		3		866.9		12			793.0			292.2	793.0		
		4	67.3			12	22.4	15.0						24	
	L-43	1				12									
		2				12									
		3	20.0			12	6.7	4.4						16	
		4	93.9			12	31.3	20.9						56	
	L-44	1				12									
		2				12									
		3				12									
		4	321.3			12	107.1	71.4						128	
	L-45	1				12									
		2				12									
		3				12									
		4	99.7			12	33.2	22.2						24	
	L-46	1				12									
		2				12									
		3	328.5			12	109.5	73.0						24	
		4	39.0			12	13.0	8.7						48	
	L-47	1				12									
		2				12									
		3	295.9			12	98.6	65.8						184	
		4	121.2			12	40.4	26.9						96	
	L-48	1				12									
		2				12									
		3	35.0			12	11.7	7.8						32	
		4				12									
	L-49	1				12									
		2	20.0			12	6.7	4.4						16	
		3	39.0			12	13.0	8.7						32	
		4	270.1			12	90.0	60.0						48	
	L-50	1				12									
		2				12									
		3				12									
		4	292.0			12	97.3	64.9						64	
	L-51	1				12									
		2				12									
		3				12									
		4	74.9			12	25.0	16.6						48	
	L-52	1				12									
		2				12									
		3				12									
		4	19.0			12	6.3	4.2						16	
	L-53	1				12									
		2				12									
		3	36.7			12	12.2	8.1						16	
		4	189.4			12	63.1	42.1						80	
	L-54	1				12									
		2				12									
		3	24.9			12	8.3	5.5						16	
		4	285.1			12	95.0	63.4						208	
SUB TOTAL			-	-	-	-	890.8	594.0	2,073.7	1,007.5	-	764.1	2,073.7	1,176	

(N) - NOT A SEPARATE PAY ITEM, FOR INFORMATION ONLY
(RSC) - RAPID SET CONCRETE

Dist	COUNTY	ROUTE	POST MILES TOTAL PROJECT	SHEET No.	TOTAL SHEETS
11	SD	5	R58.1/R72.4	212	259

07-12-13
REGISTERED CIVIL ENGINEER DATE

11-04-13
PLANS APPROVAL DATE

REGISTERED PROFESSIONAL ENGINEER
ABDUL MALIKYAR
No. C66169
Exp. 06-30-14
CIVIL
STATE OF CALIFORNIA

THE STATE OF CALIFORNIA OR ITS OFFICERS OR AGENTS SHALL NOT BE RESPONSIBLE FOR THE ACCURACY OR COMPLETENESS OF SCANNED COPIES OF THIS PLAN SHEET.

REVISED BY | DATE REVISED
ABDUL MALIKYAR | RYAN MUNZ
CALCULATED-DESIGNED BY | CHECKED BY
FUNCTIONAL SUPERVISOR
EDWARD HAJJ

STATE OF CALIFORNIA - DEPARTMENT OF TRANSPORTATION
Caltrans
DESIGN

SUMMARY OF QUANTITIES
Q-14

LAST REVISION 08-19-13 | DATE PLOTTED => 31-OCT-2013 | TIME PLOTTED => 15:25

Dist	COUNTY	ROUTE	POST MILES TOTAL PROJECT	SHEET No.	TOTAL SHEETS
11	SD	5	R58.1/R72.4	213	259

07-12-13
REGISTERED CIVIL ENGINEER DATE

11-04-13
PLANS APPROVAL DATE

REGISTERED PROFESSIONAL ENGINEER ABDUL MALIKYAR No. C66169 Exp. 06-30-14 CIVIL STATE OF CALIFORNIA

THE STATE OF CALIFORNIA OR ITS OFFICERS OR AGENTS SHALL NOT BE RESPONSIBLE FOR THE ACCURACY OR COMPLETENESS OF SCANNED COPIES OF THIS PLAN SHEET.

REPLACE CONCRETE PAVEMENT

ROUTE	SHEET No.	LANE No.	RAPID STRENGTH CONCRETE (N)	JOINTED PLAIN CONCRETE PAVEMENT (RSC) (N)	PRECAST PRESTRESSED CONCRETE (N)	WIDTH (N)	INDIVIDUAL SLAB REPLACEMENT (RSC)	LEAN CONCRETE BASE RAPID SETTING	JOINTED PLAIN CONCRETE PAVEMENT (RSC)	GRIND EXISTING CONCRETE PAVEMENT	PRECAST PRESTRESSED CONCRETE PAVEMENT	RAPID STRENGTH CONCRETE BASE	REMOVE CONCRETE PAVEMENT AND BASE	DOWEL BAR (DRILL AND BOND)	REMARKS
			LENGTH												
			LF	LF	LF	LF	CY	CY	CY	SQYD	CY	CY	CY	EA	
ROUTE 5 SOUTHBOUND	L-55	1				12									
		2				12									
		3	67.9			12	22.6	15.1						32	
		4	349.2			12	116.4	77.6						64	
	L-56	1				12									
		2				12									
		3	21.0			12	7.0	4.7						16	
		4	129.4			12	43.1	28.8						80	
	L-57	1				12									
		2				12									
		3	26.0			12	8.7	5.8						16	
		4	26.0			12	8.7	5.8						16	
Q-15 SUB TOTAL							206.5	137.8	-	-	-	-	-	224	
Q-7 SUB TOTAL							296.1	197.4	122.5	59.5	-	45.1	167.7	224	
Q-8 SUB TOTAL							456.2	304.0	6,908.6	3,356.4	-	2,545.3	9,453.9	224	
Q-9 SUB TOTAL							234.4	156.3	11,077.5	3,640.8	-	4,081.0	14,283.3	400	
Q-10 SUB TOTAL							1,479.5	986.4	929.6	451.6	-	342.5	1,272.1	1,360	
Q-11 SUB TOTAL							3,612.0	2,407.9	530.2	257.6	-	195.3	725.5	2,656	
Q-12 SUB TOTAL							1,417.4	945.0	5,408.4	2,627.6	-	1,992.5	7,401.0	1,152	
Q-13 SUB TOTAL							520.0	520.6	11,575.9	5,092.8	988.5	3,995.2	16,023.7	400	
Q-14 SUB TOTAL							890.8	594.0	2,073.7	1,007.5	-	764.1	2,073.7	1,176	
TOTAL			9,112.9	6,249.4			38,626.4			16,493.8*	988.5	13,961.0	51,400.9	7,816	

(N) - NOT A SEPARATE PAY ITEM, FOR INFORMATION ONLY

(RSC) - RAPID SET CONCRETE

* FOR ADDITIONAL QUANTITIES, SEE ROADWAY QUANTITIES TABLE.

SEAL ISOLATION JOINT

LOCATION			DIRECTION	TYPE	LF	SEE NOTE
LINE	FROM	TO				
"SD-5"	3272+98.23	3274+32.03	NORTHBOUND	LONGITUDINAL	133.8	2
"SD-5"	3618+64.21	3629+83.16	SOUTHBOUND	LONGITUDINAL	1,118.95	1
"SD-5"	3400+44.74	3571+87.09	NORTHBOUND	LONGITUDINAL	17,142.35	2
"SD-5"	3402+39.45	3570+88.25	SOUTHBOUND	LONGITUDINAL	16,848.80	2
"SD-5"	3619+37.57	3645+34.14	NORTHBOUND	LONGITUDINAL	2,596.57	2
"SD-5"	3629+83.16	3658+16.87	SOUTHBOUND	LONGITUDINAL	2,833.71	2
"SD-5"/ "SD-5R/"OR-5"	3835+30.02	32+10.93	NORTHBOUND	LONGITUDINAL	1598.21	2
				TOTAL	42,272.39	

NOTE 1) SEAL ISOLATION JOINT BETWEEN LANES 2 AND 3. SEE PPCP DETAIL, C-3, AND C-15

2) SEAL ISOLATION JOINT AT JPCP(RSC) LANE REPLACEMENT BETWEEN LANES 2 AND 3.

SEAL CONCRETE PAVEMENT JOINT (SILICONE)

LOCATION			DIRECTION	TYPE	LF	SEE NOTE
LINE	FROM	TO				
"SD-5"/ "SD-5L/"OR-5"	3099+00	32+50.09	SOUTHBOUND	LONGITUDINAL	205,011.6	1
"SD-5"/ "SD-5R/"OR-5"	3099+00	32+80.83	NORTHBOUND	LONGITUDINAL	204,423.37	1
"TSS"	3570+92.62	3574+97.92	SOUTHBOUND	TRANSVERSE	540	2
				TOTAL	409,974.97	

NOTE 1) SEAL ALL LONGITUDINAL JOINTS EXCEPT FOR THOSE QUANTIFIED IN THE "SEAL ISOLATION JOINT" TABLE.

2) SEAL ALL TRANSVERSE JOINTS ON "TSS" LINE.

SUMMARY OF QUANTITIES
Q-15

REVISED BY | DATE REVISED

ABDUL MALIKYAR | RYAN MUNZ

CALCULATED-DESIGNED BY | CHECKED BY

FUNCTIONAL SUPERVISOR: EDWARD HAJJ

STATE OF CALIFORNIA - DEPARTMENT OF TRANSPORTATION

Caltrans® DESIGN

LAST REVISION 10-28-13 | DATE PLOTTED => 31-OCT-2013 | TIME PLOTTED => 15:25

Dist	COUNTY	ROUTE	POST MILES TOTAL PROJECT	SHEET No.	TOTAL SHEETS
11	SD	5	R58.1/R72.4	214	259

07-12-13
REGISTERED CIVIL ENGINEER DATE

11-04-13
PLANS APPROVAL DATE

REGISTERED PROFESSIONAL ENGINEER ABDUL MALIKYAR No. C66169 Exp. 06-30-14 CIVIL STATE OF CALIFORNIA

THE STATE OF CALIFORNIA OR ITS OFFICERS OR AGENTS SHALL NOT BE RESPONSIBLE FOR THE ACCURACY OR COMPLETENESS OF SCANNED COPIES OF THIS PLAN SHEET.

UNDERDRAIN

LOCATION				4" PERFORATED PLASTIC PIPE UNDERDRAIN	4" PLASTIC PIPE UNDERDRAIN	SYNTHETIC SUBSURFACE DRAINAGE LAYER	MINOR CONRETE (MINOR STRUCTURE) (N)	TEMPORARY FIBER ROLL	DESCRIPTION
SHEET No.	DIRECTION	STATION BEGIN	STATION END				Conc COLLAR Mod L-1		
				LF	LF	SQYD	CY	LF	
L-10	Rte 5 NB	3220+58.80	3222+56.31	197.5	28.0	280		158	HMA OSD
L-21		3373+58.02	3379+38.82	580.8	28.0	823		531	HMA OSD
L-25		3431+08.23	3437+89.64	681.4	14.0	965	0.06	681	SCSP
L-30		3488+45.44	3497+61.54	916.1	28.0	1298		796	HMA OSD
L-31		3502+39.88	3507+53.47	513.6	9.0	728	0.03	494	Exist OMP INLET
L-34		3540+02.95	3544+54.76	451.8	28.0	640		402	HMA OSD
L-40		3628+68.82	3633+42.95	474.1	14.0	672	0.06	474	SCSP
L-47		3724+97.72	3728+11.18	313.5	28.0	444		313	DAYLIGHT TO SLOPE
L-50		3761+41.55	3764+31.23	289.7	14.0	410	0.06	290	SCSP
L-52	Rte 5 NB	3782+28.88	3785+27.45	298.6	28.0	423		259	HMA OSD
L-1	Rte 5 SB	3105+36.92	3108+78.55	341.6	28.0	484		302	HMA OSD
L-5		3156+36.85	3164+25.21	788.4	14.0	1117		758	HMA OSD
L-6		3174+86.96	3176+91.44	204.5	14.0	290	0.06	204	SCSP
L-10		3220+86.47	3222+91.44	205.0	14.0	290	0.06	205	SCSP
L-11		3233+13.10	3244+50.00	1136.9	14.0	1611		1122	HMA OSD
L-12		3244+50.00	3247+51.57	301.6	14.0	427		1265	HMA OSD
L-12		3247+51.57	3257+55.15	1003.6	9.0	1422	0.03	217	Exist OCP INLET
L-13		3266+94.69	3269+32.04	237.3	14.0	336		79	HMA OSD
L-14		3273+45.82	3274+44.67	98.8	14.0	140	0.03	341	PIPE DD
L-15		3282+58.86	3287+39.75	480.9	28.0	681		90	HMA OSD
L-15		3292+31.11	3293+54.13	123.0	14.0	174	0.06	123	SCSP
L-18		3328+81.20	3330+67.05	185.8	28.0	263		156	HMA OSD
L-18		3333+92.89	3343+17.72	924.8	10.0	1310	0.06	925	Exist Dbl G2 INLET
L-23		3404+27.64	3407+81.18	353.5	7.0	501	0.03	354	G2 INLET
L-24		3414+64.75	3418+80.40	415.7	7.0	589	0.03	416	G2 INLET
L-25		3420+49.73	3422+84.68	235.0	7.0	333	0.03	0	G2 INLET
L-25		3424+09.06	3426+39.86	230.8	7.0	327	0.03	231	G2 INLET
L-25		3427+70.27	3434+35.97	665.7	14.0	943	0.06	237	G2 INLET
L-30		3490+22.55	3493+33.65	311.1	28.0	441	0.06	281	PIPE DD
L-34		3541+73.71	3544+65.91	292.2	28.0	414		242	HMA OSD
L-39		3607+66.42	3612+21.68	455.3	14.0	645		455	HMA OSD
L-40		3618+64.21	3624+24.00	559.8	14.0	793		510	HMA OSD
L-40		3629+83.16	3636+10.00	626.8	28.0	888	0.06	557	PIPE DD
L-49		3742+69.60	3745+13.57	244.0	28.0	346		214	DAYLIGHT TO SLOPE
L-50		3761+88.96	3764+19.80	230.8	14.0	327	0.06	231	Exist G2 INLET
L-55	Rte 5 SB	3822+65.22	3825+33.39	268.2	14.0	380	0.06	121	G2 INLET
TOTAL				15,638	644	22155		14,034 **	

(N) - NOT A SEPARATE PAY ITEM, FOR INFORMATION ONLY

** FOR ADDITIONAL QUANTITIES, SEE TEMPORARY WATER POLLUTION CONTROL QUANTITIES

SUMMARY OF QUANTITIES
Q-16

STATE OF CALIFORNIA - DEPARTMENT OF TRANSPORTATION
Caltrans
DESIGN
FUNCTIONAL SUPERVISOR: EDWARD HAJJ
CALCULATED-DESIGNED BY: HECTOR GRACIA
CHECKED BY: ABDUL MALIKYAR
REVISED BY
DATE REVISED

LAST REVISION 08-19-13
DATE PLOTTED => 31-OCT-2013
TIME PLOTTED => 15:25

Dist	COUNTY	ROUTE	POST MILES TOTAL PROJECT	SHEET No.	TOTAL SHEETS
11	SD	5	R58.1/R72.4	215	259

07-12-13
REGISTERED CIVIL ENGINEER DATE

11-04-13
PLANS APPROVAL DATE

REGISTERED PROFESSIONAL ENGINEER ABDUL MALIKYAR No. C66169 Exp. 06-30-14 CIVIL STATE OF CALIFORNIA

THE STATE OF CALIFORNIA OR ITS OFFICERS OR AGENTS SHALL NOT BE RESPONSIBLE FOR THE ACCURACY OR COMPLETENESS OF SCANNED COPIES OF THIS PLAN SHEET.

(HMA) Misc AREA

SHEET No.	DIRECTION	STATION	DESCRIPTION	CASE*	LENGTH A (LF)	LENGTH B (LF)	PLACE HOT MIX ASPHALT (Misc AREA) SQYD	MINOR HOT MIX ASPHALT TON	ASPHALTIC EMULSION (FOG SEAL COAT) TON
L-1	Rte 5 SB	3099+62.69	MODIFIED HMA OSD	1	3	15	4.58	0.189	0.002
L-1		3100+95.52	MODIFIED HMA OSD	1	3	15	4.58	0.189	0.002
L-1		3103+47.29	MODIFIED HMA OSD	1	3	15	4.58	0.189	0.002
L-1		3107+41.85	MODIFIED HMA OSD	2	20	20	9.06	0.372	0.003
L-2		3115+42.06	MODIFIED HMA OSD	2	20	15	8.05	0.331	0.003
L-3		3125+48.66	MODIFIED HMA OSD	2	10	15	6.01	0.247	0.002
L-4		3143+13.68	HMA GUTTER FLARE AT OMP INLET	5	1	20	4.28	0.175	0.001
L-5		3152+41.18	HMA GUTTER FLARE AT OMP INLET	5	1	30	6.31	0.259	0.002
L-5		3156+45.35	MODIFIED HMA OSD	2	3	10	3.56	0.147	0.001
L-5		3161+23.08	MODIFIED HMA OSD	1	3	9	3.36	0.138	0.001
L-6		3169+39.04	HMA GUTTER FLARE AT OMP INLET	5	1	20	4.28	0.175	0.001
L-6		3172+58.88	MODIFIED HMA OSD	1	3	25	6.62	0.272	0.002
L-7		3180+64.75	HMA GUTTER FLARE AT Exist PIPE DD	3	5	3	1.63	0.067	0.001
L-8		3203+18.29	MODIFIED HMA OSD	2	3	15	4.58	0.189	0.002
L-9		3209+78.70	MODIFIED HMA OSD	1	3	20	5.60	0.230	0.002
L-9		3212+69.32	MODIFIED HMA OSD	2	3	15	4.58	0.189	0.002
L-10		3217+90.50	MODIFIED HMA OSD	1	3	20	5.60	0.230	0.002
L-10		3224+58.50	MODIFIED HMA OSD	1	3	3	2.14	0.088	0.001
L-11		3233+15.51	MODIFIED HMA OSD	2	10	15	6.01	0.247	0.002
L-12		3247+51.56	MODIFIED HMA OSD	1	3	20	5.60	0.230	0.002
L-12		3257+39.70	HMA GUTTER FLARE AT OCP INLET	5	1	15	3.26	0.134	0.001
L-13		3264+39.32	HMA GUTTER FLARE AT OCP INLET	5	1	20	4.28	0.175	0.001
L-13		3269+32.00	MODIFIED HMA OSD	1	3	20	5.60	0.230	0.002
L-14		3274+44.67	HMA GUTTER FLARE AT Exist PIPE DD	3	3	14	3.46	0.142	0.001
L-14		3281+39.74	HMA GUTTER FLARE AT Exist PIPE DD	4	10	15	5.09	0.209	0.002
L-15		3286+87.55	MODIFIED HMA OSD	2	25	25	11.10	0.456	0.004
L-15		3290+16.61	MODIFIED HMA OSD	2	3	15	4.58	0.189	0.002
L-16		3310+26.49	MODIFIED HMA OSD	2	5	5	2.95	0.122	0.001
L-18		3330+10.25	MODIFIED HMA OSD	1	3	25	6.62	0.272	0.002
L-19		3354+17.25	MODIFIED HMA OSD	2	20	15	8.05	0.331	0.003
L-20		3360+41.97	HMA GUTTER FLARE AT Exist PIPE DD	4	5	15	4.07	0.167	0.001
L-20		3366+90.31	HMA GUTTER FLARE AT Exist PIPE DD	4	15	15	6.11	0.251	0.002
L-22		3393+65.75	HMA GUTTER FLARE AT Exist PIPE DD	4	15	15	6.11	0.251	0.002
L-23		3403+01.26	HMA GUTTER FLARE AT Exist PIPE DD	4	3	9	2.44	0.100	0.001
L-26		3447+39.13	MODIFIED HMA OSD	2	20	20	9.06	0.372	0.003
L-29		3479+39.24	MODIFIED HMA OSD	2	10	20	7.03	0.289	0.002
L-30	Rte 5 SB	3488+66.95	MODIFIED HMA OSD	1	3	15	4.58	0.189	0.002
SHEET Q-17 SUBTOTAL							195.40	8.032	0.068

CASE * - SEE CONSTRUCTION DETAILS SHEETS

SUMMARY OF QUANTITIES
Q-17

STATE OF CALIFORNIA - DEPARTMENT OF TRANSPORTATION
Caltrans DESIGN

FUNCTIONAL SUPERVISOR: EDWARD HAJJ
CALCULATED-DESIGNED BY: HECTOR GRACIA
CHECKED BY: ABDUL MALIKYAR
REVISED BY
DATE REVISED

LAST REVISION 08-19-13
DATE PLOTTED => 31-OCT-2013
TIME PLOTTED => 15:25

Dist	COUNTY	ROUTE	POST MILES TOTAL PROJECT	SHEET No.	TOTAL SHEETS
11	SD	5	R58.1/R72.4	216	259

07-12-13
REGISTERED CIVIL ENGINEER DATE

11-04-13
PLANS APPROVAL DATE

REGISTERED PROFESSIONAL ENGINEER ABDUL MALIKYAR No. C66169 Exp. 06-30-14 CIVIL STATE OF CALIFORNIA

THE STATE OF CALIFORNIA OR ITS OFFICERS OR AGENTS SHALL NOT BE RESPONSIBLE FOR THE ACCURACY OR COMPLETENESS OF SCANNED COPIES OF THIS PLAN SHEET.

(HMA) Misc AREA

SHEET No.	DIRECTION	STATION	DESCRIPTION	CASE*	LENGTH A	LENGTH B	PLACE HOT MIX ASPHALT (Misc AREA)	MINOR HOT MIX ASPHALT	ASPHALTIC EMULSION (FOG SEAL COAT)
					LF		SQYD	TON	TON
L-30	Rte 5 SB	3491+26.18	HMA GUTTER FLARE AT Exist PIPE DD	4	10	15	5.09	0.209	0.002
L-30		3500+96.35	MODIFIED HMA OSD	2	10	15	6.01	0.247	0.002
L-33		3531+43.39	MODIFIED HMA OSD	1	3	15	4.58	0.189	0.002
L-34		3541+40.06	HMA GUTTER FLARE AT OMP INLET	5	1	20	4.28	0.175	0.001
L-34		3542+81.71	MODIFIED HMA OSD	2	30	20	11.10	0.456	0.004
L-35		3558+31.98	MODIFIED HMA OSD	2	30	15	10.08	0.414	0.003
L-35		3565+49.65	MODIFIED HMA OSD	2	10	15	6.01	0.247	0.002
L-36		3578+40.33	HMA GUTTER FLARE AT OMP INLET	5	1	30	6.31	0.259	0.002
L-37		3592+72.55	HMA GUTTER FLARE AT Exist PIPE DD	4	15	15	6.11	0.251	0.002
L-38		3596+89.76	HMA GUTTER FLARE AT Exist PIPE DD	4	20	15	7.13	0.292	0.002
L-39		3612+12.06	MODIFIED HMA OSD	1	3	15	4.58	0.189	0.002
L-40		3622+90.27	HMA GUTTER FLARE AT OMP INLET	5	1	20	4.28	0.175	0.001
L-40		3624+20.59	MODIFIED HMA OSD	1	3	25	6.62	0.272	0.002
L-40		3631+35.51	HMA GUTTER FLARE AT Exist PIPE DD	4	20	20	8.15	0.334	0.003
L-41		3635+86.88	MODIFIED HMA OSD	2	15	15	7.03	0.289	0.002
L-42		3651+41.56	MODIFIED HMA OSD	1	3	15	4.58	0.189	0.002
L-43		3667+43.97	HMA GUTTER FLARE AT OMP INLET	5	1	20	4.28	0.175	0.001
L-43		3674+39.39	HMA GUTTER FLARE AT Exist PIPE DD	3	3	15	3.67	0.150	0.001
L-44		3682+54.12	MODIFIED HMA OSD	1	3	20	5.60	0.230	0.002
L-45		3692+38.64	HMA GUTTER FLARE AT OCP INLET	5	1	16	3.46	0.142	0.001
L-48		3734+40.06	HMA GUTTER FLARE AT OCP INLET	5	1	22	4.68	0.192	0.002
L-49		3743+99.89	MODIFIED HMA OSD	1	3	25	6.62	0.272	0.002
L-51		3770+36.87	HMA GUTTER FLARE AT Exist PIPE DD	4	20	15	7.13	0.292	0.002
L-52		3783+79.26	MODIFIED HMA OSD	2	10	15	6.01	0.247	0.002
L-52		3785+57.09	MODIFIED HMA OSD	2	10	15	6.01	0.247	0.002
L-52		3787+60.24	MODIFIED HMA OSD	2	10	15	6.01	0.247	0.002
L-52		3789+63.72	MODIFIED HMA OSD	2	10	15	6.01	0.247	0.002
L-52		3791+74.47	MODIFIED HMA OSD	2	10	15	6.01	0.247	0.002
L-53	Rte 5 SB	3792+59.33	MODIFIED HMA OSD	2	15	15	7.03	0.289	0.002
L-3	Rte 5 NB	3132+66.86	MODIFIED HMA OSD	1	3	15	4.58	0.189	0.002
L-5		3162+22.10	MODIFIED HMA OSD	1	3	15	4.58	0.189	0.002
L-6		3172+91.05	MODIFIED HMA OSD	2	10	15	6.01	0.247	0.002
L-7		3180+13.92	HMA GUTTER FLARE AT Exist PIPE DD	3	3	15	3.67	0.150	0.001
L-7		3184+56.15	MODIFIED HMA OSD	1	3	15	4.58	0.189	0.002
L-7		3188+88.96	HMA GUTTER FLARE AT OMP INLET	5	1	20	4.28	0.175	0.001
L-9		3209+17.99	MODIFIED HMA OSD	2	10	15	6.01	0.247	0.002
L-10	Rte 5 NB	3219+45.29	MODIFIED HMA OSD	2	10	15	6.01	0.247	0.002
SHEET Q-18 SUBTOTAL							214.18	8.797	0.071

CASE * - SEE CONSTRUCTION DETAILS SHEETS

SUMMARY OF QUANTITIES
Q-18

STATE OF CALIFORNIA - DEPARTMENT OF TRANSPORTATION
Caltrans DESIGN

FUNCTIONAL SUPERVISOR: EDWARD HAJJ
CALCULATED-DESIGNED BY: HECTOR GRACIA
CHECKED BY: ABDUL MALIKYAR
REVISED BY
DATE REVISED

LAST REVISION 08-19-13 | DATE PLOTTED => 31-OCT-2013 | TIME PLOTTED => 15:25

Dist	COUNTY	ROUTE	POST MILES TOTAL PROJECT	SHEET No.	TOTAL SHEETS
11	SD	5	R58.1/R72.4	217	259

REGISTERED CIVIL ENGINEER 07-12-13 DATE

11-04-13
PLANS APPROVAL DATE

REGISTERED PROFESSIONAL ENGINEER ABDUL MALIKYAR No. C66169 Exp. 06-30-14 CIVIL STATE OF CALIFORNIA

THE STATE OF CALIFORNIA OR ITS OFFICERS OR AGENTS SHALL NOT BE RESPONSIBLE FOR THE ACCURACY OR COMPLETENESS OF SCANNED COPIES OF THIS PLAN SHEET.

(HMA) Misc AREA

SHEET No.	DIRECTION	STATION	DESCRIPTION	CASE*	LENGTH A (LF)	LENGTH B (LF)	PLACE HOT MIX ASPHALT (Misc AREA) SQYD	MINOR HOT MIX ASPHALT TON	ASPHALTIC EMULSION (FOG SEAL COAT) TON
L-10	Rte 5 NB	3221+59.44	MODIFIED HMA OSD	2	20	20	9.06	0.372	0.003
L-10		3225+68.74	MODIFIED HMA OSD	1	3	15	4.58	0.189	0.002
L-13		3270+21.00	MODIFIED HMA OSD	2	10	15	6.01	0.247	0.002
L-14		3280+70.58	HMA GUTTER FLARE AT Exist PIPE DD	4	15	15	6.11	0.251	0.002
L-16		3310+19.59	MODIFIED HMA OSD	1	3	20	5.60	0.230	0.002
L-17		3321+60.13	MODIFIED HMA OSD	2	15	15	7.03	0.289	0.002
L-18		3339+34.15	MODIFIED HMA OSD	1	3	15	4.58	0.189	0.002
L-19		3343+39.46	HMA GUTTER FLARE AT OCP INLET	5	1	20	4.28	0.175	0.001
L-19		3348+41.10	MODIFIED HMA OSD	1	3	15	4.58	0.189	0.002
L-19		3353+39.26	HMA GUTTER FLARE AT OCP INLET	5	1	20	4.28	0.175	0.001
L-20		3364+39.96	HMA GUTTER FLARE AT OMP INLET	5	1	20	4.28	0.175	0.001
L-21		3372+64.44	HMA GUTTER FLARE AT OMP INLET	5	1	20	4.28	0.175	0.001
L-21		3374+52.72	MODIFIED HMA OSD	2	15	15	7.03	0.289	0.002
L-21		3377+41.78	MODIFIED HMA OSD	2	10	20	7.03	0.289	0.002
L-23		3401+44.15	HMA GUTTER FLARE AT Exist PIPE DD	3	3	9	2.44	0.100	0.001
L-26		3441+39.49	HMA GUTTER FLARE AT OMP INLET	5	1	20	4.28	0.175	0.001
L-29		3487+00.00	HMA OSD	2	10	15	6.01	0.247	0.002
L-30		3491+26.15	MODIFIED HMA OSD	2	66	34	21.28	0.873	0.007
L-30		3493+50.00	HMA OSD	1	3	15	4.58	0.189	0.002
L-31		3502+38.89	HMA GUTTER FLARE AT OMP INLET	5	1	20	4.28	0.175	0.001
L-31		3509+54.82	HMA GUTTER FLARE AT Exist PIPE DD	3	3	15	3.67	0.150	0.001
L-32		3518+48.30	MODIFIED HMA OSD	1	3	25	6.62	0.272	0.002
L-32		3525+79.86	HMA GUTTER FLARE AT Exist PIPE DD	4	20	15	7.13	0.292	0.002
L-33		3535+72.89	MODIFIED HMA OSD	2	20	15	8.05	0.331	0.003
L-34		3542+88.50	MODIFIED HMA OSD	2	25	25	11.10	0.456	0.004
L-34		3545+00.00	HMA OSD	1	3	15	4.58	0.189	0.002
L-39		3616+21.33	MODIFIED HMA OSD	2	20	15	8.05	0.331	0.003
L-42		3659+48.00	MODIFIED HMA OSD	2	20	15	8.05	0.331	0.003
L-45		3698+40.11	MODIFIED HMA OSD	2	25	15	9.06	0.372	0.003
L-51		3773+49.19	HMA GUTTER FLARE AT Exist PIPE DD	3	3	20	4.68	0.192	0.002
L-52		3782+29.41	MODIFIED HMA OSD	1	3	15	4.58	0.189	0.002
L-52		3785+05.23	MODIFIED HMA OSD	1	3	15	4.58	0.189	0.002
L-52		3788+56.33	MODIFIED HMA OSD	1	3	20	5.60	0.230	0.002
L-52		3790+76.38	MODIFIED HMA OSD	1	3	20	5.60	0.230	0.002
L-53	Rte 5 NB	3792+91.89	HMA GUTTER FLARE AT OCP INLET	5	1	27	5.70	0.234	0.002
L-16	LPR-1	3310+65.14	MODIFIED HMA OSD	1	3	15	4.58	0.189	0.002
L-16	LPR-4	3309+92.23	MODIFIED HMA OSD	2	15	15	7.03	0.289	0.002
L-17	LPR-4	3315+10.71	MODIFIED HMA OSD	2	15	15	7.03	0.289	0.002
L-53	R2	3793+16.56	MODIFIED HMA OSD	1	3	15	4.58	0.189	0.002
L-53	R2	3798+55.64	MODIFIED HMA OSD	1	3	15	4.58	0.189	0.002
L-53	BR	63+31.81	MODIFIED CURB RAMP	-	-	-	14.03	2.340	0.005
L-53	BR	67+37.32	MODIFIED CURB RAMP	-	-	-	6.96	1.160	0.002
L-57	CRI	62+40.26	MODIFIED CURB RAMP	-	-	-	2.86	0.480	0.001
L-57	CRI	62+50.80	MODIFIED CURB RAMP	-	-	-	2.22	0.370	0.001
L-57	CRI	63+23.10	MODIFIED CURB RAMP	-	-	-	2.67	0.440	0.001
L-57	CRI	62+50.80	MODIFIED CURB RAMP	-	-	-	2.67	0.440	0.001
SHEET Q-19 SUBTOTAL							279.02	15.546	0.095
SHEET Q-17 SUBTOTAL							195.40	8.032	0.068
SHEET Q-18 SUBTOTAL							214.18	8.797	0.071
TOTAL							688.60 ***	32.375***	0.234**

CASE * - SEE CONSTRUCTION DETAILS SHEETS

** - FOR ADDITIONAL QUANTITIES, SEE ROADWAY QUANTITIES TABLE AND HOT MIX ASPHALT DIKE TABLE.
*** - FOR ADDITIONAL QUANTITIES, SEE HOT MIX ASPHALT DIKE TABLE AND CONCRETE BARRIER TABLE.

SUMMARY OF QUANTITIES
Q-19

STATE OF CALIFORNIA - DEPARTMENT OF TRANSPORTATION
Caltrans DESIGN
FUNCTIONAL SUPERVISOR: EDWARD HAJJ
CALCULATED-DESIGNED BY: HECTOR GRACIA
CHECKED BY: ABDUL MALIKYAR
REVISED BY
DATE REVISED

LAST REVISION 10-11-13 DATE PLOTTED => 31-OCT-2013 TIME PLOTTED => 15:57

Dist	COUNTY	ROUTE	POST MILES TOTAL PROJECT	SHEET No.	TOTAL SHEETS
11	SD	5	R58.1/R72.4	218	259

07-12-13
REGISTERED CIVIL ENGINEER DATE

11-04-13
PLANS APPROVAL DATE

REGISTERED PROFESSIONAL ENGINEER ABDUL MALIKYAR No. C66169 Exp. 06-30-14 CIVIL STATE OF CALIFORNIA

THE STATE OF CALIFORNIA OR ITS OFFICERS OR AGENTS SHALL NOT BE RESPONSIBLE FOR THE ACCURACY OR COMPLETENESS OF SCANNED COPIES OF THIS PLAN SHEET.

HOT MIX ASPHALT DIKE

LINE	SHEET	DIRECTION	STATION FROM	LIMITS TO	REMOVE AC DIKE LF	PLACE HMA DIKE (TYPE E) LF	PLACE HMA DIKE (TYPE A) LF	PLACE HMA DIKE (TYPE F) LF	PLACE HMA DIKE (TYPE C) LF	PLACE HMA DIKE (TYPE D) LF	MINOR HOT MIX ASPHALT TON	HOT MIX ASPHALT (TYPE A) TON	RHMA (GAP GRADED) TON	TACK COAT TON	ASPHALTIC EMULSION (FOG SEAL COAT) TON
"SD-5"	L-1	SB	3099+00.00	3111+00.00	858.37	1,146.00					29.80	11.29		0.040	0.054
"SD-5"	L-2		3111+00.00	3124+50.00	1,350.00	1,315.00					34.19	12.96		0.046	0.061
"SD-5"	L-3		3124+50.00	3132+69.98	819.98	794.98					20.67	7.83		0.028	0.037
"SD-5"	L-3		3133+03.86	3138+50.00	546.14		546.14				14.75	3.71		0.013	0.018
"SD-5"	L-4		3138+50.00	3151+50.00	1,300.00		1,279.00				34.53	8.69		0.031	0.041
"SD-5"	L-5		3151+50.00	3156+76.30	486.85		482.30				13.02	3.28		0.012	0.016
"SD-5"	L-5		3156+76.30	3161+41.24	16.03			420.94			5.56	2.09		0.007	0.010
"SD-5"	L-5		3161+41.24	3161+97.93	56.69				56.69		0.43	0.28		0.001	0.001
"SD-5"	L-5		3161+97.93	3164+50.00	252.07		252.07				6.81	1.71		0.006	0.008
"SD-5"	L-6		3164+50.00	3172+63.56	813.56		764.56				20.64	5.19		0.019	0.025
"SD-5"	L-6		3172+63.56	3177+50.00	281.96	486.44					12.65	4.79		0.017	0.023
"SD-5"	L-7		3177+50.00	3179+24.33	174.33	174.33					4.53	1.72		0.006	0.008
			ALISO	CREEK	BRIDGE	BRIDGE	BRIDGE	BRIDGE	BRIDGE	BRIDGE	BRIDGE	BRIDGE			BRIDGE
"SD-5"	L-7		3180+48.24	3180+89.22	40.98			32.98			0.44	0.16		0.001	0.001
"SD-5"	L-7		3180+89.22	3181+37.69	48.47				48.47		0.37	0.24		0.001	0.001
"SD-5"	L-7		3181+37.69	3190+17.39	879.70	879.70					22.87	8.67		0.031	0.041
"SD-5"	L-7		3190+26.66	3190+50.00	23.34	23.34					0.61	0.23		0.001	0.001
"SD-5"	L-8		3190+50.00	3203+48.68	1,298.68	1,280.68					33.30	12.62		0.045	0.060
"SD-5"	L-8		3203+78.57	3204+00.00	21.43	21.43					0.56	0.21		0.001	0.001
"SD-5"	L-9		3204+00.00	3217+50.00	1,350.00	1,309.00					34.03	12.90		0.046	0.061
"SD-5"	L-10		3217+50.00	3219+40.43	190.43	167.43					4.35	1.65		0.006	0.008
"SD-5"	L-10		3219+40.43	3224+80.62	335.22			534.19			7.05	2.65		0.009	0.013
"SD-5"	L-10		3224+80.62	3225+33.63	53.01				53.01		0.40	0.26		0.001	0.001
"SD-5"	L-10		3225+33.63	3231+50.00	616.37	616.37					16.03	6.07		0.022	0.029
"SD-5"	L-11		3231+50.00	3244+50.00	163.10	1,275.00					33.15	12.56		0.045	0.060
"SD-5"	L-12		3244+50.00	3247+54.56	(0.00)	281.56					7.32	2.77		0.010	0.013
"SD-5"	L-12		3247+54.56	3258+50.00	94.85		1,079.44				29.14	7.33		0.026	0.035
"SD-5"	L-13		3258+50.00	3269+72.81	885.46		1,078.81				29.13	7.33		0.026	0.035
"SD-5"	L-13		3269+72.81	3272+50.00	277.19			277.19			3.66	1.38		0.005	0.007
"SD-5"	L-14		3272+50.00	3274+82.12	133.27			215.12			2.84	1.07		0.004	0.005
	LAS		FLORES	CREEK	BRIDGE	BRIDGE	BRIDGE	BRIDGE	BRIDGE	BRIDGE	BRIDGE	BRIDGE			BRIDGE
"SD-5"	L-14		3277+12.86	3277+50.34	37.48			37.48			0.49	0.19		0.001	0.001
"SD-5"	L-14		3277+50.34	3278+00.08	49.74				49.74		0.38	0.25		0.001	0.001
"SD-5"	L-14		3278+00.08	3286+00.00	458.78					774.92	45.41	12.46		0.044	0.059
"SD-5"	L-15		3286+00.00	3299+50.00	1,087.23					1,282.00	75.13	20.61		0.073	0.098
"SD-5"	L-16		3299+50.00	3299+76.85	26.85	26.85					0.70	0.26		0.001	0.001
"SD-5"	L-16		3300+36.09	3308+66.28	830.19	830.19					21.58	8.18		0.029	0.039
LAS	PULGAS		ROAD	OVERCROSSING	BRIDGE	BRIDGE	BRIDGE	BRIDGE	BRIDGE	BRIDGE	BRIDGE	BRIDGE			BRIDGE
"SD-5"	L-16		3310+12.15	3310+49.33	37.18			37.18			0.49	0.18		0.001	0.001
"SD-5"	L-16		3310+49.33	3311+11.83	62.50				62.50		0.48	0.31		0.001	0.002
"SD-5"	L-16		3311+11.83	3313+00.00	188.17	188.17					4.89	1.85		0.007	0.009
"SD-5"	L-17		3313+00.00	3318+98.71	598.71	598.71					15.57	5.90		0.021	0.028
"SD-5"	L-17		3319+50.88	3320+20.78	69.90	69.90					1.82	0.69		0.002	0.003
"SD-5"	L-17		3320+20.78	3320+95.52	74.74			74.74			0.99	0.37		0.001	0.002
"SD-5"	L-17	↓	3320+95.52	3321+45.43	49.91				49.91		0.38	0.25		0.001	0.001
"SD-5"	L-17	SB	3321+45.43	3326+50.00	504.57	504.57					13.12	4.97		0.018	0.024
SHEET Q-20 SUBTOTAL					17,443.43	11,989.65	5,482.32	1,629.82	320.32	2,056.92	604.26	198.11		0.707	0.943

SUMMARY OF QUANTITIES
Q-20

STATE OF CALIFORNIA - DEPARTMENT OF TRANSPORTATION
Caltrans® DESIGN

FUNCTIONAL SUPERVISOR: EDWARD HAJJ
CALCULATED-DESIGNED BY: HECTOR GRACIA
CHECKED BY: ABDUL MALIKYAR
REVISED BY
DATE REVISED

LAST REVISION 08-19-13
DATE PLOTTED => 31-OCT-2013
TIME PLOTTED => 15:25

Dist	COUNTY	ROUTE	POST MILES TOTAL PROJECT	SHEET No.	TOTAL SHEETS
11	SD	5	R58.1/R72.4	219	259

07-12-13
REGISTERED CIVIL ENGINEER DATE

11-04-13
PLANS APPROVAL DATE

REGISTERED PROFESSIONAL ENGINEER ABDUL MALIKYAR No. C66169 Exp. 06-30-14 CIVIL STATE OF CALIFORNIA

THE STATE OF CALIFORNIA OR ITS OFFICERS OR AGENTS SHALL NOT BE RESPONSIBLE FOR THE ACCURACY OR COMPLETENESS OF SCANNED COPIES OF THIS PLAN SHEET.

HOT MIX ASPHALT DIKE

LINE	SHEET	DIRECTION	STATION FROM	LIMITS TO	REMOVE AC DIKE LF	PLACE HMA DIKE (TYPE E) LF	PLACE HMA DIKE (TYPE A) LF	PLACE HMA DIKE (TYPE F) LF	PLACE HMA DIKE (TYPE C) LF	PLACE HMA DIKE (TYPE D) LF	MINOR HOT MIX ASPHALT TON	HOT MIX ASPHALT (TYPE A) TON	RHMA (GAP GRADED) TON	TACK COAT TON	ASPHALTIC EMULSION (FOG SEAL COAT) TON
"SD-5"	L-18	SB	3326+50.00	3336+39.14	557.04	961.14					24.99	9.47		0.034	0.045
"SD-5"	L-18		3336+39.14	3339+16.14				277.00			3.66	1.37		0.005	0.007
"SD-5"	L-18		3339+16.14	3339+90.42					74.28		0.56	0.37		0.001	0.002
"SD-5"	L-18		3339+90.42	3340+50.00		59.58					1.55	0.59		0.002	0.003
"SD-5"	L-19		3340+50.00	3340+68.75		18.75					0.49	0.18		0.001	0.001
"SD-5"	L-19		3354+37.25	3354+50.00		12.75					0.33	0.13		0.004	0.001
"SD-5"	L-20		3354+50.00	3368+50.00	1,400.00	1,350.00					35.10	13.30		0.047	0.063
"SD-5"	L-21		3368+50.00	3373+29.23	479.23	479.23					12.46	4.72		0.017	0.022
"SD-5"	L-21		3373+29.23	3373+80.76	51.53			51.53			0.68	0.26		0.001	0.001
"SD-5"	L-21		3373+80.76	3374+29.05	48.29				48.29		0.37	0.24		0.001	0.001
"SD-5"	L-21		3374+29.05	3376+24.10	195.05	195.05					5.07	1.92		0.007	0.009
"SD-5"	L-22		3382+96.71	3386+88.81	392.10	392.10					10.19	3.86		0.014	0.018
"SD-5"	L-22		3393+03.11	3395+50.00	246.89			246.89			3.26	1.23		0.004	0.006
"SD-5"	L-23		3395+50.00	3399+60.86	410.86			410.86			5.42	2.04		0.007	0.010
			AGRA	OVERHEAD	BRIDGE	BRIDGE	BRIDGE	BRIDGE	BRIDGE	BRIDGE	BRIDGE	BRIDGE			BRIDGE
"SD-5"	L-23		3402+79.29	3408+50.00	217.17			570.71			7.53	2.83		0.010	0.013
"SD-5"	L-24		3408+50.00	3421+50.00	784.08			1,300.00			17.16	6.45		0.023	0.031
"SD-5"	L-24		3421+50.00	3435+00.00	318.82			1,350.00			17.82	6.70		0.024	0.032
"SD-5"	L-26		3435+00.00	3437+99.25	299.25			299.25			3.95	1.49		0.005	0.007
"SD-5"	L-26		3437+99.25	3438+74.95	75.70				75.70		0.58	0.38		0.001	0.002
"SD-5"	L-26		3447+59.13	3448+50.00	90.87	90.87					2.36	0.90		0.003	0.004
"SD-5"	L-27		3448+50.00	3452+84.07	434.07	434.07					11.29	4.28		0.015	0.020
"SD-5"	L-28		3473+07.46	3475+50.00	242.54	242.54					6.31	2.39		0.009	0.011
"SD-5"	L-29		3475+50.00	3482+00.00	650.00	620.00					16.12	6.11		0.022	0.029
"SD-5"	L-29		3482+00.00	3488+50.00	650.00					650.00	38.09	10.45		0.037	0.050
"SD-5"	L-30		3488+50.00	3495+75.10	414.00					682.10	39.97	10.96		0.039	0.052
"SD-5"	L-30		3500+25.77	3501+50.00	124.23					124.23	7.28	2.00		0.007	0.010
"SD-5"	L-31		3501+50.00	3514+00.00	1,250.00					1,250.00	73.25	20.09		0.072	0.095
"SD-5"	L-32		3514+00.00	3520+36.29	636.29					636.29	37.29	10.23		0.036	0.049
"SD-5"	L-32		3524+56.07	3527+00.00	243.93	243.93					6.34	2.40		0.009	0.011
"SD-5"	L-33		3527+00.00	3540+50.00	1,350.00	1,332.00					34.63	13.12		0.047	0.062
"SD-5"	L-34		3540+50.00	3554+00.00	1,057.80	1,279.00					33.25	12.60		0.045	0.060
"SD-5"	L-35		3554+00.00	3567+00.00	1,300.00	1,230.00					31.98	12.12		0.043	0.058
"SD-5"	L-36		3567+00.00	3570+88.76	388.76	388.76					10.11	3.83		0.014	0.018
"SD-5"	L-36		3571+42.17	3580+50.00	907.83	876.83					22.80	8.64		0.031	0.041
"SD-5"	L-37		3580+50.00	3592+68.19	1,218.19	1,189.79					30.93	11.72		0.042	0.056
"SD-5"	L-37		3592+72.55	3594+00.00	127.45	97.45					2.53	0.96		0.003	0.005
"SD-5"	L-38		3594+00.00	3594+85.48	85.48	85.48					2.22	0.84		0.003	0.004
"SD-5"	L-38		3594+85.48	3595+35.76	50.28			50.28			0.66	0.25		0.001	0.001
"SD-5"	L-38		3595+35.76	3595+91.70	55.94				55.94		0.43	0.28		0.001	0.001
"SD-5"	L-38		3595+91.70	3600+76.38	484.68	449.68					11.69	4.43		0.016	0.021
"SD-5"	L-38		3600+76.38	3601+27.04	50.66			50.66			0.67	0.25		0.001	0.001
"SD-5"	L-38		3601+27.04	3601+76.73	49.69				49.69		0.38	0.25		0.001	0.001
"SD-5"	L-38		3601+76.73	3604+07.49	230.76	230.76					6.00	2.27		0.008	0.011
"SD-5"	L-38		3606+90.88	3607+50.00	59.12	59.12					1.54	0.58		0.002	0.003
"SD-5"	L-39		3607+50.00	3621+00.00	658.95	1,332.00					34.63	13.12		0.047	0.062
"SD-5"	L-40	↓	3621+00.00	3623+95.59	0.00	274.59					7.14	2.71		0.010	0.013
"SD-5"	L-40	SB	3629+11.27	3635+50.00	71.89	638.73					16.61	6.29		0.022	0.030
			SHEET Q-21	SUBTOTAL	18,359.42	14,564.20	-	4,607.18	303.90	3,342.62	637.67	221.60		0.794	1.053

SUMMARY OF QUANTITIES
Q-21

STATE OF CALIFORNIA - DEPARTMENT OF TRANSPORTATION
Caltrans®
DESIGN

FUNCTIONAL SUPERVISOR: EDWARD HAJJ
CALCULATED-DESIGNED BY: HECTOR GRACIA
CHECKED BY: ABDUL MALIKYAR
REVISED BY
DATE REVISED

LAST REVISION 08-19-13 | DATE PLOTTED => 31-OCT-2013 | TIME PLOTTED => 15:25

Dist	COUNTY	ROUTE	POST MILES TOTAL PROJECT	SHEET No.	TOTAL SHEETS
11	SD	5	R58.1/R72.4	220	259

07-12-13
REGISTERED CIVIL ENGINEER DATE

11-04-13
PLANS APPROVAL DATE

REGISTERED PROFESSIONAL ENGINEER ABDUL MALIKYAR No. C66169 Exp. 06-30-14 CIVIL STATE OF CALIFORNIA

THE STATE OF CALIFORNIA OR ITS OFFICERS OR AGENTS SHALL NOT BE RESPONSIBLE FOR THE ACCURACY OR COMPLETENESS OF SCANNED COPIES OF THIS PLAN SHEET.

HOT MIX ASPHALT DIKE

LINE	SHEET	DIRECTION	STATION FROM	STATION TO	REMOVE AC DIKE LF	PLACE HMA DIKE (TYPE E) LF	PLACE HMA DIKE (TYPE A) LF	PLACE HMA DIKE (TYPE F) LF	PLACE HMA DIKE (TYPE C) LF	PLACE HMA DIKE (TYPE D) LF	MINOR HOT MIX ASPHALT TON	HOT MIX ASPHALT (TYPE A) TON	RHMA (GAP GRADED) TON	TACK COAT TON	ASPHALTIC EMULSION (FOG SEAL COAT) TON
"SD-5"	L-41	SB	3635+50.00	3645+03.94	917.06	923.94					24.02	9.10		0.032	0.043
"SD-5"	L-41		3645+03.94	3647+60.32	256.38			256.38			3.38	1.27		0.005	0.006
"SD-5"	L-41		3647+60.32	3648+25.47	65.15				65.15		0.50	0.32		0.001	0.002
"SD-5"	L-41		3648+25.47	3649+50.00	124.53	124.53					3.24	1.23		0.004	0.006
"SD-5"	L-42		3649+50.00	3651+26.56	176.56	176.56					4.59	1.74		0.006	0.008
"SD-5"	L-42		3656+88.99	3663+00.00	611.01	611.01					15.89	6.02		0.021	0.029
"SD-5"	L-43		3663+00.00	3676+00.00	1,300.00	1,261.00					32.79	12.42		0.044	0.059
"SD-5"	L-44		3676+00.00	3682+57.76	657.76					634.76	37.20	10.20		0.036	0.048
"SD-5"	L-44		3682+57.76	3689+00.00	642.24	642.24					16.70	6.33		0.023	0.030
"SD-5"	L-45		3689+00.00	3692+20.75	320.75	320.75					8.34	3.16		0.011	0.015
"SD-5"	L-48		3727+87.07	3739+50.00	1,162.93	1,139.93					29.64	11.23		0.040	0.053
"SD-5"	L-49		3739+50.00	3744+33.26	319.60		455.26				12.29	3.09		0.011	0.015
"SD-5"	L-50		3762+57.32	3766+00.00	180.20	342.68					8.91	3.38		0.012	0.016
"SD-5"	L-51		3766+00.00	3778+05.49	1,205.49	1,170.49					30.43	11.53		0.041	0.055
	SAN		ONOFRE	BRIDGE	BRIDGE	BRIDGE	BRIDGE	BRIDGE	BRIDGE	BRIDGE	BRIDGE	BRIDGE			BRIDGE
"SD-5"	L-52		3781+92.03	3782+91.92	99.89			99.89			1.32	0.50		0.002	0.002
"SD-5"	L-52		3782+91.92	3783+64.26	72.34				72.34		0.55	0.36		0.001	0.002
"SD-5"	L-52		3783+64.26	3792+50.00	885.74	760.74					19.78	7.49		0.027	0.036
"SD-5"	L-52		3791+93.34	3792+50.00	56.66	56.66					1.47	0.56		0.002	0.003
"SD-5"	L-53		3792+50.00	3806+00.00	1,350.00	1,320.00					34.32	13.00		0.046	0.062
"SD-5"	L-54		3806+00.00	3807+36.07	136.07	136.07					3.54	1.34		0.005	0.006
"SD-5"	L-55		3821+85.33	3828+73.13	419.63			687.80			9.08	3.41		0.012	0.016
	SAN		MATEO	BRIDGE	BRIDGE	BRIDGE	BRIDGE	BRIDGE	BRIDGE	BRIDGE	BRIDGE	BRIDGE			BRIDGE
"SD-5"	L-56		3844+24.94	3845+50.00	125.06	125.06					3.38	0.85		0.003	0.004
"SD-5"	L-57		3845+50.00	3851+23.76	573.76	573.76					15.49	3.90		0.014	0.019
"OR-5"	L-57		32+02.83	32+50.09	47.26	47.26					1.28	0.32		0.001	0.002
(RAMPS)															
"LPR-4"	L-16		3309+38.62	3313+00.00	361.38	331.38					8.95		2.25	0.008	0.011
"LPR-4"	L-17		3313+00.00	3319+50.00	650.00	620.00					16.74		4.21	0.015	0.020
"VP"	L-22		3383+10.97	3383+67.43	56.46	56.46					1.47		0.56	0.002	0.003
"TSS"	L-36		3570+90.67	3574+97.92	407.25	407.25					10.59		4.01	0.014	0.019
"R3"	L-53	↓	3792+54.60	3799+82.70	728.10	728.10					18.93		7.17	0.026	0.034
"R4"	L-53	SB	3799+39.74	3800+18.30	78.56	78.56					2.04		0.77	0.003	0.004
			SHEET Q-22	SUBTOTAL	13,987.82	11,954.43	455.26	1,044.07	137.49	634.76	376.85	112.75	18.97	0.468	0.628

SUMMARY OF QUANTITIES
Q-22

STATE OF CALIFORNIA - DEPARTMENT OF TRANSPORTATION
Caltrans
DESIGN

FUNCTIONAL SUPERVISOR: EDWARD HAJJ
CALCULATED-DESIGNED BY: ABDUL MALIKYAR
CHECKED BY: HECTOR GRACIA
REVISED BY
DATE REVISED

LAST REVISION 08-19-13
DATE PLOTTED => 31-OCT-2013
TIME PLOTTED => 15:25

Dist	COUNTY	ROUTE	POST MILES TOTAL PROJECT	SHEET No.	TOTAL SHEETS
11	SD	5	R58.1/R72.4	221	259

07-12-13
REGISTERED CIVIL ENGINEER DATE

11-04-13
PLANS APPROVAL DATE

REGISTERED PROFESSIONAL ENGINEER ABDUL MALIKYAR No. C66169 Exp. 06-30-14 CIVIL STATE OF CALIFORNIA

THE STATE OF CALIFORNIA OR ITS OFFICERS OR AGENTS SHALL NOT BE RESPONSIBLE FOR THE ACCURACY OR COMPLETENESS OF SCANNED COPIES OF THIS PLAN SHEET.

HOT MIX ASPHALT DIKE

LINE	SHEET	DIRECTION	STATION FROM	LIMITS TO	REMOVE AC DIKE LF	PLACE HMA DIKE (TYPE E) LF	PLACE HMA DIKE (TYPE A) LF	PLACE HMA DIKE (TYPE F) LF	PLACE HMA DIKE (TYPE C) LF	PLACE HMA DIKE (TYPE D) LF	MINOR HOT MIX ASPHALT TON	HOT MIX ASPHALT (TYPE A) TON	RHMA (GAP GRADED) TON	TACK COAT TON	ASPHALTIC EMULSION (FOG SEAL COAT) TON
"SD-5"	L-3	NB	3132+41.52	3132+63.87	22.35	22.35					0.58	0.22		0.001	0.001
"SD-5"	L-3	|	3132+63.87	3138+50.00	586.13		568.13				15.34	3.86		0.014	0.018
"SD-5"	L-4		3138+50.00	3151+50.00	1,300.00		1,300.00				35.10	8.83		0.031	0.042
"SD-5"	L-5		3151+50.00	3156+91.23	541.23		541.23				14.61	3.68		0.013	0.017
"SD-5"	L-5		3156+94.10	3164+50.00	755.90	737.90					19.19	7.27		0.026	0.035
"SD-5"	L-6		3164+50.00	3166+42.52	192.52	192.52					5.01	1.90		0.007	0.009
"SD-5"	L-6		3166+42.52	3173+72.19	729.67		729.67				19.70	4.96		0.018	0.024
"SD-5"	L-6		3174+24.86	3177+50.00	325.14	325.14					8.45	3.20		0.011	0.015
"SD-5"	L-7		3177+50.00	3177+86.31	36.31	36.31					0.94	0.36		0.001	0.002
"SD-5"	L-7		3177+86.31	3178+36.63	50.32				50.32		0.38	0.25		0.001	0.001
"SD-5"	L-7		3178+36.63	3178+77.64	41.01			41.01			0.54	0.20		0.001	0.001
			ALISO	CREEK	BRIDGE	BRIDGE	BRIDGE	BRIDGE	BRIDGE	BRIDGE	BRIDGE	BRIDGE			BRIDGE
"SD-5"	L-7		3180+01.42	3188+87.56	886.14					850.14	49.82	13.67		0.049	0.065
"SD-5"	L-7		3188+87.56	3190+50.00	162.44	141.44					3.68	1.39		0.005	0.007
"SD-5"	L-8		3190+50.00	3204+00.00	1,350.00	1,350.00					35.10	13.30		0.047	0.063
"SD-5"	L-9		3204+00.00	3217+50.00	1,350.00	1,325.00					34.45	13.05		0.046	0.062
"SD-5"	L-10		3217+50.00	3231+50.00	1,202.49	1,317.00					34.24	12.97		0.046	0.062
"SD-5"	L-11		3231+50.00	3233+38.04	188.04	188.04					4.89	1.85		0.007	0.009
"SD-5"	L-12		3246+51.96	3258+50.00	1,198.04	1,198.04					31.15	11.80		0.042	0.056
"SD-5"	L-13		3258+50.00	3267+84.02	934.02	934.02					24.28	9.20		0.033	0.044
"SD-5"	L-13		3267+84.02	3268+48.89	64.87				64.87		0.49	0.32		0.001	0.002
"SD-5"	L-13		3268+48.89	3270+19.18	170.29			170.29			2.25	0.85		0.003	0.004
"SD-5"	L-13		3270+19.18	3272+50.00	230.82	205.82					5.35	2.03		0.007	0.010
"SD-5"	L-14		3272+50.00	3273+51.96	101.96	101.96					2.65	1.00		0.004	0.005
"SD-5"	L-14		3273+51.96	3274+13.89	61.93				61.93		0.47	0.31		0.001	0.002
"SD-5"	L-14		3274+13.89	3274+42.32	28.43			28.43			0.38	0.14		0.001	0.001
	LAS		FLORES	CREEK	BRIDGE	BRIDGE	BRIDGE	BRIDGE	BRIDGE	BRIDGE	BRIDGE	BRIDGE			BRIDGE
"SD-5"	L-14		3276+70.13	3281+53.13	483.00					453.00	26.55	7.28		0.026	0.035
"SD-5"	L-16		3302+91.38	3307+76.17	484.79	484.79					12.60	4.78		0.017	0.023
"SD-5"	L-16		3307+76.17	3308+25.12	48.95				48.95		0.37	0.24		0.001	0.001
"SD-5"	L-16		3308+25.12	3308+62.50	37.38			37.38			0.49	0.19		0.001	0.001
LAS	PULGAS		ROAD	OVERCROSSING	BRIDGE	BRIDGE	BRIDGE	BRIDGE	BRIDGE	BRIDGE	BRIDGE	BRIDGE			BRIDGE
"SD-5"	L-17		3310+14.21	3313+00.00	285.79	262.79					6.83	2.59		0.009	0.012
"SD-5"	L-17		3313+00.00	3319+97.78	697.78	697.78					18.14	6.87		0.025	0.033
"SD-5"	L-17		3320+52.01	3321+99.38	147.37	117.37					3.05	1.16		0.004	0.006
"SD-5"	L-18		3334+08.81	3334+93.72	84.91				84.91		0.65	0.42		0.002	0.002
"SD-5"	L-18		3334+93.72	3336+43.73	150.01			150.01			1.98	0.74		0.003	0.004
"SD-5"	L-18		3336+43.73	3340+50.00	406.27	388.27					10.10	3.83		0.014	0.018
"SD-5"	L-19		3340+50.00	3343+39.46	289.46	268.46					6.98	2.64		0.009	0.013
"SD-5"	L-19		3343+39.46	3354+50.00	1,110.54					1,071.54	62.79	17.22		0.061	0.082
"SD-5"	L-20		3354+50.00	3368+50.00	1,400.00					1,379.00	80.81	22.17		0.079	0.105
"SD-5"	L-21		3368+50.00	3382+00.00	769.20	1,269.00					32.99	12.50		0.045	0.059
"SD-5"	L-22		3382+00.00	3383+41.84	141.84	141.84					3.69	1.40		0.005	0.007
"SD-5"	L-22		3383+41.84	3384+29.80	87.96				87.96		0.67	0.44		0.002	0.002
"SD-5"	L-22		3384+29.80	3395+50.00	1,120.20			1,120.20			14.79	5.56		0.020	0.026
"SD-5"	L-23		3395+50.00	3396+80.10	130.10			130.10			1.72	0.65		0.002	0.003
			AGRA	OVERHEAD	BRIDGE	BRIDGE	BRIDGE	BRIDGE	BRIDGE	BRIDGE	BRIDGE	BRIDGE			BRIDGE
"SD-5"	L-23	↓	3399+58.26	3403+39.33	381.07			381.07			5.03	1.89		0.007	0.009
"SD-5"	L-25	NB	3423+90.04	3427+12.61	322.57			322.57			4.26	1.60		0.006	0.008
			SHEET Q-23 SUBTOTAL		21,089.24	11,705.84	3,139.03	2,381.06	398.94	3,753.68	643.53	210.78		0.754	1.006

SUMMARY OF QUANTITIES
Q-23

REVISED BY | DATE REVISED
HECTOR GRACIA | ABDUL MALIKYAR
CALCULATED-DESIGNED BY | CHECKED BY
FUNCTIONAL SUPERVISOR: EDWARD HAJJ
STATE OF CALIFORNIA - DEPARTMENT OF TRANSPORTATION
Caltrans®
DESIGN

LAST REVISION 08-19-13 | DATE PLOTTED => 31-OCT-2013 | TIME PLOTTED => 15:25

Dist	COUNTY	ROUTE	POST MILES TOTAL PROJECT	SHEET No.	TOTAL SHEETS
11	SD	5	R58.1/R72.4	222	259

07-12-13
REGISTERED CIVIL ENGINEER DATE

11-04-13
PLANS APPROVAL DATE

REGISTERED PROFESSIONAL ENGINEER ABDUL MALIKYAR No. C66169 Exp. 06-30-14 CIVIL STATE OF CALIFORNIA

THE STATE OF CALIFORNIA OR ITS OFFICERS OR AGENTS SHALL NOT BE RESPONSIBLE FOR THE ACCURACY OR COMPLETENESS OF SCANNED COPIES OF THIS PLAN SHEET.

HOT MIX ASPHALT DIKE

LINE	SHEET	DIRECTION	STATION FROM	LIMITS TO	REMOVE AC DIKE LF	PLACE HMA DIKE (TYPE E) LF	PLACE HMA DIKE (TYPE A) LF	PLACE HMA DIKE (TYPE F) LF	PLACE HMA DIKE (TYPE C) LF	PLACE HMA DIKE (TYPE D) LF	MINOR HOT MIX ASPHALT TON	HOT MIX ASPHALT (TYPE A) TON	RHMA (GAP GRADED) TON	TACK COAT TON	ASPHALTIC EMULSION (FOG SEAL COAT) TON
"SD-5"	L-25	NB	3427+12.61	3435+00.00	395.62	787.39					20.47	7.76		0.028	0.037
"SD-5"	L-26		3435+00.00	3448+50.00	1,060.36	1329.00					34.55	13.09		0.047	0.062
"SD-5"	L-27		3448+50.00	3453+82.04	532.04	532.04					13.83	5.24		0.019	0.025
"SD-5"	L-29		3482+92.99	3488+50.00	552.45					532.01	31.18	8.55		0.030	0.041
"SD-5"	L-30		3488+50.00	3490+65.11	0.00					215.11	12.61	3.46		0.012	0.016
"SD-5"	L-30		3490+65.11	3501+50.00	388.46	966.89					25.14	9.53		0.034	0.045
"SD-5"	L-31		3501+50.00	3509+54.82	291.23	783.82					20.38	7.72		0.028	0.037
"SD-5"	L-31		3509+54.82	3514+00.00	445.18					427.18	25.03	6.87		0.024	0.033
"SD-5"	L-32		3514+00.00	3518+45.30	445.30					445.30	26.09	7.16		0.026	0.034
"SD-5"	L-32		3518+45.30	3527+00.00	854.70		791.70				21.38	5.38		0.019	0.026
"SD-5"	L-33		3527+00.00	3536+46.21	946.21		911.21				24.60	6.19		0.022	0.029
"SD-5"	L-33		3536+46.21	3536+95.58	49.37				49.37		0.38	0.25		0.001	0.001
"SD-5"	L-33		3536+95.58	3538+05.85	110.27			110.27			1.46	0.55		0.002	0.003
"SD-5"	L-33		3538+05.85	3540+50.00	197.10	244.15					6.35	2.41		0.009	0.011
"SD-5"	L-34		3540+50.00	3545+48.42	93.66	430.42					11.19	4.24		0.015	0.020
"SD-5"	L-39		3610+97.88	3621+00.00	1,002.12	967.12					25.15	9.53		0.034	0.045
"SD-5"	L-40		3621+00.00	3635+50.00	975.87	1450.00					37.70	14.29		0.051	0.068
"SD-5"	L-41		3635+50.00	3642+75.27	725.27	725.27					18.86	7.15		0.025	0.034
"SD-5"	L-41		3642+75.27	3643+56.14	80.87				80.87		0.61	0.40		0.001	0.002
"SD-5"	L-41		3643+56.14	3644+27.01	70.87			70.87			0.94	0.35		0.001	0.002
"SD-5"	L-41		3644+27.01	3649+50.00	522.99					522.99	30.65	8.41		0.030	0.040
"SD-5"	L-42		3649+50.00	3663+00.00	1,350.00					1,315.00	77.06	21.14		0.075	0.100
"SD-5"	L-43		3663+00.00	3668+01.09	501.09					501.09	29.36	8.05		0.029	0.038
"SD-5"	L-45		3693+31.66	3698+55.11	523.45	483.45					12.57	4.76		0.017	0.023
"SD-5"	L-48		3734+53.71	3735+12.28	58.57				-		-	-		-	-
"SD-5"	L-48		3735+12.28	3735+53.62	41.34			-			-	-		-	-
"SD-5"	L-49		3747+95.66	3748+96.20	100.54	100.54					2.61	0.99		0.004	0.005
"SD-5"	L-50		3753+77.63	3761+52.02	774.39	774.39					20.13	7.63		0.027	0.036
"SD-5"	L-50		3761+52.02	3762+13.27	61.25				61.25		0.47	0.30		0.001	0.001
"SD-5"	L-50		3762+13.27	3762+49.50	36.23			36.23			0.48	0.18		0.001	0.001
"SD-5"	L-50		3762+49.50	3766+00.00	350.50					350.50	20.54	5.63		0.020	0.027
"SD-5"	L-51		3766+00.00	3773+46.19	746.19					746.19	43.73	11.99		0.043	0.057
"SD-5"	L-51		3773+46.19	3776+86.02	327.33	304.33					7.91	3.00		0.011	0.014
"SD-5"	L-51		3776+86.02	3777+48.52	62.50				62.50		0.48	0.31		0.001	0.002
"SD-5"	L-51		3777+48.52	3777+74.00	37.98			37.98			0.50	0.19		0.001	0.001
	SAN		ONOFRE	BRIDGE	BRIDGE	BRIDGE	BRIDGE	BRIDGE	BRIDGE	BRIDGE	BRIDGE	BRIDGE			BRIDGE
"SD-5"	L-52		3781+60.15	3791+51.47	692.75	909.32					23.64	8.96		0.032	0.043
"SD-5"	L-52		3792+03.14	3792+50.00	46.86	46.86					1.22	0.46		0.002	0.002
"SD-5"	L-53	↓	3792+50.00	3806+00.00	1,350.00	1,322.00					34.37	13.02		0.046	0.062
"SD-5"	L-54	NB	3806+00.00	3807+82.50	182.50	182.50					4.75	1.80		0.006	0.009
			SHEET Q-24 SUBTOTAL		16,983.41	12,339.49	1,702.91	255.35	253.99	5,055.37	668.37	216.94		0.774	1.032

SUMMARY OF QUANTITIES
Q-24

STATE OF CALIFORNIA - DEPARTMENT OF TRANSPORTATION
Caltrans® DESIGN

FUNCTIONAL SUPERVISOR: EDWARD HAJJ
CALCULATED-DESIGNED BY: HECTOR GRACIA
CHECKED BY: ABDUL MALIKYAR
REVISED BY
DATE REVISED

LAST REVISION 08-19-13
DATE PLOTTED => 31-OCT-2013
TIME PLOTTED => 15:25

Dist	COUNTY	ROUTE	POST MILES TOTAL PROJECT	SHEET No.	TOTAL SHEETS
11	SD	5	R58.1/R72.4	223	259

07-12-13
REGISTERED CIVIL ENGINEER DATE

11-04-13
PLANS APPROVAL DATE

REGISTERED PROFESSIONAL ENGINEER ABDUL MALIKYAR No. C66169 Exp. 06-30-14 CIVIL STATE OF CALIFORNIA

THE STATE OF CALIFORNIA OR ITS OFFICERS OR AGENTS SHALL NOT BE RESPONSIBLE FOR THE ACCURACY OR COMPLETENESS OF SCANNED COPIES OF THIS PLAN SHEET.

HOT MIX ASPHALT DIKE

LINE	SHEET	DIRECTION	STATION FROM	LIMITS TO	REMOVE AC DIKE LF	PLACE HMA DIKE (TYPE E) LF	PLACE HMA DIKE (TYPE A) LF	PLACE HMA DIKE (TYPE F) LF	PLACE HMA DIKE (TYPE C) LF	PLACE HMA DIKE (TYPE D) LF	MINOR HOT MIX ASPHALT TON	HOT MIX ASPHALT (TYPE A) TON	RHMA (GAP GRADED) TON	TACK COAT TON	ASPHALTIC EMULSION (FOG SEAL COAT) TON
"SD-5"	L-54	NB	3808+30.50	3808+94.80	64.30	64.30					1.67	0.63		0.002	0.003
"SD-5"	L-54		3808+94.80	3809+56.47	61.67				61.67		0.47	0.31		0.001	0.002
"SD-5"	L-54		3809+56.47	3819+50.00	993.53			993.53			13.11	4.93		0.018	0.023
"SD-5"	L-55		3819+50.00	3829+74.98	1,024.98			1,024.98			13.53	5.09		0.018	0.024
	SAN		MATEO	BRIDGE	BRIDGE	BRIDGE	BRIDGE	BRIDGE	BRIDGE	BRIDGE	BRIDGE	BRIDGE			BRIDGE
"SD-5"	L-56		3835+11.01	3836+35.94	124.93			124.93			1.65	0.62		0.002	0.003
"SD-5"	L-56		3836+35.94	3840+60.29	424.35					424.35	24.87	6.82		0.024	0.032
"SD-5"	L-56		3844+85.01	3845+50.00	64.99		64.99				1.75	0.44		0.002	0.002
"SD-5"	L-57		3845+50.00	3851+20.10	570.10		570.10				15.39	3.87		0.014	0.018
"OR-5"	L-57		32+02.83	32+80.83	78.00		78.00				2.11	0.53		0.002	0.003
(RAMPS)															
"LPR-1"	L-17		3309+97.92	3312+86.60	288.68	270.68					7.04		2.67	0.010	0.013
"LPR-1"	L-18		3312+86.60	3320+50.08	763.48	763.48					19.85		7.52	0.027	0.036
"R2"	L-52		3791+54.07	3792+54.18	100.11	100.11					2.60		0.99	0.004	0.005
"R2"	L-53		3792+54.18	3799+73.35	719.17	683.17					17.76		6.73	0.024	0.032
"R1"	L-53		3800+31.34	3806+07.68	576.34	576.34					14.98		5.68	0.020	0.027
"R1"	L-54		3806+07.68	3808+38.35	230.67	230.67					6.00		2.27	0.008	0.011
"AR1"	L-56		3840+63.10	3845+57.87	494.77	494.77					12.86		4.87	0.017	0.023
"AR1"	L-56	NB	3845+57.87	3846+75.36	117.49	117.49					3.05		1.16	0.004	0.006
SHEET Q-25 SUBTOTAL					6,697.56	3,301.01	713.09	2,143.44	61.67	424.35	158.69	23.24	31.89	0.197	0.263
SHEET Q-24 SUBTOTAL					16,983.41	12,339.49	1,702.91	255.35	253.99	5,055.37	668.37	216.94		0.774	1.032
SHEET Q-23 SUBTOTAL					21,089.24	11,705.84	3,139.03	2,381.06	398.94	3,753.68	643.53	210.78		0.754	1.006
SHEET Q-20 SUBTOTAL					17,443.43	11,989.65	5,482.32	1,629.82	320.32	2,056.92	604.26	198.11		0.707	0.943
SHEET Q-21 SUBTOTAL					18,359.42	14,564.20	-	4,607.18	303.90	3,342.62	637.67	221.60		0.794	1.053
SHEET Q-22 SUBTOTAL					13,987.82	11,954.43	455.26	1,044.07	137.49	634.76	376.85	112.75	18.97	0.468	0.628
TOTAL					94,560.88	65,854.62	11,492.61	12,060.92	1,476.31	15,267.70	3,089.37**	983.42*	50.86*	3.694*	4.925***

* - SEE ROADWAY QUANTITIES TABLE FOR ADDITIONAL QUANTITES

** - FOR ADDITIONAL QUANTITIES, SEE HMA Misc AREA TABLE AND CONCRETE BARRIER TABLE.

*** - FOR ADDITIONAL QUANTITIES, SEE ROADWAY QUANTITIES TABLE AND HMA Misc AREA TABLE.

SUMMARY OF QUANTITIES
Q-25

STATE OF CALIFORNIA - DEPARTMENT OF TRANSPORTATION
DESIGN
Caltrans

FUNCTIONAL SUPERVISOR: EDWARD HAJJ
CALCULATED-DESIGNED BY: HECTOR GRACIA
CHECKED BY: ABDUL MALIKYAR
REVISED BY
DATE REVISED

LAST REVISION 08-19-13
DATE PLOTTED => 31-OCT-2013
TIME PLOTTED => 15:25

Dist	COUNTY	ROUTE	POST MILES TOTAL PROJECT	SHEET No.	TOTAL SHEETS
11	SD	5	R58.1/R72.4	224	259

REGISTERED CIVIL ENGINEER 07-12-13 DATE

11-04-13
PLANS APPROVAL DATE

REGISTERED PROFESSIONAL ENGINEER ABDUL MALIKYAR No. C66169 Exp. 06-30-14 CIVIL STATE OF CALIFORNIA

THE STATE OF CALIFORNIA OR ITS OFFICERS OR AGENTS SHALL NOT BE RESPONSIBLE FOR THE ACCURACY OR COMPLETENESS OF SCANNED COPIES OF THIS PLAN SHEET.

TEMPORARY WATER POLLUTION CONTROL QUANTITES

SHEET NUMBER	TEMPORARY FIBER ROLL	TEMPORARY DRAINAGE INLET PROTECTION		TEMPORARY FENCE (TYPE ESA)
		(TYPE 3A)	(TYPE 3B)	
	(LF)	(EA)	(EA)	(LF)
L-1	100			
L-2	40			
L-3	60			
L-4	20	1		
L-5	110	2		
L-6	80	2		
L-7	70	5	1	
L-8	20	1	1	
L-9	70			
L-10	120			
L-11	30			
L-12	40	2		
L-13	70			
L-14	80			
L-15	70	2		
L-16	90			
L-17	60			
L-18	275	1		225
L-19	90	2		
L-20	70	1		
L-21	70	1		
L-22	555			525
L-23	148			108
L-24	870	1		874
L-25	945	2		949
L-26	60	1		
L-29	55			
L-30	200			
L-31	40	5		
L-32	70			
L-33	60			
L-34	140	2		
L-35	75			
L-36	30	7		800
L-37	30			
L-38	40			
L-39	60			
L-40	90			
L-41	30			
L-42	60			
L-43	40	2		
L-44	20			
L-45	60			
L-48	20			
L-49	30			
L-50		2		
L-51	70			
L-52	260			
L-53	307			
L-54	532	3		540
L-55		2		1,086
L-56	182	6	1	
L-57	217	7		
SUBTOTAL	6,931	63		4,307
SHEET Q-16 SUBTOTAL	14,034			
TOTAL	20,965	63		5,107

CLEARING AND GRUBBING

SHEET NUMBER	AREA (N)	HEIGHT (N)	VOLUME (N)	REMARK
	SQFT	LF	CY	CLEAR AND GRUB THE AREA ABOVE ORIGINAL GROUND OF OBJECTIONABLE MATERIAL INCLUDING CONCRETE.
L-36	18,095	4	2,681	

(N) NOT A SEPARATE PAY ITEM, FOR INFORMATION ONLY.

SUMMARY OF QUANTITIES

Q-26

REVISED BY | DATE REVISED
ABDUL MALIKYAR | HECTOR GRACIA
CALCULATED-DESIGNED BY | CHECKED BY
FUNCTIONAL SUPERVISOR: EDWARD HAJJ
STATE OF CALIFORNIA - DEPARTMENT OF TRANSPORTATION
Caltrans DESIGN

LAST REVISION 10-23-13 | DATE PLOTTED => 31-OCT-2013 | TIME PLOTTED => 15:58

Dist	COUNTY	ROUTE	POST MILES TOTAL PROJECT	SHEET No.	TOTAL SHEETS
11	SD	5	R58.1/R72.4	225	259

07-12-13
REGISTERED CIVIL ENGINEER DATE

11-04-13
PLANS APPROVAL DATE

REGISTERED PROFESSIONAL ENGINEER ABDUL MALIKYAR No. C66169 Exp. 06-30-14 CIVIL STATE OF CALIFORNIA

THE STATE OF CALIFORNIA OR ITS OFFICERS OR AGENTS SHALL NOT BE RESPONSIBLE FOR THE ACCURACY OR COMPLETENESS OF SCANNED COPIES OF THIS PLAN SHEET.

METAL BEAM GUARD RAILING (STEEL POST)

LINE	SHEET	STATION LIMITS		LOCATION		LAYOUT TYPE (N)	REMOVE MBGR		TREATED WOOD WASTE	ALTERNATIVE IN-LINE TERMINAL SYSTEM	ALTERNATIVE FLARED TERMINAL SYSTEM	METAL BEAM GUARD RAILING (STEEL POST)	TRANSITION RAILING (TYPE WB)	BURIED POST END ANCHOR (N)	END ANCHOR ASSEMBLY (TYPE SFT)	END CAP (TYPE TC) (N)	END CAP (TYPE A) (N)	GUARD RAILING DELINEATOR
		FROM	TO	NORTH-BOUND	SOUTH-BOUND		NB	SB										
							LF		LB	EA	EA	LF	EA	EA	EA	EA	EA	EA
"SD-5"	L-5	3156+76.30	3161+76.16		Lt-Shld	16C		500	5,529			500		1	1			120
"SD-5"	L-7	3178+15.52	3178+77.64	Rt-Shld		12B	62.5		751		1	25	1			1		3
"SD-5"	L-7	3180+48.24	3181+11.26		Lt-Shld	12B		62.5	751		1	25	1			1		3
"SD-5"	L-10	3219+40.43	3225+08.63		Lt-Shld	16B		568.42	6,276		1	550			1			127
"SD-5"	L-13	3268+09.02	3270+19.18	Rt-Shld		16B	210		2,362		1	175			1			41
"SD-5"	L-13	3269+72.81	3272+50.00		Lt-Shld	12DD		277.19	3,096			300			1			67
"SD-5"	L-14	3272+50.00	3274+82.12		Lt-Shld	12DD		232.12	2,603			250					1	56
"SD-5"	L-14	3273+76.96	3274+42.32	Rt-Shld		12B	62.5		751		1	25	1			1		3
"SD-5"	L-14	3277+12.86	3277+75.08		Lt-Shld	12B		62.5	751		1	25	1			1		6
"SD-5"	L-16	3300+17.01	3300+95.58	Rt-Shld		16B	79		931		1	50			1			10
"SD-5"	L-16	3308+01.17	3308+62.50	Rt-Shld		12B	62.5		751		1	25	1			1		3
"SD-5"	L-16	3310+12.15	3310+84.44		Lt-Shld	12B		62.5	751		1	25	1			1		3
"SD-5"	L-17	3320+20.78	3321+20.43		Lt-Shld	16B		99.65	1,157		1	75			1			15
"SD-5"	L-18	3334+33.81	3336+43.73	Rt-Shld		16B	209.92		2,361		1	175			1			41
"SD-5"	L-18	3336+39.14	3339+65.42		Lt-Shld	16B		326.38	3,633		1	300			1			69
"SD-5"	L-21	3373+29.23	3374+04.05		Lt-Shld	16B		75	887		1	50			1			9
"SD-5"	L-22	3383+67.68	3395+50.00	Rt-Shld		12B	1,185		13,010	1		1,150						275
"SD-5"	L-22	3389+70.73	3395+50.00		Lt-Shld	12DD		577	6,374			600			1			139
"SD-5"	L-23	3395+50.00	3396+80.10	Rt-Shld		12B	133		1,525			125	1			1		29
"SD-5"	L-23	3395+50.00	3399+60.86		Lt-Shld	12DD		413	4,576			425					1	99
"SD-5"	L-23	3399+58.26	3408+50.00	Rt-Shld		12DD	905		9,947			900	1			1		214
"SD-5"	L-23	3402+38.51	3408+50.00		Lt-Shld	12B		595	6,569			600	1			1		140
"SD-5"	L-24	3408+50.00	3421+50.00	Rt-Shld		12DD	1,300		14,266			1,300						312
"SD-5"	L-24	3408+50.00	3421+50.00		Lt-Shld	12B		1,300	14,266			1,300						312
"SD-5"	L-25	3421+50.00	3427+12.61	Rt-Shld		12DD	563		6,213			575			1			135
"SD-5"	L-25	3421+50.00	3435+00.00		Lt-Shld	12B		1,350	14,812			1,350						324
"SD-5"	L-26	3435+00.00	3438+49.95		Lt-Shld	12B		360	4,000		1	325						77
"SD-5"	L-27	3450+97.50	3452+57.50	Rt-Shld		16B	160		1,816		1	125			1			29
						SUB TOTAL	11,793		130,715	1	15	11,350	9	1	12	9	2	2,661

(N) - NOT A SEPARATE PAY ITEM, FOR INFORMATION ONLY

SUMMARY OF QUANTITIES

Q-27

REVISED BY | DATE REVISED
ABDUL MALIKYAR | RYAN MUNZ
CALCULATED-DESIGNED BY | CHECKED BY
FUNCTIONAL SUPERVISOR | EDWARD HAJJ
STATE OF CALIFORNIA - DEPARTMENT OF TRANSPORTATION
Caltrans® DESIGN

LAST REVISION 08-19-13 | DATE PLOTTED => 31-OCT-2013 | TIME PLOTTED => 15:25

Dist	COUNTY	ROUTE	POST MILES TOTAL PROJECT	SHEET No.	TOTAL SHEETS
11	SD	5	R58.1/R72.4	226	259

07-12-13
REGISTERED CIVIL ENGINEER DATE

11-04-13
PLANS APPROVAL DATE

REGISTERED PROFESSIONAL ENGINEER ABDUL MALIKYAR No. C66169 Exp. 06-30-14 CIVIL STATE OF CALIFORNIA

THE STATE OF CALIFORNIA OR ITS OFFICERS OR AGENTS SHALL NOT BE RESPONSIBLE FOR THE ACCURACY OR COMPLETENESS OF SCANNED COPIES OF THIS PLAN SHEET.

METAL BEAM GUARD RAILING (STEEL POST)

LINE	SHEET	STATION LIMITS FROM	STATION LIMITS TO	LOCATION NORTH-BOUND	LOCATION SOUTH-BOUND	LAYOUT TYPE (N)	REMOVE MBGR NB	REMOVE MBGR SB	TREATED WOOD WASTE	ALTERNATIVE IN-LINE TERMINAL SYSTEM	ALTERNATIVE FLARED TERMINAL SYSTEM	METAL BEAM GUARD RAILING (STEEL POST)	TRANSITION RAILING (TYPE WB)	BURIED POST END ANCHOR (N)	END ANCHOR ASSEMBLY (TYPE SFT)	END CAP (TYPE TC) (N)	END CAP (TYPE A) (N)	GUARD RAILING DELINEATOR
							LF		LB	EA	EA	LF	EA	EA	EA	EA	EA	EA
"SD-5"	L-33	3536+71.21	3538+05.85	Rt-Shld		16B	136		1,554		1	100			1			24
"SD-5"	L-35	3565+18.35	3567+00.00	Rt-Shld		16B	180		2,034		1	150						34
"SD-5"	L-36	3567+00.00	3571+69.45	Rt-Shld		16B	472		5,219			475			1			113
"SD-5"	L-36	3574+69.49	3575+35.51	Rt-Shld		16B	66		790		1	50			1			7
"SD-5"	L-36	3576+39.73	3580+50.00		Lt-Shld	16B		408	4,524			425			1			98
"SD-5"	L-36	3578+40.45	3580+55.00	Rt-Shld		16B	213		2,392		1	175	1					39
"SD-5"	L-37	3580+50.00	3585+79.71		Lt-Shld	16B		532	5,874		1	500						119
"SD-5"	L-37	3591+38.47	3591+64.06		Lt-Shld	16B					1	25			1			6
"SD-5"	L-37	3591+39.79	3592+01.67		Lt-Shld	15A		62.5	751									
"SD-5"	L-37	3591+39.79	3592+01.67		Lt-Shld	15A		62.5	751									
"SD-5"	L-38	3594+85.48	3595+66.71		Lt-Shld	16B		81.5	958		1	50			1			11
"SD-5"	L-38	3600+76.38	3601+51.73		Lt-Shld	16B		75.9	897		1	50			1			9
"SD-5"	L-41	3643+00.27	3644+27.01	Rt-Shld		16B	127		1,455		1	100			1			21
"SD-5"	L-41	3645+03.94	3648+00.47		Lt-Shld	16B		76	898		1	275			1			62
"SD-5"	L-48	3734+78.71	3735+53.62	Rt-Shld		16B	77		906		1	50			1			10
"SD-5"	L-50	3761+77.02	3762+49.50	Rt-Shld		16B	74.1		878		1	50			1			9
"SD-5"	L-51	3777+10.89	3777+74.00	Rt-Shld		12B	62.5		751		1	25	1			1		3
"SD-5"	L-52	3781+92.03	3783+45.90		Lt-Shld	12B		150	1,706		1	100	1			1		24
"SD-5"	L-54	3809+18.82	3819+50.00	Rt-Shld		12B	1,007		11,069		1	975						233
"SD-5"	L-54	3808+83.28	3809+56.65		Lt-Shld	16B		79	932		1	50			1			10
"SD-5"	L-54	3812+45.46	3819+50.00		Lt-Shld	12DD		719	7,915			725			1			172
"SD-5"	L-55	3819+50.00	3829+74.98	Rt-Shld		12B	1,021		11,223			1,025	1			1		242
"SD-5"	L-55	3819+50.00	3828+73.13		Lt-Shld	12DD		931	10,238			950					1	223
"SD-5"	L-56	3835+11.01	3836+35.94	Rt-Shld		12DD	125		1,432			125			1		1	30
						SUBTOTAL	6,738		75,147	-	16	6,450	4	-	14	3	2	1,499
						SUBTOTAL FROM Q-27	11,793		130,715	1	15	11,350	9	1	12	9	2	2,661
						TOTAL	18,531		205,862*	1	31	17,800	13	1	26	12	4	4,160

(N) - NOT A SEPARATE PAY ITEM, FOR INFORMATION ONLY

* FOR ADDITIONAL TREATED WOOD WASTE QUANTITIES SEE THRIE BEAM BARRIER TABLE SHEET Q-29

SUMMARY OF QUANTITIES
Q-28

REVISED BY | DATE REVISED
ABDUL MALIKYAR | RYAN MUNZ
CALCULATED-DESIGNED BY | CHECKED BY
FUNCTIONAL SUPERVISOR: EDWARD HAJJ
STATE OF CALIFORNIA - DEPARTMENT OF TRANSPORTATION
Caltrans DESIGN

LAST REVISION 08-19-13 | DATE PLOTTED => 31-OCT-2013 | TIME PLOTTED => 15:25

Dist	COUNTY	ROUTE	POST MILES TOTAL PROJECT	SHEET No.	TOTAL SHEETS
11	SD	5	R58.1/R72.4	227	259

07-12-13
REGISTERED CIVIL ENGINEER DATE

11-04-13
PLANS APPROVAL DATE

REGISTERED PROFESSIONAL ENGINEER
ABDUL MALIKYAR
No. C66169
Exp. 06-30-14
CIVIL
STATE OF CALIFORNIA

THE STATE OF CALIFORNIA OR ITS OFFICERS OR AGENTS SHALL NOT BE RESPONSIBLE FOR THE ACCURACY OR COMPLETENESS OF SCANNED COPIES OF THIS PLAN SHEET.

THRIE BEAM BARRIER (STEEL POST)

LINE	SHEET	STATION LIMITS FROM	STATION LIMITS TO	LOCATION	REMOVE SINGLE METAL BEAM BARRIER	REMOVE DOUBLE METAL BEAM BARRIER	TRANSITION RAILING (TYPE STB)	TRANSITION RAILING (TYPE DTB)	END CAP (TYPE TC) (N)	DOUBLE THRIE BEAM BARRIER (STEEL POST)	SINGLE THRIE BEAM BARRIER (STEEL POST)	TREATED WOOD WASTE
					LF	LF	EA	EA	EA	LF	LF	LB
"SD-5"	L-7	3178+45.3	3178+95.3	MEDIAN	50		1		1		12.50	614
"SD-5"	L-7	3180+33.4	3180+83.1	MEDIAN		50		1	1		12.50	614
"SD-5"	L-14	3274+05.0	3274+54.6	MEDIAN		50		1	1	12.50		614
"SD-5"	L-14	3276+97.3	3277+83.1	MEDIAN		50		1	1	12.50		614
"SD-5"	L-16	3308+12.8	3308+66.1	MEDIAN		50		1	1	12.50		614
"SD-5"	L-16	3310+15.8	3310+65.8	MEDIAN	50		1		1		12.50	614
"SD-5"	L-23	3397+42.7	3397+92.6	MEDIAN	50		1		1		12.50	614
"SD-5"	L-51	3777+35.9	3777+85.8	MEDIAN	50		1		1		12.50	614
"SD-5"	L-52	3781+80.1	3782+30.1	MEDIAN	50		1		1		12.50	614
"SD-5"	L-55	3828+83.0	3829+32.9	MEDIAN		50		1	1	12.50		614
"SD-5"	L-56	3834+61.8	3835+11.7	MEDIAN		50		1	1	12.50		614
"SD-5"	L-57	3845+48.1	3845+73.1	MEDIAN		25		1	1			341
				TOTAL	250	325	5	7	12	62.50	75.00	7,095*

(N) - NOT A SEPARATE PAY ITEM, FOR INFORMATION ONLY

* FOR ADDITIONAL QUANTITIES, SEE METAL BEAM GUARD RAILING TABLE Q-28

SUMMARY OF QUANTITIES
Q-29

STATE OF CALIFORNIA - DEPARTMENT OF TRANSPORTATION
Caltrans
DESIGN

FUNCTIONAL SUPERVISOR: EDWARD HAJJ
CALCULATED-DESIGNED BY: ABDUL MALIKYAR
CHECKED BY: RYAN MUNZ
REVISED BY
DATE REVISED

LAST REVISION 08-19-13
DATE PLOTTED => 31-OCT-2013
TIME PLOTTED => 15:25

Dist	COUNTY	ROUTE	POST MILES TOTAL PROJECT	SHEET No.	TOTAL SHEETS
11	SD	5	R58.1/R72.4	228	259

REGISTERED CIVIL ENGINEER 07-12-13 DATE

11-04-13
PLANS APPROVAL DATE

REGISTERED PROFESSIONAL ENGINEER ABDUL MALIKYAR No. C66169 Exp. 06-30-14 CIVIL STATE OF CALIFORNIA

THE STATE OF CALIFORNIA OR ITS OFFICERS OR AGENTS SHALL NOT BE RESPONSIBLE FOR THE ACCURACY OR COMPLETENESS OF SCANNED COPIES OF THIS PLAN SHEET.

LEGEND:

EROSION CONTROL (BONDED FIBER MATRIX)

EROSION CONTROL TYPE 1

SEQUENCE	ITEM	MATERIAL DESCRIPTION	MATERIAL TYPE	APPLICATION RATE	REMARKS
STEP 1	EROSION CONTROL (BONDED FIBER MATRIX)	FIBER		2500 LB/ACRE FOR SLOPES ≤ 4:1 (Horiz:Vert) 3000 LB/ACRE FOR SLOPES > 4:1 AND ≤ 3:1 (Horiz:Vert) 3500 LB/ACRE FOR SLOPES > 3:1 AND ≤ 2:1 (Horiz:Vert) 4000 LB/ACRE FOR SLOPES > 2:1 AND ≤ 1:1 (Horiz:Vert) 4500 LB/ACRE FOR SLOPES > 1:1 (Horiz:Vert)	APPLICATION RATE IS FOR FIBER AND TACKIFIER COMBINED
		TACKIFIER			
STEP 2	EROSION CONTROL (BONDED FIBER MATRIX)	FIBER		500 LB/ACRE	
		TACKIFIER			
		SEED	MIX	30 LB/ACRE	

SEED

BOTANICAL NAME (COMMON NAME)	PERCENT GERMINATION (MINIMUM)	POUNDS PURE LIVE SEED PER ACRE (SLOPE MEASUREMENT)(N)
ARTEMISIA CALIFORNICA[1] (COASTAL SAGEBRUSH)	50	1.5
BACCHARIS PILULARIS SSP.[1] PILULARIS (COYOTE BUSH)	20	3.0
ERIOGONUM FASCICULATUM[1] (CALIFORNIA BUCKWHEAT)	20	3.0
ESCHSCHOLZIA CALIFORNICA[1] (CALIFORNIA POPPY)	65	4.0
LASTHENIA CALIFORNICA[1] (GOLDFIELDS)	45	2.0
LOTUS SCOPARIUS[1] (DEERWEED)	70	6.0
NASSELLA PULCHRA[1] (PURPLE NEEDLGGRASS)	50	8.0
NASSELLA LEPIDA1[1] (FOOTHILLS NEEDLEGRASS)	50	2.5
	TOTAL	30.0

[1] SEED PRODUCED IN CALIFORNIA ONLY
(N) NOT A SEPARATE PAY ITEM, FOR INFORMATION ONLY

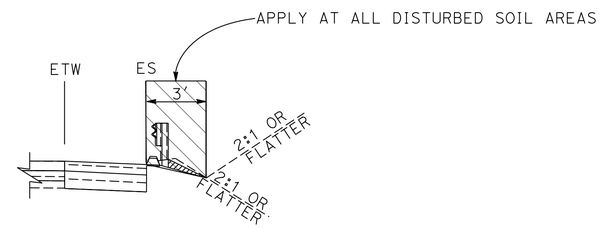

TYPICAL PLACEMENT
NO SCALE

EROSION CONTROL QUANTITIES

LINE	DIRECTION	LOCATION FROM STA	LOCATION TO STA	EROSION CONTROL (BONDED FIBER MATRIX) SQFT
"SD-5"	NB	3099+00	3851+20	227,000
"SD-5"	SB	3099+00	3851+20	227,000
TOTAL				454,000

APPROVED FOR EROSION CONTROL WORK ONLY

EROSION CONTROL LEGEND, DETAILS AND QUANTITIES

NO SCALE

ECL-1

STATE OF CALIFORNIA - DEPARTMENT OF TRANSPORTATION
Caltrans®
DESIGN

FUNCTIONAL SUPERVISOR: EDWARD HAJJ
CALCULATED-DESIGNED BY: ABDUL MALIKYAR
CHECKED BY: HECTOR GRACIA
REVISED BY
DATE REVISED

LAST REVISION 08-19-13
DATE PLOTTED => 31-OCT-2013
TIME PLOTTED => 15:25

Dist	COUNTY	ROUTE	POST MILES TOTAL PROJECT	SHEET No.	TOTAL SHEETS
11	SD	5	R58.1/R72.4	229	259

Enrique P Bernal 07-15-13
REGISTERED ELECTRICAL ENGINEER DATE

11-04-13
PLANS APPROVAL DATE

REGISTERED PROFESSIONAL ENGINEER ENRIQUE P.BERNAL No. 15675 Exp. 6-30-14 ELECTRICAL STATE OF CALIFORNIA

THE STATE OF CALIFORNIA OR ITS OFFICERS OR AGENTS SHALL NOT BE RESPONSIBLE FOR THE ACCURACY OR COMPLETENESS OF SCANNED COPIES OF THIS PLAN SHEET.

NOTES:

1 - RC PULL BOX AND REPLACE WITH NEW No. 5 PULL BOX.

2 - SEE PULL BOX REPLACEMENT DETAIL ON THIS SHEET.

3 - THE CONTRACTOR SHALL VERIFY CONTROLLING FIELD DIMENSIONS BEFORE ORDERING OR FABRICATING ANY MATERIAL.

4 - FOR ACCURATE RIGHT OF WAY DATA, CONTACT RIGHT OF WAY ENGINEERING AT THE DISTRICT OFFICE.

ABBREVIATIONS AND LEGENDS:

N△C = EXISTING CONDUIT NO CHANGE.

WSB = WEIGH STATION BYPASS SYSTEM

stc = Exist SCREENED TRANSMISSION CABLE

TXC = TRANSMISSION CABLE

SLC = SCALE LEAD-IN-CABLE

slc = Exist SCALE LEAD-IN-CABLE

⇦ = DIRECTION OF TRAFFIC

PULL BOX SCHEDULE

LINE	DIRECTION	STATION LIMITS FROM	STATION LIMITS TO	PULL BOX 2 EA	SERVICE POLE AND VOLTAGE	REMARKS
"SD-5"	Rte 5 NB	3178+00	3179+00	1	P#498-154 (SDG&E), F9.52, 480 V.	PULL BOX LOCATED ADJACENT TO LIGHTING STANDARD L59.616.
"SD-5"	↓	3354+00	3354+50	1	G2.94, 120/240 V (SDG&E).	
"SD-5"	↓	3373+00	3374+00	1	G3.28, 120 V (SDG&E).	
"SD-5"	↓	3539+00	3540+00	1	PAD-XFMR (SDG&E), G7.23, 120/240 V.	
"SD-5"	↓	3540+50	3541+50	1		
(RAMPS)	↓					
"AR4"	Rte 5 NB	28+30	28+60	1	3947 S EL CAMINO REAL, P#124354, H2.30, 120/240 V.	PULL BOX LOCATED IN NORTHWEST QUAD ADA RAMP.
"SD-5"	Rte 5 SB	3563+00	3565+00	1	PAD-XFMR (SDG&E), G7.23, 120/240 V.	
"SD-5"	↑	3599+00	3601+00	2		
(RAMPS)	↑					
"R3"	Rte 5 SB	3798+50	3798+80	1	P#222807 (SDG&E), H1.34, 120/240 V.	PULL BOX LOCATED IN SOUTHEAST QUAD ADA RAMP.
			TOTAL	10		

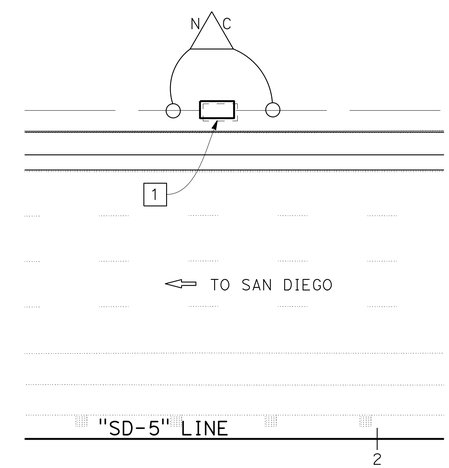

PULL BOX REPLACEMENT DETAIL (Typ)

ROUTE 5

(SB DIRECTION SHOWN ONLY)

APPROVED FOR ELECTRICAL WORK ONLY

NO SCALE

PULL BOX E-1

STATE OF CALIFORNIA - DEPARTMENT OF TRANSPORTATION
Caltrans TRAFFIC ELECTRICAL

FUNCTIONAL SUPERVISOR: RAJPREET SINGH
CALCULATED-DESIGNED BY: HUA SAWAYA
CHECKED BY: ENRIQUE BERNAL
REVISED BY
DATE REVISED

LAST REVISION 08-19-13
DATE PLOTTED => 31-OCT-2013
TIME PLOTTED => 15:25

Dist	COUNTY	ROUTE	POST MILES TOTAL PROJECT	SHEET No.	TOTAL SHEETS
11	SD	5	R58.1/R72.4	230	259

Enrique P Bernal 07-15-13
REGISTERED ELECTRICAL ENGINEER DATE

11-04-13
PLANS APPROVAL DATE

REGISTERED PROFESSIONAL ENGINEER ENRIQUE P.BERNAL No. 15675 Exp. 6-30-14 ELECTRICAL STATE OF CALIFORNIA

THE STATE OF CALIFORNIA OR ITS OFFICERS OR AGENTS SHALL NOT BE RESPONSIBLE FOR THE ACCURACY OR COMPLETENESS OF SCANNED COPIES OF THIS PLAN SHEET.

CONDUIT NOTES:

1 - 2"C, 4 DLC
4 TXC

2 - Exist 2"C, 4 dlc
4 stc
RC 4 dlc, 4 stc
ADD: 4 DLC
4 TXC

3 - Exist 2"C, 4 dlc
8 stc
RC 4 dlc, 8 stc
ADD: 8 DLC
8 TXC

4 - Exist 4"C, 4 dlc
8 stc
1 ANTENNA CABLE
RC 4 dlc, 8 stc
ADD: 8 DLC
8 TXC

5 - Exist 3"c, 1 ANTENNA CABLE
- Exist 3"C, 5 dlc
8 stc
RC 4 dlc, 8 stc
ADD: 8 DLC
8 TXC

NAC 6 - Exist 2"C, 2#8(WSB CONTROLLER)

NAC 7 - Exist 2"C, 1 comm CABLE

NAC 8 - Exist 2"C, 1 ANTENNA CABLE

NAC 9 - Exist 2"C, 4#2(cms)
3#6(ltg)
2#8(WSB CONTROLLER)

NOTES:

1 - RC CABINET, INSTALL NEW WSB CONTROLLER CABINET ON EXISTING FOUNDATION.

2 - REPLACE EXISTING PULL BOX WITH No. 6(E)(T) PULL BOX.

3 - AB EMBEDDED AXLE SENSORS AND LOOPS.

4 - AB AUTOMATED VEHICLE IDENTIFICATION ANTENNA ASSEMBLY.

5 - INSTALL PIEZOELECTRIC SENSOR UNIT SEE INSTALLATION DETAILS ON SHEET E-5.

6 - TO EXISTING SERVICE DISCONNECT LOCATED AT SAN ONOFRE TRUCK INSPECTION FACILITY.

7 - FOR ACCURATE RIGHT OF WAY DATA, CONTACT RIGHT OF WAY ENGINEERING AT THE DISTRICT OFFICE.

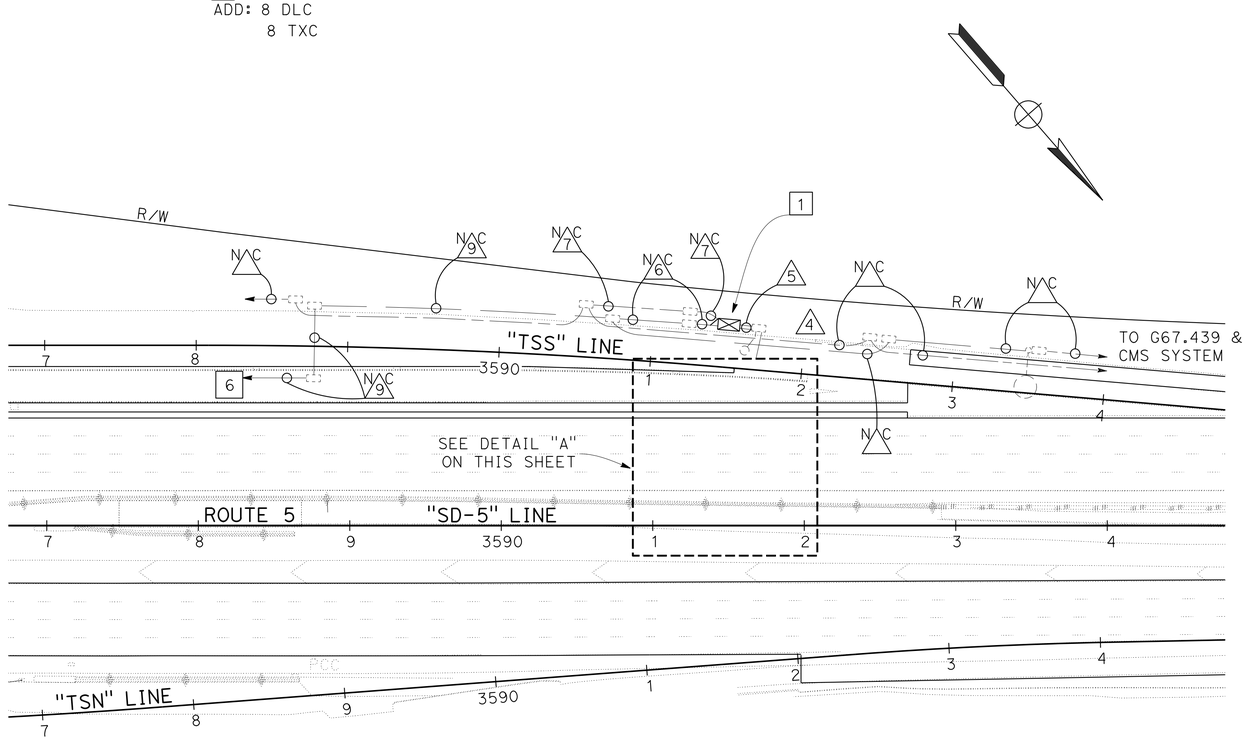

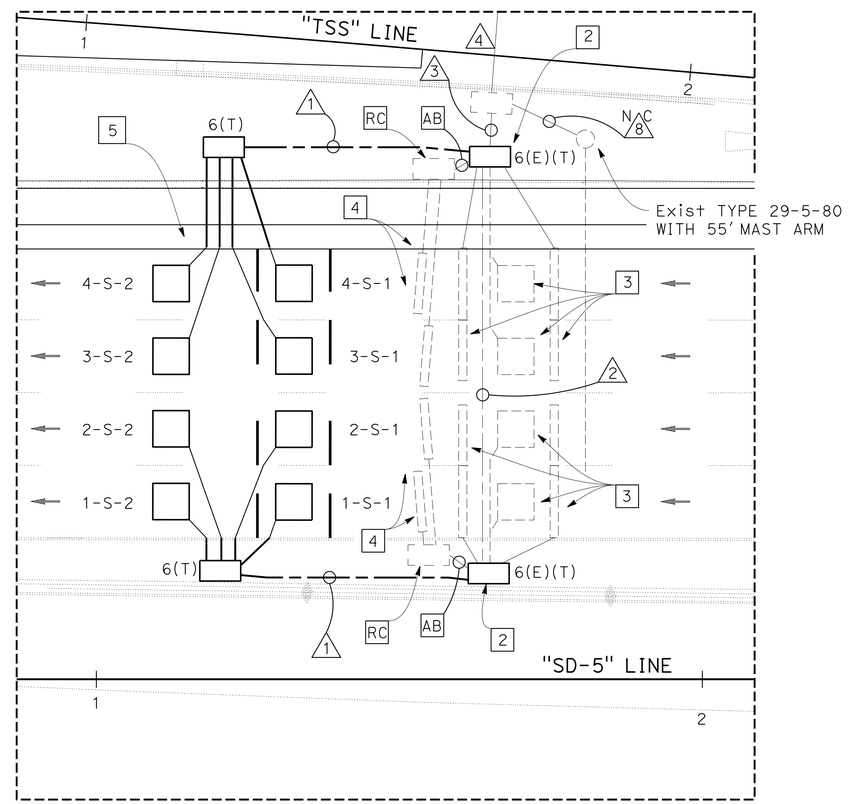

DETAIL "A"
NO SCALE

R/W

APPROVED FOR ELECTRICAL WORK ONLY

WEIGH STATION BYPASS SYSTEM

SCALE 1" = 50'

E-2

STATE OF CALIFORNIA - DEPARTMENT OF TRANSPORTATION
Caltrans TRAFFIC ELECTRICAL

FUNCTIONAL SUPERVISOR: RAJPREET SINGH
CALCULATED-DESIGNED BY: HUA SAWAYA
CHECKED BY: ENRIQUE BERNAL
REVISED BY
DATE REVISED

LAST REVISION 08-19-13
DATE PLOTTED => 31-OCT-2013
TIME PLOTTED => 15:25

Dist	COUNTY	ROUTE	POST MILES TOTAL PROJECT	SHEET No.	TOTAL SHEETS
11	SD	5	R58.1/R72.4	231	259

Enrique P Bernal 07-15-13
REGISTERED ELECTRICAL ENGINEER DATE

11-04-13
PLANS APPROVAL DATE

REGISTERED PROFESSIONAL ENGINEER ENRIQUE P.BERNAL No. 15675 Exp. 6-30-14 ELECTRICAL STATE OF CALIFORNIA

THE STATE OF CALIFORNIA OR ITS OFFICERS OR AGENTS SHALL NOT BE RESPONSIBLE FOR THE ACCURACY OR COMPLETENESS OF SCANNED COPIES OF THIS PLAN SHEET.

NOTES:

1 - Exist WEIGH STATION BYPASS SYSTEM PARTIALLY SHOWN ONLY.

2 - Exist CONDUIT, PULL BOXES AND SIGNAL STANDARD TO REMAIN UNLESS OTHERWISE NOTED.

3 - RC CABINET, INSTALL NEW WSB CONTROLLER CABINET ON EXISTING FOUNDATION.

4 - REPLACE EXISTING PULL BOX WITH No. 6(E)(T) PULL BOX.

5 - INSTALL WIM SYSTEM, SEE WIM INSTALLATION DETAIL ON SHEET E-4.

6 - INSTALL PIEZOELECTRIC SENSOR UNIT SEE INSTALLATION DETAILS ON SHEET E-5.

7 - FOR ACCURATE RIGHT OF WAY DATA, CONTACT RIGHT OF WAY ENGINEERING AT THE DISTRICT OFFICE.

CONDUIT NOTES:

1 - 2"C, 4 DLC
4 TXC

2 - 3"C, 4 DLC
4 SLC

3 - Exist 3"C, 4 dlc
4 slc
1 DATA CABLE
RC 4 dlc, 4 slc
ADD: 8 DLC
4 TXC
4 SLC

NAC 4 - Exist 3"C, 1 DATA CABLE
1 ANTENNA CABLE

5 - Exist 3"C, 4 dlc
4 slc
RC 4 dlc, 4 slc
ADD: 8 DLC
4 TXC
4 SLC

NAC 6 - Exist 2"C, 2#8(WSB CONTROLLER)

NAC 7 - Exist 2"C, 1 DATA CABLE

NAC 8 - Exist 2"C, 1 ANTENNA CABLE

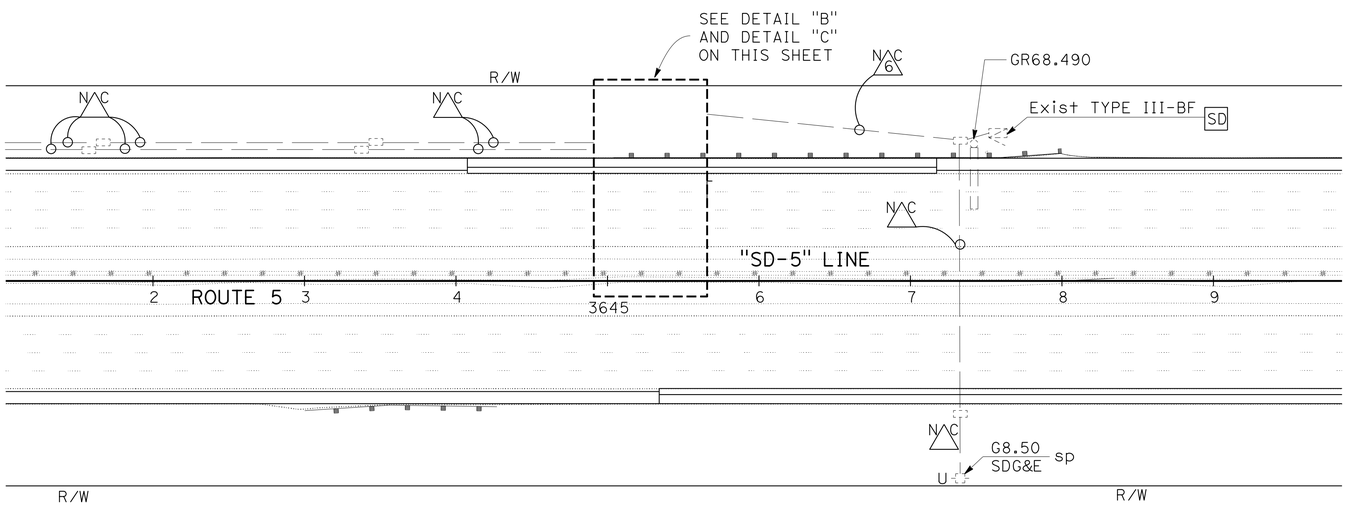

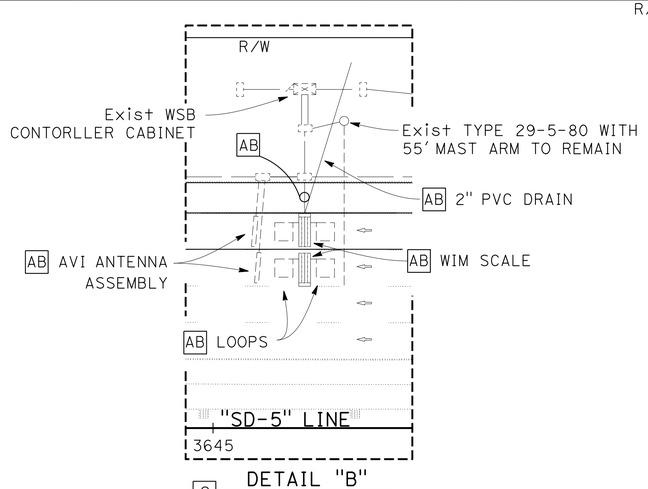

2 DETAIL "B"
EXISTING WIM
NO SCALE

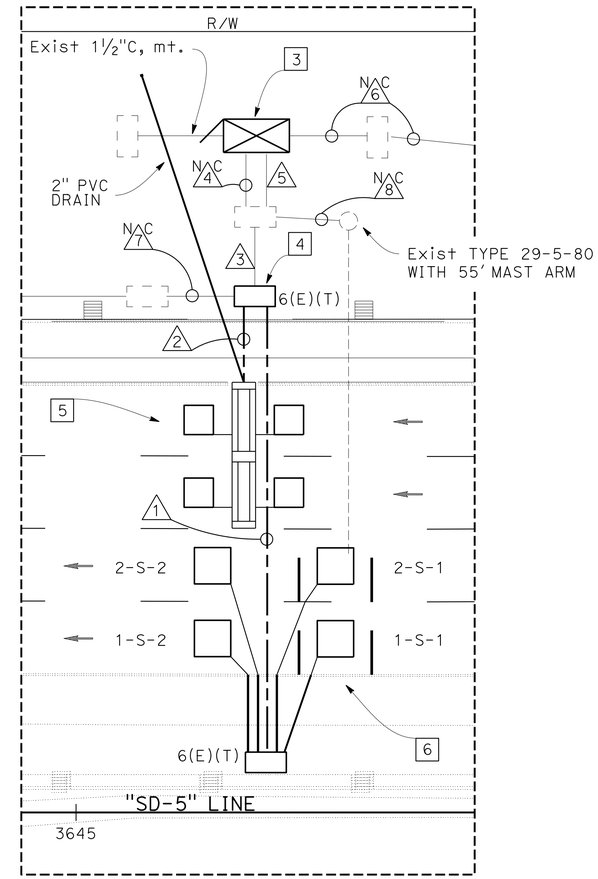

DETAIL "C"
NO SCALE

APPROVED FOR ELECTRICAL WORK ONLY

WEIGH STATION BYPASS SYSTEM

SCALE 1" = 50'

E-3

REVISED BY	DATE REVISED

CALCULATED-DESIGNED BY	CHECKED BY
HUA SAWAYA	ENRIQUE BERNAL

FUNCTIONAL SUPERVISOR
RAJPREET SINGH

STATE OF CALIFORNIA - DEPARTMENT OF TRANSPORTATION
Caltrans TRAFFIC ELECTRICAL

LAST REVISION 08-19-13 | DATE PLOTTED => 31-OCT-2013 | TIME PLOTTED => 15:25

Dist	COUNTY	ROUTE	POST MILES TOTAL PROJECT	SHEET No.	TOTAL SHEETS
11	SD	5	R58.1/R72.4	232	259

Enrique P Bernal 07-15-13
REGISTERED ELECTRICAL ENGINEER DATE

11-04-13
PLANS APPROVAL DATE

REGISTERED PROFESSIONAL ENGINEER ENRIQUE P.BERNAL No. 15675 Exp. 6-30-14 ELECTRICAL STATE OF CALIFORNIA

THE STATE OF CALIFORNIA OR ITS OFFICERS OR AGENTS SHALL NOT BE RESPONSIBLE FOR THE ACCURACY OR COMPLETENESS OF SCANNED COPIES OF THIS PLAN SHEET.

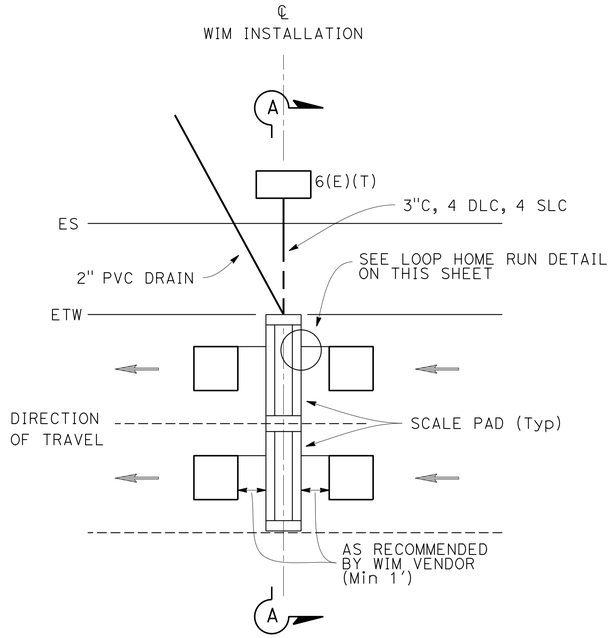

WIM INSTALLATION DETAIL (TYPICAL)

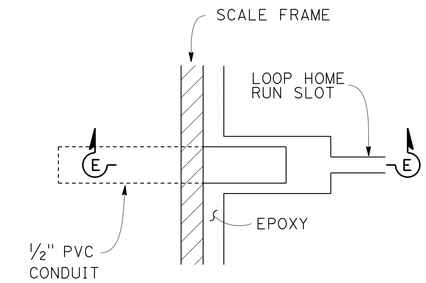

LOOP HOME RUN DETAIL

PLAN VIEW

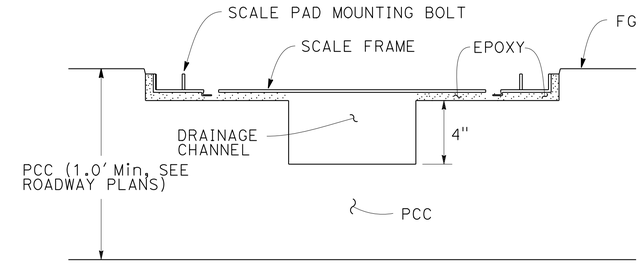

SECTION B-B

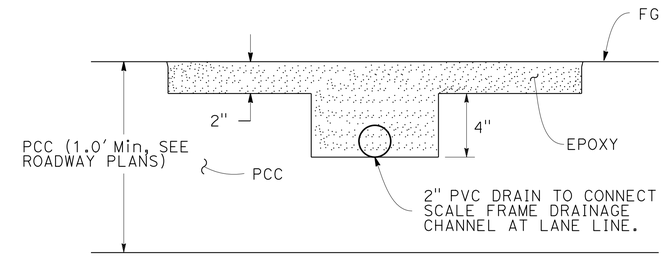

SECTION C-C

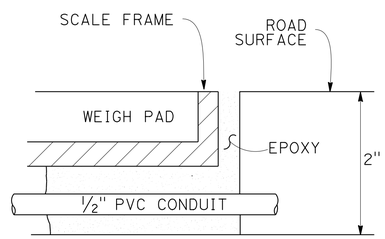

SECTION E-E

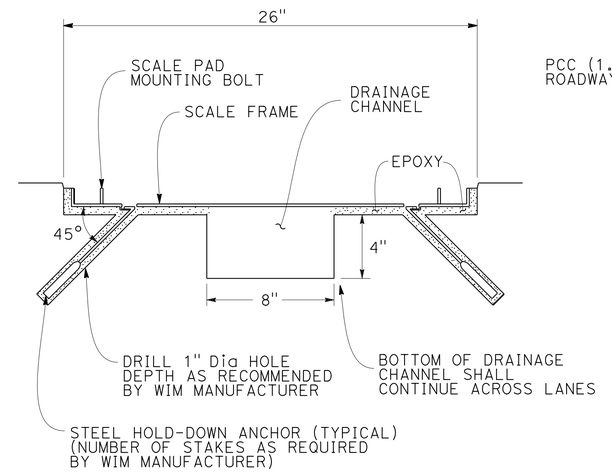

SCALE FRAME INSTALLATION (TYPICAL)

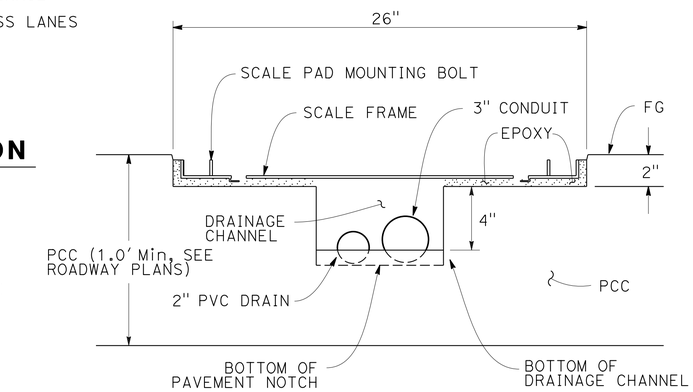

SECTION D-D

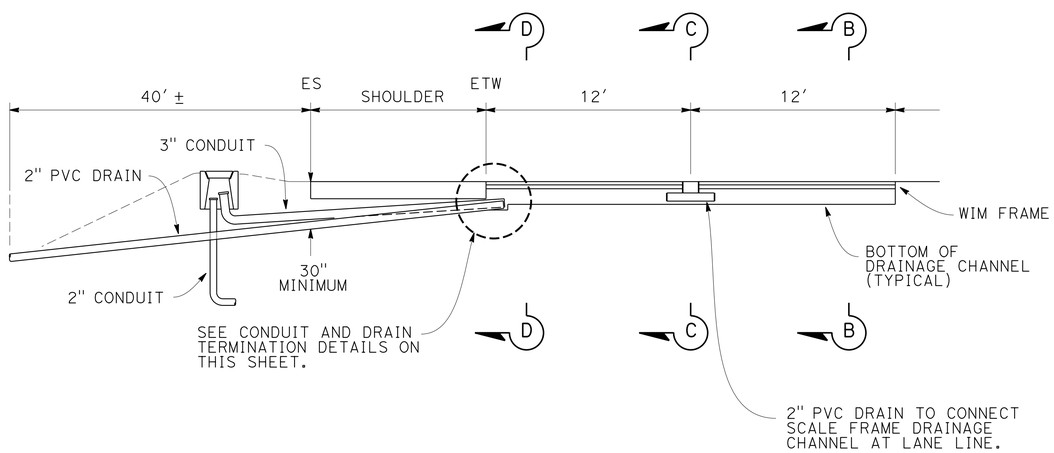

SECTION A-A

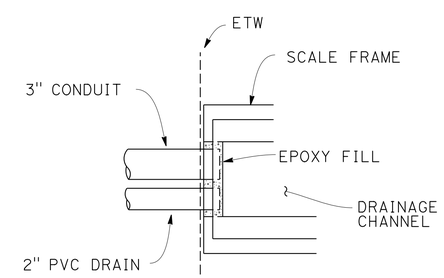

CONDUIT AND DRAIN TERMINATION DETAILS

WEIGH STATION BYPASS SYSTEM (ELECTRICAL DETAILS)

APPROVED FOR ELECTRICAL WORK ONLY

NO SCALE

E-4

STATE OF CALIFORNIA - DEPARTMENT OF TRANSPORTATION
Caltrans TRAFFIC ELECTRICAL

FUNCTIONAL SUPERVISOR: RAJPREET SINGH
CALCULATED-DESIGNED BY: HUA SAWAYA
CHECKED BY: ENRIQUE BERNAL
REVISED BY / DATE REVISED

LAST REVISION 08-19-13 | DATE PLOTTED => 31-OCT-2013 | TIME PLOTTED => 15:25

Dist	COUNTY	ROUTE	POST MILES TOTAL PROJECT	SHEET No.	TOTAL SHEETS
11	SD	5	R58.1/R72.4	233	259

Enrique P Bernal 07-15-13
REGISTERED ELECTRICAL ENGINEER DATE

11-04-13
PLANS APPROVAL DATE

REGISTERED PROFESSIONAL ENGINEER ENRIQUE P. BERNAL No. 15675 Exp. 6-30-14 ELECTRICAL STATE OF CALIFORNIA

THE STATE OF CALIFORNIA OR ITS OFFICERS OR AGENTS SHALL NOT BE RESPONSIBLE FOR THE ACCURACY OR COMPLETENESS OF SCANNED COPIES OF THIS PLAN SHEET.

NOTE:

1 - PLACE 2" DUCT TAPE ALONG THE EDGE OF SAW CUT BEFORE POURING EPOXY SEALANT. LEVEL EPOXY SEALANT TO FINISHED ROAD SURFACE AND REMOVE DUCT TAPE WHEN EPOXY IS CURED.

SECOND LOOP DLC	SECOND SENSOR TRANSMISSION CABLE	FIRST LOOP DLC	FIRST SENSOR TRANSMISSION CABLE
1-S-2	1-S-2S	1-S-1	1-S-1S

PIEZOELECTRIC SENSOR IDENTIFICATION

← DIRECTION OF TRAVEL (TYPICAL)

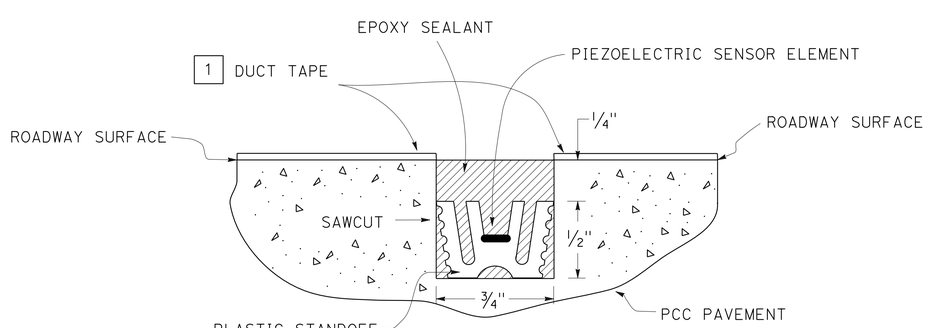

SECTION G-G

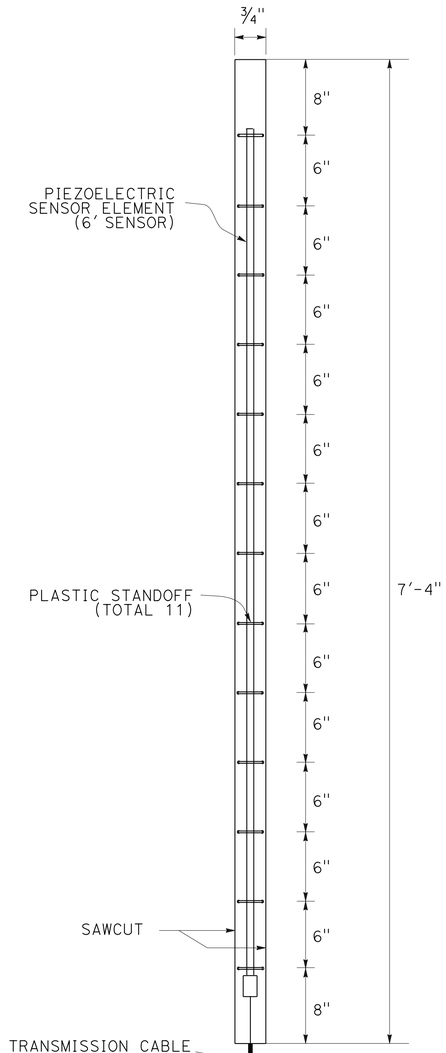

DETAIL "M"

SENSOR INSTALLATION

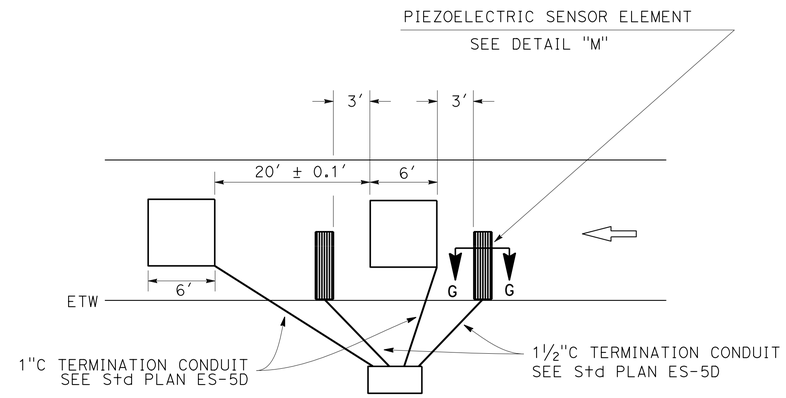

SENSOR PLACEMENT

TYPICAL

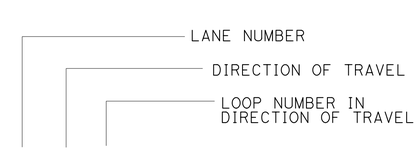

MAINLINE LOOP DETECTOR IDENTIFICATION

PIEZOELECTRIC SENSOR INSTALLATION DETAILS

APPROVED FOR ELECTRICAL WORK ONLY

WEIGH STATION BYPASS SYSTEM (ELECTRICAL DETAILS)

NO SCALE

E-5

STATE OF CALIFORNIA - DEPARTMENT OF TRANSPORTATION
Caltrans TRAFFIC ELECTRICAL

FUNCTIONAL SUPERVISOR: RAJPREET SINGH
CALCULATED-DESIGNED BY: HUA SAWAYA
CHECKED BY: ENRIQUE BERNAL
REVISED BY
DATE REVISED

LAST REVISION 08-19-13
DATE PLOTTED => 31-OCT-2013
TIME PLOTTED => 15:26

Dist	COUNTY	ROUTE	POST MILES TOTAL PROJECT	SHEET No.	TOTAL SHEETS
11	SD	5	R58.1/R72.4	234	259

REGISTERED CIVIL ENGINEER

April 20, 2012
PLANS APPROVAL DATE

REGISTERED PROFESSIONAL ENGINEER
Roberta L. McLaughlin
No. C40375
Exp. 3-31-13
CIVIL
STATE OF CALIFORNIA

THE STATE OF CALIFORNIA OR ITS OFFICERS OR AGENTS SHALL NOT BE RESPONSIBLE FOR THE ACCURACY OR COMPLETENESS OF SCANNED COPIES OF THIS PLAN SHEET.

TO ACCOMPANY PLANS DATED 11-04-13

2010 REVISED STANDARD PLAN RSP A24A

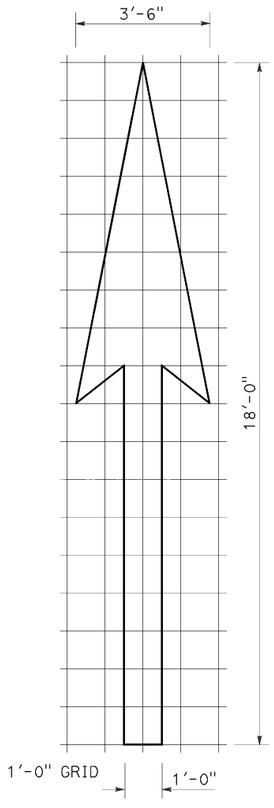

A=25 ft^2

TYPE I 18'-0" ARROW

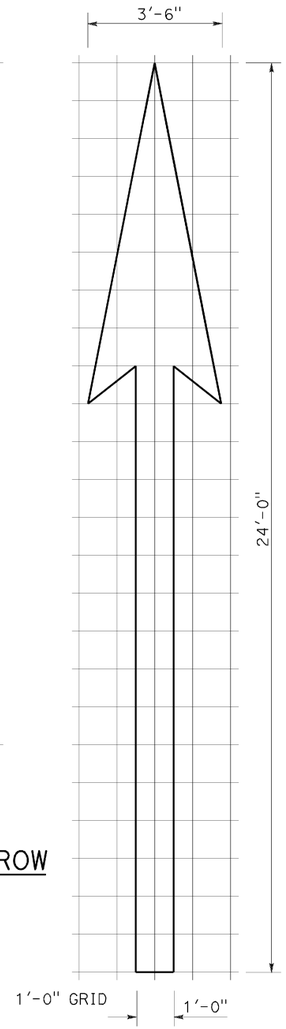

A=31 ft^2

TYPE I 24'-0" ARROW

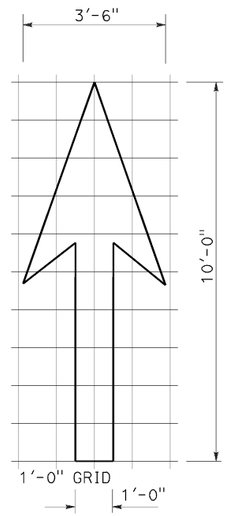

A=14 ft^2

TYPE I 10'-0" ARROW

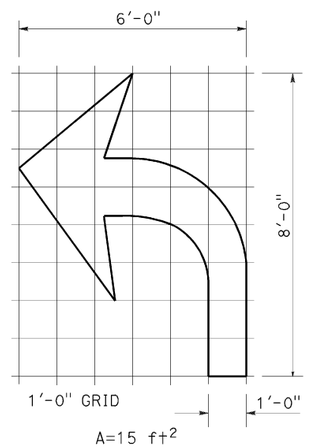

A=15 ft^2

TYPE IV (L) ARROW

(For Type IV (R) arrow, use mirror image)

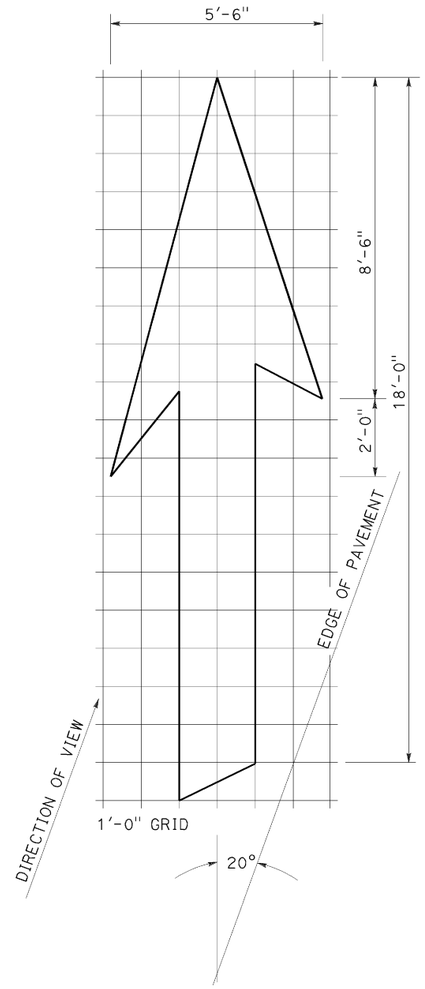

A=42 ft^2

TYPE VI ARROW

Right lane drop arrow
(For left lane, use mirror image)

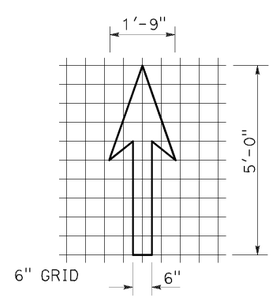

A=3.5 ft^2

BIKE LANE ARROW

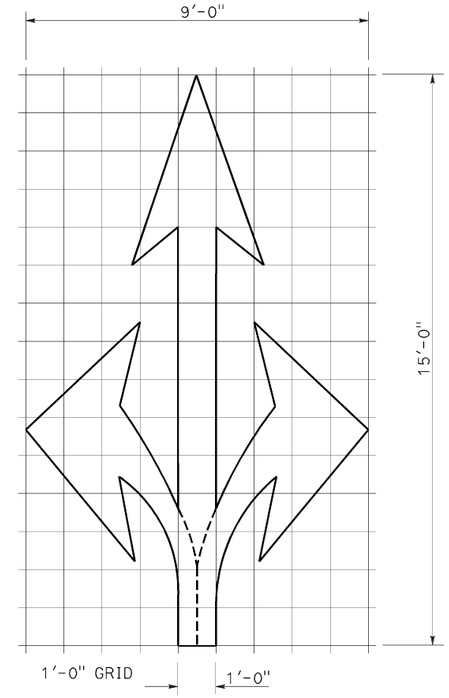

A=36 ft^2

TYPE VIII ARROW

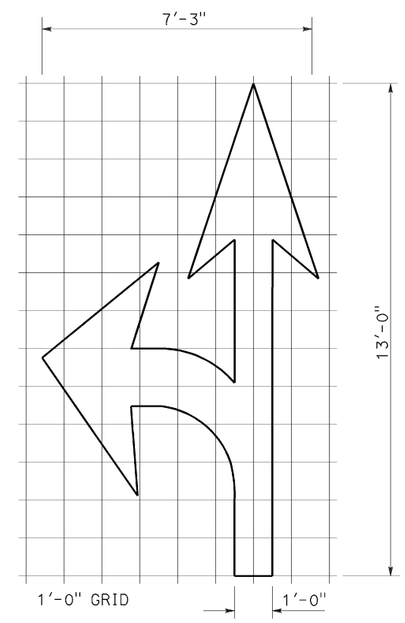

A=27 ft^2

TYPE VII (L) ARROW

(For Type VII (R) arrow, use mirror image)

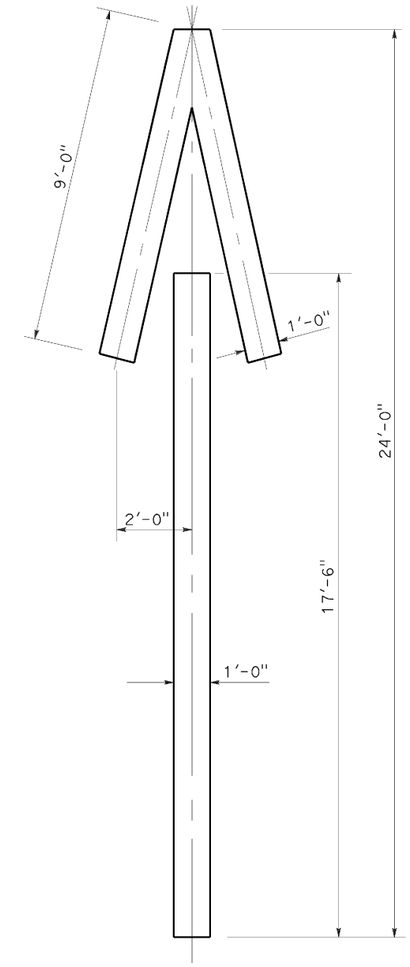

A=33 ft^2

TYPE V ARROW

NOTE:
Minor variations in dimensions may be accepted by the Engineer.

STATE OF CALIFORNIA
DEPARTMENT OF TRANSPORTATION

PAVEMENT MARKINGS ARROWS

NO SCALE

RSP A24A DATED APRIL 20, 2012 SUPERSEDES STANDARD PLAN A24A DATED MAY 20, 2011 - PAGE 13 OF THE STANDARD PLANS BOOK DATED 2010.

REVISED STANDARD PLAN RSP A24A

3-14-12

Dist	COUNTY	ROUTE	POST MILES TOTAL PROJECT	SHEET No.	TOTAL SHEETS
11	SD	5	R58.1/R72.4	235	259

REGISTERED CIVIL ENGINEER

October 19, 2012
PLANS APPROVAL DATE

REGISTERED PROFESSIONAL ENGINEER Roberta L. McLaughlin No. C40375 Exp. 3-31-13 CIVIL STATE OF CALIFORNIA

THE STATE OF CALIFORNIA OR ITS OFFICERS OR AGENTS SHALL NOT BE RESPONSIBLE FOR THE ACCURACY OR COMPLETENESS OF SCANNED COPIES OF THIS PLAN SHEET.

NOTE: TO ACCOMPANY PLANS DATED 11-04-13

Minor variations in dimensions may be accepted by the Engineer.

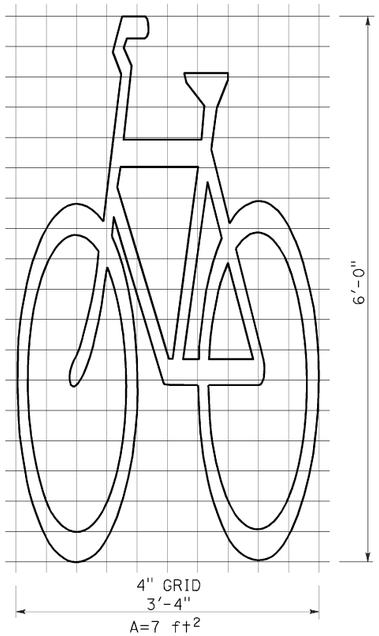

BIKE LANE SYMBOL WITHOUT PERSON

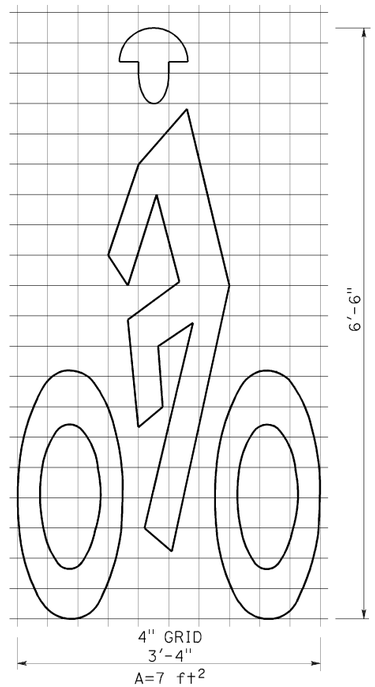

BIKE LANE SYMBOL WITH PERSON

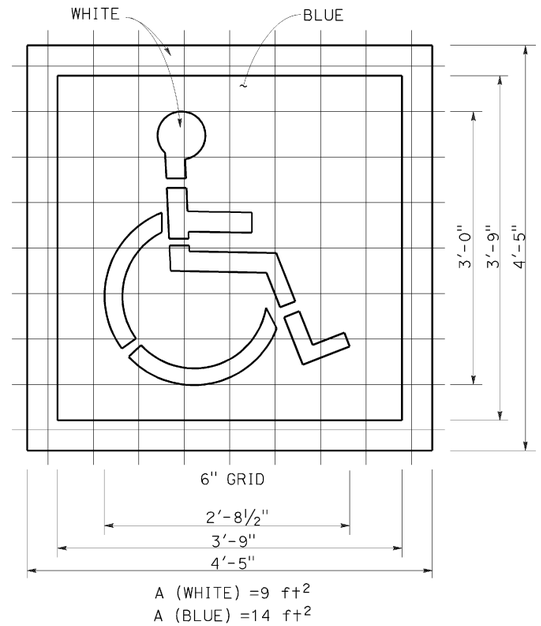

INTERNATIONAL SYMBOL OF ACCESSIBILITY (ISA) MARKING

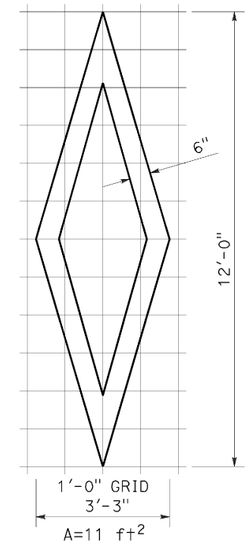

DIAMOND SYMBOL

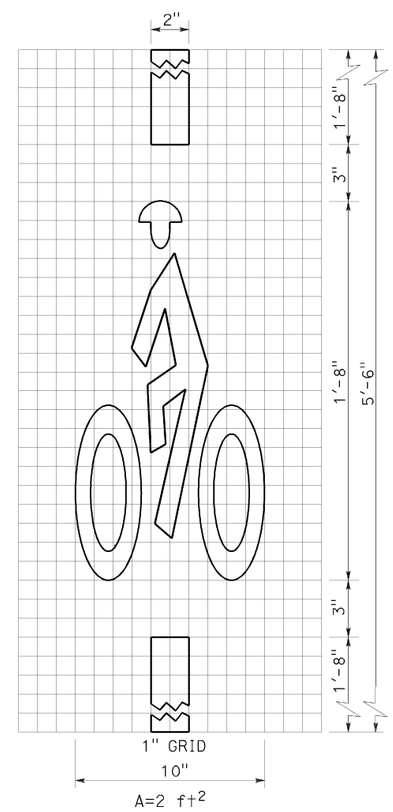

BICYCLE LOOP DETECTOR SYMBOL

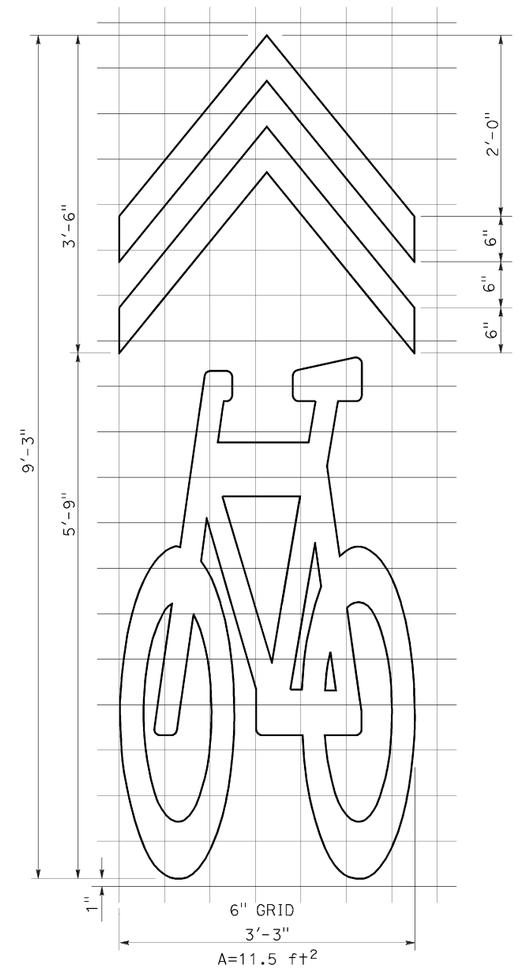

SHARED ROADWAY BICYCLE MARKING

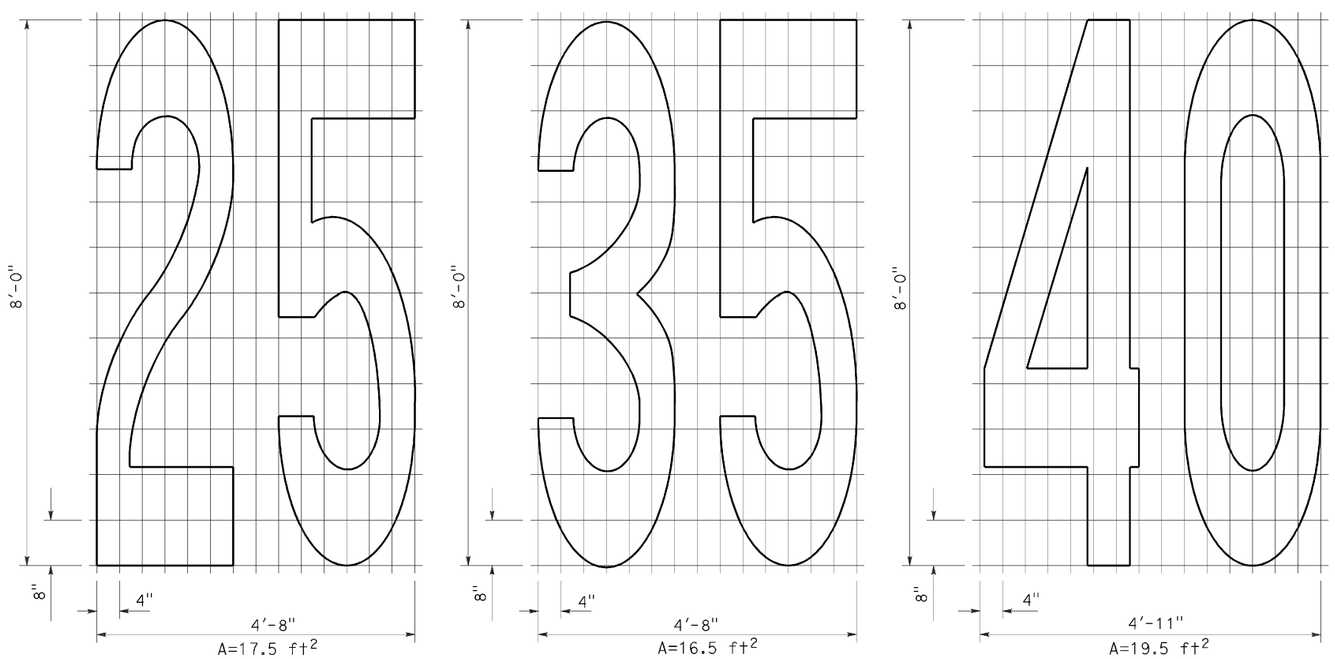

NUMERALS

STATE OF CALIFORNIA
DEPARTMENT OF TRANSPORTATION

PAVEMENT MARKINGS SYMBOLS AND NUMERALS

NO SCALE

RSP A24C DATED OCTOBER 19, 2012 SUPERSEDES STANDARD PLAN A24C DATED MAY 20, 2011 - PAGE 15 OF THE STANDARD PLANS BOOK DATED 2010.

REVISED STANDARD PLAN RSP A24C

2010 REVISED STANDARD PLAN RSP A24C

6-28-12

Dist	COUNTY	ROUTE	POST MILES TOTAL PROJECT	SHEET No.	TOTAL SHEETS
11	SD	5	R58.1/R72.4	236	259

REGISTERED CIVIL ENGINEER

July 20, 2012
PLANS APPROVAL DATE

REGISTERED PROFESSIONAL ENGINEER
Roberta L. McLaughlin
No. C40375
Exp. 3-31-13
CIVIL
STATE OF CALIFORNIA

THE STATE OF CALIFORNIA OR ITS OFFICERS OR AGENTS SHALL NOT BE RESPONSIBLE FOR THE ACCURACY OR COMPLETENESS OF SCANNED COPIES OF THIS PLAN SHEET.

TO ACCOMPANY PLANS DATED 11-04-13

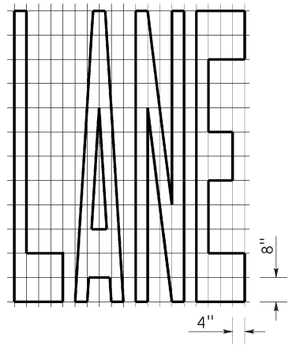

A=24 ft^2

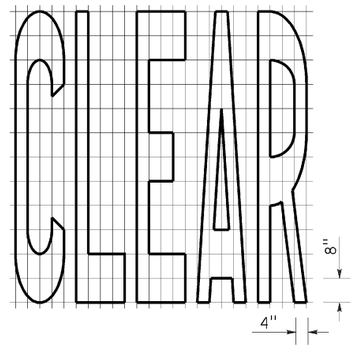

A=27 ft^2

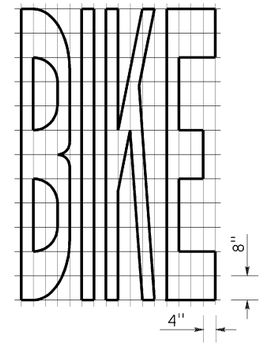

A=21 ft^2

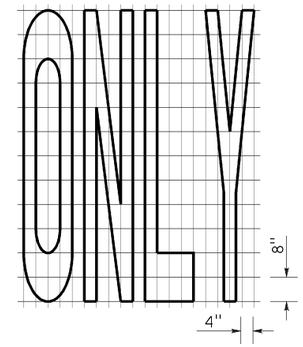

A=22 ft^2

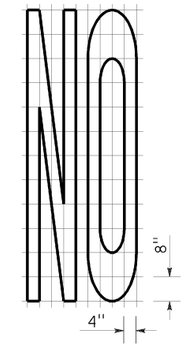

A=14 ft^2

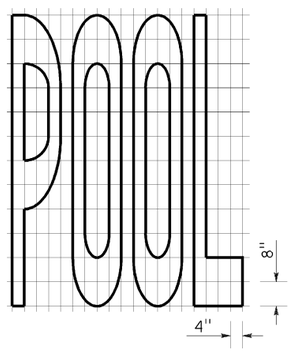

A=23 ft^2

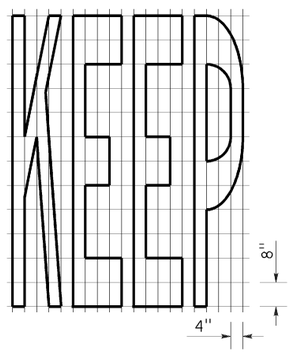

A=24 ft^2

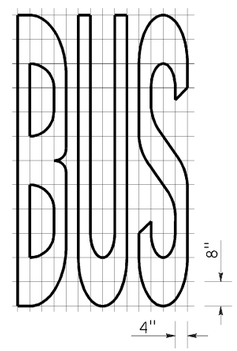

A=20 ft^2

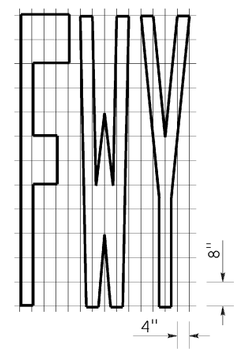

A=16 ft^2

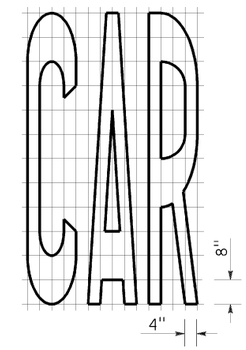

A=17 ft^2

WORD MARKINGS			
ITEM	ft^2	ITEM	ft^2
LANE	24	NO	14
POOL	23	BIKE	21
CAR	17	BUS	20
CLEAR	27	ONLY	22
KEEP	24	FWY	16

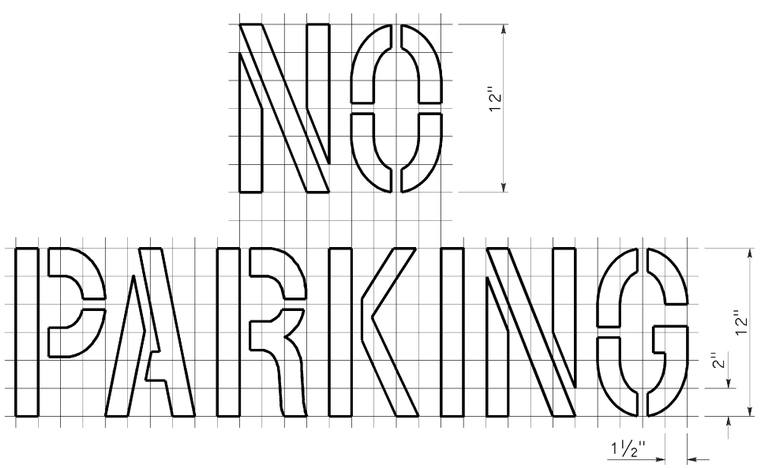

A=2 ft^2
See Notes 6 and 7

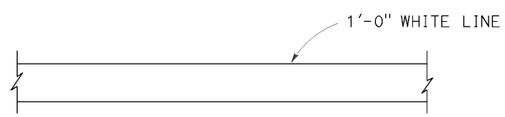

LIMIT LINE (STOP LINE)

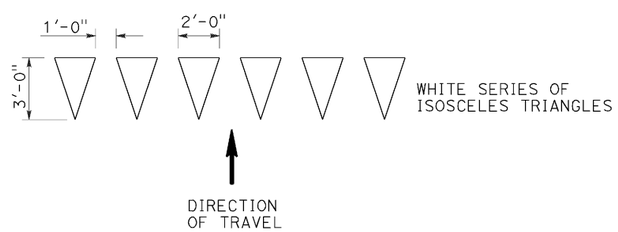

YIELD LINE

NOTES:

1. If a message consists of more than one word, it should read "UP", i.e., the first word should be nearest the driver.
2. The space between words should be at least four times the height of the characters for low speed roads, but not more than ten times the height of the characters. The space may be reduced appropriately where there is limited space because of local conditions.
3. Minor variations in dimensions may be accepted by the Engineer.
4. Portions of a letter, number or symbol may be separated by connecting segments not to exceed 2" in width.
5. The words "NO PARKING" pavement marking is to be used for parking facilities. For typical locations of markings, see Standard Plans A90A and A90B.
6. The words "NO PARKING", shall be painted in white letters no less than 1'-0" high on a contrasting background and located so that it is visible to traffic enforcement officials.

STATE OF CALIFORNIA
DEPARTMENT OF TRANSPORTATION

PAVEMENT MARKINGS WORDS, LIMIT AND YIELD LINES

NO SCALE

RSP A24E DATED JULY 20, 2012 SUPERSEDES STANDARD PLAN A24E
DATED MAY 20, 2011 - PAGE 17 OF THE STANDARD PLANS BOOK DATED 2010.

REVISED STANDARD PLAN RSP A24E

2010 REVISED STANDARD PLAN RSP A24E

Dist	COUNTY	ROUTE	POST MILES TOTAL PROJECT	SHEET No.	TOTAL SHEETS
11	SD	5	R58.1/R72.4	237	259

REGISTERED CIVIL ENGINEER

July 20, 2012
PLANS APPROVAL DATE

REGISTERED PROFESSIONAL ENGINEER
Roberta L. McLaughlin
No. C40375
Exp. 3-31-13
CIVIL
STATE OF CALIFORNIA

THE STATE OF CALIFORNIA OR ITS OFFICERS OR AGENTS SHALL NOT BE RESPONSIBLE FOR THE ACCURACY OR COMPLETENESS OF SCANNED COPIES OF THIS PLAN SHEET.

TO ACCOMPANY PLANS DATED 11-04-13

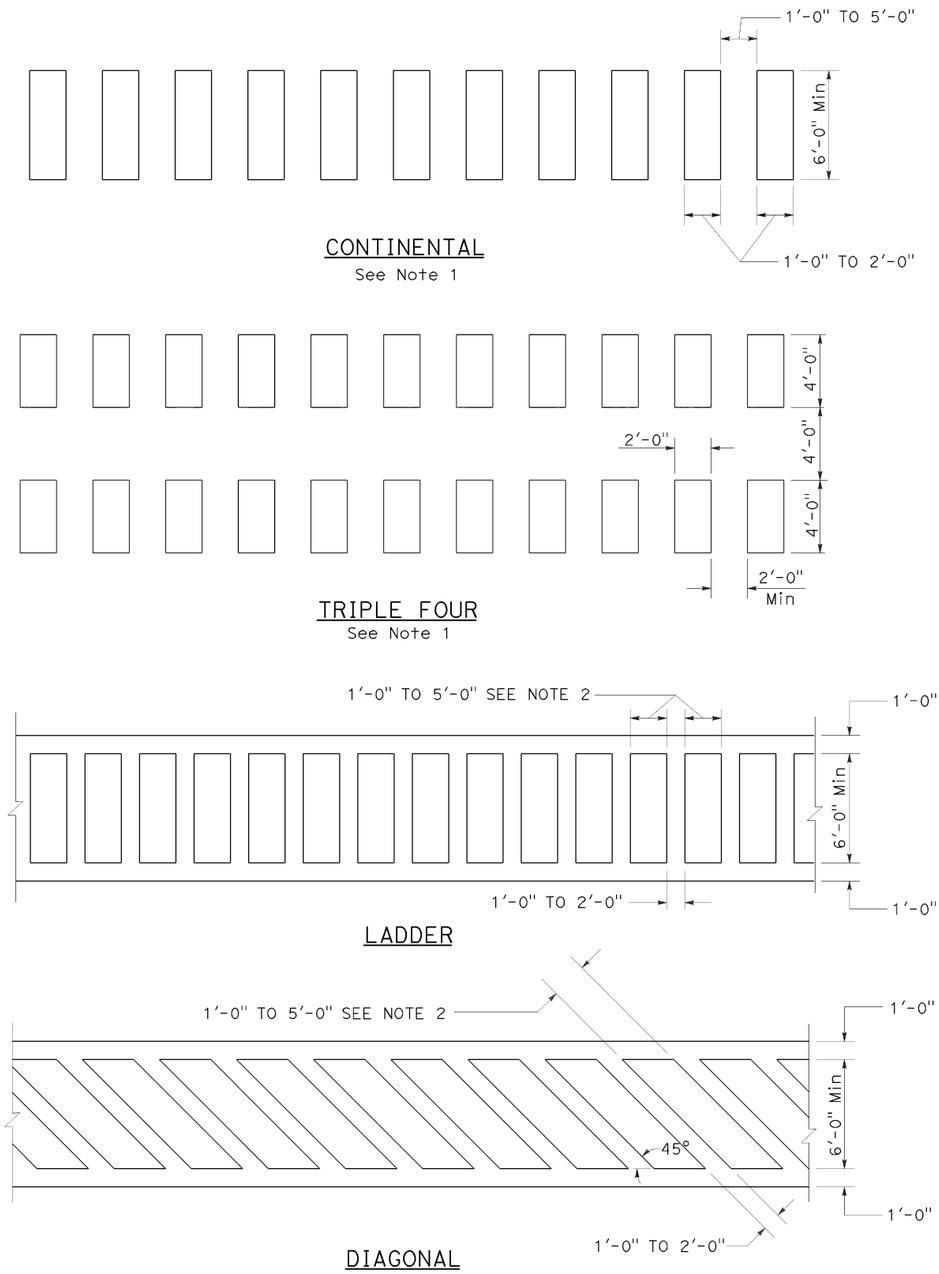

HIGHER VISIBILITY CROSSWALKS

NOTES:

1. Spaces between markings should be placed in wheel tracks of each lane.
2. Spacings not to exceed 2.5 times width of longitudinal line.
3. All crosswalk markings must be white except for those near schools must be yellow.

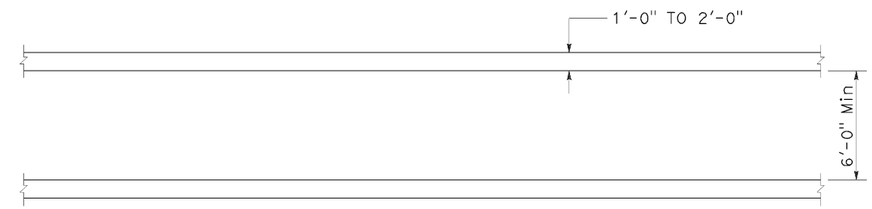

BASIC

STATE OF CALIFORNIA
DEPARTMENT OF TRANSPORTATION

PAVEMENT MARKINGS CROSSWALKS

NO SCALE

RSP A24F DATED JULY 20, 2012 SUPPLEMENTS THE STANDARD PLANS BOOK DATED 2010.

REVISED STANDARD PLAN RSP A24F

2010 REVISED STANDARD PLAN RSP A24F

6-28-12

Dist	COUNTY	ROUTE	POST MILES TOTAL PROJECT	SHEET No.	TOTAL SHEETS
11	SD	5	R58.1/R72.4	238	259

William K. Farnbach
REGISTERED CIVIL ENGINEER

April 20, 2012
PLANS APPROVAL DATE

REGISTERED PROFESSIONAL ENGINEER William K. Farnbach No. C49042 Exp. 9-30-12 CIVIL STATE OF CALIFORNIA

THE STATE OF CALIFORNIA OR ITS OFFICERS OR AGENTS SHALL NOT BE RESPONSIBLE FOR THE ACCURACY OR COMPLETENESS OF SCANNED COPIES OF THIS PLAN SHEET.

TO ACCOMPANY PLANS DATED 11-04-13

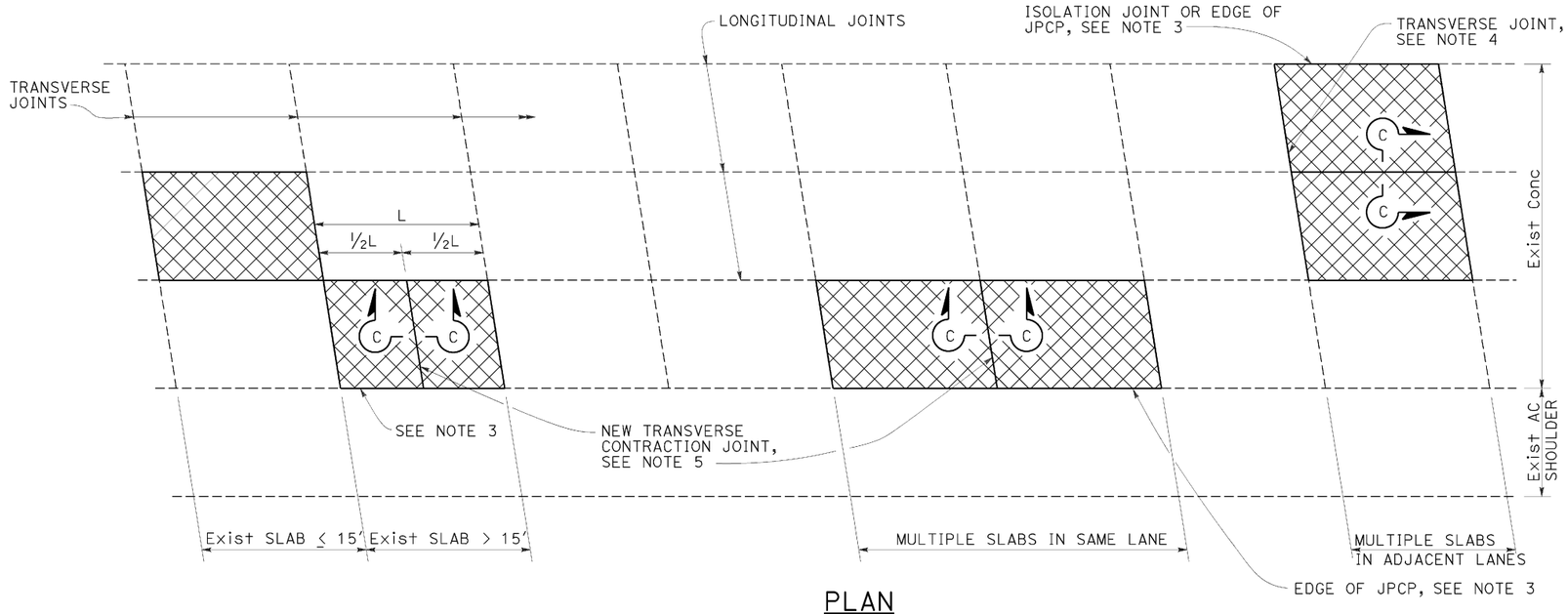

PLAN

NOTES:

1. For details not shown, see Revised Standard Plan P10.
2. Where the existing outer shoulder pavement is asphalt concrete pavement, the "a" dimension shall be 1'-0" and the "b" dimension shall be 2'-0".
3. Side forms shall be used where edge of pavement is adjacent to asphalt concrete.
4. For detail, see Transverse Construction Joint for existing concrete pavement detail on Revised Standard Plan P10.
5. Transverse joint to match skew of existing joint. Omit dowel bars.

LEGEND:

Replace Concrete Pavement (See Slab Layout Detail)

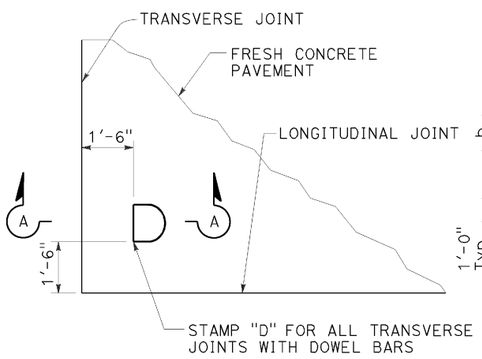

DOWEL STAMP DETAIL

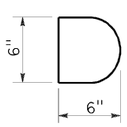

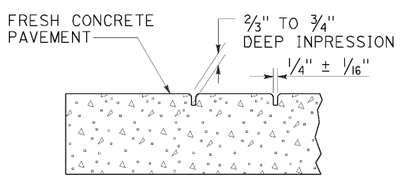

SECTION A-A

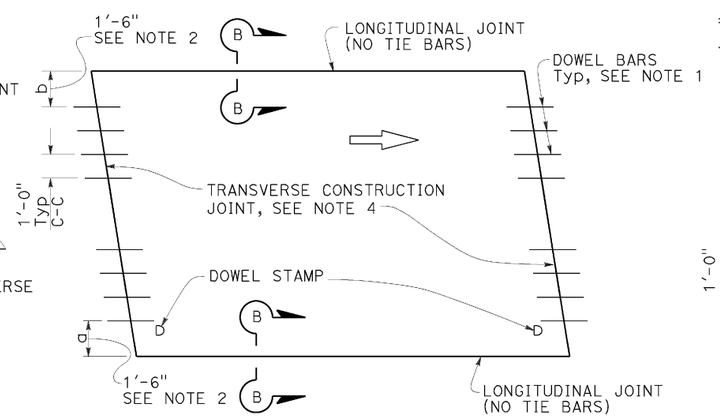

TYPE I

Traffic lane lines match longitudinal joints

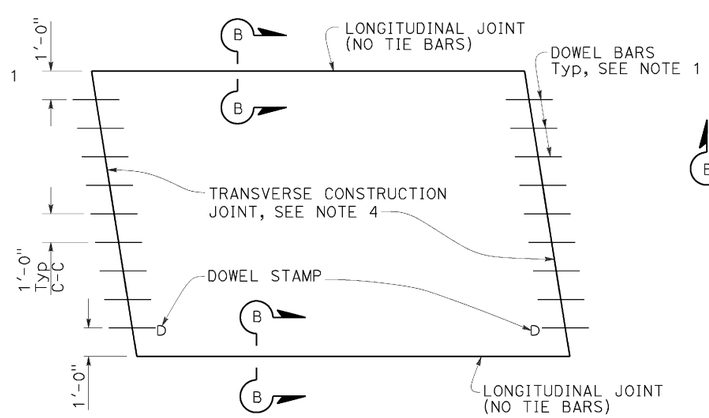

TYPE II

Traffic lane lines do not match longitudinal joints

SLAB LAYOUT

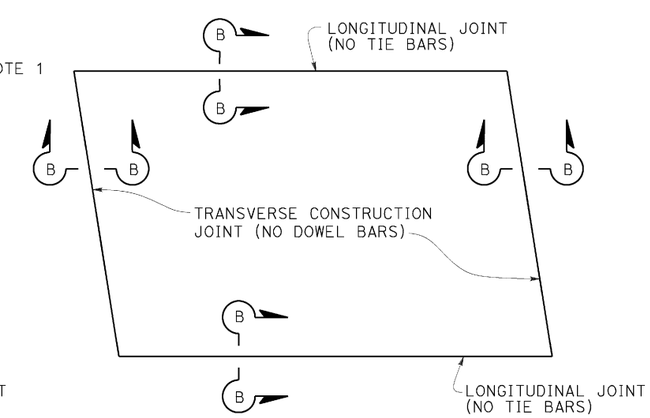

TYPE III

For short term repairs < 5 yrs design life or for slab replacements with a cracking and seating operation

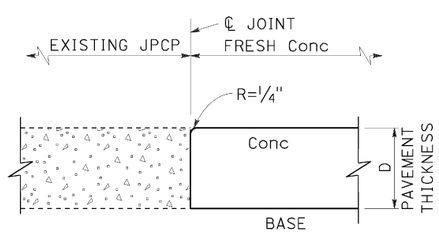

SECTION B-B

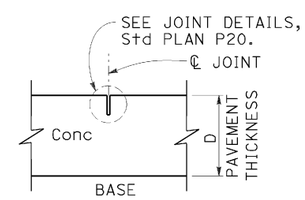

SECTION C-C

STATE OF CALIFORNIA
DEPARTMENT OF TRANSPORTATION

JOINTED PLAIN CONCRETE PAVEMENT-INDIVIDUAL SLAB REPLACEMENT

NO SCALE

RSP P8 DATED APRIL 20, 2012 SUPERSEDES STANDARD PLAN P8
DATED MAY 20, 2011 - PAGE 130 OF THE STANDARD PLANS BOOK DATED 2010.

REVISED STANDARD PLAN RSP P8

2010 REVISED STANDARD PLAN RSP P8

2-22-12

Dist	COUNTY	ROUTE	POST MILES TOTAL PROJECT	SHEET No.	TOTAL SHEETS
11	SD	5	R58.1/R72.4	239	259

William K. Farnbach
REGISTERED CIVIL ENGINEER

April 20, 2012
PLANS APPROVAL DATE

REGISTERED PROFESSIONAL ENGINEER William K. Farnbach No. C49042 Exp. 9-30-12 CIVIL STATE OF CALIFORNIA

THE STATE OF CALIFORNIA OR ITS OFFICERS OR AGENTS SHALL NOT BE RESPONSIBLE FOR THE ACCURACY OR COMPLETENESS OF SCANNED COPIES OF THIS PLAN SHEET.

TO ACCOMPANY PLANS DATED 11-04-13

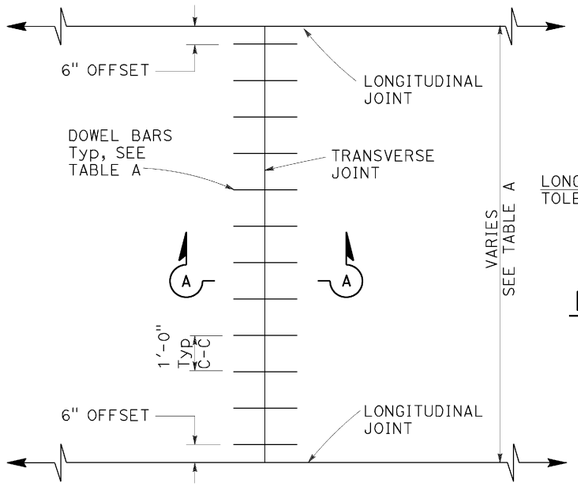

TRANSVERSE JOINT DOWEL BAR LAYOUT

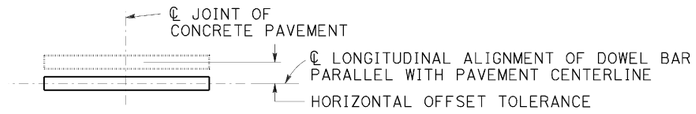

PLAN

HORIZONTAL OFFSET TOLERANCE

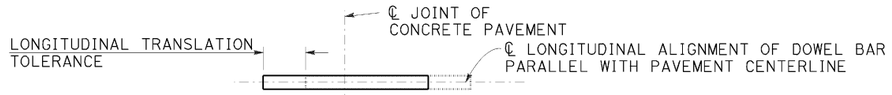

PLAN

LONGITUDINAL TRANSLATION TOLERANCE

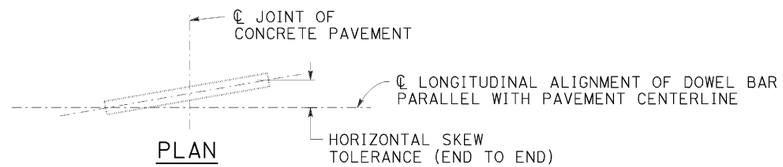

PLAN

HORIZONTAL SKEW TOLERANCE

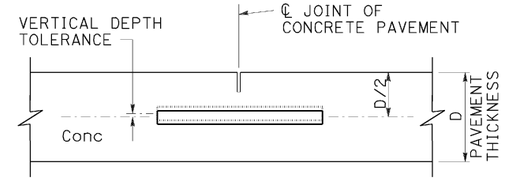

ELEVATION

VERTICAL DEPTH TOLERANCE

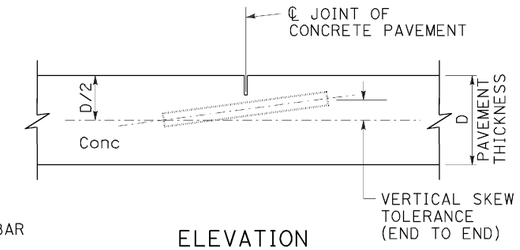

ELEVATION

VERTICAL SKEW TOLERANCE

NOTES:

1. See Standard Plan P1 for typical dowel bar placement and locations.
2. 1½" Dia dowel bars are to be used with a pavement thickness, D, equal to or greater than 0.70 feet. For pavement thickness, D, less than 0.70 feet, use 1¼" Dia dowel bars.
3. For widths not shown, see Project Plans.
4. If fresh concrete pavement is placed adjacent to existing concrete pavement, the top corner of the existing concrete pavement does not need to be rounded to the ¼" radius, as shown.
5. May also use ¾" Dia dowel bars 2'-4" ± ¼" in length. Center the length of dowel bars at the centerline of longitudinal joint.

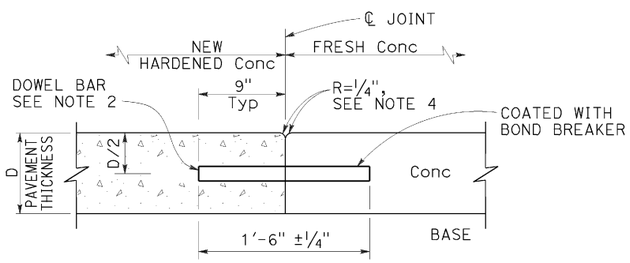

SECTION A-A

TRANSVERSE CONSTRUCTION JOINT DETAIL

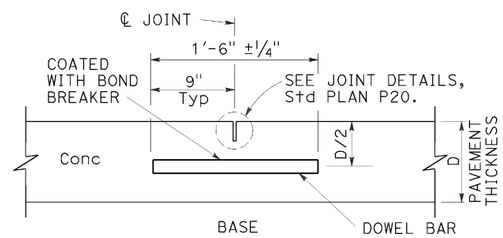

TRANSVERSE CONTRACTION JOINT

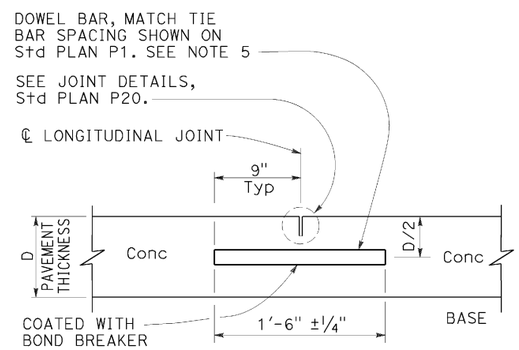

LONGITUDINAL CONTRACTION JOINT WITH DOWEL BARS

See Revised Std Plan RSP P18

TABLE A (See Note 3)

DOWEL BAR TRANSVERSE SPACING TABLE	
WIDTH BETWEEN LONGITUDINAL JOINTS	NUMBER OF DOWELS BETWEEN LONGITUDINAL JOINTS
14'-0"	14
13'-0"	13
12'-0"	12
11'-0"	11
10'-0"	10
8'-0"	8
5'-0"	5
4'-0"	4

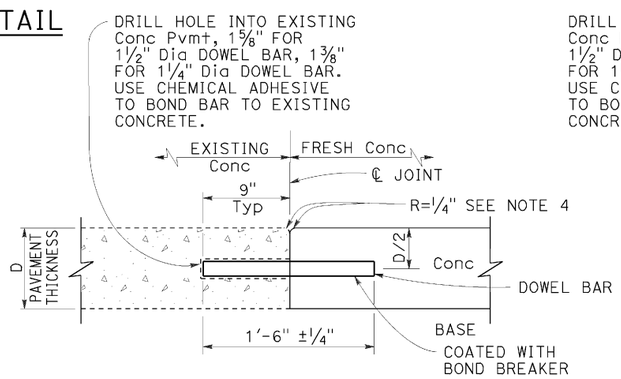

TRANSVERSE CONSTRUCTION JOINT FOR EXISTING CONCRETE PAVEMENT

Drill and bond locations

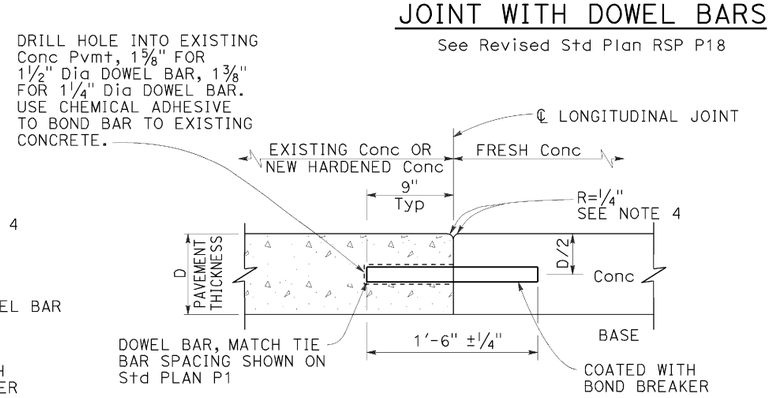

LONGITUDINAL CONSTRUCTION JOINT WITH DOWEL BARS

See Revised Std Plan RSP P18

STATE OF CALIFORNIA
DEPARTMENT OF TRANSPORTATION

CONCRETE PAVEMENT-DOWEL BAR DETAILS

NO SCALE

RSP P10 DATED APRIL 20, 2012 SUPERSEDES STANDARD PLAN P10 DATED MAY 20, 2011 - PAGE 131 OF THE STANDARD PLANS BOOK DATED 2010.

REVISED STANDARD PLAN RSP P10

2010 REVISED STANDARD PLAN RSP P10

2-22-12

Dist	COUNTY	ROUTE	POST MILES TOTAL PROJECT	SHEET No.	TOTAL SHEETS
11	SD	5	R58.1/R72.4	240	259

William K. Farnbach
REGISTERED CIVIL ENGINEER

April 20, 2012
PLANS APPROVAL DATE

REGISTERED PROFESSIONAL ENGINEER William K. Farnbach No. C49042 Exp. 9-30-12 CIVIL STATE OF CALIFORNIA

THE STATE OF CALIFORNIA OR ITS OFFICERS OR AGENTS SHALL NOT BE RESPONSIBLE FOR THE ACCURACY OR COMPLETENESS OF SCANNED COPIES OF THIS PLAN SHEET.

TO ACCOMPANY PLANS DATED 11-04-13

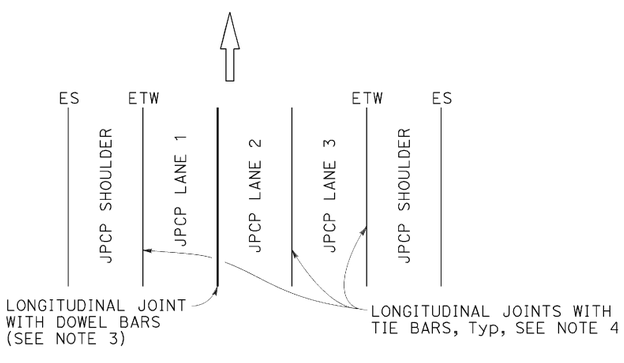

3 LANES WITH CONCRETE SHOULDERS
PLAN

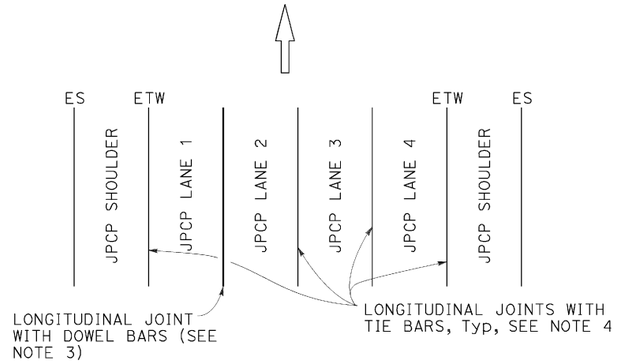

4 LANES WITH CONCRETE SHOULDERS
PLAN

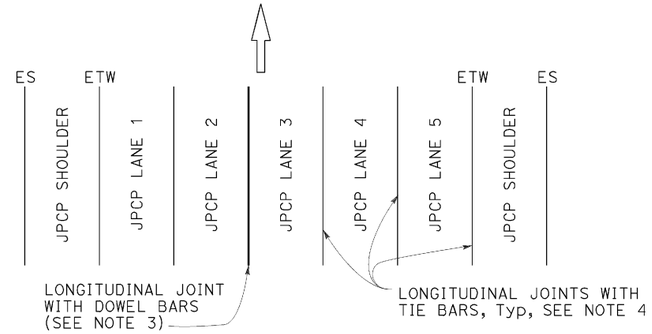

5 LANES WITH CONCRETE SHOULDERS
PLAN

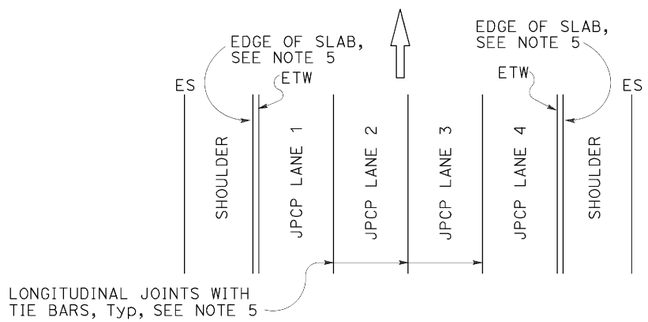

4 LANES OR LESS WITH AC SHOULDERS
PLAN

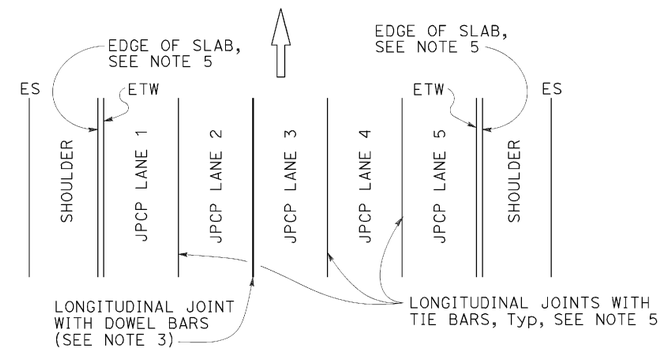

5 LANES WITH AC SHOULDERS
PLAN

NEW CONSTRUCTION

Location of Longitudinal Joints For JPCP

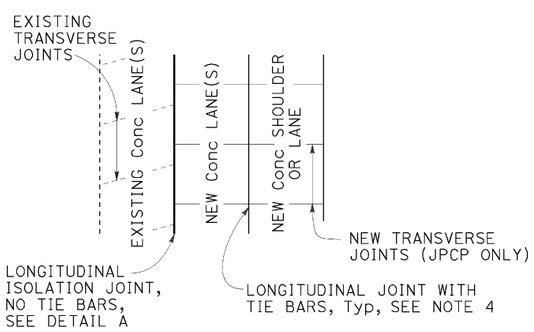

CASE 1
PLAN

Transverse Joints do not align between new and existing.

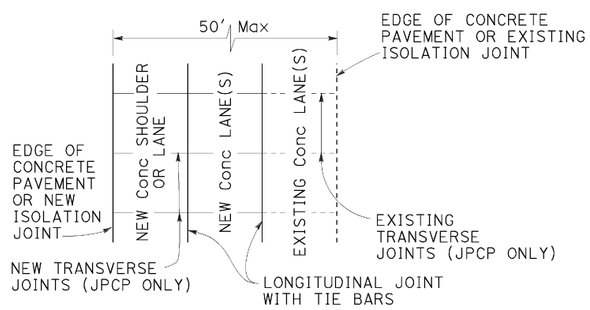

CASE 2
PLAN

Transverse Joints align between new and existing.

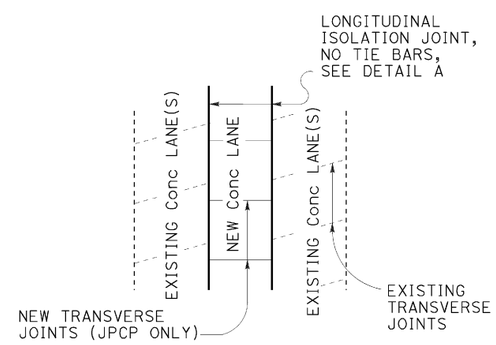

CASE 3 (INTERIOR LANE REPLACEMENT)
PLAN

Transverse Joints do not align between new and existing.

LANE/SHOULDER ADDITION OR RECONSTRUCTION

For JPCP and CRCP

NOTES:

1. Where Lean Concrete Base is not used as base material, the joint filler material used for the longitudinal isolation joint shall only extend to the bottom of the new concrete slab. See Detail A.
2. Use 5/8" ±1/16" dimension for silicone sealant.
3. See Revised Standard Plan RSP P10 for longitudinal joint with dowel bars.
4. See Standard Plan P1.
5. See Standard Plan P2.

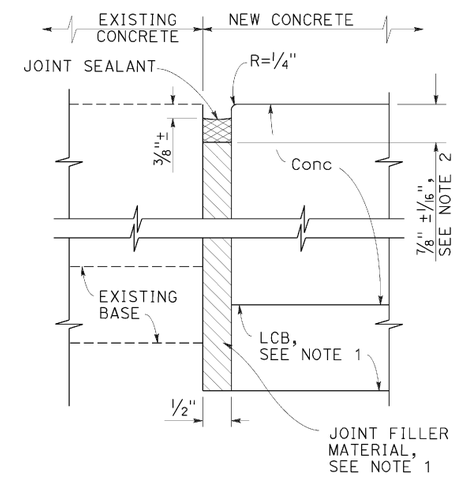

DETAIL "A"

ISOLATION JOINT

STATE OF CALIFORNIA
DEPARTMENT OF TRANSPORTATION

CONCRETE PAVEMENT-LANE SCHEMATICS AND ISOLATION JOINT DETAIL

NO SCALE

RSP P18 DATED APRIL 20, 2012 SUPERSEDES STANDARD PLAN P18 DATED MAY 20, 2011 - PAGE 135 OF THE STANDARD PLANS BOOK DATED 2010.

REVISED STANDARD PLAN RSP P18

2010 REVISED STANDARD PLAN RSP P18

2-22-12

Dist	COUNTY	ROUTE	POST MILES TOTAL PROJECT	SHEET No.	TOTAL SHEETS
11	SD	5	R58.1/R72.4	241	259

William K. Farnbach
REGISTERED CIVIL ENGINEER

April 20, 2012
PLANS APPROVAL DATE

REGISTERED PROFESSIONAL ENGINEER William K. Farnbach No. C49042 Exp. 9-30-12 CIVIL STATE OF CALIFORNIA

THE STATE OF CALIFORNIA OR ITS OFFICERS OR AGENTS SHALL NOT BE RESPONSIBLE FOR THE ACCURACY OR COMPLETENESS OF SCANNED COPIES OF THIS PLAN SHEET.

TO ACCOMPANY PLANS DATED 11-04-13

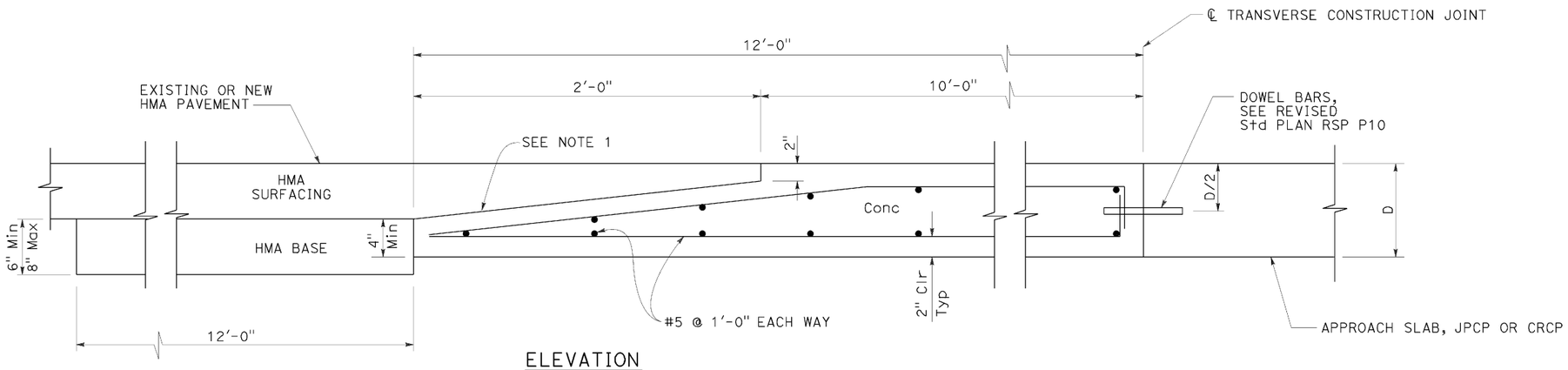

ELEVATION

CONCRETE PAVEMENT TRANSITION PANEL

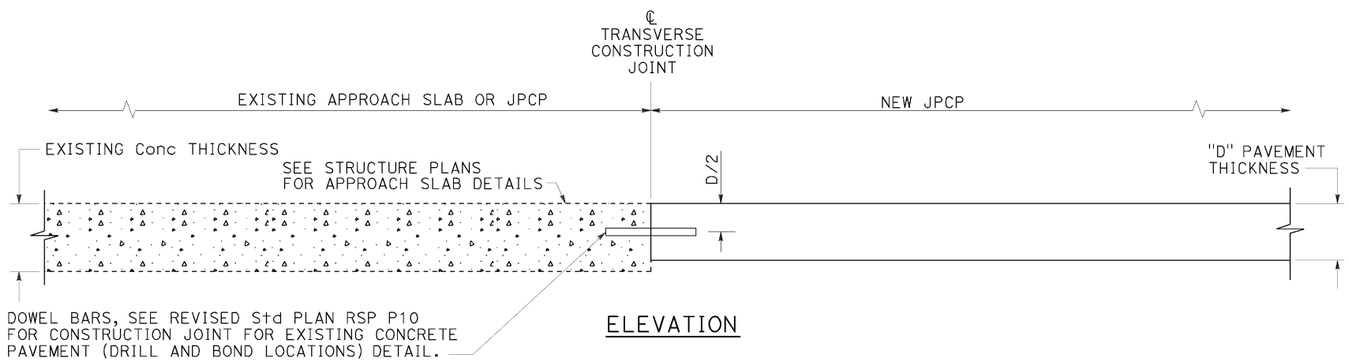

ELEVATION

TERMINAL JOINT TYPE 1

For Exist JPCP or Structure Approach Slab

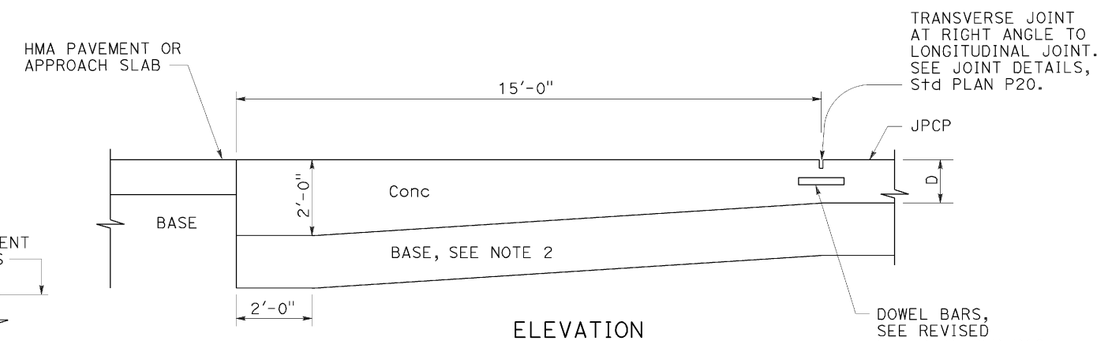

ELEVATION

PAVEMENT END ANCHOR

For HMA Pvmt or Structure Approach Slab

NOTES:

1. Heavy broom finish.
2. Maintain same base thickness as JPCP.

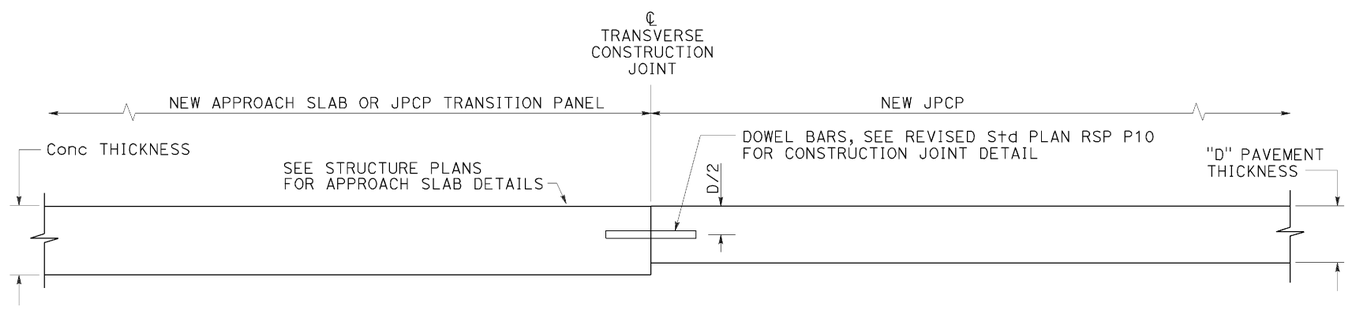

ELEVATION

TERMINAL JOINT TYPE 2

For JPCP Transition Panel or Structure Approach Slab

STATE OF CALIFORNIA
DEPARTMENT OF TRANSPORTATION

CONCRETE PAVEMENT-END PANEL PAVEMENT TRANSITIONS

NO SCALE

RSP P30 DATED APRIL 20, 2012 SUPERSEDES STANDARD PLAN P30
DATED MAY 20, 2011 - PAGE 137 OF THE STANDARD PLANS BOOK DATED 2010.

REVISED STANDARD PLAN RSP P30

2010 REVISED STANDARD PLAN RSP P30

2-22-12

TO ACCOMPANY PLANS DATED 11-04-13

Dist	COUNTY	ROUTE	POST MILES TOTAL PROJECT	SHEET No.	TOTAL SHEETS
11	SD	5	R58.1/R72.4	242	259

REGISTERED CIVIL ENGINEER

October 19, 2012
PLANS APPROVAL DATE

REGISTERED PROFESSIONAL ENGINEER Glenn DeCou No. C34547 Exp. 9-30-13 CIVIL STATE OF CALIFORNIA

THE STATE OF CALIFORNIA OR ITS OFFICERS OR AGENTS SHALL NOT BE RESPONSIBLE FOR THE ACCURACY OR COMPLETENESS OF SCANNED COPIES OF THIS PLAN SHEET.

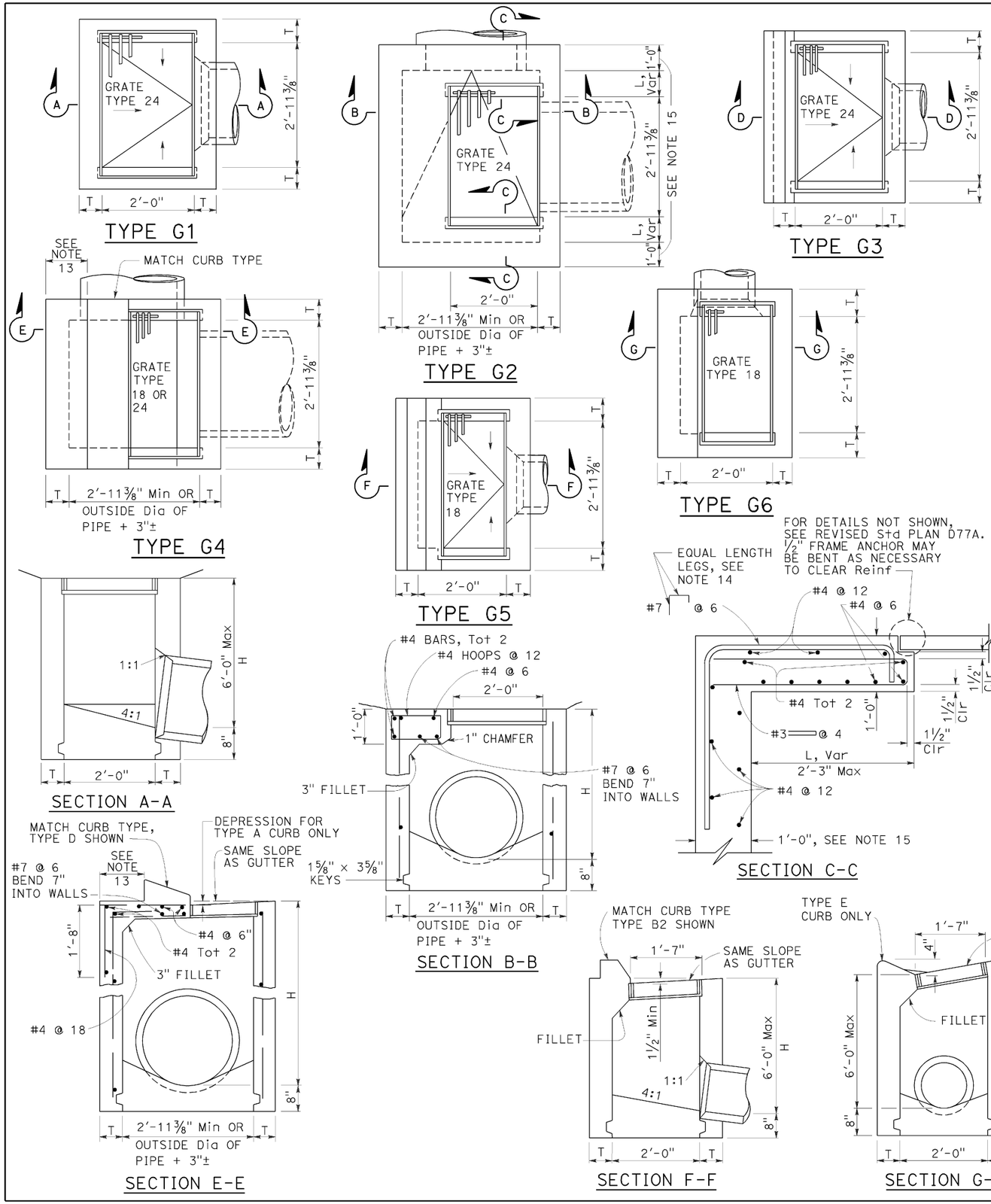

NOTES:

1. "H" is the difference in elevation between the outlet pipe flow line and the normal gutter grade line undepressed.
2. For "T" wall thickness, see Table A below.
3. Wall reinforcing not required when "H" is 8'-0" or less and the unsupported width or length is 7'-0" or less. Walls exceeding these limits shall be reinforced with #4 bars @ 1'-6" ± centers placed 1½" clear to inside of box unless otherwise shown.
4. Inlet bottom reinforcing not required. See Standard Plan D74C for alternative reinforced bottom and alternative half round bottom.
5. Steps-None required where "H" is less than 2'-6". Where "H" is 2'-6" or more, install steps with lowest rung 1'-0" above the floor and highest rung not more than 6" below top of inlet. The distance between steps shall not exceed 1'-0" and shall be uniform throughout the length of the wall. Place steps in the wall without an opening. Steps inserts may be substituted for the bar steps. Step inserts shall comply with State Industrial Safety requirements. See Standard Plan D74C for step details.
6. Details shown apply to both metal and concrete pipe.
7. Pipe(s) can be placed in any wall.
8. Curb section shall match adjacent curb.
9. Basin floors shall have wood trowel finish and a minimum slope of 12:3 from all directions toward outlet pipe.
10. Set inlet so that grate bars are parallel to direction of principal surface flow.
11. See Revised Standard Plans D77A and D77B for grate and frame details and weights of miscellaneous iron and steel.
12. See Standard Plan D78A for gutter depression details.
13. This dimenison will vary with different grates, curbs types, box width and wall thickness.
14. Bar may be rotated as necessary to clear opening. Where "L" is 6" or less, bar may be omitted.
15. Where "L" is 6" or less, wall thickness shall be as shown in Table A.
16. Cast-in-place inlets to be formed around all pipes/stubs intersecting the inlet, and concrete poured in one continuous operation. Precast inlets shall have mortared connections conforming to details for Type GCP Inlet shown on Standard Plan D75B. See Standard Specifications for mortar composition.

TABLE A

CONCRETE QUANTITIES				
TYPE	H=3'-0" TO 8'-0" (T=6")		H=8'-1" TO 20'-0" (T=8")	
	H=3'-0" (CY)	ADDITIONAL PCC PER FOOT (CY)	H=8'-1" (CY)	ADDITIONAL PCC PER FOOT (CY)
G-1	0.95	0.220	See Note A	SEE NOTE A
G-2*	1.31	0.255	3.50	0.357
G-3	1.03	0.220	See Note A	SEE NOTE A
G-4* (TYPE 24)	1.27	0.255	3.48	0.357
G-4* (TYPE 18)	1.30	0.255	3.50	0.357
G-5	1.02	0.220	SEE NOTE A	SEE NOTE A
G-6	1.04	0.220	SEE NOTE A	SEE NOTE A

TABLE BASED ON 8" FLOOR SLAB. NO DEDUCTIONS ARE TO BE MADE TO THESE QUANTITIES BECAUSE OF PIPE OPENINGS, DIFFERENT FLOOR ALTERNATIVES OR DIFFERENT CURB TYPES. * QUANTITIES FOR TYPE G-2 AND G-4 INLETS BASED ON THE MINIMUM INTERIOR DIMENSIONS.

NOTE A:

Maximum allowable height 6'-0".

STATE OF CALIFORNIA
DEPARTMENT OF TRANSPORTATION

DRAINAGE INLETS

NO SCALE

RSP D73 DATED OCTOBER 19, 2012 SUPERSEDES STANDARD PLAN D73 DATED MAY 20, 2011 - PAGE 156 OF THE STANDARD PLANS BOOK DATED 2010.

REVISED STANDARD PLAN RSP D73

2010 REVISED STANDARD PLAN RSP D73

7-19-12

Dist	COUNTY	ROUTE	POST MILES TOTAL PROJECT	SHEET No.	TOTAL SHEETS
11	SD	5	R58.1/R72.4	243	259

Raymond Don Tsztoo
REGISTERED CIVIL ENGINEER

April 19, 2013
PLANS APPROVAL DATE

REGISTERED PROFESSIONAL ENGINEER Raymond Don Tsztoo No. C37332 Exp. 6-30-14 CIVIL STATE OF CALIFORNIA

THE STATE OF CALIFORNIA OR ITS OFFICERS OR AGENTS SHALL NOT BE RESPONSIBLE FOR THE ACCURACY OR COMPLETENESS OF SCANNED COPIES OF THIS PLAN SHEET.

TO ACCOMPANY PLANS DATED 11-04-13

2010 REVISED STANDARD PLAN RSP D77A

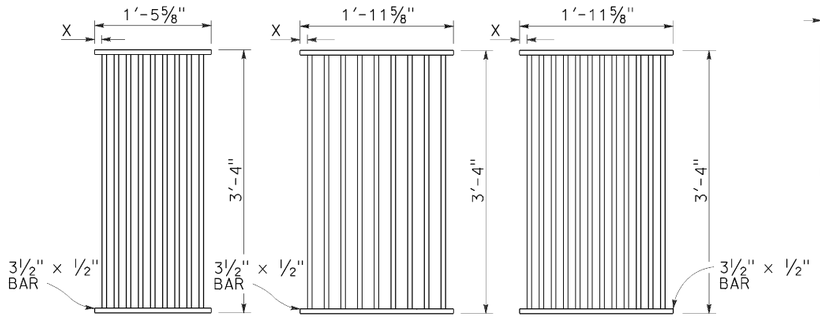

TYPE 18-9

1⅜" Clear spacing. Use within the roadbed on highways where bicycles and pedestrians are excluded.

TYPE 24-9

2" Clear spacing. Use in locations off the roadbed on all types of highways.

TYPE 24-12

1⅜" Clear spacing. Use within the roadbed on highways where bicycles and pedestrians are excluded.

RECTANGULAR GRATE DETAILS

(See table below)

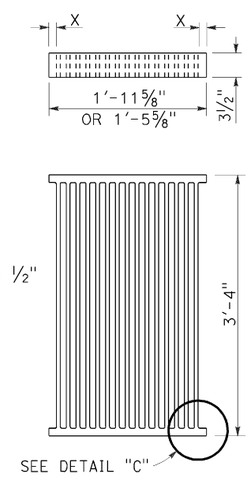

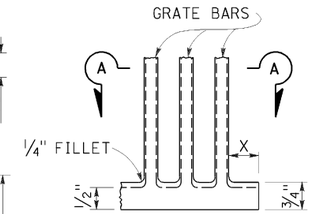

DETAIL "C"

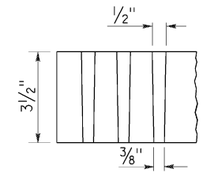

SECTION A-A

ALTERNATIVE CAST DUCTILE IRON GRATE OR CAST CARBON STEEL GRATE

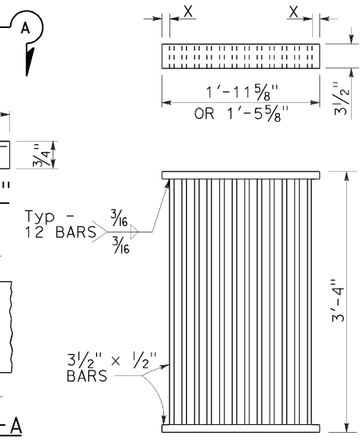

ALTERNATIVE WELDED GRATE

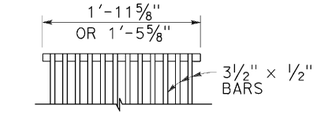

CAST END BLOCK

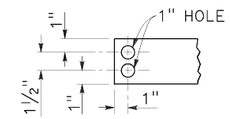

END OF BAR

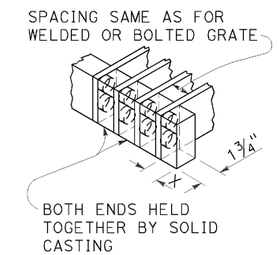

ALTERNATIVE CAST DUCTILE IRON OR CAST CARBON STEEL END BLOCK GRATE

NOTES:

1. Grate type numbers refer to approximate width of grate in inches and number of bars, respectively.
2. Contractor has the option of using cast ductile iron, cast carbon steel, welded, bolted, or cast end block grate.
3. Rounded top of bars optional on all grates.
4. Pipe inlets with a grate shall be placed so that bars parallel direction of principle surface flow.
5. Complete joint penetration butt welds may be substituted for the fillet welds on all anchors.
6. Standard square, hexagon, round or equivalent headed anchors may be substituted for the right angle hooks on the anchors shown on this plan.
7. Grate and frame weights are based on welded grates (weights of face angles, steps, protection bars, etc. are not included).
8. Connect chain to grate and frame only at locations shown on the plans. When chain is required, do not use cast ductile iron grates.

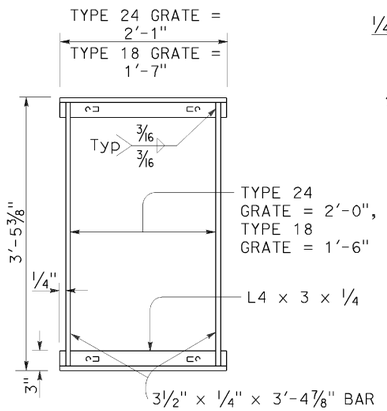

TYPICAL FRAME

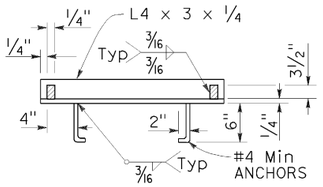

CROSS SECTION

(Thru frame)

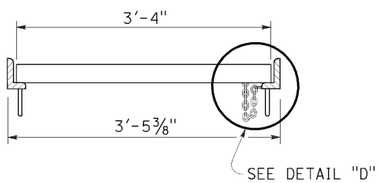

LONGITUDINAL SECTION

(Thru frame and grate)

RECTANGULAR FRAME DETAILS

(For all rectangular grates)

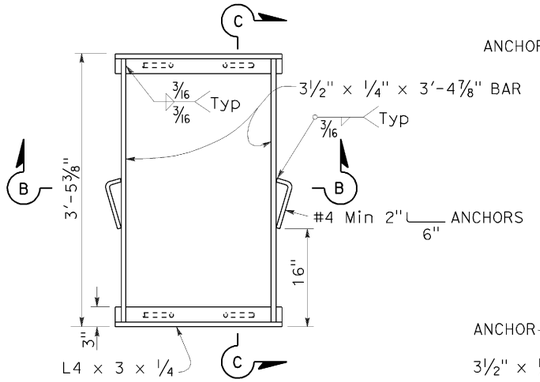

TYPICAL FRAME

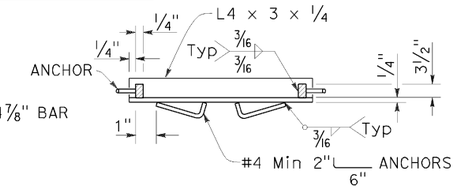

SECTION B-B

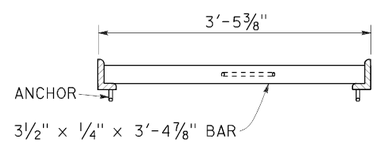

SECTION C-C

ALTERNATIVE ANCHOR FOR RECTANGULAR FRAME

(For details not shown, See Rectangular Frame Details)

INLET TYPE	GRATE TYPE	No. OF GRATES	WEIGHT LB
GDO	24-12	2	634
GOL-7	24-12	1	326
GOL-10	24-12	1	326
GO,G1,G2,G3,G4 (TYPE 24)	24-9	1	263
	24-12	1	326
G4 (TYPE 18),G5,G6	18-9	1	249
GT1	18-9	2	498
GT2	18-9	2	498
GT3	24-12	2	652
GT4	24-12	2	652
TRASH RACK			22
GRATE CHAIN			3

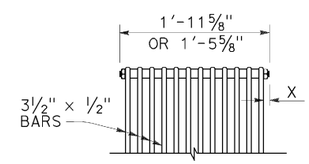

BOLTED END BLOCK

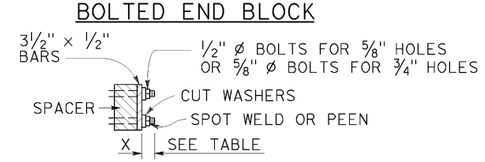

BOLTING DETAIL

ALTERNATIVE BOLTED GRATE

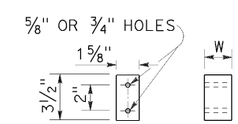

BAR SPACER

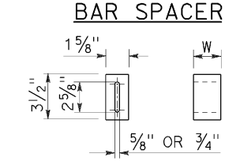

ALTERNATIVE SPACER

W = 1⅜" or 2"

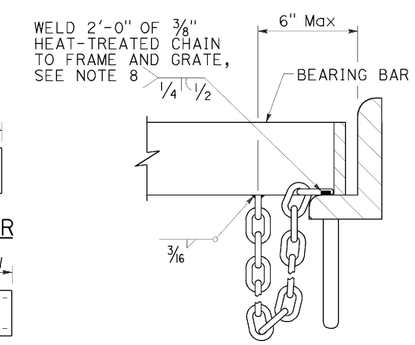

DETAIL "D"

(Steel grates only)

GRATE BAR SPACING TABLE

TYPE	No. OF BARS	CLEAR BAR SPACING	X
18-9	9	1⅜"	1 1/16"
24-9	9	2"	1 9/16"
24-12	12	1⅜"	1¼"

INLET TYPE	COVER TYPE	WEIGHT LB
OS	PLATE	174
OL-7	PLATE	170
OL-10	PLATE	170
OL-14	PLATE	170
OL-21	PLATE	170
OCP	PLATE	112
OCPI	PLATE	112
OCPI	REDWOOD	42
OMP	PLATE	177
OMPI	PLATE	177

BASIS FOR Misc IRON & STEEL FINAL PAY WEIGHTS FOR DRAINAGE INLETS

(See Note 7)

STATE OF CALIFORNIA
DEPARTMENT OF TRANSPORTATION

GRATE DETAILS No. 1

NO SCALE

RSP D77A DATED APRIL 19, 2013 SUPERSEDES RSP D77A DATED JULY 20, 2012 AND STANDARD PLAN D77A DATED MAY 20, 2011 - PAGE 164 OF THE STANDARD PLANS BOOK DATED 2010.

REVISED STANDARD PLAN RSP D77A

4-4-13

Dist	COUNTY	ROUTE	POST MILES TOTAL PROJECT	SHEET No.	TOTAL SHEETS
11	SD	5	R58.1/R72.4	244	259

REGISTERED CIVIL ENGINEER

April 19, 2013
PLANS APPROVAL DATE

Raymond Don Tsztoo
No. C37332
Exp. 6-30-14
CIVIL
STATE OF CALIFORNIA
REGISTERED PROFESSIONAL ENGINEER

THE STATE OF CALIFORNIA OR ITS OFFICERS OR AGENTS SHALL NOT BE RESPONSIBLE FOR THE ACCURACY OR COMPLETENESS OF SCANNED COPIES OF THIS PLAN SHEET.

TO ACCOMPANY PLANS DATED 11-04-13

2010 REVISED STANDARD PLAN RSP D77B

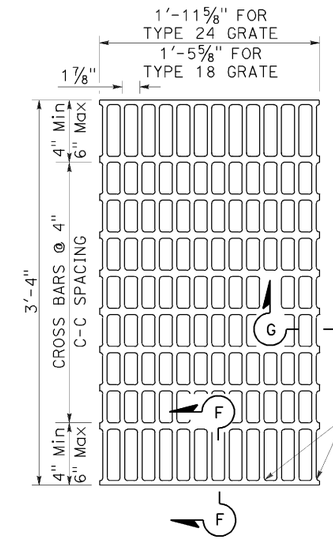

NOTES:

Bearing bars to be 3½" × ¼" bars on 1⅞" centers.

⅜"± ø Cross bars may be fillet welded, resistance welded or electroforged to bearing bars.

Weight of Type 24 grate = 141 LBS.

Weight of Type 18 grate = 107 LBS. (Type 24 grate shown).

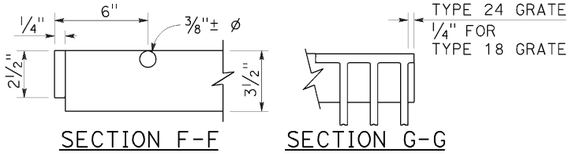

SECTION F-F SECTION G-G

TYPE 18-10 AND 24-13 GRATE

(Welded Steel)

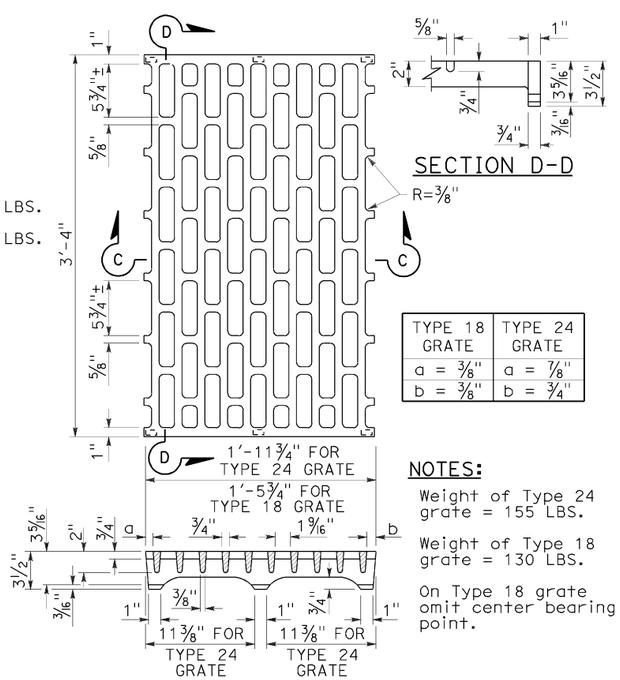

SECTION D-D

TYPE 18 GRATE	TYPE 24 GRATE
a = ⅜"	a = ⅞"
b = ⅜"	b = ¾"

NOTES:

Weight of Type 24 grate = 155 LBS.

Weight of Type 18 grate = 130 LBS.

On Type 18 grate omit center bearing point.

SECTION C-C

TYPE 18-8C AND 24-10C GRATE

(Cast ductile iron)

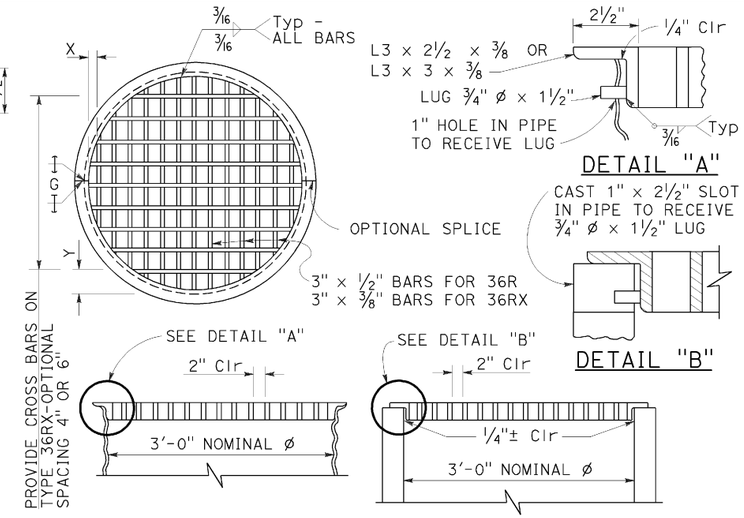

DETAIL "A"

DETAIL "B"

TYPE 36R AND 36RX GRATE DETAILS

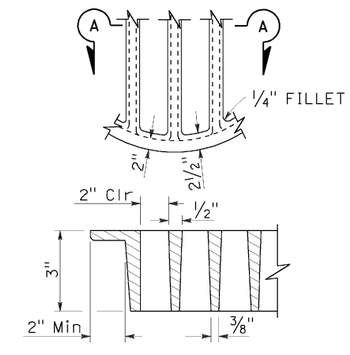

SECTION A-A

ALTERNATIVE CAST DUCTILE IRON GRATE OR CAST CARBON STEEL GRATE TYPE 36R AND 36RX

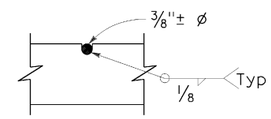

⅜"± ø Cross bars may be fillet welded, resistance welded or electroforged to bearing bars.

CROSS BAR DETAIL TYPE 36RX GRATE (WELDED STEEL)

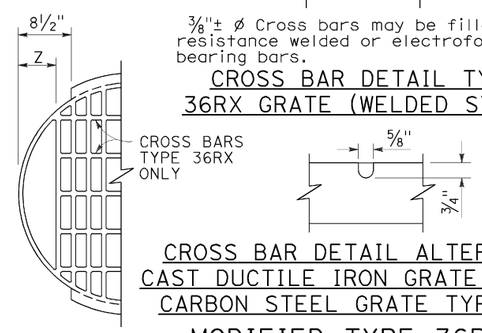

CROSS BAR DETAIL ALTERNATIVE CAST DUCTILE IRON GRATE OR CAST CARBON STEEL GRATE TYPE 36RX

MODIFIED TYPE 36R AND 36RX GRATE FOR ODI INLET

BASIS FOR Misc IRON AND STEEL FINAL PAY WEIGHTS FOR DRAINAGE INLETS

INLET TYPE	GRATE TYPE	No. OF GRATES	WEIGHT LB
GDO (SEE NOTE 4)	24-10C	2	391
	24-10S	2	456
	24-12X	2	473
	24-13	2	374
GO,GOL,G1,G2, G3,G4 (TYPE 24)	24-10C	1	202
	24-10S	1	229
	24-12X	1	239
	24-13	1	188
G4 (TYPE 18) G5,G6	18-8S	1	187
	18-9X	1	187
	18-10	1	149
GT1,GT2	18-8S	2	374
	18-9X	2	374
	18-10	2	298
GT3,GT4	24-10C	2	404
	24-10S	2	458
	24-12X	2	478
	24-13	2	376
ODI	36RX (Mod)	1	196
GMP,GCP,GCPI	36RX	1	215
ODI	36R (Mod)	1	220
GMP,GCP,GCPI	36R	1	236
TRASH RACK			22
GRATE CHAIN			3

NOTES:

1. When alternative grates are allowed - Final pay based on alternative with the lesser weight.
2. Use frame shown on Standard Plan D74A, D74B or RSP D77A as appropriate.
3. When Type 24-10S, 24-12X or 24-13 grates are used with GDO Inlets, a ¼" × 3½" × 3'-4⅞" steel bar shall be welded across the center of inlet frame to separate the individual grates.
4. See Revised Standard Plan RSP D77A for connecting chain to welded grate and frame. When chain is required, do not use cast ductile iron grate.

GRATE BAR SPACING TABLE

TYPE	No. OF BARS	CLEAR BAR SPACING	X	Y 4" SPACING	Y 6" SPACING	Z
36R	13	2"	2⅛"	-	-	-
36RX (STEEL)	15	2"	9/16"	3¾"	5¾"	-
36RX (CAST)	13	2"	2⅛"	3¾"	5¾"	-
36R Mod	12	2"	2⅛"	-	-	5"
36RX Mod (STEEL)	13	2"	9/16"	3¾"	5¾"	5 11/16"
36RX Mod (CAST)	12	2"	2⅛"	3¾"	5¾"	5"

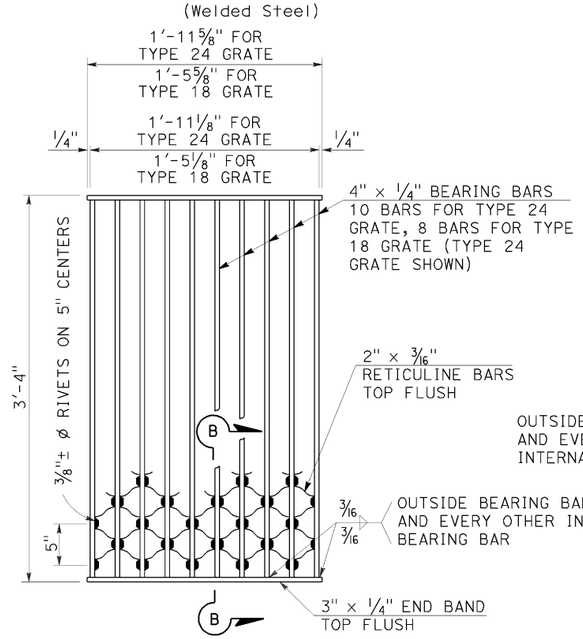

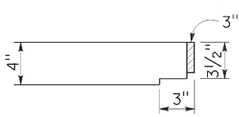

NOTES:

Weight of Type 24 grate = 182 LBS.
Weight of Type 18 grate = 145 LBS.

SECTION B-B

TYPE 18-8S AND 24-10S GRATE

(Welded Steel) Reticuline type

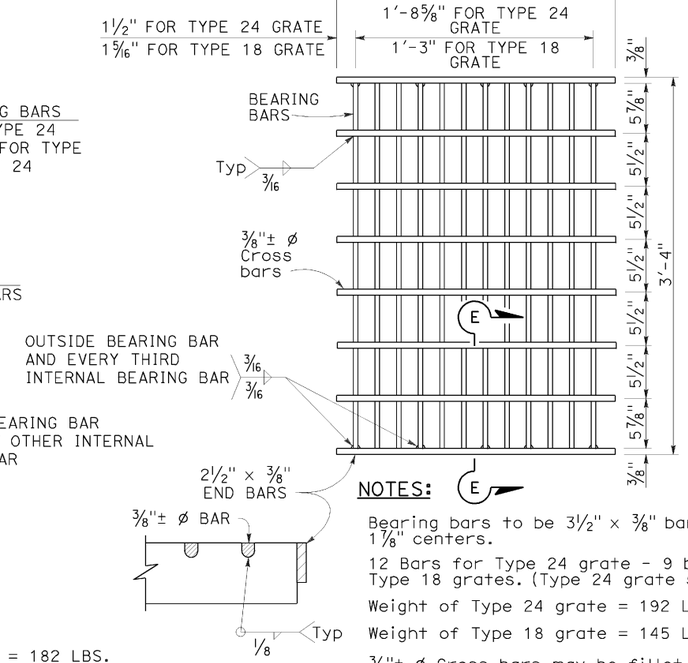

SECTION E-E

NOTES:

Bearing bars to be 3½" × ⅜" bars on 1⅞" centers.

12 Bars for Type 24 grate - 9 bars for Type 18 grates. (Type 24 grate shown).

Weight of Type 24 grate = 192 LBS.

Weight of Type 18 grate = 145 LBS.

⅜"± ø Cross bars may be fillet welded, resistance welded or electroforged to bearing bars.

TYPE 18-9X AND 24-12X GRATE

(Welded Steel)

STATE OF CALIFORNIA
DEPARTMENT OF TRANSPORTATION

GRATE DETAILS No. 2

NO SCALE

RSP D77B DATED APRIL 19, 2013 SUPERSEDES RSP D77B DATED JULY 20, 2012 AND STANDARD PLAN D77B DATED MAY 20, 2011 - PAGE 165 OF THE STANDARD PLANS BOOK DATED 2010.

REVISED STANDARD PLAN RSP D77B

4-4-13

Dist	COUNTY	ROUTE	POST MILES TOTAL PROJECT	SHEET No.	TOTAL SHEETS
11	SD	5	R58.1/R72.4	245	259

REGISTERED CIVIL ENGINEER

April 19, 2013
PLANS APPROVAL DATE

REGISTERED PROFESSIONAL ENGINEER
Gurinderpal Bhullar
No. C48815
Exp. 9-30-14
CIVIL
STATE OF CALIFORNIA

THE STATE OF CALIFORNIA OR ITS OFFICERS OR AGENTS SHALL NOT BE RESPONSIBLE FOR THE ACCURACY OR COMPLETENESS OF SCANNED COPIES OF THIS PLAN SHEET.

TO ACCOMPANY PLANS DATED 11-04-13

2010 REVISED STANDARD PLAN RSP T9

TABLE 1

TAPER LENGTH CRITERIA AND CHANNELIZING DEVICE SPACING

SPEED (S)	MINIMUM TAPER LENGTH * FOR WIDTH OF OFFSET 12 FEET (W)				MAXIMUM CHANNELIZING DEVICE SPACING		
					X	Y	Z **
	TANGENT 2L	MERGING L	SHIFTING L/2	SHOULDER L/3	TAPER	TANGENT	CONFLICT
mph	ft	ft	ft	ft	ft	ft	ft
20	160	80	40	27	20	40	10
25	250	125	63	42	25	50	12
30	360	180	90	60	30	60	15
35	490	245	123	82	35	70	17
40	640	320	160	107	40	80	20
45	1080	540	270	180	45	90	22
50	1200	600	300	200	50	100	25
55	1320	660	330	220	55	110	27
60	1440	720	360	240	60	120	30
65	1560	780	390	260	65	130	32
70	1680	840	420	280	70	140	35

* - For other offsets, use the following merging taper length formula for L:
For speed of 40 mph or less, $L = WS^2/60$
For speed of 45 mph or more, $L = WS$

Where: L = Taper length in feet
W = Width of offset in feet
S = Posted speed limit, off-peak 85th-percentile speed prior to work starting, or the anticipated operating speed in mph

** - Use for taper and tangent sections where there are no pavement markings or where there is a conflict between existing pavement markings and channelizers (CA).

TABLE 2

LONGITUDINAL BUFFER SPACE AND FLAGGER STATION SPACING

SPEED *	Min D **	DOWNGRADE Min D ***		
		-3%	-6%	-9%
mph	ft	ft	ft	ft
20	115	116	120	126
25	155	158	165	173
30	200	205	215	227
35	250	257	271	287
40	305	315	333	354
45	360	378	400	427
50	425	446	474	507
55	495	520	553	593
60	570	598	638	686
65	645	682	728	785
70	730	771	825	891

* - Speed is posted speed limit, off-peak 85th-percentile speed prior to work starting, or the anticipated operating speed in mph

** - Longitudinal buffer space or flagger station spacing

*** - Use on sustained downgrade steeper than -3 percent and longer than 1 mile.

TABLE 3

ADVANCE WARNING SIGN SPACING

ROAD TYPE	DISTANCE BETWEEN SIGNS *		
	A	B	C
	ft	ft	ft
URBAN - 25 mph OR LESS	100	100	100
URBAN - MORE THAN 25 mph TO 40 mph	250	250	250
URBAN - MORE THAN 40 mph	350	350	350
RURAL	500	500	500
EXPRESSWAY / FREEWAY	1000	1500	2640

* - The distances are approximate, are intended for guidance purposes only, and should be applied with engineering judgment. These distances should be adjusted by the Engineer for field conditions, if necessary, by increasing or decreasing the recommmended distances.

STATE OF CALIFORNIA
DEPARTMENT OF TRANSPORTATION

TRAFFIC CONTROL SYSTEM FOR LANE CLOSURE ON FREEWAYS AND EXPRESSWAYS

NO SCALE

RSP T9 DATED APRIL 19, 2013 SUPPLEMENTS THE STANDARD PLANS BOOK DATED 2010.

REVISED STANDARD PLAN RSP T9

1-23-13

TO ACCOMPANY PLANS DATED 11-04-13

Dist	COUNTY	ROUTE	POST MILES TOTAL PROJECT	SHEET No.	TOTAL SHEETS
11	SD	5	R58.1/R72.4	246	259

REGISTERED CIVIL ENGINEER

April 19, 2013
PLANS APPROVAL DATE

REGISTERED PROFESSIONAL ENGINEER Gurinderpal Bhullar No. C48815 Exp. 9-30-14 CIVIL STATE OF CALIFORNIA

THE STATE OF CALIFORNIA OR ITS OFFICERS OR AGENTS SHALL NOT BE RESPONSIBLE FOR THE ACCURACY OR COMPLETENESS OF SCANNED COPIES OF THIS PLAN SHEET.

NOTES:

See Revised Standard Plan RSP T9 for tables.

Use cone spacing X for taper segment, Y for tangent segment or Z for conflict situations, as approriate, per Table 1, unless X, Y, or Z cone spacing is shown on this sheet.

Unless otherwise specified in the special provisions, all temporary warning signs shall have black legend on fluorescent orange background.

California codes are designated by (CA). Otherwise, Federal (MUTCD) codes are shown.

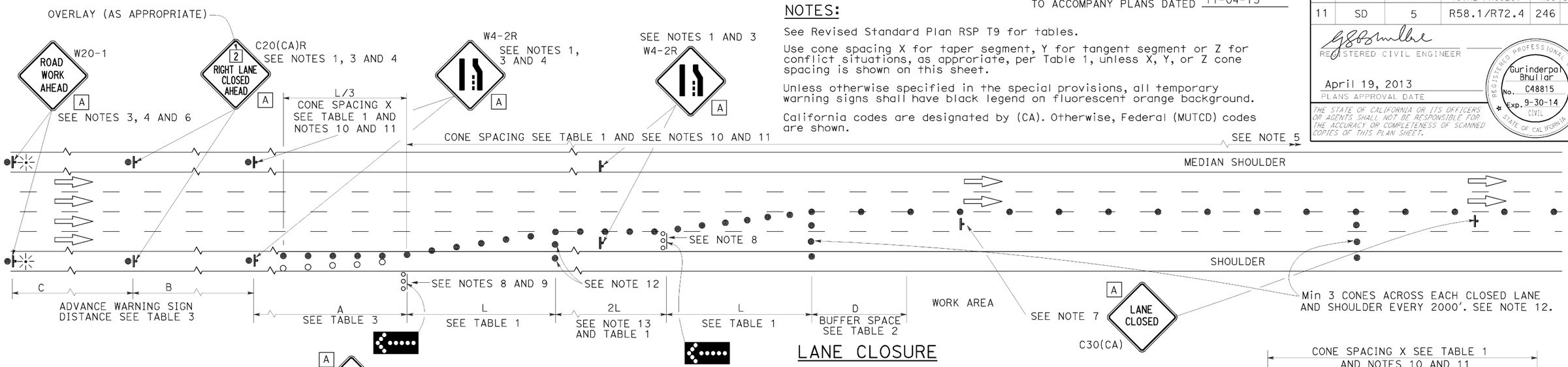

LANE CLOSURE

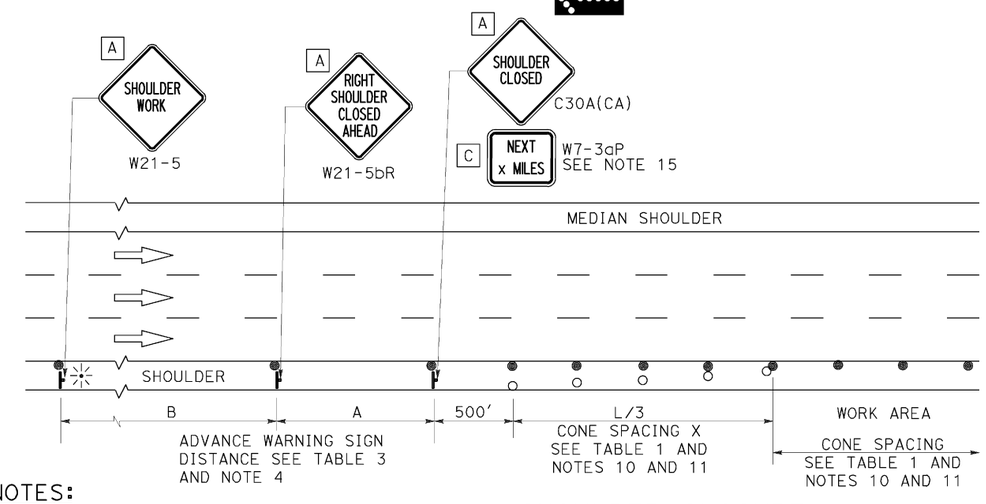

SHOULDER CLOSURE

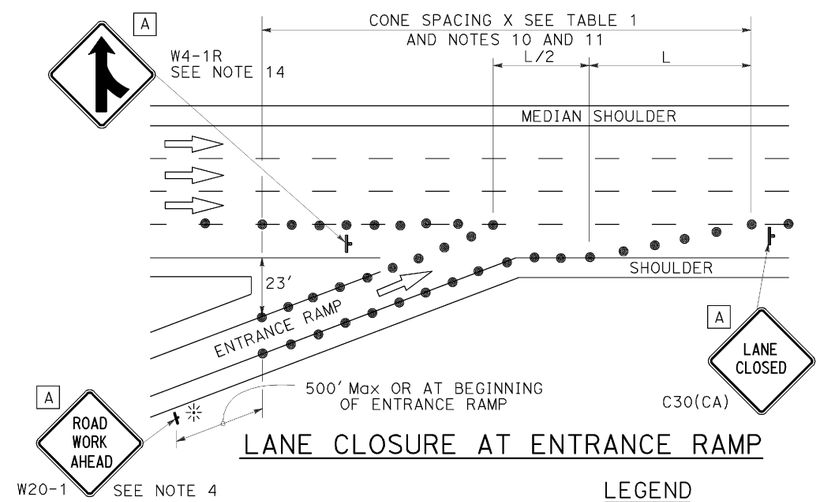

LANE CLOSURE AT ENTRANCE RAMP

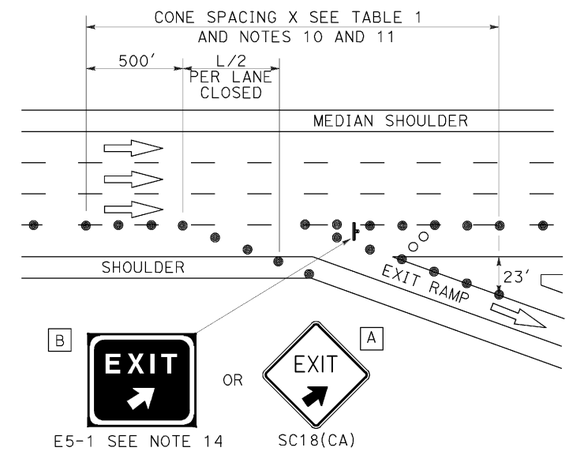

LANE CLOSURE AT EXIT RAMP

NOTES:

1. Median lane closures shall conform to the details as shown except that C20(CA)L and W4-2L signs shall be used.
2. At least one person shall be assigned to provide full time maintenance of traffic control devices for lane closures.
3. Duplicate sign installations are not required:
   a) On opposite shoulder if at least one-half of the available lanes remain open to traffic.
   b) In the median if the width of the median shoulder is less than 8' and the outside lanes are to be closed.
4. Each advance warning sign on each side of the roadway shall be equipped with at least two flags for daytime closure. Each flag shall be at least 16" x 16" in size and shall be orange or fluorescent red-orange in color. Flashing beacons shall be placed at the locations indicated for lane closure during hours of darkness.
5. A G20-2 "END ROAD WORK" sign, with minimum size of 48" x 24" as appropriate, shall be placed at the end of the lane closure unless the end of work area is obvious or ends within a larger project's limits.
6. If the W20-1 sign would follow within 2000' of a stationary W20-1 or G20-1 "ROAD WORK NEXT _____ MILES", use a C20(CA) sign for the first advance warning sign.
7. Place a C30(CA) sign every 2000' throughout length of lane closure.
8. One flashing arrow sign for each lane closed. The flashing arrow signs shall be Type I.
9. A minimum 1500' of sight distance shall be provided where possible for vehicles approaching the first flashing arrow sign. Lane closures shall not begin at top of crest vertical curve or on a horizontal curve.
10. All cones used for lane closures during the hours of darkness shall be fitted with retroreflective bands (or sleeves) as specified in the specifications.
11. Portable delineators, placed at one-half the spacing indicated for traffic cones may be used instead of cones for daytime closures only.
12. Unless otherwise specified in the special provisions, a minimum of 3 cones shall be placed transversely across each closed lane and shoulder at each location where a taper across a traffic lane ends and every 2000' as shown on the "Lane Closure" detail. Two Type II barricades may be used instead of the 3 cones. The transverse alignment of the cones or barricades on the closed shoulder may be shifted from the transverse alignment to provide access to the work.
13. Unless otherwise specified in the special provisions, the 2L tangent shown along lane lines shall be used between the L tapers required for each closed traffic lane.
14. Unless otherwise specified in the special provisions, the E5-1 or SC18(CA) and W4-1 signs shall be used as shown.
15. A W7-3aP "NEXT____ MILES" plaque must be used if theshoulder closure extends beyond the distance that can be perceived by road users.

LEGEND

- TRAFFIC CONE
- TRAFFIC CONE (OPTIONAL TAPER)
- TEMPORARY TRAFFIC CONTROL SIGN
- FLASHING ARROW SIGN (FAS)
- FAS SUPPORT OR TRAILER
- PORTABLE FLASHING BEACON

SIGN PANEL SIZE (Min)

A	48" x 48"
B	72" x 60"
C	36" x 30"

STATE OF CALIFORNIA
DEPARTMENT OF TRANSPORTATION

TRAFFIC CONTROL SYSTEM FOR LANE CLOSURE ON FREEWAYS AND EXPRESSWAYS

NO SCALE

RSP T10 DATED APRIL 19, 2013 SUPERSEDES STANDARD PLAN T10 DATED MAY 20, 2011 - PAGE 237 OF THE STANDARD PLANS BOOK DATED 2010.

REVISED STANDARD PLAN RSP T10

2010 REVISED STANDARD PLAN RSP T10

12-18-12

TO ACCOMPANY PLANS DATED 11-04-13

Dist	COUNTY	ROUTE	POST MILES TOTAL PROJECT	SHEET No.	TOTAL SHEETS
11	SD	5	R58.1/R72.4	247	259

REGISTERED CIVIL ENGINEER

April 19, 2013
PLANS APPROVAL DATE

REGISTERED PROFESSIONAL ENGINEER Gurinderpal Bhullar No. C48815 Exp. 9-30-14 CIVIL STATE OF CALIFORNIA

THE STATE OF CALIFORNIA OR ITS OFFICERS OR AGENTS SHALL NOT BE RESPONSIBLE FOR THE ACCURACY OR COMPLETENESS OF SCANNED COPIES OF THIS PLAN SHEET.

NOTES: See Revised Standard Plan RSP T9 for tables.

Use cone spacing X for taper segment, Y for tangent segment or Z for conflict situations, as approriate, per Table 1, unless X, Y, or Z cone spacing is shown on this sheet.

Unless otherwise specified in the special provisions, all temporary warning signs shall have black legend on fluorescent orange background.

California codes are designated by (CA). Otherwise, Federal (MUTCD) codes are shown.

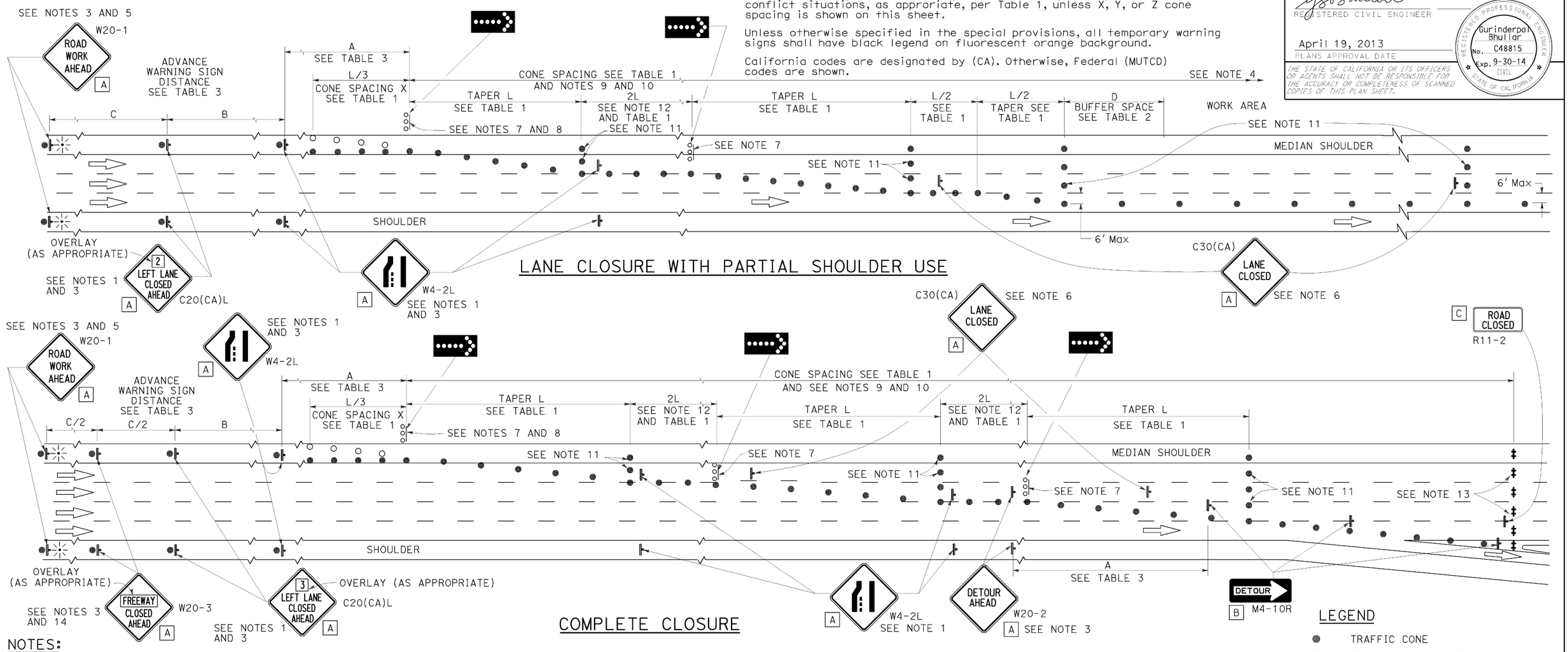

LANE CLOSURE WITH PARTIAL SHOULDER USE

COMPLETE CLOSURE

NOTES:

1. Lane closures on the right side using partial median shoulder as a traffic lane shall conform to the details as shown except that C20(CA)R and W4-2R signs shall be used.
2. At least one person shall be assigned to provide full time maintenance of traffic control devices for lane closures.
3. Each advance warning sign on each side of the roadway shall be equipped with at least two flags for daytime closure. Each flag shall be at least 16" X 16" in size and shall be orange or fluorescent red-orange in color. Flashing beacons shall be placed at the locations indicated for lane closure during hours of darkness.
4. A G20-2 "END ROAD WORK" sign, with minimum size of 48" x 24" as appropriate, shall be placed at the end of the lane closure unless the end of work area is obvious or ends within a larger project's limits.
5. If the W20-1 sign would follow within 2000' of a stationary W20-1 or G20-1 "ROAD WORK NEXT ___ MILES", use a C20(CA) sign for the first advance warning sign.
6. Place a C30(CA) sign every 2000' throughout length of lane closure.
7. One flashing arrow sign for each lane closed. The flashing arrow signs shall be Type I.
8. A minimum 1500' of sight distance shall be provided where possible for vehicles approaching the first flashing arrow sign. Lane closures shall not begin at the top of crest vertical curve or on a horizontal curve.
9. All cones used for lane closures during the hours of darkness shall be fitted with retroreflective bands (or sleeves) as specified in the specifications.
10. Portable delineators, placed at one-half the spacing indicated for traffic cones, may be used instead of cones for daytime closures only.
11. Unless otherwise specified in the special provisions, a minimum of 3 cones shall be placed transversely across each closed lane and shoulder at each location where a taper across a traffic lane ends and every 2000' as shown on the "Lane Closure With Partial Shoulder Use" detail. Two Type II barricades may be used instead of the 3 cones. The transverse alignment of the cones or barricades on the closed shoulder may be shifted from the transverse alignment to provide access to the work.
12. Unless otherwise specified in the special provisions, the 2L tangent shown along lane lines shall be used between the L tapers required for each closed traffic lane.
13. A minimum of Two Type II or III barricades shall be placed across each closed lane and shoulder at the location shown and every 2000' within the complete closure area. Within the complete closure area, the transverse alignment of the barricades on the closed shoulder may be shifted from the transverse alignment to provide access to the work.
14. When specified in the special provisions, a W20-2 "DETOUR AHEAD" sign is to be used in place of the W20-3 "FREEWAY CLOSED AHEAD" sign.

SIGN PANEL SIZE (Min)

A	48" x 48"
B	48" x 18"
C	48" x 30"

LEGEND

- TRAFFIC CONE
- TRAFFIC CONE (OPTIONAL TAPER)
- TEMPORARY TRAFFIC CONTROL SIGN
- FLASHING ARROW SIGN (FAS)
- FAS SUPPORT OR TRAILER
- PORTABLE FLASHING BEACON

STATE OF CALIFORNIA
DEPARTMENT OF TRANSPORTATION

TRAFFIC CONTROL SYSTEM FOR LANE CLOSURES ON FREEWAYS AND EXPRESSWAYS

NO SCALE

RSP T10A DATED APRIL 19, 2013 SUPERSEDES STANDARD PLAN T10A DATED MAY 20, 2011 - PAGE 238 OF THE STANDARD PLANS BOOK DATED 2010.

REVISED STANDARD PLAN RSP T10A

2010 REVISED STANDARD PLAN RSP T10A

12-18-12

Dist	COUNTY	ROUTE	POST MILES TOTAL PROJECT	SHEET No.	TOTAL SHEETS
11	SD	5	R58.1/R72.4	248	259

REGISTERED CIVIL ENGINEER

April 19, 2013
PLANS APPROVAL DATE

REGISTERED PROFESSIONAL ENGINEER Gurinderpal Bhullar No. C48815 Exp. 9-30-14 CIVIL STATE OF CALIFORNIA

THE STATE OF CALIFORNIA OR ITS OFFICERS OR AGENTS SHALL NOT BE RESPONSIBLE FOR THE ACCURACY OR COMPLETENESS OF SCANNED COPIES OF THIS PLAN SHEET.

TO ACCOMPANY PLANS DATED 11-04-13

2010 REVISED STANDARD PLAN RSP T13

NOTES:

See Revised Standard Plan RSP T9 for tables.

Use cone spacing X for taper segment, Y for tangent segment or Z for conflict situations, as approriate, per Table 1, unless X, Y, or Z cone spacing is shown on this sheet.

Unless otherwise specified in the special provisions, all temporary warning signs shall have black legend on fluorescent orange background.

California codes are designated by (CA). Otherwise, Federal (MUTCD) codes are shown.

TYPICAL LANE CLOSURE WITH REVERSIBLE CONTROL

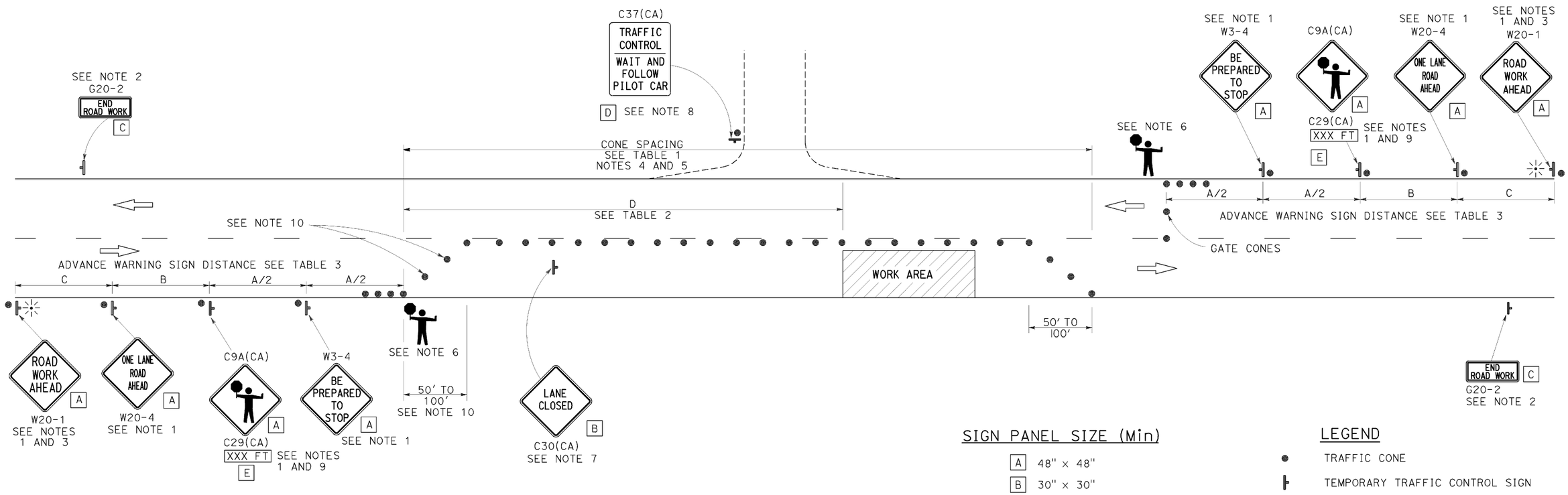

SIGN PANEL SIZE (Min)

A	48" × 48"
B	30" × 30"
C	36" × 18"
D	36" × 42"
E	20" × 7"

LEGEND

- TRAFFIC CONE
- TEMPORARY TRAFFIC CONTROL SIGN
- PORTABLE FLASHING BEACON
- FLAGGER

NOTES:

1. Each advance warning sign in each direction of travel shall be equipped with at least two flags for daytime closure. Each flag shall be at least 16" x 16" in size and shall be orange or fluorescent red-orange in color. Flashing beacons shall be placed at the locations indicated for lane closure during hours of darkness.
2. A G20-2 "END ROAD WORK" sign, as appropriate, shall be placed at the end of the lane control unless the end of work area is obvious, or ends within a larger project's limits.
3. If the W20-1 sign would follow within 2000' of a stationary W20-1 or G20-1 "ROAD WORK NEXT _____ MILES", use a W20-4 sign for the first advance warning sign.
4. All cones used for lane closures during the hours of darkness shall be fitted with retroreflective bands (or sleeves) as specified in the specifications.
5. Portable delineators, placed at one-half the spacing indicated for traffic cones, may be used instead of cones for daytime closures only.
6. Additional advance flaggers may be required. Flagger should stand in a conspicuous place, be visible to approaching traffic as well as approaching vehicles after the first vehicle has stopped. During the hours of darkness, the flagging-station and flagger shall be illuminated and clearly visible to approaching traffic. The illumination footprint of the lighting on the ground shall be at least 20' in diameter. Place a minimum of four cones at 50' intervals in advance of flagger station as shown.
7. Place C30(CA) "LANE CLOSED" sign at 500' to 1000' intervals throughout extended work areas. They are optional if the work area is visible from the flagger station.
8. When a pilot car is used, place a C37(CA) "TRAFFIC CONTROL-WAIT AND FOLLOW PILOT CAR" sign with black legend on white background at all intersections, driveways and alleys without a flagger within traffic control area. Signs shall be clean and visible at all times. Where traffic can not be effectively self-regulated, at least one flagger shall be used at each intersection within traffic control area.
9. An optional C29(CA) sign may be placed below the C9A(CA) sign.
10. Either traffic cones or barricades shall be placed on the taper. Barricades shall be Type I, II, or III.

STATE OF CALIFORNIA
DEPARTMENT OF TRANSPORTATION

TRAFFIC CONTROL SYSTEM FOR LANE CLOSURE ON TWO LANE CONVENTIONAL HIGHWAYS

NO SCALE

RSP T13 DATED APRIL 19, 2013 SUPERSEDES STANDARD PLAN T13 DATED MAY 20, 2011 - PAGE 241 OF THE STANDARD PLANS BOOK DATED 2010.

REVISED STANDARD PLAN RSP T13

4-2-13

Dist	COUNTY	ROUTE	POST MILES TOTAL PROJECT	SHEET No.	TOTAL SHEETS
11	SD	5	R58.1/R72.4	249	259

REGISTERED CIVIL ENGINEER

April 19, 2013
PLANS APPROVAL DATE

REGISTERED PROFESSIONAL ENGINEER Gurinderpal Bhullar No. C48815 Exp. 9-30-14 CIVIL STATE OF CALIFORNIA

THE STATE OF CALIFORNIA OR ITS OFFICERS OR AGENTS SHALL NOT BE RESPONSIBLE FOR THE ACCURACY OR COMPLETENESS OF SCANNED COPIES OF THIS PLAN SHEET.

TO ACCOMPANY PLANS DATED 11-04-13

TYPICAL RAMP CLOSURES

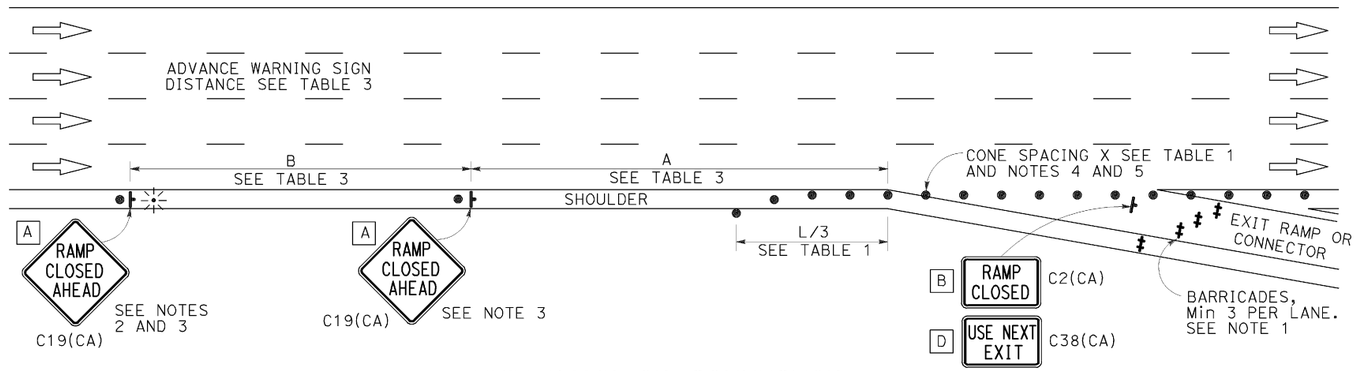

EXIT RAMP OR CONNECTOR

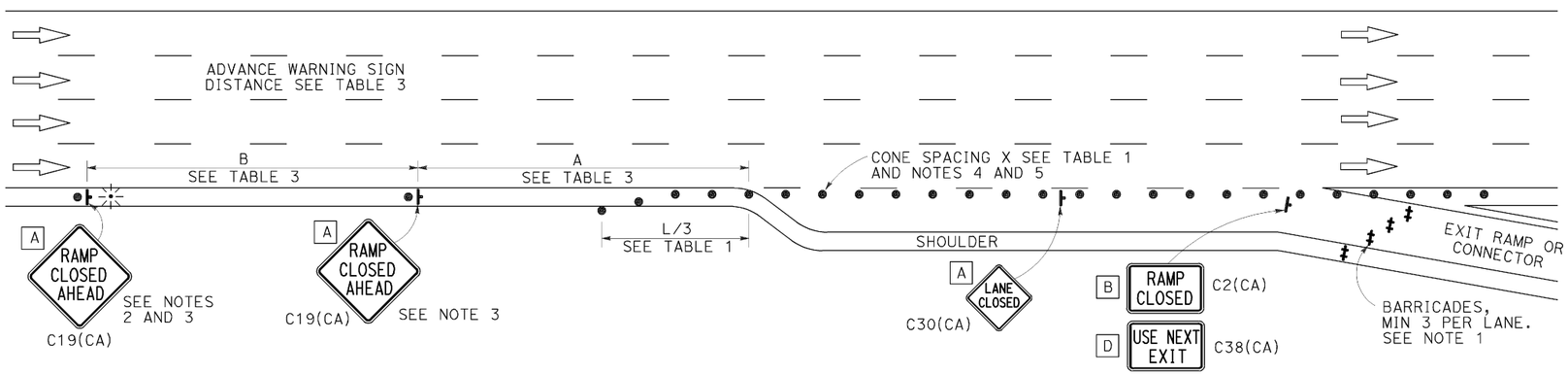

EXIT RAMP OR CONNECTOR WITH ADDITIONAL LANE

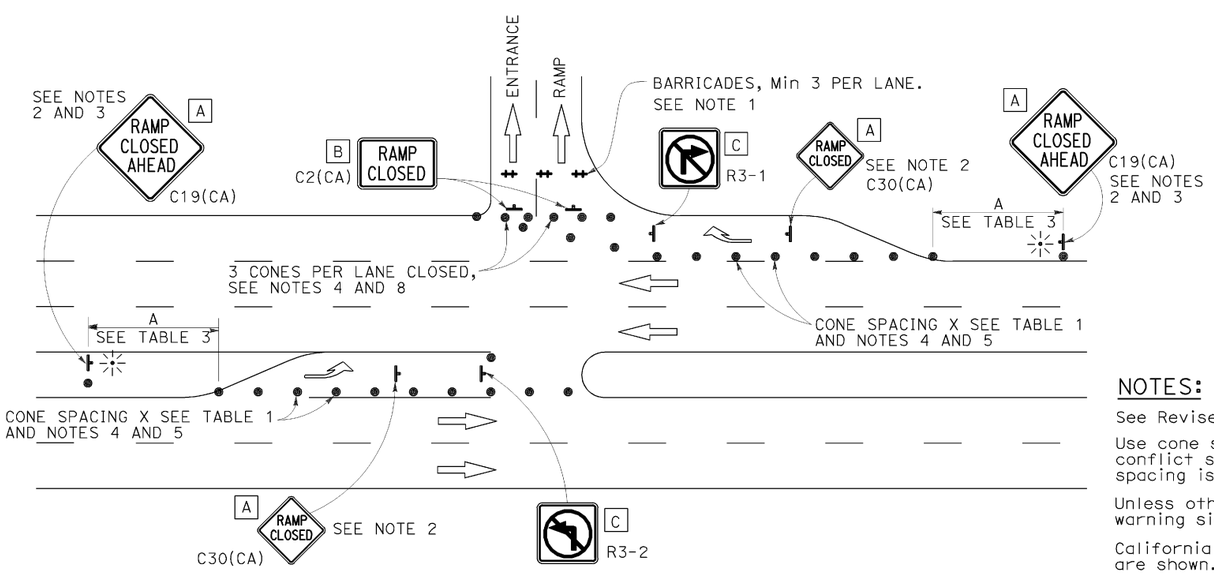

ENTRANCE RAMP WITH TURNING POCKETS

SIGN PANEL SIZE (Min)

- A 48" × 48"
- B 48" × 30"
- C 36" × 36"
- D 48" × 36"

LEGEND

- TRAFFIC CONE
- TEMPORARY TRAFFIC CONTROL SIGN
- BARRICADES
- PORTABLE FLASHING BEACON

NOTES:

1. Barricades shall be Type I, II, or III for closures lasting one week or less and Type III for closures lasting longer than one week.
2. In addition to placing the C19(CA) "RAMP CLOSED AHEAD" and C30(CA) "RAMP CLOSED" signs, black on orange overlay plates with the word "CLOSED" may be mounted, as directed by the Engineer, on all guide signs that refer to the closed ramp. The letter size on the overlay shall be the same as the guide sign.
3. Each advance C19(CA) "RAMP CLOSED AHEAD" sign shall be equipped with at least two flags for daytime closure. Each flag shall be at least 16" × 16" in size and shall be orange or fluorescent red-orange in color. A flashing beacon shall be placed on top of the first C19(CA) sign during hours of darkness.
4. All cones used for ramp closures during the hours of darkness shall be fitted with retroreflective bands (or sleeves) as specified in the specifications.
5. Portable delineators, placed at one-half the spacing indicated for traffic cones, may be used instead of cones for daytime ramp closures only.
6. At least one person shall be assigned to provide full time maintenance of traffic control devices, unless otherwise directed by the Engineer.
7. The existing "EXIT" signs shall be covered during ramp closures.
8. A minimum of 3 cones shall be placed transversely across each closed lane and shoulder.

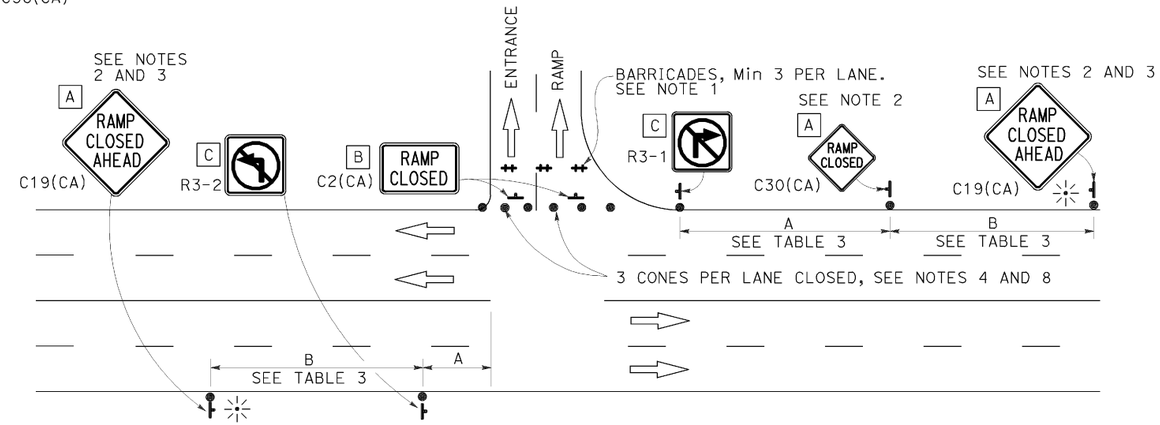

ENTRANCE RAMP WITHOUT TURNING POCKETS

NOTES:

See Revised Standard Plan RSP T9 for tables.

Use cone spacing X for taper segment, Y for tangent segment or Z for conflict situations, as approriate, per Table 1, unless X, Y, or Z cone spacing is shown on this sheet.

Unless otherwise specified in the special provisions, all temporary warning signs shall have black legend on fluorescent orange background.

California codes are designated by (CA). Otherwise, Federal (MUTCD) codes are shown.

STATE OF CALIFORNIA
DEPARTMENT OF TRANSPORTATION

TRAFFIC CONTROL SYSTEM FOR RAMP CLOSURE

NO SCALE

RSP T14 DATED APRIL 19, 2013 SUPERSEDES STANDARD PLAN T14
DATED MAY 20, 2011 - PAGE 242 OF THE STANDARD PLANS BOOK DATED 2010.

REVISED STANDARD PLAN RSP T14

2010 REVISED STANDARD PLAN RSP T14

12-18-12

Dist	COUNTY	ROUTE	POST MILES TOTAL PROJECT	SHEET No.	TOTAL SHEETS
11	SD	5	R58.1/R72.4	250	259

REGISTERED CIVIL ENGINEER

April 19, 2013
PLANS APPROVAL DATE

REGISTERED PROFESSIONAL ENGINEER Gurinderpal Bhullar No. C48815 Exp. 9-30-14 CIVIL STATE OF CALIFORNIA

THE STATE OF CALIFORNIA OR ITS OFFICERS OR AGENTS SHALL NOT BE RESPONSIBLE FOR THE ACCURACY OR COMPLETENESS OF SCANNED COPIES OF THIS PLAN SHEET.

TO ACCOMPANY PLANS DATED 11-04-13

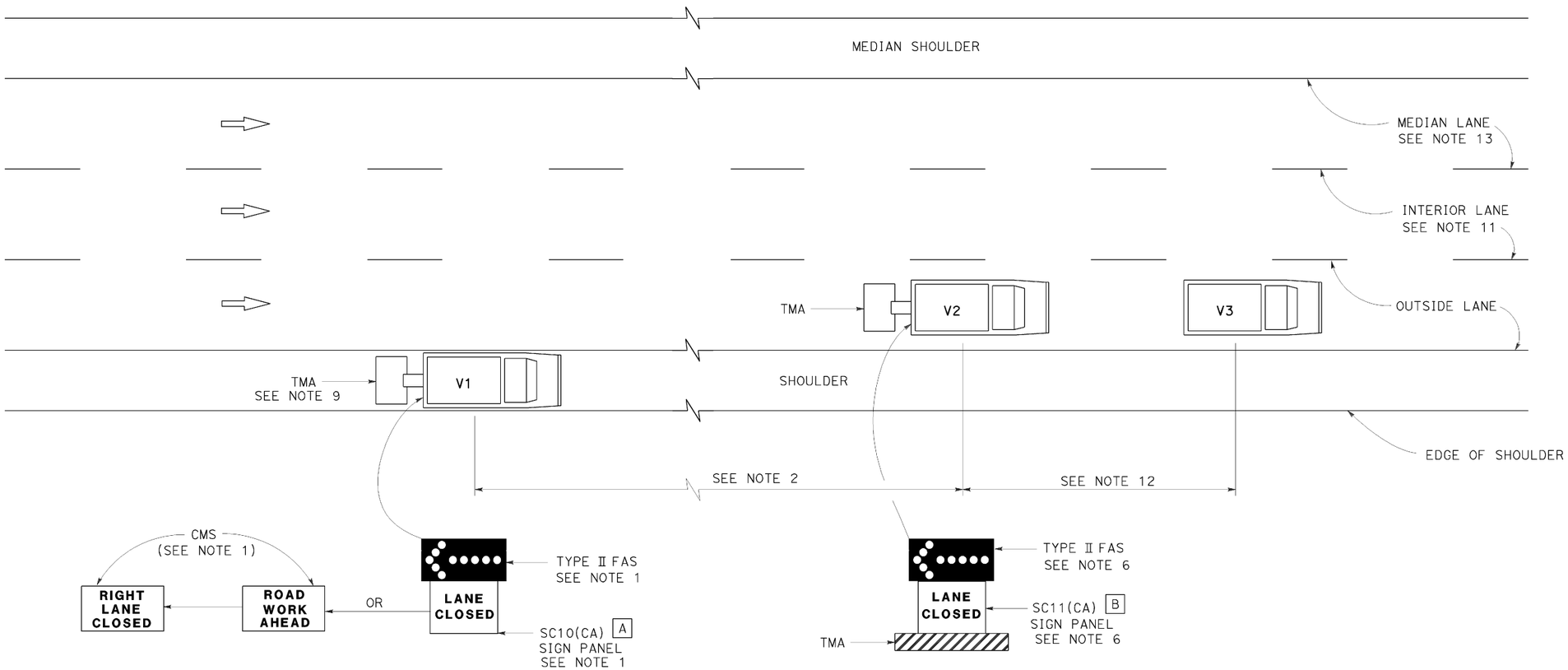

MOVING LANE CLOSURE ON MEDIAN LANE OR OUTSIDE LANE OF MULTILANE HIGHWAYS

SIGN PANEL SIZE (Min)

A 66" x 36"

B 54" x 42"

LEGEND

V1	SIGN VEHICLE
V2	SHADOW VEHICLE
V3	WORK/APPLICATION VEHICLE
	FLASHING ARROW SIGN (FAS)
CMS	CHANGEABLE MESSAGE SIGN
TMA	TRUCK-MOUNTED ATTENUATOR

NOTES:

1. Either a changeable message sign or a SC10(CA) sign panel and a Type II flashing arrow sign shall be mounted on the rear of sign vehicle V1. The changeable message sign shall be sequenced to show the "ROAD WORK AHEAD" message first, followed by the "RIGHT LANE CLOSED" message. For median lane closure, the flashing arrow symbol shall be reversed with the arrowhead on the right and the changeable message sign shall show "LEFT LANE CLOSED".
2. If traffic queues develop, sign vehicle V1 should be positioned upstream from the end of queue. Sign vehicle V1 shall be positioned where highly visible when shoulders are not available.
3. A minimum sight distance of 1500′ should be provided in advance of sign vehicle V1.
4. Sign vehicle V1 should remain at the beginning of horizontal or vertical curves until the other vehicles (V2 and V3) are far enough beyond the curve to resume the minimum sight distance of 1500′.
5. Vehicle-mounted sign panels shall have Type III or above retroreflective sheeting, black on white, or black on fluorescent orange, with 6" minimum series D letters per Caltrans sign specifications.
6. Shadow vehicle V2 shall be equipped with a truck-mounted attenuator. The sign panel shown and a Type II flashing arrow sign shall be mounted on the rear of shadow vehicle V2. For median lane closure the flashing arrow sign symbol shall be displayed with the arrowhead on the right.
7. All vehicles used for lane closures shall be equipped with two-way radios, and the vehicle operators shall maintain communication during the work or application operation.
8. All vehicles shall be equipped with flashing or rotating amber lights.
9. If sign vehicle V1 encroaches into the traffic lane due to insufficient shoulder width, sign vehicle V1 shall be equipped with a truck-mounted attenuator. Sign vehicle V1 shall stay as close to the edge of shoulder as practicable.
10. Where workers would be on foot in the work area, a stationary type lane closure (Revised Standard Plan T10, T11, etc., as applicable) shall be used instead of this plan.
11. For moving lane closure on interior lane of multilane highways, use Revised Standard Plan T16.
12. The spacing between work vehicle(s) and the shadow vehicles, and between each shadow vehicle should be minimized to deter road users from driving in between.
13. When the work/application vehicle V3 occupies the median lane, sign vehicle V1 should drive in the median shoulder and indicate left lane closed ahead.

STATE OF CALIFORNIA
DEPARTMENT OF TRANSPORTATION

TRAFFIC CONTROL SYSTEM FOR MOVING LANE CLOSURE ON MULTILANE HIGHWAYS

NO SCALE

RSP T15 DATED APRIL 19, 2013 SUPERSEDES STANDARD PLAN T15 DATED MAY 20, 2011 - PAGE 243 OF THE STANDARD PLANS BOOK DATED 2010.

REVISED STANDARD PLAN RSP T15

2010 REVISED STANDARD PLAN RSP T15

12-18-12

Dist	COUNTY	ROUTE	POST MILES TOTAL PROJECT	SHEET No.	TOTAL SHEETS
11	SD	5	R58.1/R72.4	251	259

REGISTERED CIVIL ENGINEER

April 19, 2013
PLANS APPROVAL DATE

REGISTERED PROFESSIONAL ENGINEER Gurinderpal Bhullar No. C48815 Exp. 9-30-14 CIVIL STATE OF CALIFORNIA

THE STATE OF CALIFORNIA OR ITS OFFICERS OR AGENTS SHALL NOT BE RESPONSIBLE FOR THE ACCURACY OR COMPLETENESS OF SCANNED COPIES OF THIS PLAN SHEET.

TO ACCOMPANY PLANS DATED 11-04-13

2010 REVISED STANDARD PLAN RSP T16

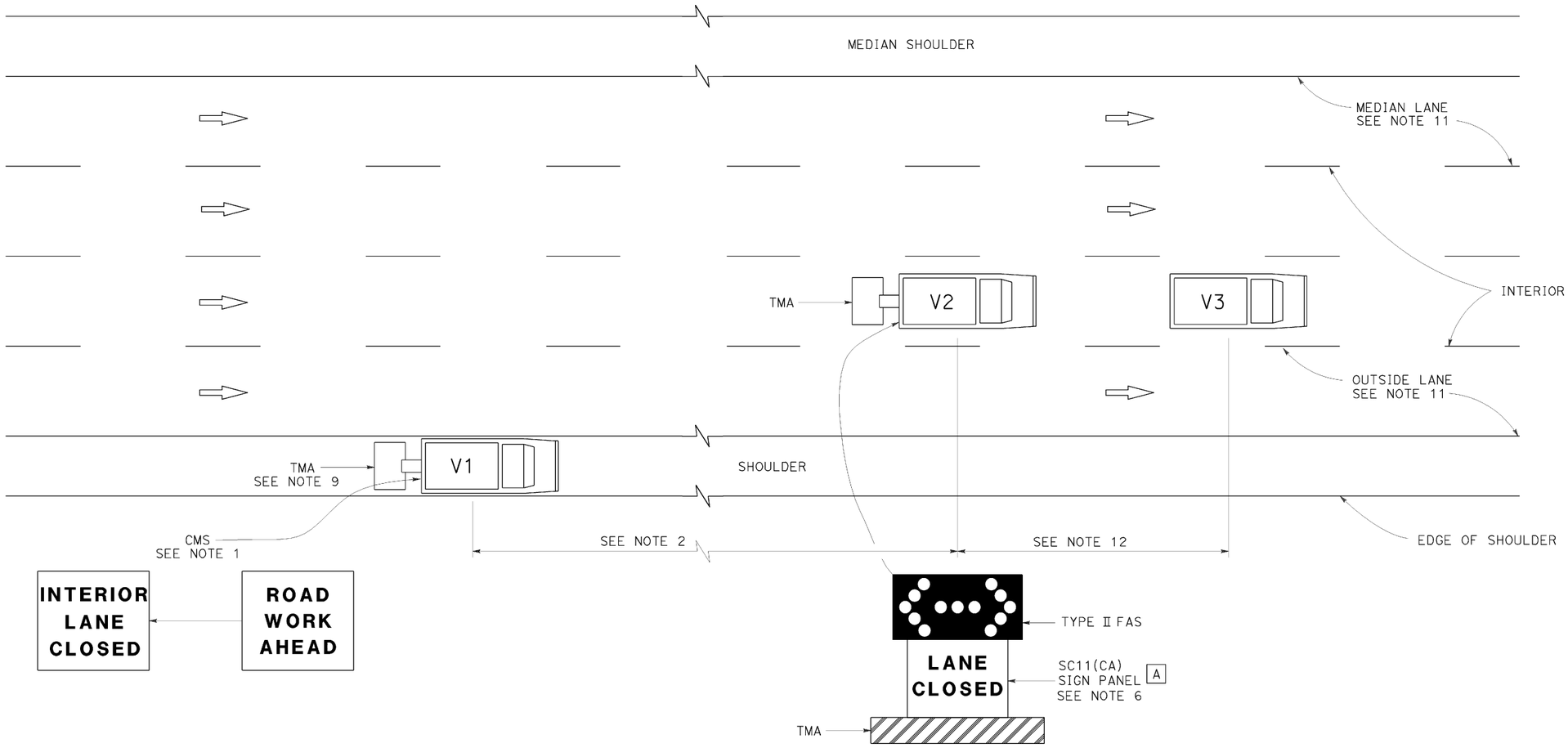

SIGN PANEL SIZE (Min)

A 54" x 42"

LEGEND

V1	SIGN VEHICLE
V2	SHADOW VEHICLE
V3	WORK/APPLICATION VEHICLE
	FLASHING ARROW SIGN (FAS) IN FLASHING DOUBLE ARROW MODE
CMS	CHANGEABLE MESSAGE SIGN
TMA	TRUCK-MOUNTED ATTENUATOR

MOVING LANE CLOSURE ON INTERIOR LANE OF MULTILANE HIGHWAYS

NOTES:

1. A changeable message sign shall be mounted on the rear of sign vehicle V1. The changeable message sign shall be sequenced to show the "ROAD WORK AHEAD" message first, followed by the "INTERIOR LANE CLOSED" message. The message "CENTER LANE CLOSED" may be used in place of the "INTERIOR LANE CLOSED" message.
2. If traffic queues develop, sign vehicle V1 should be positioned upstream from the end of queue. Sign vehicle V1 shall be positioned where highly visible when shoulders are not available.
3. A minimum sight distance of 1500′ should be provided in advance of sign vehicle V1.
4. Sign vehicle V1 should remain at the beginning of horizontal or vertical curves until the other vehicles (V2 and V3) are far enough beyond the curve to resume the minimum sight distance of 1500′.
5. Vehicle-mounted sign panels shall have Type III or above retroreflective sheeting, black on white, or black on fluorescent orange, with 6" minimum series D letters per Caltrans sign specifications.
6. Shadow vehicle V2 shall be equipped with a truck-mounted attenuator. The sign panel shown and a Type II flashing arrow sign shall be mounted on the rear of shadow vehicle V2.
7. All vehicles used for lane closures shall be equipped with two-way radios, and the vehicle operators shall maintain communication during the work or application operation.
8. All vehicles shall be equipped with flashing or rotating amber lights.
9. If sign vehicle V1 encroaches into the traffic lane due to insufficient shoulder width, sign vehicle V1 shall be equipped with a truck-mounted attenuator. Sign vehicle V1 shall stay as close to the edge of shoulder as practicable.
10. Where workers would be on foot in the work area, a stationary type lane closure (Revised Standard Plan T10, T11 etc., as applicable) shall be used instead of this plan.
11. For moving lane closure on median lane or outside lane of multilane highways, use Revised Standard Plan T15.
12. The spacing between work vehicle(s) and the shadow vehicles, and between each shadow vehicle should be minimized to deter road users from driving in between.

STATE OF CALIFORNIA
DEPARTMENT OF TRANSPORTATION

TRAFFIC CONTROL SYSTEM FOR MOVING LANE CLOSURE ON MULTILANE HIGHWAYS

NO SCALE

RSP T16 DATED APRIL 19, 2013 SUPERSEDES STANDARD PLAN T16
DATED MAY 20, 2011 - PAGE 244 OF THE STANDARD PLANS BOOK DATED 2010.

REVISED STANDARD PLAN RSP T16

12-18-12

DIST	COUNTY	ROUTE	POST MILES TOTAL PROJECT	SHEET NO.	TOTAL SHEETS
11	SD	5	R58.1/R72.4	252	259

REGISTERED ELECTRICAL ENGINEER

January 20, 2012
PLANS APPROVAL DATE

REGISTERED PROFESSIONAL ENGINEER
Jeffery G. McRae
No. E14512
Exp. 6-30-12
ELECTRICAL
STATE OF CALIFORNIA

THE STATE OF CALIFORNIA OR ITS OFFICERS OR AGENTS SHALL NOT BE RESPONSIBLE FOR THE ACCURACY OR COMPLETENESS OF SCANNED COPIES OF THIS PLAN SHEET.

TO ACCOMPANY PLANS DATED 11-04-13

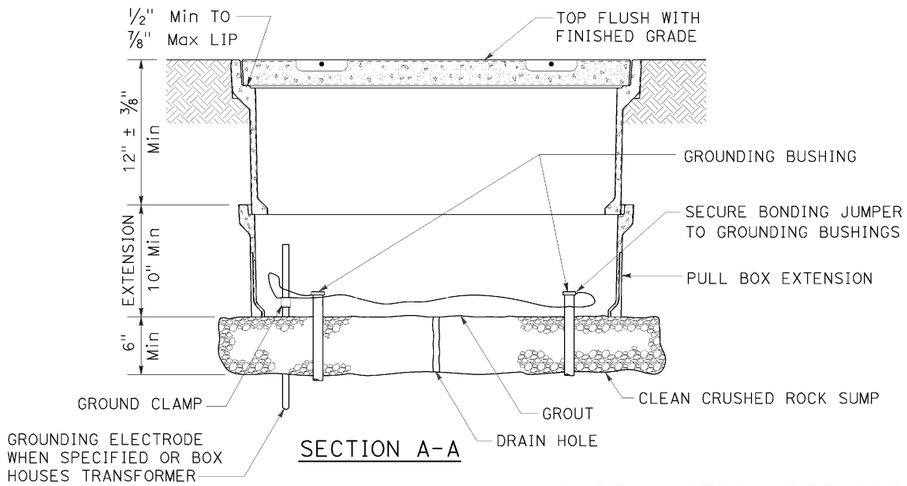

SECTION A-A

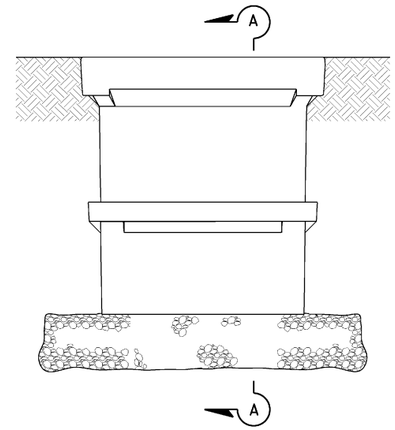

SIDE VIEW

INSTALLATION DETAILS

DETAIL A

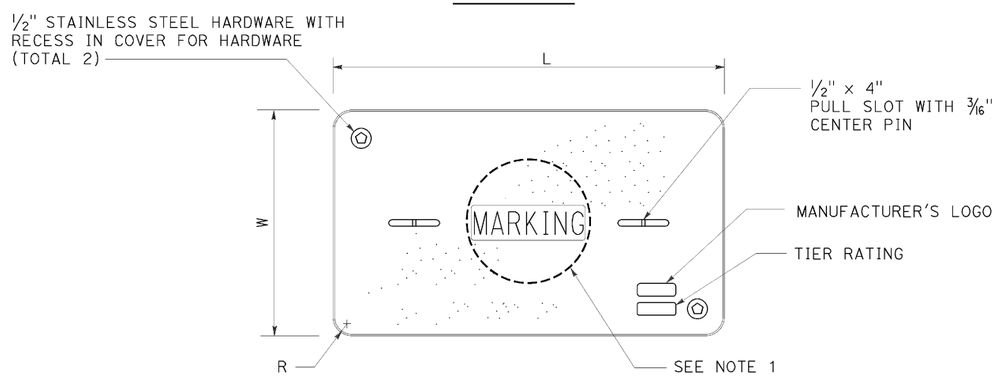

COVER TOP VIEW

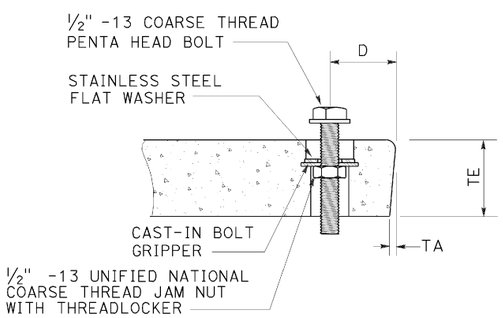

TYPICAL COVER CAPTIVE BOLT

OR SIMILAR

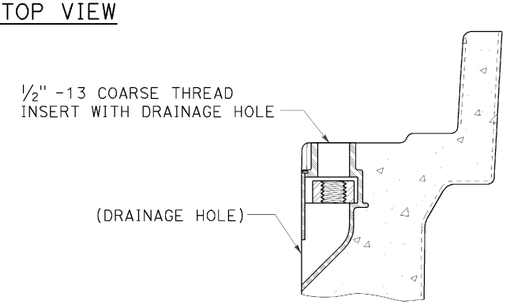

TYPICAL THREADED INSERT

OR SIMILAR

DIMENSION TABLE

PULL BOX	PULL BOX			COVER						
	MINIMUM DEPTH BOX	MINIMUM DEPTH EXTENSION	MAXIMUM WEIGHT	L	W	R	TE	TA	D	MAXIMUM WEIGHT
No. 3½	12"	N/A	40 lb	1′ - 3⅜"	10⅛"	1⅜"	2"	⅛"	1¾"	30 lb
No. 5	12"	10"	55 lb	1′ - 11¼"	1′ - 1¾"	1⅜"	2"	⅛"	1¾"	60 lb
No. 6	12"	10"	70 lb	2′ - 6½"	1′ - 5½"	1⅜"	2"	⅛"	2"	85 lb

NOTES ON PULL BOXES:

1. Pull box covers must be marked as follows: "SERVICE" Service circuits between service point and service disconnect; "SPRINKLER-CONTROL" sprinkler control circuits, 50 V or less; "CALTRANS" on all pull boxes, except pull boxes marked "SPRINKLER-CONTROL"; and "TELEPHONE" Telephone service;

   A) No. 3½ pull box.
      1) "SIGNAL" - Traffic signal circuits with or without street or sign lighting circuits.
      2) "ST LIGHTING" - Street or sign lighting circuits where voltage is under 600 V.

   B) No. 5, 6, 9 or 9A pull box.
      1) "TRAFFIC SIGNAL" - Traffic signal circuits with or without street or sign lighting circuits.
      2) "STREET LIGHTING" - Street or sign lighting circuits where voltage is under 600 V.
      3) "STREET LIGHTING-HIGH VOLTAGE" - Street or sign lighting circuits where voltage is above 600 V.
      4) "IRRIGATION" - Circuits to irrigation controller 120 V or more.
      5) "RAMP METER" - Ramp meter circuits.
      6) "COUNT STATION" - Count or speed monitor circuits.
      7) "COMMUNICATIONS" - Communication circuits.
      8) "TOS COMMUNICATIONS" - TOS communication line.
      9) "TOS POWER" - TOS power.
      10) "TDC POWER" - Telephone demarcation cabinet power.
      11) "CCTV" - Closed circuit television circuits.
      12) "TMS" - Traffic monitoring station circuits.
      13) "CMS" - Changeable message sign circuits.
      14) "HAR" - Highway advisory radio circuits.

2. The nominal dimensions of the opening in which the cover sets must be the same as the cover dimensions (L and W) plus ⅛" or greater.
3. Covers and boxes must be interchangeable with California Standard. When interchanged with a standard, the top surfaces must be flush within ⅛". Top outside radius of covers and pull boxes must have a ⅛" radius.
4. Pull box extension may be another pull box as long as the bottom edge of the pull box can fit into the cover opening.

STATE OF CALIFORNIA
DEPARTMENT OF TRANSPORTATION

ELECTRICAL SYSTEMS (PULL BOX)

NO SCALE

RSP ES-8A DATED JANUARY 20, 2012 SUPPLEMENTS THE STANDARD PLANS BOOK DATED 2010.

REVISED STANDARD PLAN RSP ES-8A

2010 REVISED STANDARD PLAN RSP ES-8A

01-09-12

DIST	COUNTY	ROUTE	POST MILES TOTAL PROJECT	SHEET NO.	TOTAL SHEETS
11	SD	5	R58.1/R72.4	253	259

Jeffery G. McRae
REGISTERED ELECTRICAL ENGINEER

January 20, 2012
PLANS APPROVAL DATE

REGISTERED PROFESSIONAL ENGINEER
Jeffery G. McRae
No. E14512
Exp. 6-30-12
ELECTRICAL
STATE OF CALIFORNIA

THE STATE OF CALIFORNIA OR ITS OFFICERS OR AGENTS SHALL NOT BE RESPONSIBLE FOR THE ACCURACY OR COMPLETENESS OF SCANNED COPIES OF THIS PLAN SHEET.

TO ACCOMPANY PLANS DATED 11-04-13

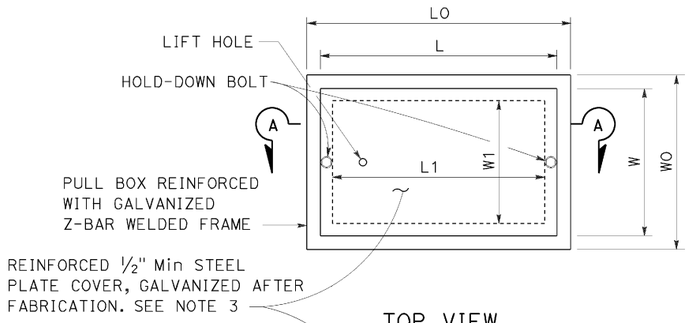

TOP VIEW

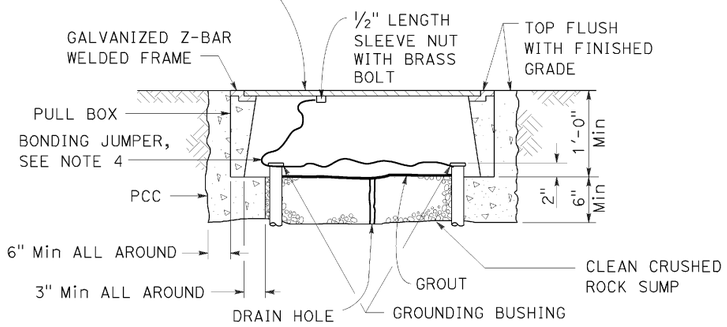

SECTION A-A

No. 3½(T), No. 5(T) AND No. 6(T) TRAFFIC PULL BOX

NOTES ON PULL BOXES:

1. Traffic pull box shall be provided with steel cover and special concrete footing. Steel cover shall have embossed non-skid pattern.
2. Steel reinforcing shall be as regularly used in the standard products of the respective manufacturer.
3. Pull box covers must be marked as follows: "SERVICE" Service circuits between service point and service disconnect; "SPRINKLER-CONTROL" Sprinkler control circuits, 50 V or less; "CALTRANS" On all pull boxes, except pull boxes marked "SPRINKLER-CONTROL"; and "TELEPHONE" Telephone service.
   A) No. 3½(T) pull box.
      1) "SIGNAL" - Traffic signal circuits with or without street or sign lighting circuits.
      2) "ST LIGHTING" - Street or sign lighting circuits where voltage is under 600 V.
   B) No. 5(T) or 6(T) pull box.
      1) "TRAFFIC SIGNAL" - Traffic signal circuits with or without street or sign lighting circuits.
      2) "STREET LIGHTING" - Street or sign lighting circuits where voltage is under 600 V.
      3) "STREET LIGHTING-HIGH VOLTAGE" - Street or sign lighting circuits where voltage is above 600 V.
      4) "IRRIGATION" - Circuits to irrigation controller 120 V or more.
      5) "RAMP METER" - Ramp meter circuits.
      6) "COUNT STATION" - Count or speed monitor circuits.
      7) "COMMUNICATION" - Communication circuits.
      8) "TOS COMMUNICATIONS" - TOS communications line.
      9) "TOS POWER" - TOS power.
      10) "TDC POWER" - Telephone demarcation cabinet power.
      11) "CCTV" - Closed circuit television circuits.
      12) "TMS" - Traffic monitoring station circuits.
      13) "CMS" - Changeable message sign circuits.
      14) "HAR" - Highway advisory radio circuits.
4. Bonding jumper for metal covers shall be 3' long, minimum.
5. The nominal dimensions of the opening in which the cover sets must be the same as the cover dimensions except the length and width dimensions shall be ⅛" greater.
6. Covers and boxes must be interchangeable with California standard male and female gages. When interchanged with a standard male or female gage, the top surfaces must be flush within ⅛".

DIMENSION TABLE

PULL BOX	BOX						COVER				
	MINIMUM * THICKNESS	MINIMUM DEPTH BOX AND EXTENSION	WO	LO	L1	W1	L **	W **	R	EDGE THICKNESS	EDGE TAPER
No. 3½(T)	1½"	1'-0"	1'-5"± 1"	1'-8⅞"±	1'-2½"±	10⅝"± 1"	1'-8"±	1'-1¾"±	0"	½"	NONE
No. 5(T)	1¾"	1'-0"	1'-11½"± 1"	2'-5½"±	1'-7"±	1'-1"± 1"	2'-3"±	1'-4"±	0"	½"	NONE
No. 6(T)	2"	1'-0"	2'-6"± 1"	2'-11½"±	1'-11½"±	1'-5"± 1"	2'-9"±	1'-8"±	0"	½"	NONE

* EXCLUDING CONDUIT WEB ** TOP DIMENSION

STATE OF CALIFORNIA
DEPARTMENT OF TRANSPORTATION

ELECTRICAL SYSTEMS (TRAFFIC RATED PULL BOX)

NO SCALE

RSP ES-8B DATED JANUARY 20, 2012 SUPPLEMENTS THE STANDARD PLANS BOOK DATED 2010.

REVISED STANDARD PLAN RSP ES-8B

2010 REVISED STANDARD PLAN RSP ES-8B

DIST	COUNTY	ROUTE	POST MILES TOTAL PROJECT	SHEET No.	TOTAL SHEETS
11	SD	5	R58.1/R72.4	254	259

Christine Chan 3/15/13
REGISTERED CIVIL ENGINEER DATE

11-04-13
PLANS APPROVAL DATE

REGISTERED PROFESSIONAL ENGINEER Christine Yuk-Ching Chan No. 74609 Exp. 12-31-13 CIVIL STATE OF CALIFORNIA

The State of California or its officers or agents shall not be responsible for the accuracy or completeness of scanned copies of this plan sheet.

STANDARD PLANS DATED 2010

A10A ABBREVIATIONS (SHEET 1 OF 2)
A10B ABBREVIATIONS (SHEET 2 OF 2)
B6-21 JOINT SEALS (MAXIMUM MOVEMENT RATING = 2")

STANDARD PLAN SHEET NO.
DETAIL NO.

INDEX TO PLANS

SHEET No.	TITLE
1	GENERAL PLAN NO. 1
2	GENERAL PLAN NO. 2
3	GENERAL PLAN NO. 3
4	STRUCTURE APPROACH SLAB & JOINT SEAL DETAILS
5	STRUCTURE APPROACH TYPE R(30D)
6	STRUCTURE APPROACH TYPE R(30S)

LEGEND:

* Paving Notch extension limits

Indicates location and limits of TYPE R(30D) Structure Approach/ Departure slab, and removal of unreinforced PCC pavement.

Indicates location and limits of TYPE R(30D) Structure Departure slab, and removal of AC pavement.

Indicates existing structure

Indicates location of existing joint seal removal and placement of new joint seal. See "STRUCTURE APPROACH & JOINT SEAL DETAILS" sheet and B6-21 for details.

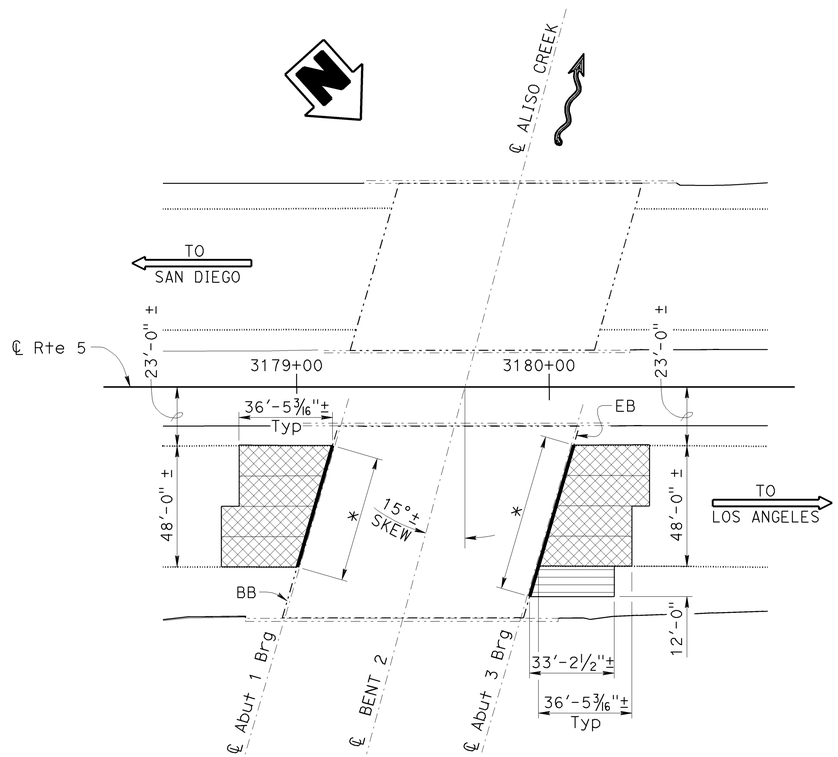

①ALISO CREEK

BRIDGE NO. 57-0006R, PM 59.62

1" = 30'

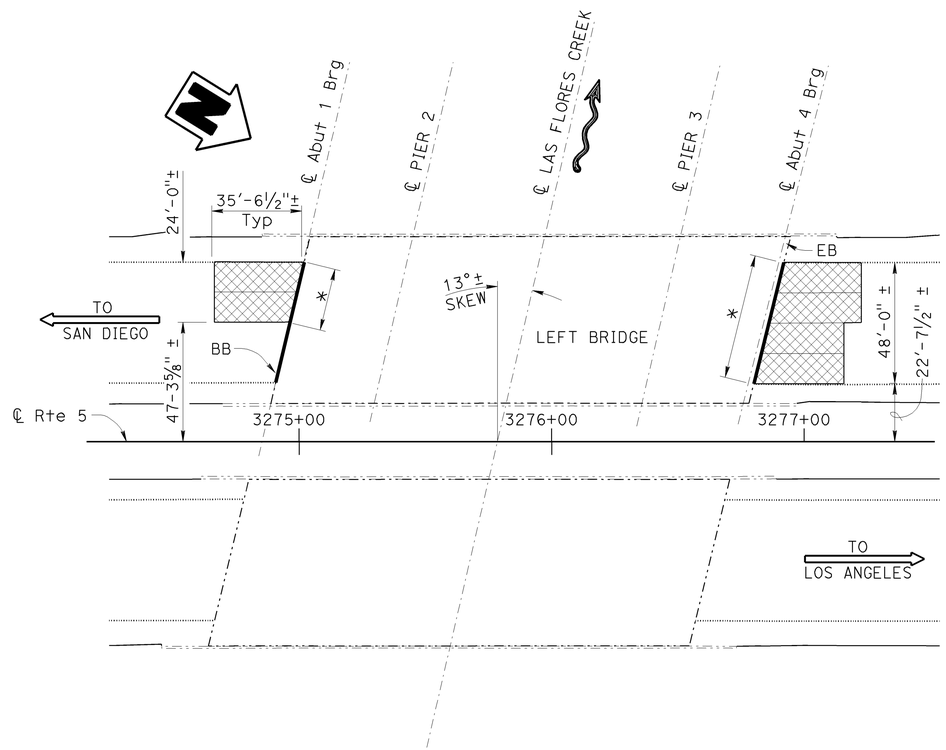

②LAS FLORES CREEK

BRIDGE NO. 57-0005L, PM 61.43

1" = 30'

QUANTITIES

ALISO CREEK — BRIDGE NO. 57-0006R

AGGREGATE BASE (APPROACH SLAB)	14	CY
STRUCTURAL CONCRETE, APPROACH SLAB (TYPE R)	134	CY
PAVING NOTCH EXTENSION	85	CF
JOINT SEAL (MR 1/2")	112	LF

LAS FLORES CREEK — BRIDGE NO. 57-0005L

AGGREGATE BASE (APPROACH SLAB)	9	CY
STRUCTURAL CONCRETE, APPROACH SLAB (TYPE R)	88	CY
PAVING NOTCH EXTENSION	56	CF
CLEAN EXPANSION JOINT	25	LF
JOINT SEAL (MR 1 1/2")	99	LF

AGRA OH — BRIDGE NO. 57-0587L/R

AGGREGATE BASE (APPROACH SLAB)	17	CY
STRUCTURAL CONCRETE, APPROACH SLAB (TYPE R)	167	CY
CLEAN EXPANSION JOINT	178	LF
JOINT SEAL (MR 1 1/2")	393	LF

SAN ONOFRE CREEK — BRIDGE NO. 57-0002L/R

AGGREGATE BASE (APPROACH SLAB)	19	CY
STRUCTURAL CONCRETE, APPROACH SLAB (TYPE R)	189	CY
CLEAN EXPANSION JOINT	116	LF
JOINT SEAL (MR 1 1/2")	268	LF

SAN MATEO CREEK — BRIDGE NO. 57-0001L/R

AGGREGATE BASE (APPROACH SLAB)	13	CY
STRUCTURAL CONCRETE, APPROACH SLAB (TYPE R)	133	CY
CLEAN EXPANSION JOINT	43	LF
JOINT SEAL (MR 2")	156	LF

Traci Menard
DESIGN ENGINEER

	BY	CHECKED
DESIGN	Christine Chan	Suzan Moradi
DETAILS	Tim Trefz	Suzan Moradi
QUANTITIES	Christine Chan	Tim Trefz

LOAD & RESISTANCE FACTOR DESIGN — LIVE LOADING: HL93 W/"LOW-BOY"; PERMIT DESIGN VEHICLE

	BY	CHECKED
LAYOUT	Christine Chan	Suzan Moradi
SPECIFICATIONS	Karen Doll	PLANS AND SPECS COMPARED Christine Chan

ORIGINAL SCALE IN INCHES FOR REDUCED PLANS 0 1 2 3

STATE OF CALIFORNIA
DEPARTMENT OF TRANSPORTATION

DIVISION OF ENGINEERING SERVICES
STRUCTURE DESIGN
DESIGN BRANCH 15

BRIDGE NO. VARIES
POST MILE VARIES

ROUTE 5 BRIDGE APPROACH AND DEPARTURE SLAB REPLACEMENT

GENERAL PLAN NO. 1

UNIT: 3604
PROJECT NUMBER & PHASE: 1100020342
CONTRACT NO.: 11-406701

DISREGARD PRINTS BEARING EARLIER REVISION DATES 11-02-12

REVISION DATES | SHEET 1 | OF 6

USERNAME => s136545 DATE PLOTTED => 09-APR-2013 TIME PLOTTED => 13:10

STRUCTURES DESIGN GENERAL PLAN SHEET (ENGLISH) (REV.09-01-10)

FILE => 11-406701-g-gp01.dgn

DIST	COUNTY	ROUTE	POST MILES TOTAL PROJECT	SHEET No.	TOTAL SHEETS
11	SD	5	R58.1/R72.4	255	259

Christine Chan 3/15/13
REGISTERED CIVIL ENGINEER DATE

11-04-13
PLANS APPROVAL DATE

REGISTERED PROFESSIONAL ENGINEER Christine Yuk-Ching Chan No. 74609 Exp. 12-31-13 CIVIL STATE OF CALIFORNIA

The State of California or its officers or agents shall not be responsible for the accuracy or completeness of scanned copies of this plan sheet.

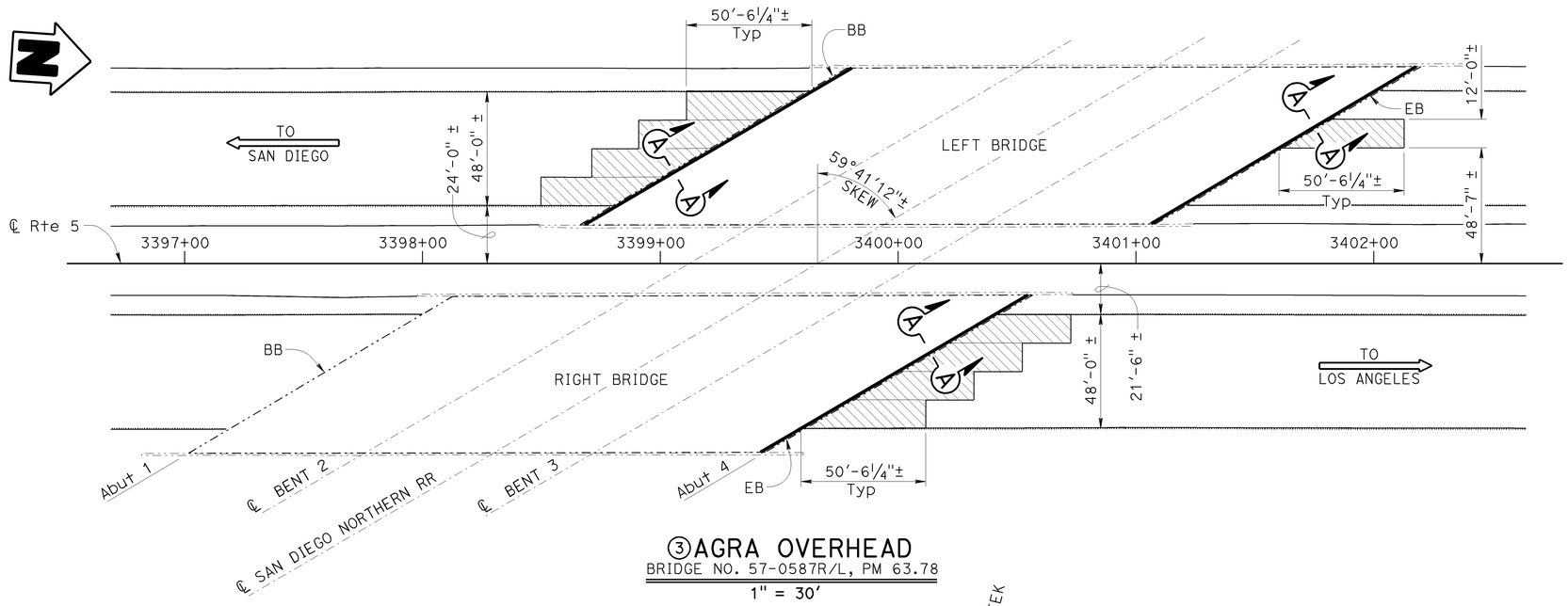

③AGRA OVERHEAD

BRIDGE NO. 57-0587R/L, PM 63.78

1" = 30'

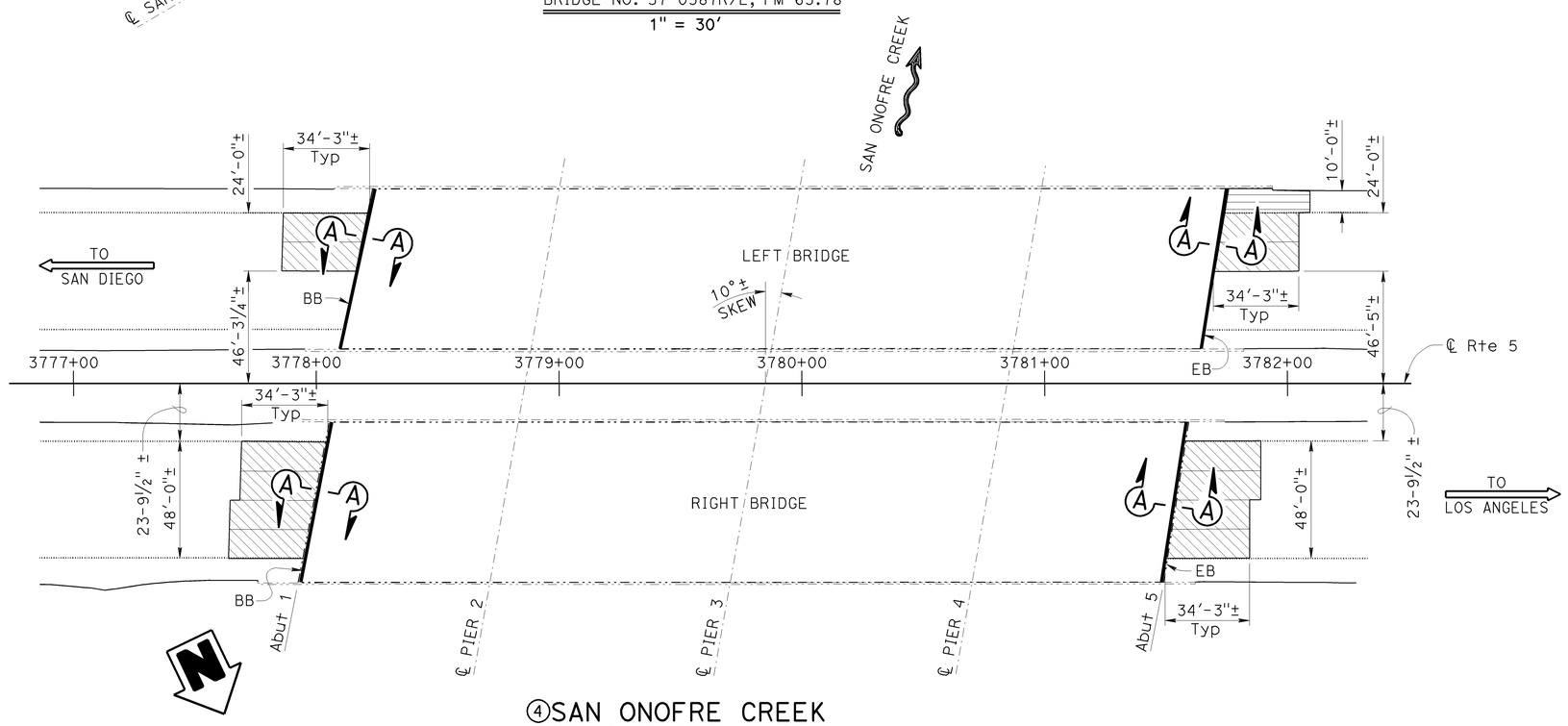

④SAN ONOFRE CREEK

BRIDGE NO. 57-0002R/L, PM 70.97

1" = 30'

NOTES:

1. For "SECTION A-A", see "STRUCTURE APPROACH & JOINT SEAL DETAILS".

LEGEND:

Indicates location and limits of TYPE R(30S) Structure Approach/ Departure slab, and removal of unreinforced PCC pavement.

Indicates location and limits of TYPE R(30S) Structure Departure slab, and removal of AC pavement.

Indicates existing structure

Indicates location of existing joint seal removal and placement of new joint seal. See "STRUCTURE APPROACH & JOINT SEAL DETAILS" sheet and B6-21 for details.

DESIGN	BY Christine Chan	CHECKED Suzan Moradi	LOAD & RESISTANCE FACTOR DESIGN	LIVE LOADING: HL93 W/"LOW-BOY"; PERMIT DESIGN VEHICLE	
DETAILS	BY Tim Trefz	CHECKED Suzan Moradi	LAYOUT	BY Christine Chan	CHECKED Suzan Moradi
QUANTITIES	BY Christine Chan	CHECKED Tim Trefz	SPECIFICATIONS	BY Karen Doll	PLANS AND SPECS COMPARED Christine Chan

Traci Menard
DESIGN ENGINEER

ORIGINAL SCALE IN INCHES FOR REDUCED PLANS 0 1 2 3

STATE OF CALIFORNIA
DEPARTMENT OF TRANSPORTATION

DIVISION OF ENGINEERING SERVICES
STRUCTURE DESIGN
DESIGN BRANCH 15

BRIDGE NO. VARIES
POST MILE VARIES

ROUTE 5 BRIDGE APPROACH AND DEPARTURE SLAB REPLACEMENT

GENERAL PLAN NO. 2

UNIT: 3604
PROJECT NUMBER & PHASE: 1100020342
CONTRACT NO.: 11-406701

DISREGARD PRINTS BEARING EARLIER REVISION DATES 11-14-12

REVISION DATES | SHEET 2 | OF 6

USERNAME => s136545 DATE PLOTTED => 09-APR-2013 TIME PLOTTED => 13:13

STRUCTURES DESIGN GENERAL PLAN SHEET (ENGLISH) (REV.09-01-10)

FILE => 11-406701-g-gp02.dgn

DIST	COUNTY	ROUTE	POST MILES TOTAL PROJECT	SHEET No.	TOTAL SHEETS
11	SD	5	R58.1/R72.4	256	259

Christine Chan 3/15/13
REGISTERED CIVIL ENGINEER DATE

11-04-13
PLANS APPROVAL DATE

REGISTERED PROFESSIONAL ENGINEER
Christine Yuk-Ching Chan
No. 74609
Exp. 12-31-13
CIVIL
STATE OF CALIFORNIA

The State of California or its officers or agents shall not be responsible for the accuracy or completeness of scanned copies of this plan sheet.

NOTES:

1. For "SECTION A-A", see "STRUCTURE APPROACH & JOINT SEAL DETAILS" sheet.

LEGEND:

Indicates location and limits of TYPE R(30S) Structure Approach/ Departure slab, and removal of unreinforced PCC pavement.

Indicates location and limits of TYPE R(30S) Structure Approach/ Departure slab, and removal of reinforced PCC pavement.

Indicates existing structure

Indicates location of existing joint seal removal and placement of new joint seal. See "STRUCTURE APPROACH & JOINT SEAL DETAILS" sheet and B6-21 for details.

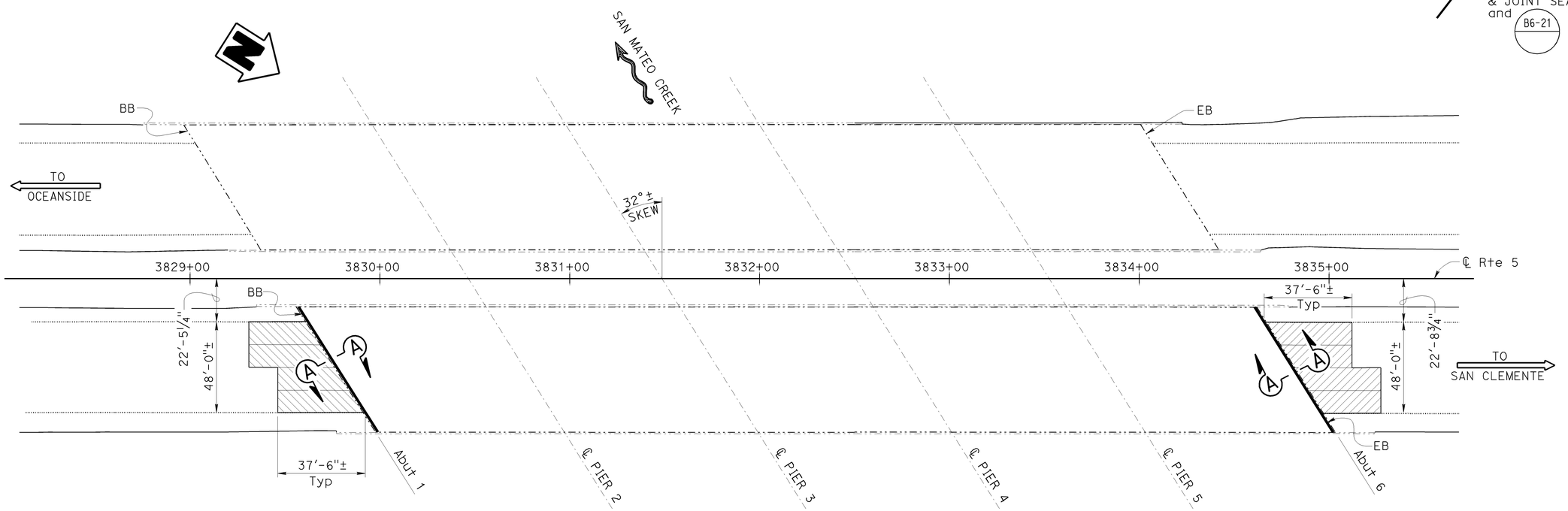

⑤SAN MATEO CREEK

BRIDGE NO. 57-0001R, PM 71.20

1" = 30'

Traci Menard DESIGN ENGINEER	DESIGN	BY Christine Chan	CHECKED Suzan Moradi	LOAD & RESISTANCE FACTOR DESIGN	LIVE LOADING: HL93 W/"LOW-BOY"; PERMIT DESIGN VEHICLE
	DETAILS	BY Tim Trefz	CHECKED Suzan Moradi	LAYOUT: BY Christine Chan	CHECKED Suzan Moradi
	QUANTITIES	BY Christine Chan	CHECKED Tim Trefz	SPECIFICATIONS: BY Karen Doll	PLANS AND SPECS COMPARED Christine Chan

STATE OF CALIFORNIA
DEPARTMENT OF TRANSPORTATION

DIVISION OF ENGINEERING SERVICES
STRUCTURE DESIGN
DESIGN BRANCH 15

BRIDGE NO. VARIES
POST MILE VARIES

ROUTE 5 BRIDGE APPROACH AND DEPARTURE SLAB REPLACEMENT

GENERAL PLAN NO. 3

ORIGINAL SCALE IN INCHES FOR REDUCED PLANS 0 1 2 3

UNIT: 3604
PROJECT NUMBER & PHASE: 1100020342
CONTRACT NO.: 11-406701

DISREGARD PRINTS BEARING EARLIER REVISION DATES

REVISION DATES: 11-15-12

SHEET 3 OF 6

USERNAME => s136545 DATE PLOTTED => 09-APR-2013 TIME PLOTTED => 13:15

FILE => 11-406701-a-gp03.dgn

DIST	COUNTY	ROUTE	POST MILES TOTAL PROJECT	SHEET No.	TOTAL SHEETS
11	SD	5	R58.1/R72.4	257	259

Christine Chan 3/15/13
REGISTERED CIVIL ENGINEER DATE

11-04-13
PLANS APPROVAL DATE

REGISTERED PROFESSIONAL ENGINEER
Christine Yuk-Ching Chan
No. 74609
Exp. 12-31-13
CIVIL
STATE OF CALIFORNIA

The State of California or its officers or agents shall not be responsible for the accuracy or completeness of scanned copies of this plan sheet.

JOINT SEAL NOTES

JOINT SEAL TYPE A:

1. Install Type A joint seal 3" up into curb or rail on the low side of the deck where joint matches curb or rail joint. For details see, B6-21

JOINT SEAL TYPE B:

1. Seal must satisfy both minimum Movement Rating (MR) and minimum W1 requirements.
2. Minimum W1 is the calculated maximum width of the joint based on field measurements. After the joints have been cleaned, minimum W1 is to be recalculated by the Engineer.
3. W1 shall be the smaller of the values determined as follows:
   A) 0.85 times the manufacturer's designed minimum uncompressed width of the seal.
   B) The width of the seal on the third successive test cycle of the pressure deflection test, when compressed to an average pressure of 3 psi.
4. Bend Type B joint seal 6" up into curb or rail on the low side of the deck where deck joint matches curb or rail joint.
5. For details, see B6-21

JOINT SEAL TABLE

LOCATION	BRIDGE NAME	BRIDGE NO.			MINIMUM "MR" (in)	Approximate Length (LF)	Existing Waterstop (Y/N)	Approx. Depth to Clean Exp. Joint (in)
①	ALISO CREEK	57-0006R	Abut 1	PN	1/2	52	N	N/A
			Abut 3	PN	1/2	60	N	N/A
②	LAS FLORES CREEK	57-0005L	Abut 1	PN	1 1/2	49	N	12
			Abut 4	PN	1 1/2	50	N	N/A
③	AGRA OH	57-0587R	Abut 4		1 1/2	131	Y	8
		57-0587L	Abut 1		1 1/2	131	Y	8
			Abut 4		1 1/2	131	Y	8
④	SAN ONOFRE CREEK	57-0002R	Abut 1		1 1/2	67	Y	8
			Abut 5		1 1/2	67	Y	8
		57-0002L	Abut 1		1 1/2	67	Y	8
			Abut 5		1 1/2	67	Y	8
⑤	SAN MATEO CREEK	57-0001R	Abut 1		2	78	Y	8
			Abut 6		2	78	Y	8

LEGEND:

Indicates bridge removal portion

Indicates existing structure

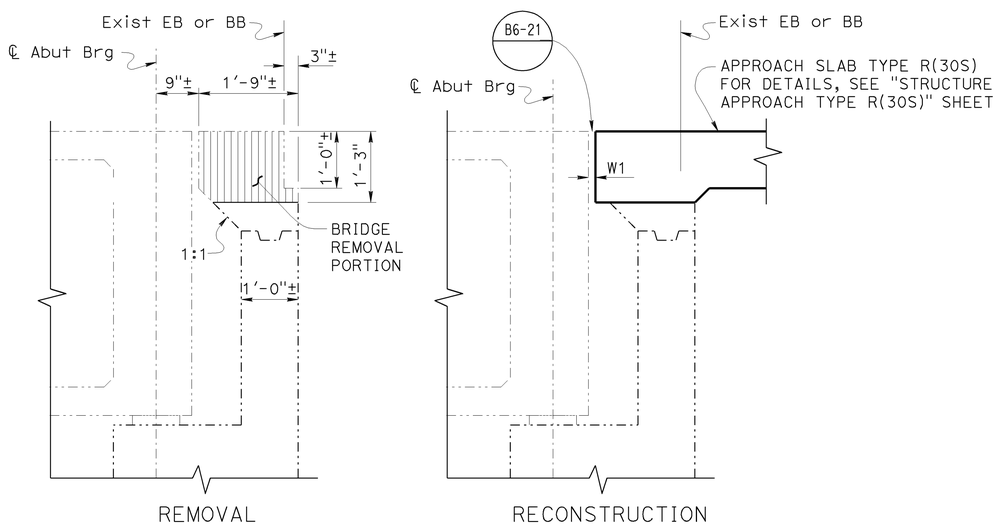

SECTION A-A

NO SCALE

NOTE:
THE CONTRACTOR SHALL VERIFY ALL CONTROLLING FIELD DIMENSIONS BEFORE ORDERING OR FABRICATING ANY MATERIAL.

	BY	CHECKED
DESIGN	Christine Chan	Suzan Moradi
DETAILS	Tim Trefz	Suzan Moradi
QUANTITIES	Christine Chan	Tim Trefz

STATE OF CALIFORNIA
DEPARTMENT OF TRANSPORTATION

DIVISION OF ENGINEERING SERVICES
STRUCTURE DESIGN
DESIGN BRANCH 15

BRIDGE NO. VARIES
POST MILE VARIES

ROUTE 5 BRIDGE APPROACH AND DEPARTURE SLAB REPLACEMENT

STRUCTURE APPROACH & JOINT SEAL DETAILS

STRUCTURES DESIGN DETAIL SHEET (ENGLISH) (REV. 09-01-10)

ORIGINAL SCALE IN INCHES FOR REDUCED PLANS 0 1 2 3

UNIT: 3604
PROJECT NUMBER & PHASE: 1100020342
CONTRACT NO.: 11-406701

DISREGARD PRINTS BEARING EARLIER REVISION DATES

REVISION DATES: 11-14-12

SHEET 4 OF 6

FILE => 11-406701-d-sad_01.dgn

USERNAME => s136545 DATE PLOTTED => 09-APR-2013 TIME PLOTTED => 13:16

DIST	COUNTY	ROUTE	POST MILES TOTAL PROJECT	SHEET No.	TOTAL SHEETS
11	SD	5	R58.1/R72.4	258	259

Christine Chan 3/15/13
REGISTERED CIVIL ENGINEER DATE

11-04-13
PLANS APPROVAL DATE

REGISTERED PROFESSIONAL ENGINEER Christine Yuk-Ching Chan No. 74609 Exp. 12-31-13 CIVIL STATE OF CALIFORNIA

The State of California or its officers or agents shall not be responsible for the accuracy or completeness of electronic copies of this plan sheet.

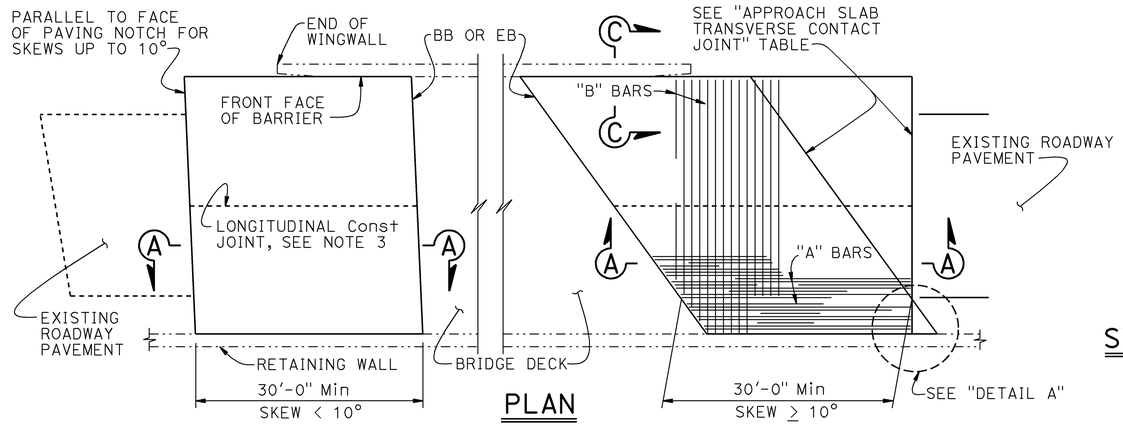

PLAN
1" = 10'

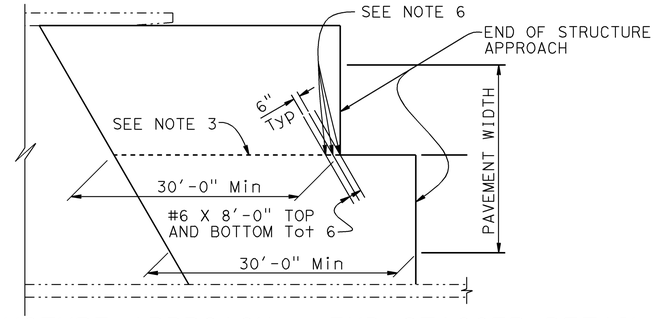

STRUCTURE APPROACH - END STAGGER DETAIL
NO SCALE

APPROACH SLAB TRANSVERSE CONTACT JOINT		
APPROACH SKEW	WITH AC ROADWAY PAVEMENT	WITH PCC ROADWAY PAVEMENT
< 10°	PARALLEL TO FACE OF PN	PARALLEL TO FACE OF PAVING NOTCH
10° - 45°	PARALLEL TO FACE OF PN USE "DETAIL A"	STAGGER LINES 24' TO 36' APART
> 45°	PARALLEL TO FACE OF PN USE "DETAIL A"	STAGGER AT EACH LANE LINE

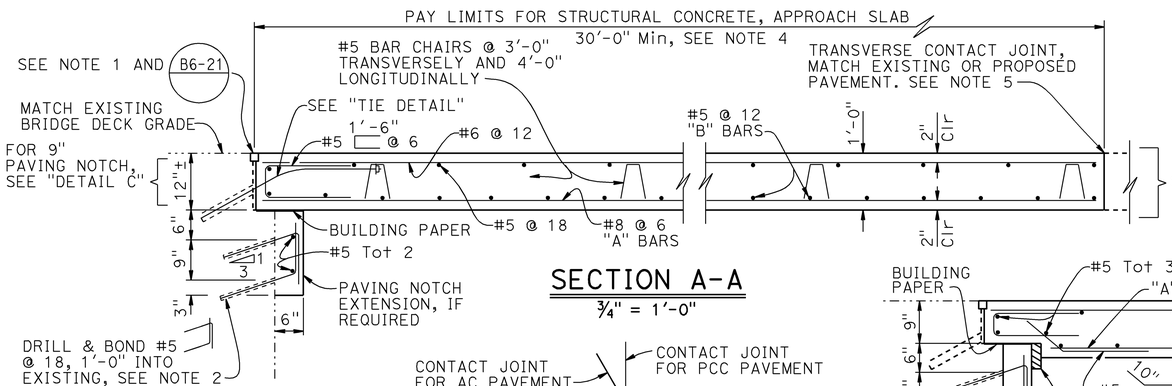

SECTION A-A
¾" = 1'-0"

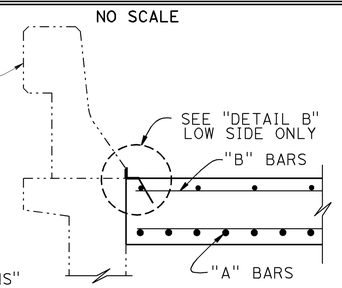

SECTION C-C
¾" = 1'-0"

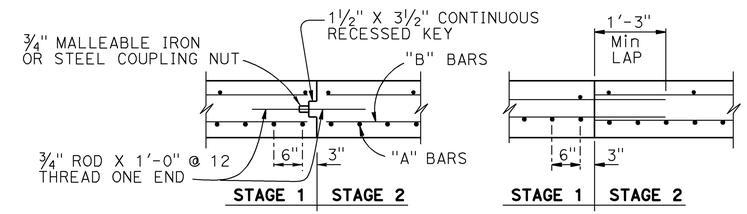

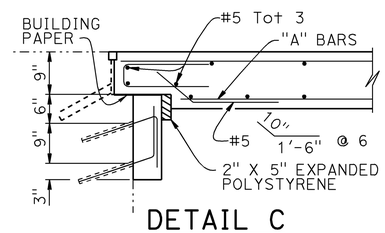

DETAIL C
¾" = 1'-0"

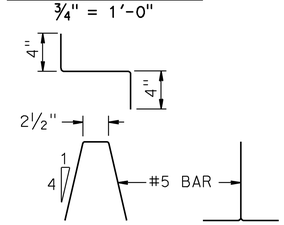

BAR CHAIR DETAIL
1½" = 1'-0"

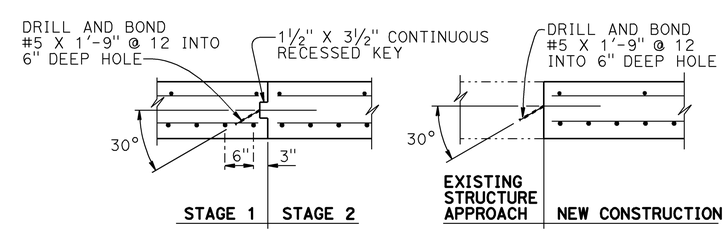

LONGITUDINAL CONSTRUCTION JOINT ALTERNATIVES
¾" = 1'-0"

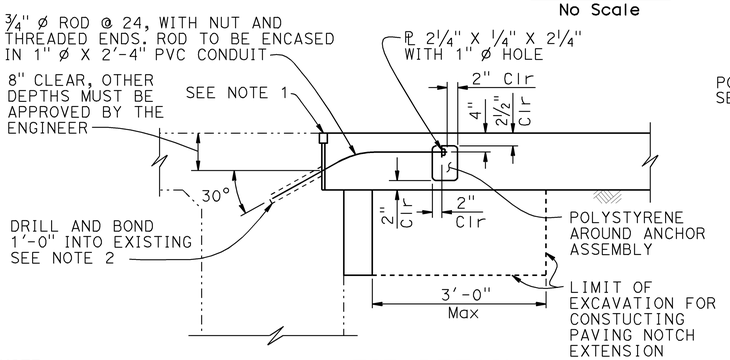

DETAIL A
No Scale

TIE DETAIL
¾" = 1'-0"

NOTE:
THE CONTRACTOR SHALL VERIFY ALL CONTROLLING FIELD DIMENSIONS BEFORE ORDERING OR FABRICATING ANY MATERIAL.

NOTE: For details not shown, see "SECTION A-A"

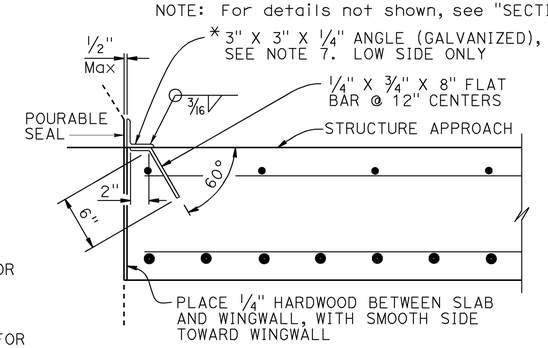

*(TO BE USED WITH CONCRETE BARRIER WITH VERTICAL FACE)

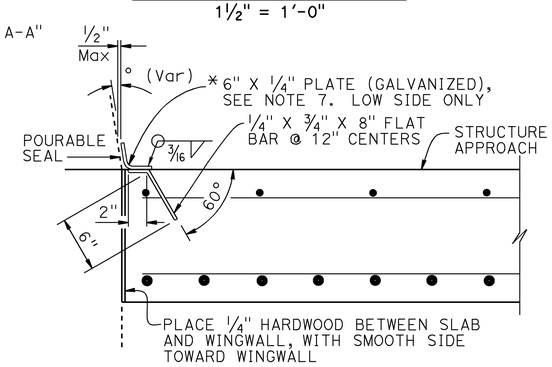

*(TO BE USED WITH CONCRETE BARRIER WITH SLOPING FACE)

DETAIL B
1½" = 1'-0"

NOTES:
1. For details not shown or noted, see Structure Plans. Adjust bar reinforcement to clear a sawcut for sealed joint, when required
2. Space to avoid existing prestress anchorages and main reinforcement
3. Longitudinal construction joints, when permitted by the Engineer, shall be located on lane lines
4. Transverse contact joint shall be a minimum of 5'-0" from an existing or constructed weakened plane joint
5. For transverse contact joint with new PCC paving. refer to Standard Plan P10
6. Couplers are required for stage construction
7. End angle or plate at beginning of barrier transition, end of wingwall or end of structure approach as applicable

STANDARD DRAWING
FILE NO. xs3-150 APPROVAL DATE July 2011

STATE OF CALIFORNIA DEPARTMENT OF TRANSPORTATION
DIVISION OF ENGINEERING SERVICES

BRIDGE NO. VARIES
POST MILE VARIES

ROUTE 5 BRIDGE APPROACH AND DEPARTURE SLAB REPLACEMENT
STRUCTURE APPROACH TYPE R(30D)

DS OSD 2147A (ENGLISH STANDARD DRAWING "XS" BORDER REV. (02-02-11)

ORIGINAL SCALE IN INCHES FOR REDUCED PLANS 0 1 2 3

UNIT: 3604
PROJECT NUMBER & PHASE: 1100020342
CONTRACT NO.: 11-406701

DISREGARD PRINTS BEARING EARLIER REVISION DATES 11-16-12

REVISION DATES | SHEET 5 | OF 6

FILE => 11-406701-x-sad_02.dgn

USERNAME => s136545 DATE PLOTTED => 09-APR-2013 TIME PLOTTED => 13:17

DIST	COUNTY	ROUTE	POST MILES TOTAL PROJECT	SHEET No.	TOTAL SHEETS
11	SD	5	R58.1/R72.4	259	259

Christine Chan 3/15/13
REGISTERED CIVIL ENGINEER DATE

11-04-13
PLANS APPROVAL DATE

The State of California or its officers or agents shall not be responsible for the accuracy or completeness of electronic copies of this plan sheet.

REGISTERED PROFESSIONAL ENGINEER Christine Yuk-Ching Chan No. 74609 Exp. 12-31-13 CIVIL STATE OF CALIFORNIA

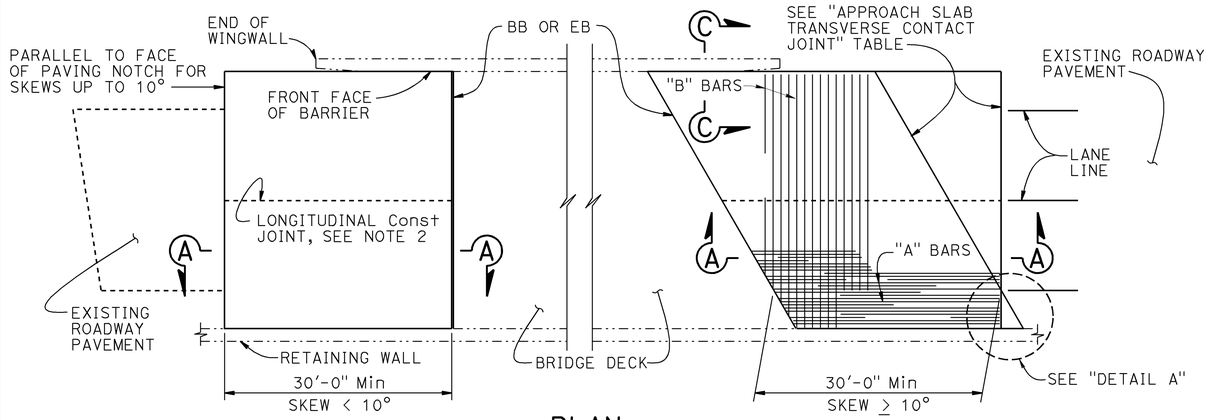

PLAN
1" = 10'

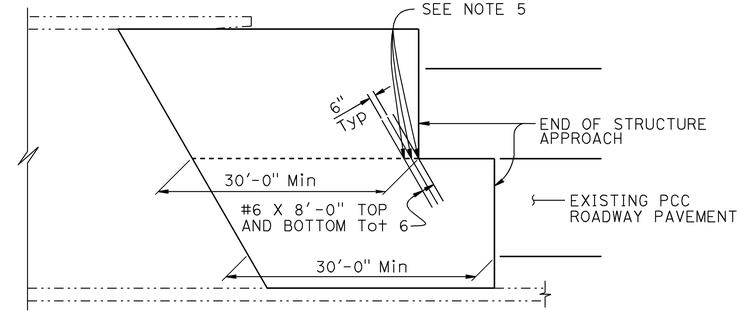

STRUCTURE APPROACH - END STAGGER DETAIL
NO SCALE

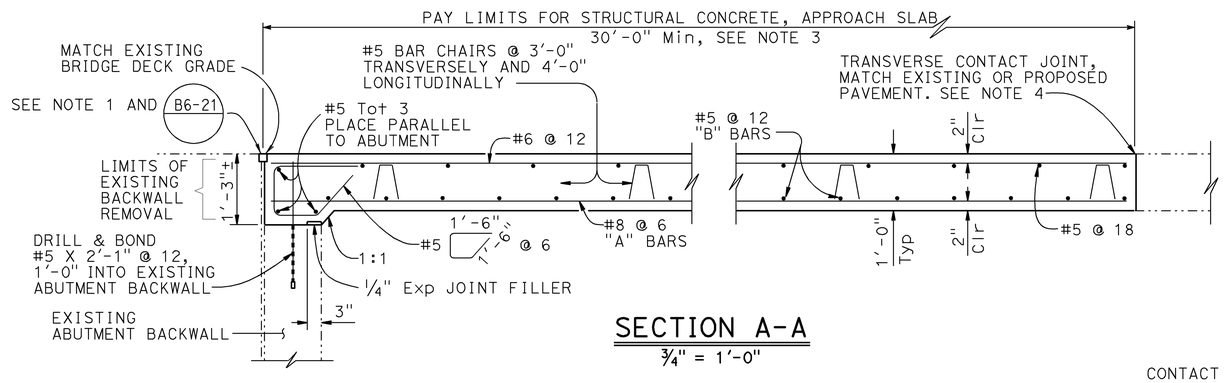

SECTION A-A
3/4" = 1'-0"

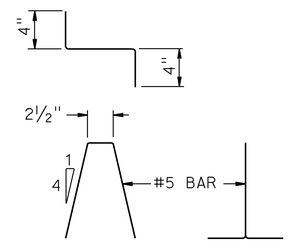

BAR CHAIR DETAIL
1 1/2" = 1'-0"

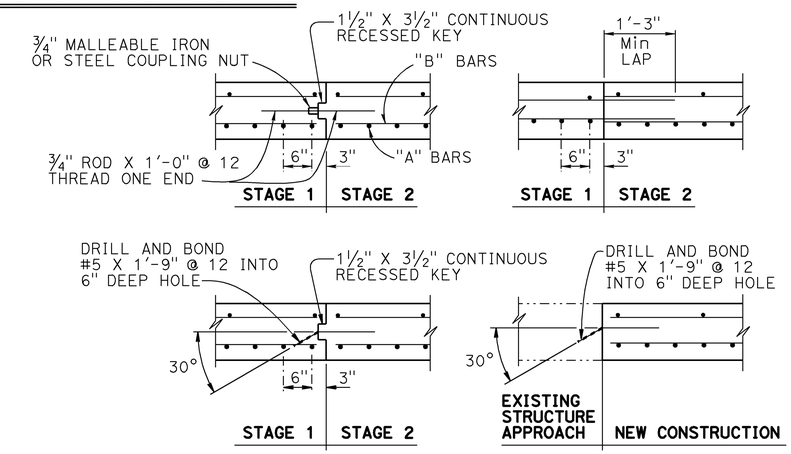

LONGITUDINAL CONSTRUCTION JOINT ALTERNATIVES
3/4" = 1'-0"

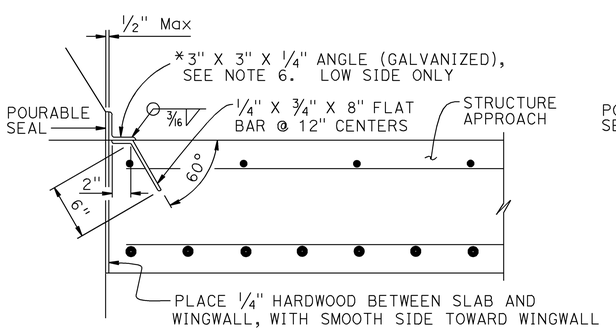

*(TO BE USED WITH CONCRETE BARRIER WITH VERTICAL FACE)

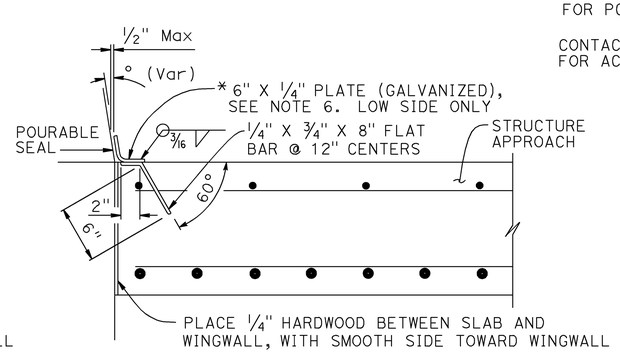

*(TO BE USED WITH CONCRETE BARRIER WITH SLOPING FACE)

DETAIL B
1 1/2" = 1'-0"

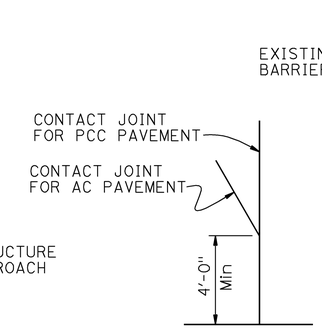

DETAIL A
No Scale

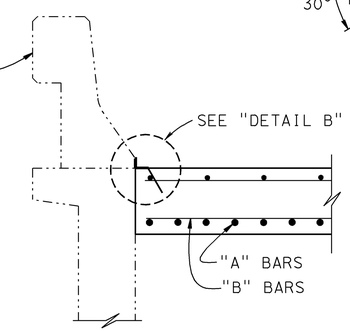

SECTION C-C
3/4" = 1'-0"

APPROACH SLAB TRANSVERSE CONTACT JOINT		
APPROACH SKEW	WITH AC ROADWAY PAVEMENT	WITH PCC ROADWAY PAVEMENT
< 10°	PARALLEL TO FACE OF PN	PARALLEL TO FACE OF PN
10° - 45°	PARALLEL TO FACE OF PN USE "DETAIL A"	STAGGER LINES 24' TO 36' APART
> 45°	PARALLEL TO FACE OF PN USE "DETAIL A"	STAGGER AT EACH LANE LINE

NOTES:

1. Sealed joint,for MR see Structure Plans. Adjust bar reinforcement to clear a sawcut for sealed joint, when required
2. Longitudinal construction joints, when permitted by Engineer, shall be located on lane lines
3. Transverse contact joint shall be a minimum of 5'-0" from an existing or constructed weakened plane joint
4. For transverse contact joint with new PCC paving, refer to Standard Plan P10
5. Couplers are required for stage construction
6. End angle or plate at beginning of barrier transition, end of wingwall or end of structure approach as applicable

NOTE:
THE CONTRACTOR SHALL VERIFY ALL CONTROLLING FIELD DIMENSIONS BEFORE ORDERING OR FABRICATING ANY MATERIAL.

STANDARD DRAWING
FILE NO. xs3-130
APPROVAL DATE July 2011

STATE OF CALIFORNIA
DEPARTMENT OF TRANSPORTATION

DIVISION OF ENGINEERING SERVICES

BRIDGE NO. VARIES
POST MILE VARIES

ROUTE 5 BRIDGE APPROACH AND DEPARTURE SLAB REPLACEMENT

STRUCTURE APPROACH TYPE R(30S)

DS OSD 2147A (ENGLISH STANDARD DRAWING "XS" BORDER REV. (02-02-11)

ORIGINAL SCALE IN INCHES FOR REDUCED PLANS 0 1 2 3

UNIT: 3604
PROJECT NUMBER & PHASE: 1100020342
CONTRACT NO.: 11-406701

DISREGARD PRINTS BEARING EARLIER REVISION DATES

REVISION DATES 11-16-12

SHEET 6 OF 6

USERNAME => s136545 DATE PLOTTED => 09-APR-2013 TIME PLOTTED => 13:19

FILE => 11-406701-x-sad_03.dgn