ACSTPI-008-1(314)E

Dist	COUNTY	ROUTE	POST MILES TOTAL PROJECT	SHEET No.	TOTAL SHEETS
11	SD	8	R25.9/R32.2	1	67

STATE OF CALIFORNIA

DEPARTMENT OF TRANSPORTATION

PROJECT PLANS FOR CONSTRUCTION ON

STATE HIGHWAY

IN SAN DIEGO COUNTY NEAR ALPINE FROM 0.2 MILE EAST OF HARBISON CANYON ROAD UNDERCROSSING TO 0.4 MILE EAST OF VIEJAS CREEK BRIDGE

TO BE SUPPLEMENTED BY STANDARD PLANS DATED 2010

INDEX OF PLANS

SHEET No.	DESCRIPTION
1	TITLE AND LOCATION MAP
2-4	TYPICAL CROSS SECTIONS
5-10	CONSTRUCTION DETAILS
11-13	DRAINAGE DETAILS AND QUANTITIES
14	UTILITY PLANS
15	CONSTRUCTION AREA SIGNS
16-19	PAVEMENT DELINEATION DETAILS AND QUANTITIES
20-25	SUMMARY OF QUANTITIES
26	ELECTRICAL PLANS
27-64	REVISED STANDARD PLANS

STRUCTURE PLANS

65-66	GENERAL PLAN
67	JOINT SEAL AND DECK REPAIR DETAILS

THE STANDARD PLANS LIST APPLICABLE TO THIS CONTRACT IS INCLUDED IN THE NOTICE TO BIDDERS AND SPECIAL PROVISIONS BOOK.

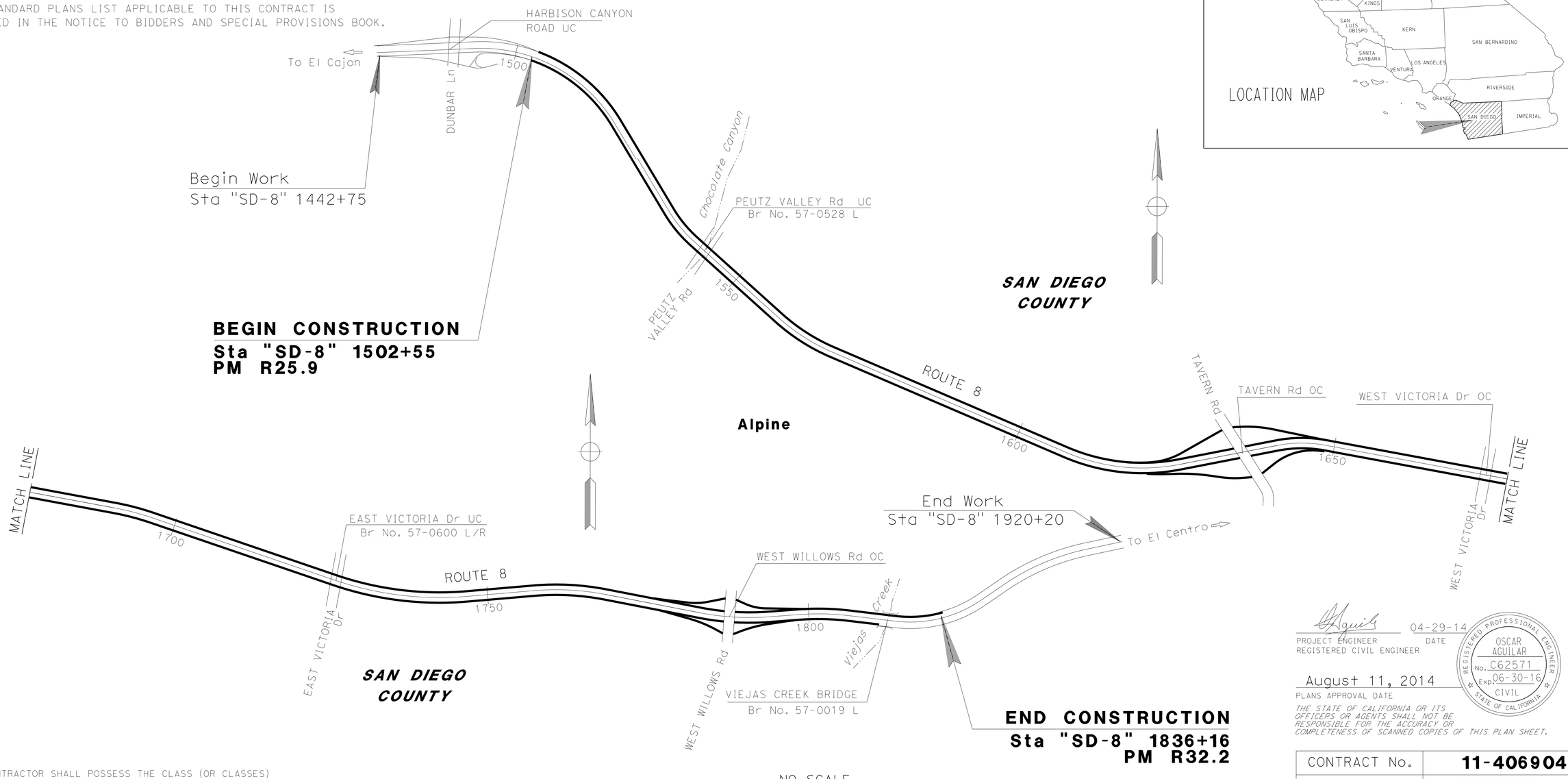

LOCATION MAP

PROJECT MANAGER: BRUCE LAMBERT

DESIGN ENGINEER: OSCAR M AGUILAR

PROJECT ENGINEER REGISTERED CIVIL ENGINEER — DATE 04-29-14

REGISTERED PROFESSIONAL ENGINEER — OSCAR AGUILAR — No. C62571 — Exp. 06-30-16 — CIVIL — STATE OF CALIFORNIA

August 11, 2014

PLANS APPROVAL DATE

THE STATE OF CALIFORNIA OR ITS OFFICERS OR AGENTS SHALL NOT BE RESPONSIBLE FOR THE ACCURACY OR COMPLETENESS OF SCANNED COPIES OF THIS PLAN SHEET.

THE CONTRACTOR SHALL POSSESS THE CLASS (OR CLASSES) OF LICENSE AS SPECIFIED IN THE "NOTICE TO BIDDERS."

CONTRACT No.	11-406904
PROJECT ID	1100020391

LAST REVISION 05-05-14

DATE PLOTTED => 12-AUG-2014
TIME PLOTTED => 08:07

Dist	COUNTY	ROUTE	POST MILES TOTAL PROJECT	SHEET No.	TOTAL SHEETS
11	SD	8	R25.9/R32.2	2	67

REGISTERED CIVIL ENGINEER 04-29-14 DATE

08-11-14
PLANS APPROVAL DATE

REGISTERED PROFESSIONAL ENGINEER OSCAR AGUILAR No. C62571 Exp. 06-30-16 CIVIL STATE OF CALIFORNIA

THE STATE OF CALIFORNIA OR ITS OFFICERS OR AGENTS SHALL NOT BE RESPONSIBLE FOR THE ACCURACY OR COMPLETENESS OF SCANNED COPIES OF THIS PLAN SHEET.

NOTES:

1. DIMENSIONS OF THE PAVEMENT STRUCTURES (STRUCTURAL SECTIONS) ARE SUBJECT TO TOLERANCES SPECIFIED IN THE STANDARD SPECIFICATIONS.
2. FOR LOCATIONS AND TYPE OF REMOVE AC DIKE/PLACE HMA DIKE, MIDWEST GUARD RAIL SYSTEM, AND SHOULDER RUMBLE STRIP (HMA, GROUND-IN INDENTATIONS) SEE SUMMARY OF QUANTITIES.
3. Exist UTILITY FACILITIES HAVE NOT BEEN PLOTTED ON THESE PLANS.
4. FOG SEAL COAT SHALL BE APPLIED TO ALL HMA SURFACES EXCEPT TRAVELED WAYS.

PAVEMENT CLIMATE REGION

SOUTH COAST

DESIGN DESIGNATION (Rte 8)

LOCATION	ADT 2009	ADT 2019	ADT 2029	ADT 2035	DHV	D %	T %	V (MPH)
EB DUNBAR LANE TO EAST WILLOWS ROAD	24,000	26,500	29,400	31,200	4,530	54%	12	70
WB DUNBAR LANE TO EAST WILLOWS ROAD	25,000	27,600	30,500	32,400				70

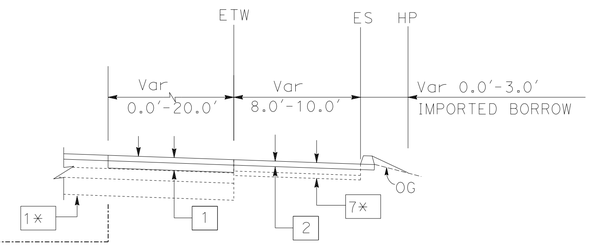

"SD-8" Sta 1648+62.00 TO "SD-8" Sta 1652+91.00
"SD-8" Sta 1797+69.00 TO "SD-8" Sta 1801+59.00

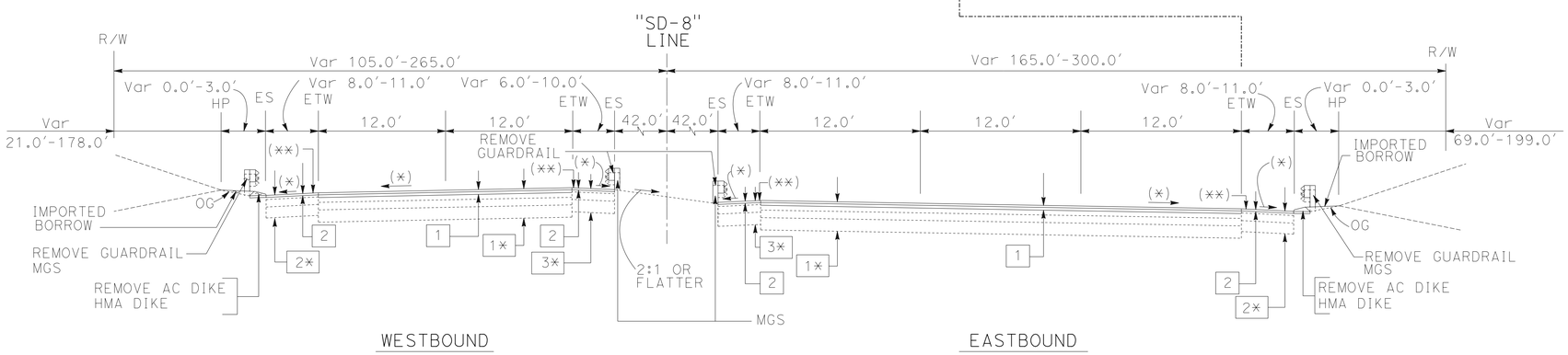

ROUTE 8

"SD-8" Sta 1540+10.00 TO Sta 1836+16.00

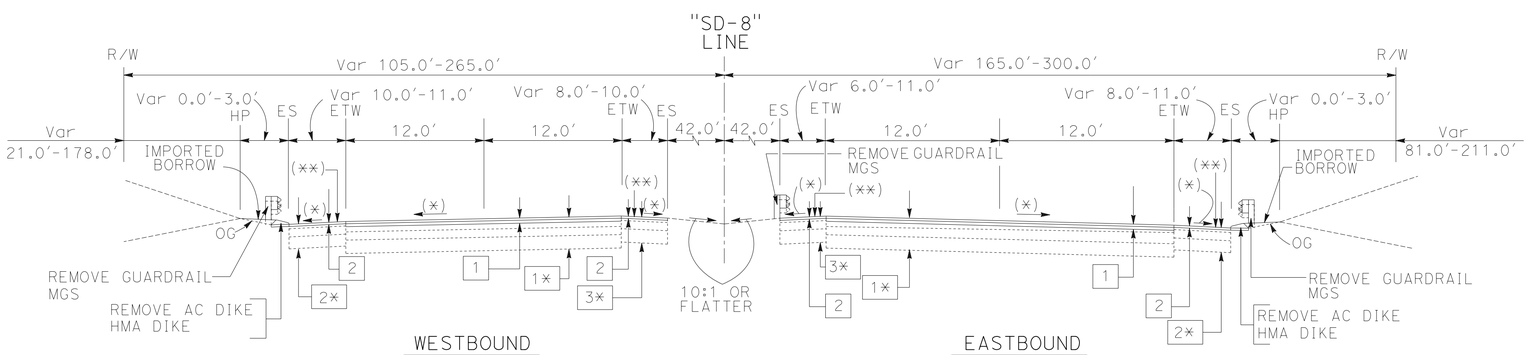

ROUTE 8

"SD-8" Sta 1502+55.00 TO Sta 1540+10.00

LEGENDS: 1. (*) = MATCH EXISTING
2. (**) = SHOULDER RUMBLE STRIP (HMA, GROUND-IN INDENTATIONS)

STRUCTURAL SECTIONS

Exist STRUCTURE

1*	- 0.70' AC - 0.55' AB - 0.90' AS
2*	- 0.30' AC - 0.55' AB - 0.80' AS
3*	- 0.30' AC - 0.55' AB - 0.90' AS
4*	- 0.54' AC - 0.25' AB
5*	- 0.64' AC - 0.15' AB
6*	- 0.64' AC - 0.94' CI-2 AB
7*	- 0.60' AC - 0.30' AB
8*	- 0.60' AC - 0.25' AB - 0.85' AS
9*	- 0.40' AC - 0.45' AB - 0.85' AS
10*	- 0.42' AC - 0.45' AB - 0.85' AS
11*	- 0.60' AC - 0.28' AB - 0.85' AS
12*	- 0.20' AC - 0.45' AB - 0.85' AS

STRUCTURAL SECTIONS

NEW STRUCTURE

1	- 0.35' COLD PLANE AC PAVEMENT - 0.15' RHMA (GAP GRADED) - 0.20' HMA (TYPE A)
2	- 0.15' COLD PLANE AC PAVEMENT - 0.15' RHMA (GAP GRADED)
3	- 0.20' COLD PLANE AC PAVEMENT - 0.20' RHMA (GAP GRADED)

TYPICAL CROSS SECTIONS

NO SCALE

X-1

REVISED BY | DATE REVISED
THIN V BUI | OSCAR AGUILAR
CALCULATED-DESIGNED BY | CHECKED BY
FUNCTIONAL SUPERVISOR | ED HAJJ
STATE OF CALIFORNIA - DEPARTMENT OF TRANSPORTATION
Caltrans
DESIGN

LAST REVISION 05-07-14 | DATE PLOTTED => 12-AUG-2014 | TIME PLOTTED => 08:07

Dist	COUNTY	ROUTE	POST MILES TOTAL PROJECT	SHEET No.	TOTAL SHEETS
11	SD	8	R25.9/R32.2	3	67

REGISTERED CIVIL ENGINEER 04-29-14 DATE

08-11-14
PLANS APPROVAL DATE

REGISTERED PROFESSIONAL ENGINEER OSCAR AGUILAR No. C62571 Exp. 06-30-16 CIVIL STATE OF CALIFORNIA

THE STATE OF CALIFORNIA OR ITS OFFICERS OR AGENTS SHALL NOT BE RESPONSIBLE FOR THE ACCURACY OR COMPLETENESS OF SCANNED COPIES OF THIS PLAN SHEET.

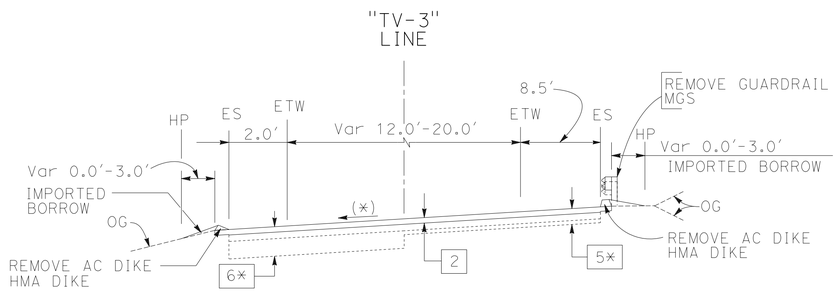

EASTBOUND OFF-RAMP TO TAVERN ROAD

"TV-3" Sta 1620+68.00 TO Sta 1637+65.00

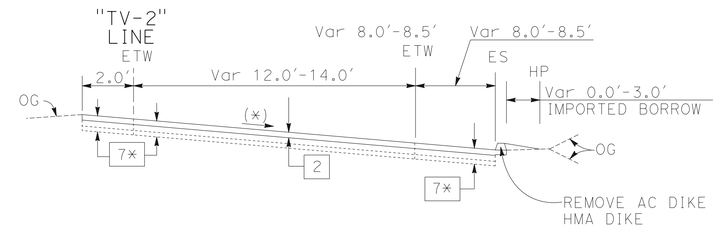

EASTBOUND ON-RAMP FROM TAVERN ROAD

"TV-2" Sta 1637+74.00 TO Sta 1648+62.00

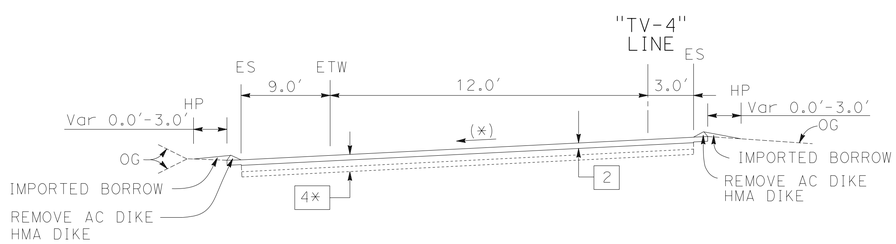

WESTBOUND ON-RAMP FROM TAVERN ROAD

"TV-4" Sta 1617+60.00 TO Sta 1634+03.00

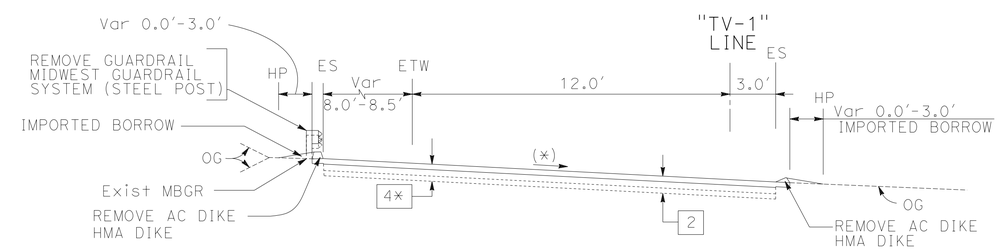

WESTBOUND OFF-RAMP TO TAVERN ROAD

"TV-1" Sta 1633+34.00 TO Sta 1648+62.00

TYPICAL CROSS SECTIONS

NO SCALE

X-2

STATE OF CALIFORNIA - DEPARTMENT OF TRANSPORTATION

Caltrans® **DESIGN**

FUNCTIONAL SUPERVISOR: ED HAJJ

CALCULATED-DESIGNED BY: OSCAR AGUILAR

CHECKED BY: THIN V BUI

REVISED BY | DATE REVISED

LAST REVISION 05-07-14 | DATE PLOTTED => 12-AUG-2014 TIME PLOTTED => 08:07

Dist	COUNTY	ROUTE	POST MILES TOTAL PROJECT	SHEET No.	TOTAL SHEETS
11	SD	8	R25.9/R32.2	4	67

REGISTERED CIVIL ENGINEER 04-29-14 DATE

08-11-14
PLANS APPROVAL DATE

REGISTERED PROFESSIONAL ENGINEER OSCAR AGUILAR No. C62571 Exp. 06-30-16 CIVIL STATE OF CALIFORNIA

THE STATE OF CALIFORNIA OR ITS OFFICERS OR AGENTS SHALL NOT BE RESPONSIBLE FOR THE ACCURACY OR COMPLETENESS OF SCANNED COPIES OF THIS PLAN SHEET.

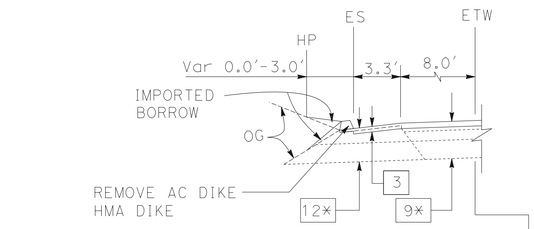

"WL-1" Sta 1793+31.00 TO Sta 1797+59.00

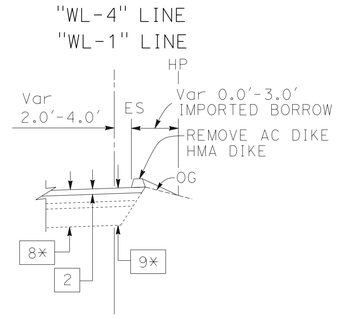

"WL-1" Sta 1788+00.00 TO Sta 1791+26.00
"WL-4" Sta 1786+58.00 TO Sta 1787+39.00

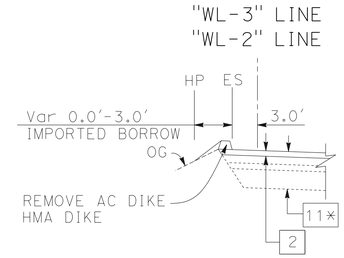

Sta "WL-3" 1787+11.00 TO Sta 1787+90.00
Sta "WL-2" 1787+33.00 TO Sta 1788+08.00

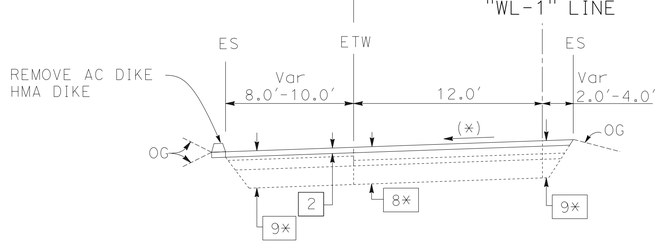

WESTBOUND ON-RAMP FROM WEST WILLOWS ROAD (PM R31.14)
"WL-4" Sta 1775+68.00 TO Sta 1787+49.00
WESTBOUND OFF-RAMP TO WEST WILLOWS ROAD PM R31.51)
"WL-1" Sta 1787+87.00 TO Sta 1799+68.00

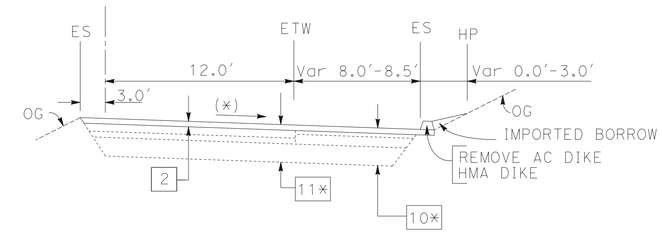

EASTBOUND OFF-RAMP TO WEST WILLOWS ROAD (PM R31.18)
"WL-3" Sta 1776+44.00 TO Sta 1788+00.00
EASTBOUND ON-RAMP FROM WEST WILLOWS ROAD (PM R31.50)
"WL-2" Sta 1787+29.00 TO Sta 1797+69.00

TYPICAL CROSS SECTIONS

NO SCALE

X-3

REVISED BY	DATE REVISED
THIN V BUI	OSCAR AGUILAR
CALCULATED-DESIGNED BY	CHECKED BY
FUNCTIONAL SUPERVISOR	ED HAJJ

STATE OF CALIFORNIA - DEPARTMENT OF TRANSPORTATION
Caltrans
DESIGN

LAST REVISION 05-07-14
DATE PLOTTED => 12-AUG-2014
TIME PLOTTED => 08:07

Dist	COUNTY	ROUTE	POST MILES TOTAL PROJECT	SHEET No.	TOTAL SHEETS
11	SD	8	R25.9/R32.2	5	67

REGISTERED CIVIL ENGINEER 04-29-14 DATE

08-11-14
PLANS APPROVAL DATE

REGISTERED PROFESSIONAL ENGINEER OSCAR AGUILAR No. C62571 Exp. 06-30-16 CIVIL STATE OF CALIFORNIA

THE STATE OF CALIFORNIA OR ITS OFFICERS OR AGENTS SHALL NOT BE RESPONSIBLE FOR THE ACCURACY OR COMPLETENESS OF SCANNED COPIES OF THIS PLAN SHEET.

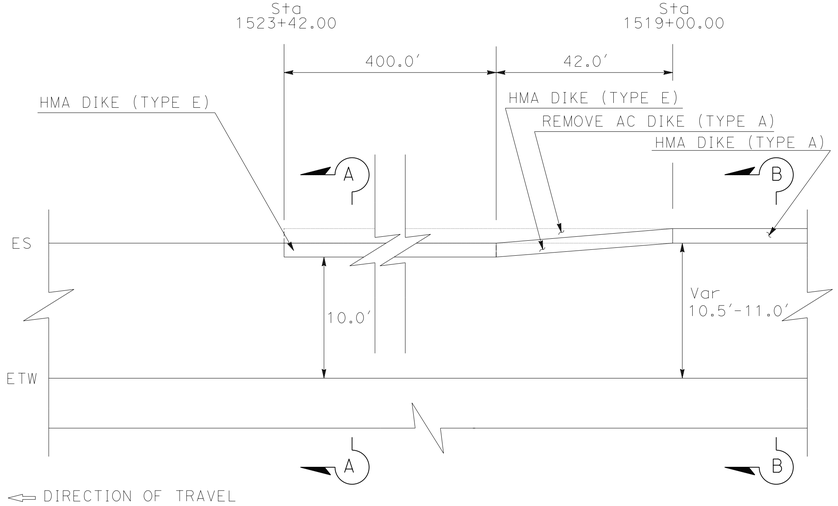

PLAN

"SD-8" EB - FROM Sta 1519+00.00 TO Sta 1523+42.00

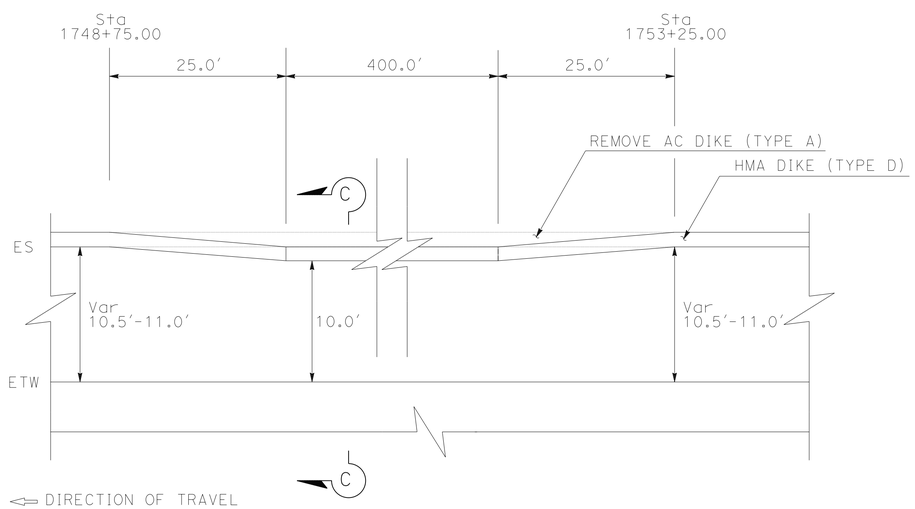

PLAN

"SD-8" WB - FROM Sta 1748+75.00 TO Sta 1753+25.00

SHOULDER WIDTH ADJUSTMENT

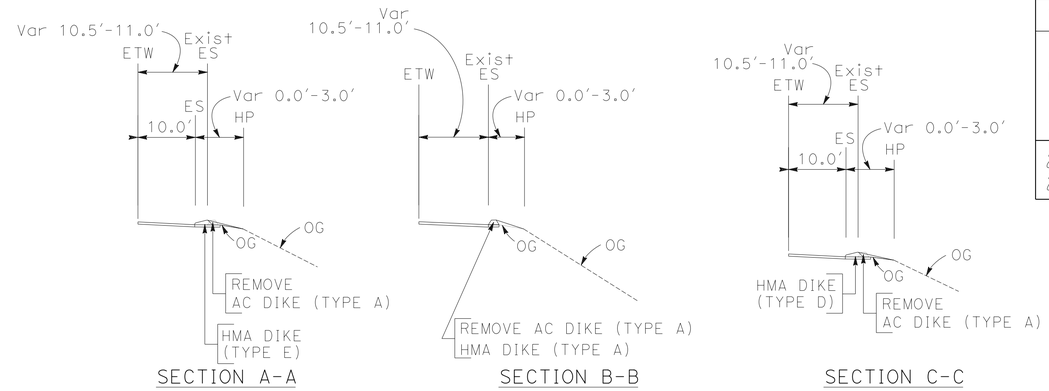

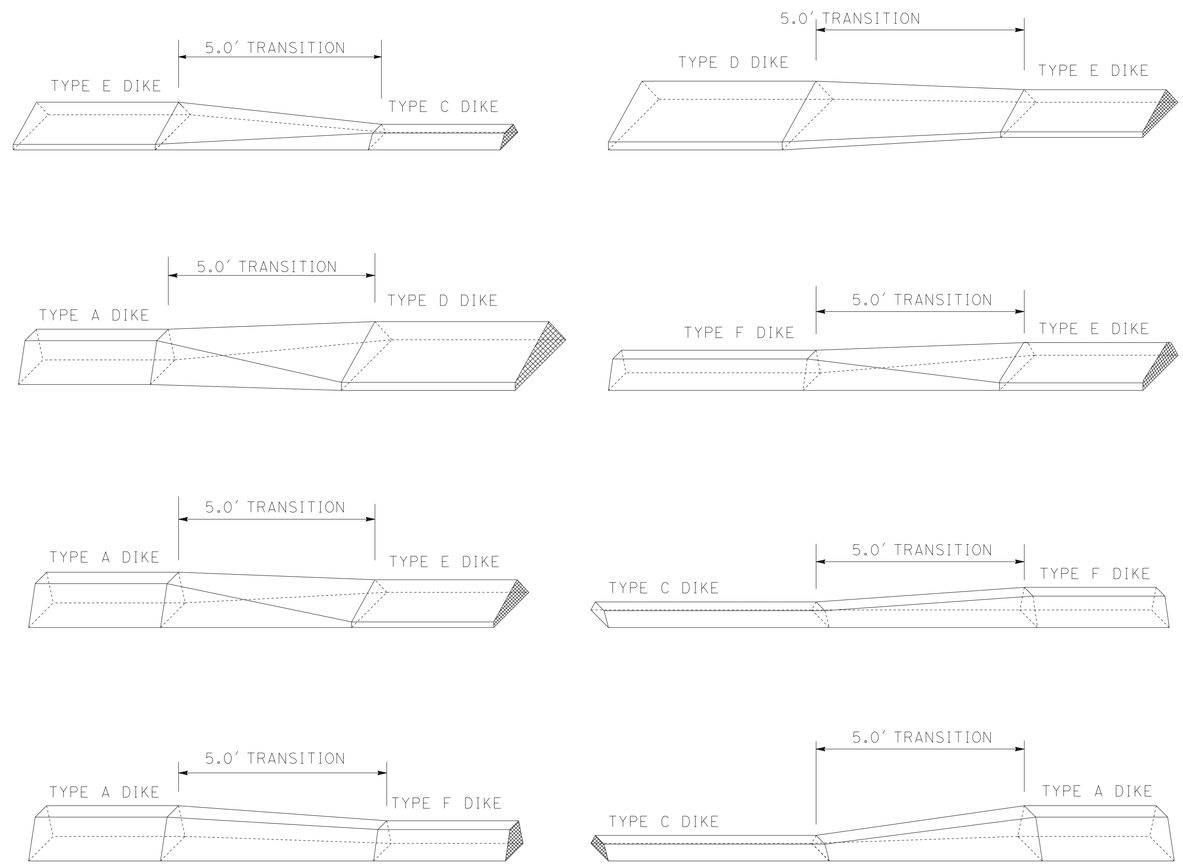

ELEVATION
DIKE TRANSITION DETAIL

CONSTRUCTION DETAILS
NO SCALE

C-1

STATE OF CALIFORNIA - DEPARTMENT OF TRANSPORTATION
Caltrans®
DESIGN

FUNCTIONAL SUPERVISOR: ED HAJJ
CALCULATED-DESIGNED BY: QUAN TON
CHECKED BY: OSCAR AGUILAR
REVISED BY
DATE REVISED

LAST REVISION 05-07-14
DATE PLOTTED => 12-AUG-2014
TIME PLOTTED => 08:08

Dist	COUNTY	ROUTE	POST MILES TOTAL PROJECT	SHEET No.	TOTAL SHEETS
11	SD	8	R25.9/R32.2	6	67

REGISTERED CIVIL ENGINEER 04-29-14 DATE

08-11-14
PLANS APPROVAL DATE

REGISTERED PROFESSIONAL ENGINEER OSCAR AGUILAR No. C62571 Exp. 06-30-16 CIVIL STATE OF CALIFORNIA

THE STATE OF CALIFORNIA OR ITS OFFICERS OR AGENTS SHALL NOT BE RESPONSIBLE FOR THE ACCURACY OR COMPLETENESS OF SCANNED COPIES OF THIS PLAN SHEET.

NOTES:

1 - FOR DETAILS NOT SHOWN, SEE RSP A77U1, A77U2, AND A77U4.
2 - TAPER THE TOP OF THE END OF THE ANCHOR BLOCK TO MATCH THE TOP ELEVATION OF THE RAILING.

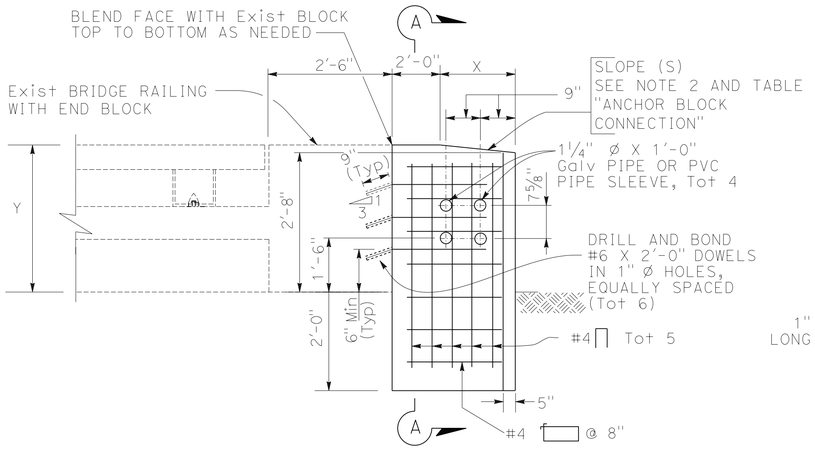

ELEVATION

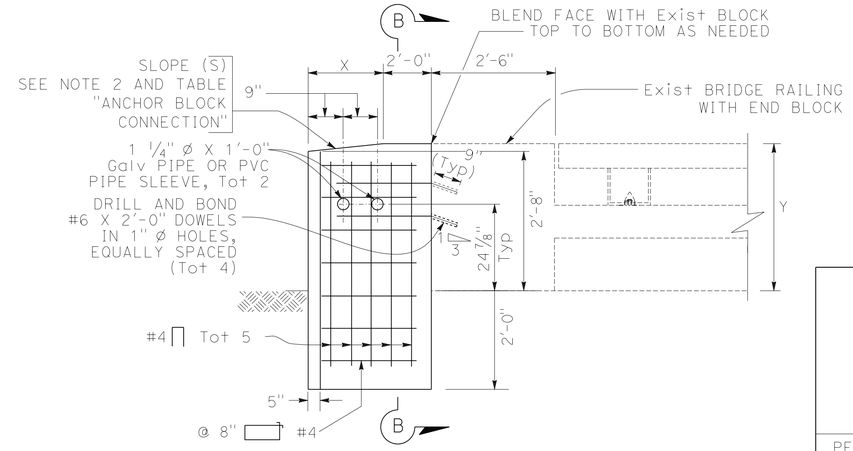

ELEVATION

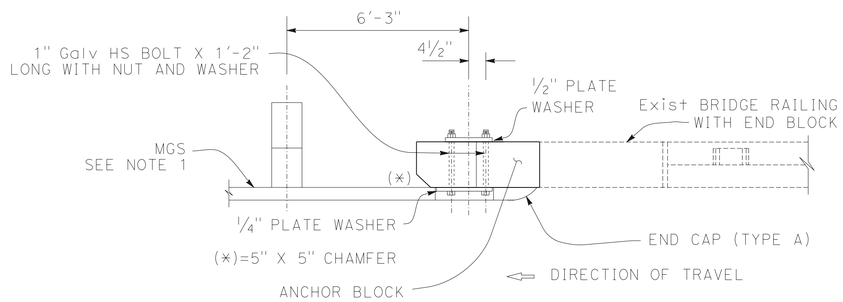

PLAN

ANCHOR BLOCK AT DEPARTURE

ANCHOR BLOCK CONNECTION

STRUCTURE	DIRECTION	SIDE	SLOPE (S)	DIMENSIONS Y	DIMENSIONS X	MGS No.
PEUTZ VALLEY UC Br 57-528	WB	OUTSIDE	4:1	3'-1"	2'-0"	17
	↓	↓	8:1	2'-10"	↓	15
	↓	INSIDE	4:1	3'-2"	2'-4"	16
EAST VICTORIA UC Br 57-600	EB	OUTSIDE	12:1	2'-9"	2'-0"	10
	WB	INSIDE	8:1	2'-10"	↓	23
	↓	OUTSIDE	6:1	2'-11"	↓	24
VIEJAS Cr Br 57-19	EB	OUTSIDE	12:1	2'-9"	2'-0"	14
	WB	↓	↓	↓	↓	28
	↓	INSIDE	4:1	3'-1"	↓	27

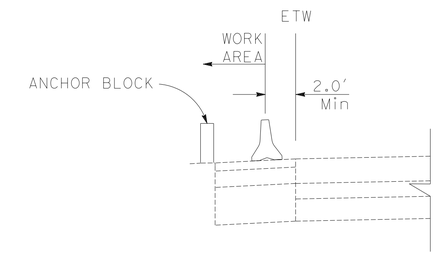

SECTION C-C

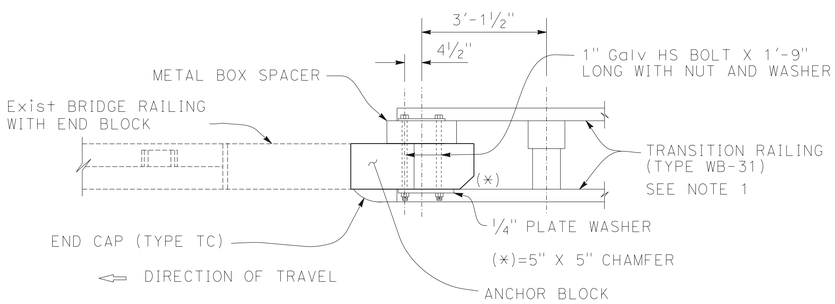

PLAN

ANCHOR BLOCK AT APPROACH

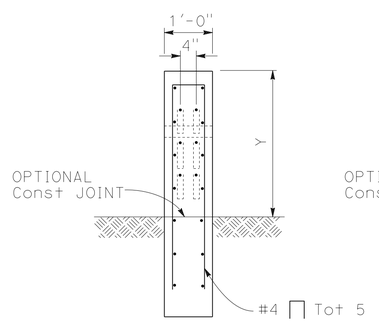

SECTION A-A

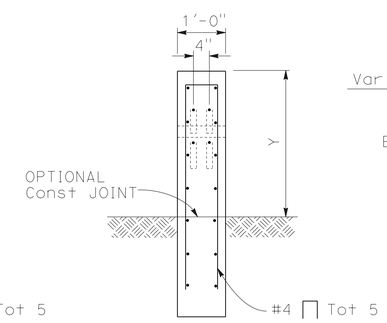

SECTION B-B

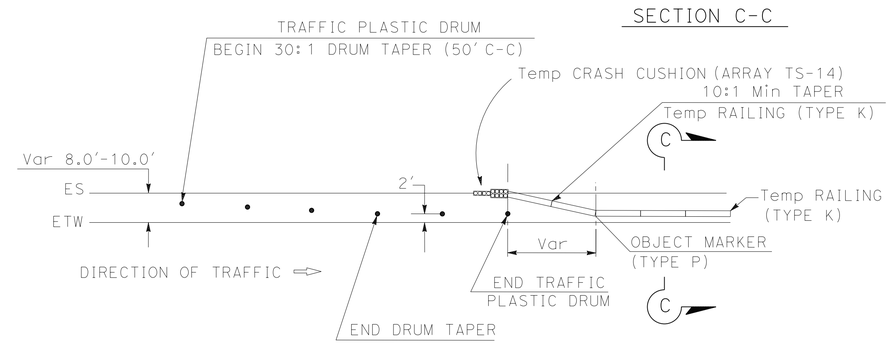

TEMPORARY RAILING (TYPE K) AT ANCHOR BLOCK CONSTRUCTION

(SEE ANCHOR BLOCK CONNECTION TABLE FOR LOCATIONS)

CONSTRUCTION DETAILS C-2

NO SCALE

REVISED BY | DATE REVISED
THIN V BUI | OSCAR AGUILAR
CALCULATED-DESIGNED BY | CHECKED BY
FUNCTIONAL SUPERVISOR | ED HAJJ

STATE OF CALIFORNIA - DEPARTMENT OF TRANSPORTATION
Caltrans® DESIGN

LAST REVISION 05-07-14 | DATE PLOTTED => 12-AUG-2014 | TIME PLOTTED => 08:08

Dist	COUNTY	ROUTE	POST MILES TOTAL PROJECT	SHEET No.	TOTAL SHEETS
11	SD	8	R25.9/R32.2	7	67

REGISTERED CIVIL ENGINEER 04-29-14 DATE

08-11-14
PLANS APPROVAL DATE

REGISTERED PROFESSIONAL ENGINEER OSCAR AGUILAR No. C62571 Exp. 06-30-16 CIVIL STATE OF CALIFORNIA

THE STATE OF CALIFORNIA OR ITS OFFICERS OR AGENTS SHALL NOT BE RESPONSIBLE FOR THE ACCURACY OR COMPLETENESS OF SCANNED COPIES OF THIS PLAN SHEET.

NOTES:

1. THE LIMITS OF WORK ALONG LOCAL STREETS ARE THE BEGIN/END OF CURB RETURN AND 4.0 FEET Max FROM ES OR AS SHOWN.
2. FOR EXACT LIMITS, REFER TO SUMMARY OF QUANTITIES SHEETS.

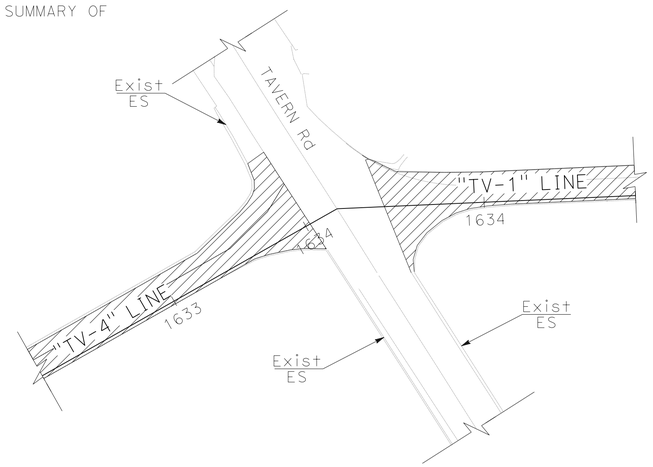

TAVERN Rd OC
NORTH SEGMENT

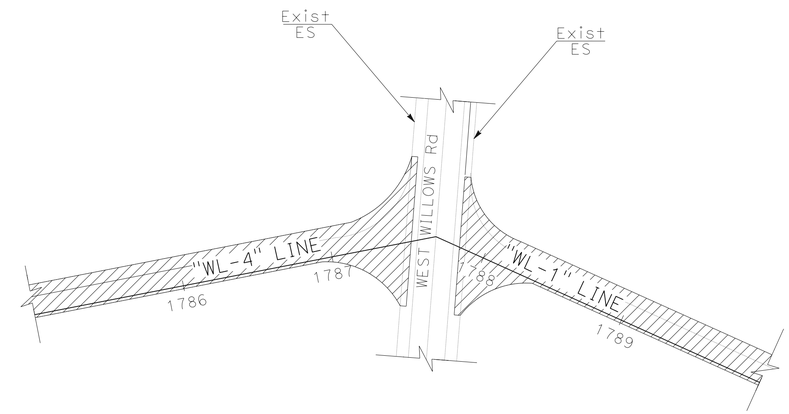

WEST WILLOWS Rd OC
NORTH SEGMENT

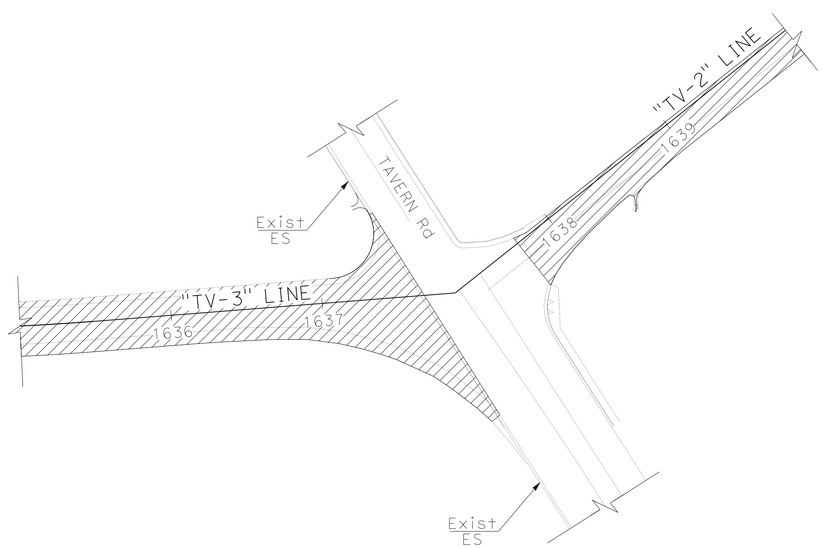

TAVERN Rd OC
SOUTH SEGMENT

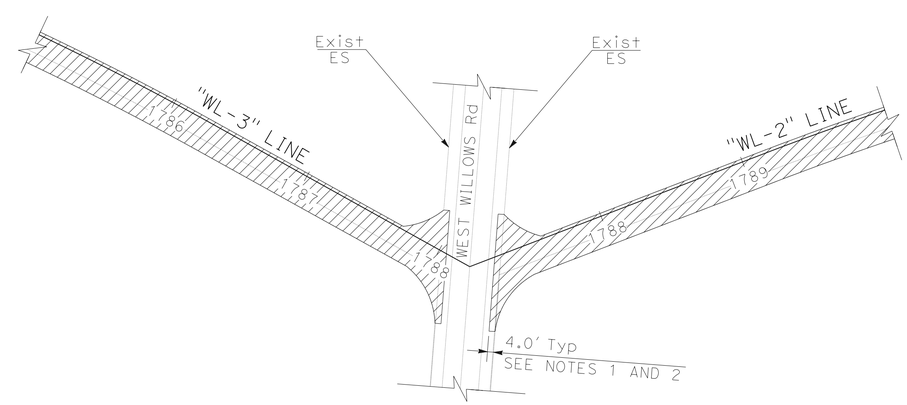

WEST WILLOWS Rd OC
SOUTH SEGMENT

TYPICAL RAMP WORK LIMITS

CONSTRUCTION DETAILS
NO SCALE

C-3

REVISED BY	DATE REVISED
THIN V BUI	OSCAR AGUILAR
CALCULATED-DESIGNED BY	CHECKED BY
FUNCTIONAL SUPERVISOR	ED HAJJ

STATE OF CALIFORNIA - DEPARTMENT OF TRANSPORTATION
Caltrans®
DESIGN

LAST REVISION 05-09-14
DATE PLOTTED => 12-AUG-2014
TIME PLOTTED => 08:08

Dist	COUNTY	ROUTE	POST MILES TOTAL PROJECT	SHEET No.	TOTAL SHEETS
11	SD	8	R25.9/R32.2	8	67

REGISTERED CIVIL ENGINEER 04-29-14 DATE

08-11-14
PLANS APPROVAL DATE

REGISTERED PROFESSIONAL ENGINEER OSCAR AGUILAR No. C62571 Exp. 06-30-16 CIVIL STATE OF CALIFORNIA

THE STATE OF CALIFORNIA OR ITS OFFICERS OR AGENTS SHALL NOT BE RESPONSIBLE FOR THE ACCURACY OR COMPLETENESS OF SCANNED COPIES OF THIS PLAN SHEET.

NOTES:

1. WHERE THE DISTANCE BETWEEN BACK OF POST AND HINGE POINT IS LESS THAN 42", CONSTRUCT VEGETATION CONTROL TO 6" FROM HINGE POINT WHILE MAINTAINING THE 8" BLOCK-OUT AT BACK OF POST. IF THE 8" BLOCK-OUT AT BACK OF POST CAN NOT BE MAINTAINED, CONSTRUCT VEGETATION CONTROL FLUSH WITH THE BACK EDGE OF POST.
2. FOR DETAILS NOT SHOWN, SEE REVISED STANDARD PLANS RSP A77L2 AND RSP A77N2.

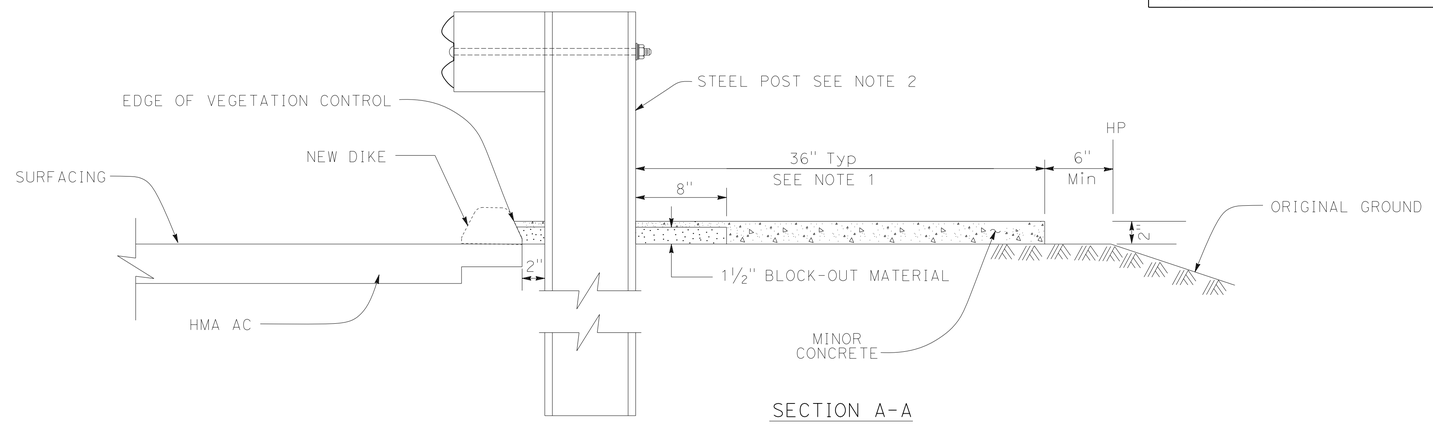

SECTION A-A

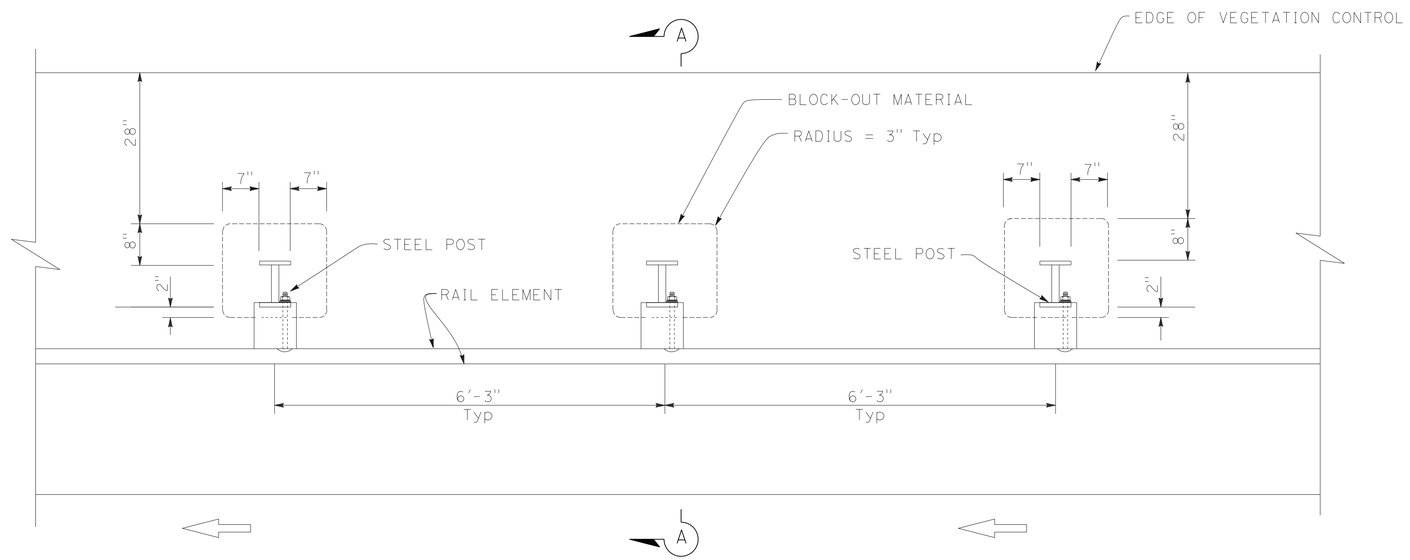

PLAN

TYPICAL VEGETATION CONTROL WHEN DIKE IS PRESENT UNDER MGS

CONSTRUCTION DETAILS
NO SCALE

C-4

STATE OF CALIFORNIA - DEPARTMENT OF TRANSPORTATION
Caltrans® DESIGN

FUNCTIONAL SUPERVISOR: ED HAJJ
CALCULATED-DESIGNED BY: THIN V BUI
CHECKED BY: OSCAR AGUILAR
REVISED BY
DATE REVISED

LAST REVISION 05-09-14
DATE PLOTTED => 12-AUG-2014
TIME PLOTTED => 08:08

Dist	COUNTY	ROUTE	POST MILES TOTAL PROJECT	SHEET No.	TOTAL SHEETS
11	SD	8	R25.9/R32.2	9	67

REGISTERED CIVIL ENGINEER 04-29-14 DATE

08-11-14
PLANS APPROVAL DATE

REGISTERED PROFESSIONAL ENGINEER OSCAR AGUILAR No. C62571 Exp. 06-30-16 CIVIL STATE OF CALIFORNIA

THE STATE OF CALIFORNIA OR ITS OFFICERS OR AGENTS SHALL NOT BE RESPONSIBLE FOR THE ACCURACY OR COMPLETENESS OF SCANNED COPIES OF THIS PLAN SHEET.

NOTE:

1. USE 15'-7½" LENGTH RAIL.

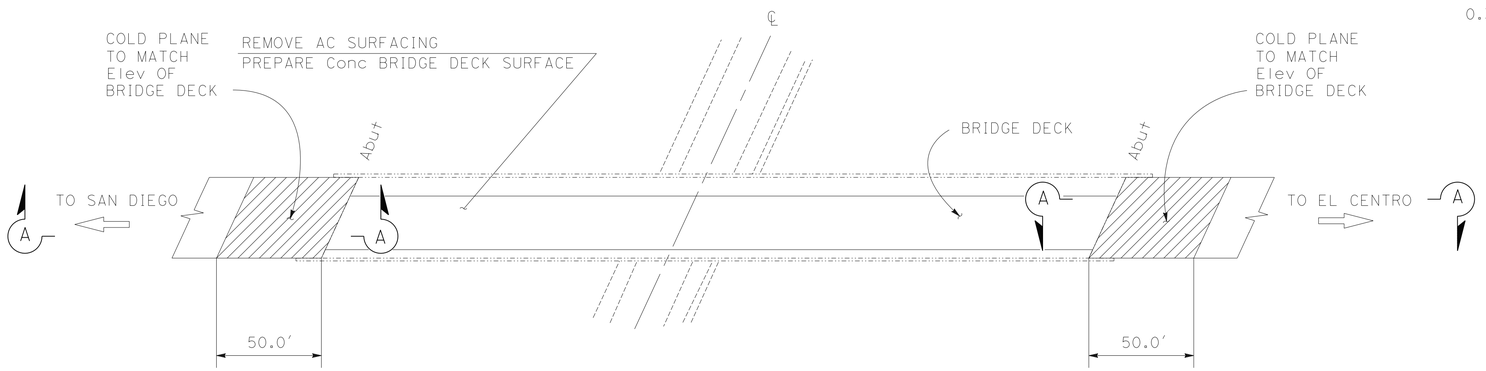

TYPICAL COLD PLANE TAPER AT Beg, END OF BRIDGE DECK FOR PEUTZ VALLEY Rd UC, EAST VICTORIA Dr UC AND VIEJAS Cr

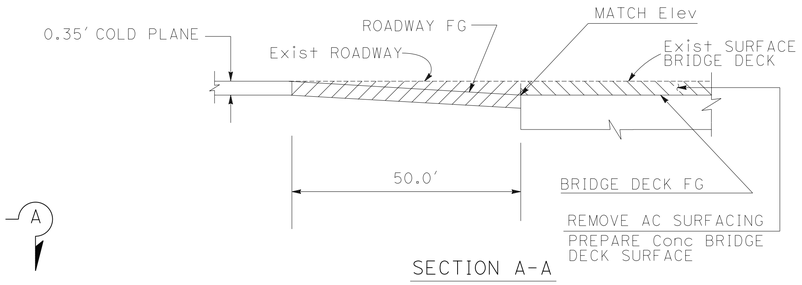

SECTION A-A

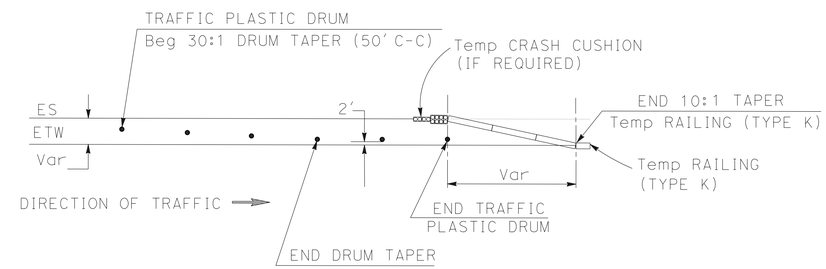

TYPICAL PLACEMENT OF TRAFFIC PLASTIC DRUM

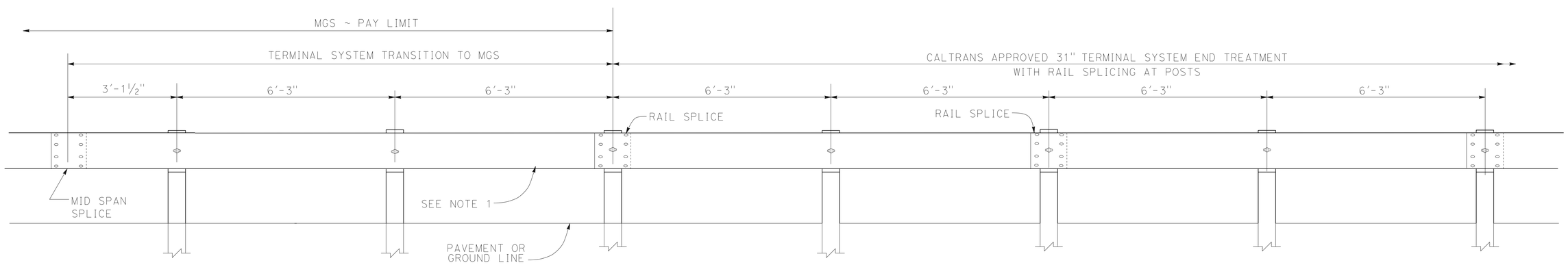

TRANSITION DETAIL FOR 31" TERMINAL SYSTEM END TREATMENT WITH RAIL SPLICING AT POSTS TO MIDWEST GUARDRAIL SYSTEM

CONSTRUCTION DETAILS
NO SCALE
C-5

STATE OF CALIFORNIA - DEPARTMENT OF TRANSPORTATION
Caltrans
DESIGN
FUNCTIONAL SUPERVISOR: ED HAJJ
CALCULATED-DESIGNED BY: THIN V BUI
CHECKED BY: OSCAR AGUILAR
REVISED BY
DATE REVISED

LAST REVISION 05-09-14
DATE PLOTTED => 12-AUG-2014
TIME PLOTTED => 08:08

Dist	COUNTY	ROUTE	POST MILES TOTAL PROJECT	SHEET No.	TOTAL SHEETS
11	SD	8	R25.9/R32.2	10	67

REGISTERED CIVIL ENGINEER 04-29-14 DATE

08-11-14
PLANS APPROVAL DATE

REGISTERED PROFESSIONAL ENGINEER
OSCAR AGUILAR
No. C62571
Exp. 06-30-16
CIVIL
STATE OF CALIFORNIA

THE STATE OF CALIFORNIA OR ITS OFFICERS OR AGENTS SHALL NOT BE RESPONSIBLE FOR THE ACCURACY OR COMPLETENESS OF SCANNED COPIES OF THIS PLAN SHEET.

LEGEND:

= CONTRACTOR USE AREA

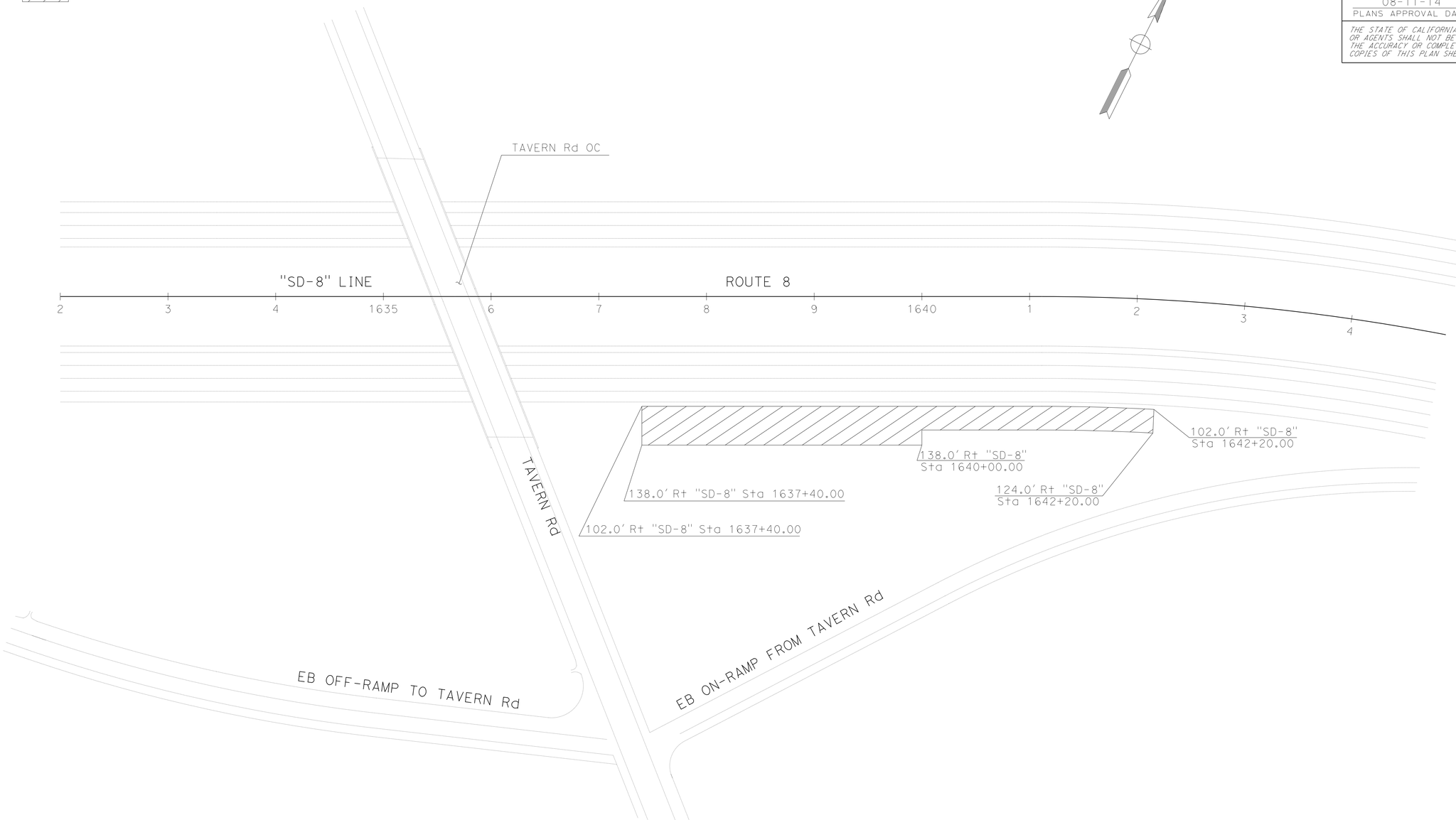

CONTRACTOR USE AREA

CONSTRUCTION DETAILS
NO SCALE

C-6

REVISED BY	DATE REVISED
THIN V BUI	OSCAR AGUILAR
CALCULATED-DESIGNED BY	CHECKED BY
FUNCTIONAL SUPERVISOR	ED HAJJ

STATE OF CALIFORNIA - DEPARTMENT OF TRANSPORTATION
Caltrans®
DESIGN

LAST REVISION 05-09-14 | DATE PLOTTED => 12-AUG-2014 | TIME PLOTTED => 08:08

Dist	COUNTY	ROUTE	POST MILES TOTAL PROJECT	SHEET No.	TOTAL SHEETS
11	SD	8	R25.9/R32.2	11	67

REGISTERED CIVIL ENGINEER 04-29-14 DATE

08-11-14
PLANS APPROVAL DATE

REGISTERED PROFESSIONAL ENGINEER OSCAR AGUILAR No. C62571 Exp. 06-30-16 CIVIL STATE OF CALIFORNIA

THE STATE OF CALIFORNIA OR ITS OFFICERS OR AGENTS SHALL NOT BE RESPONSIBLE FOR THE ACCURACY OR COMPLETENESS OF SCANNED COPIES OF THIS PLAN SHEET.

NOTE:
1. FOR ADDITIONAL OMP INLET DETAILS SEE D75A, D75C AND D77A STANDARD PLANS

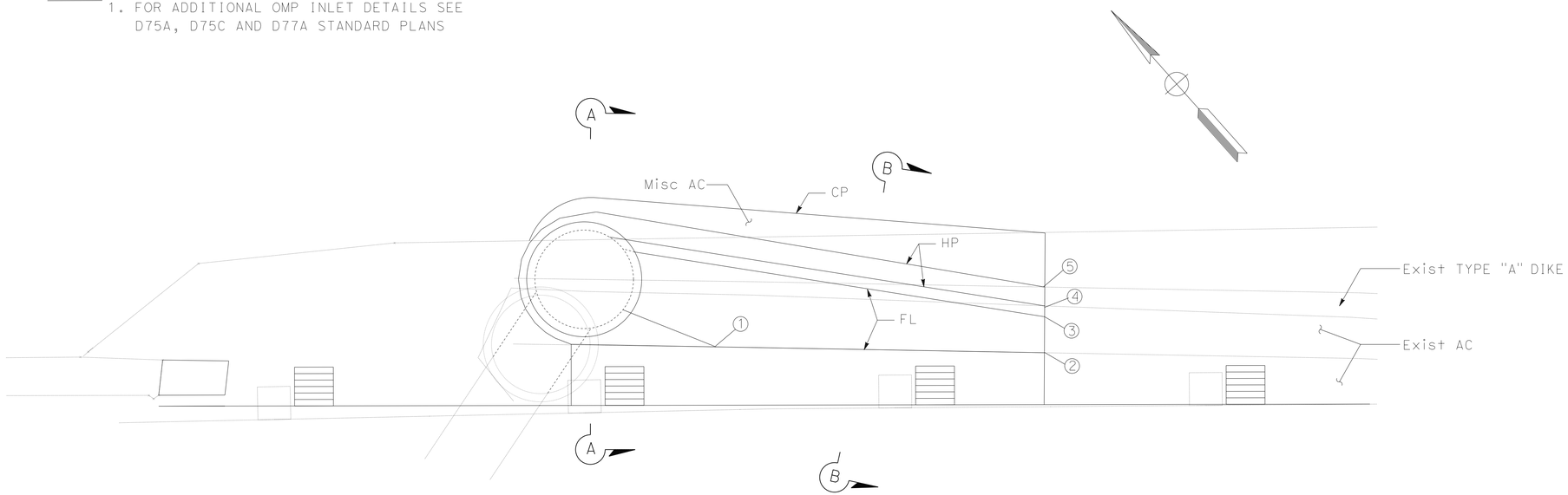

PLAN VIEW

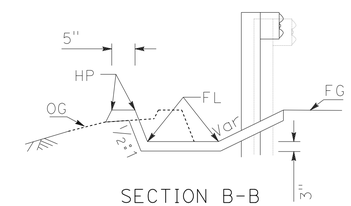

SECTION B-B

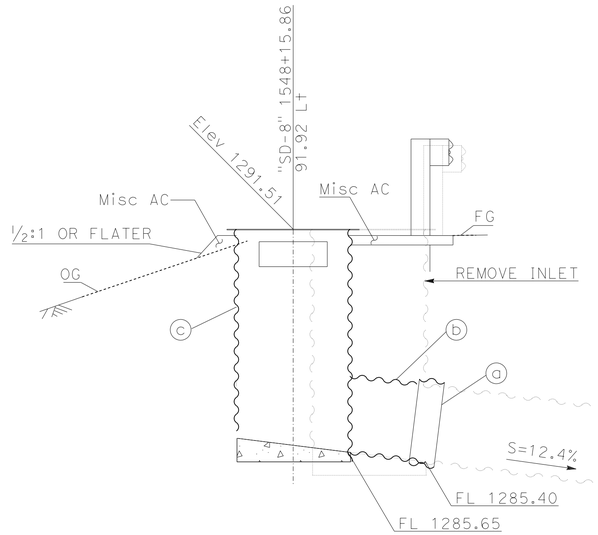

SECTION A-A

DRAINAGE SYSTEM 1

ⓐ CORRUGATED METAL PIPE COUPLING 24" Dia
ⓑ CORRUGATED STEEL PIPE 24" x 3'
ⓒ STEEL PIPE INLET TYPE OMP (H=5.9) W/COVER

No. ◯	STATION	OFFSET	Elev	NOTES
1	"SD-8" 1548+20	89.85 Lt	1290.59	FLOWLINE
2	"SD-8" 1548+30	89.71 Lt	1291.54	MATCH Exist FLOWLINE
3	"SD-8" 1548+30	90.81 Lt	1291.54	MATCH Exist FLOWLINE
4	"SD-8" 1548+30	91.14 Lt		MATCH Exist TOP OF DIKE
5	"SD-8" 1548+30	91.56 Lt		MATCH Exist TOP OF DIKE

OMP INLET RELOCATION PEUTZ VALLEY UC

APPROVED FOR DRAINAGE WORK ONLY

DRAINAGE DETAIL

NO SCALE

DD-1

STATE OF CALIFORNIA - DEPARTMENT OF TRANSPORTATION
Caltrans® DESIGN

FUNCTIONAL SUPERVISOR: ED HAJJ
CALCULATED-DESIGNED BY: OSCAR AGUILAR
CHECKED BY: THIN V BUI
REVISED BY
DATE REVISED

LAST REVISION 05-09-14
DATE PLOTTED => 12-AUG-2014
TIME PLOTTED => 08:08

Dist	COUNTY	ROUTE	POST MILES TOTAL PROJECT	SHEET No.	TOTAL SHEETS
11	SD	8	R25.9/R32.2	12	67

REGISTERED CIVIL ENGINEER 04-29-14 DATE

08-11-14
PLANS APPROVAL DATE

REGISTERED PROFESSIONAL ENGINEER OSCAR AGUILAR No. C62571 Exp. 06-30-16 CIVIL STATE OF CALIFORNIA

THE STATE OF CALIFORNIA OR ITS OFFICERS OR AGENTS SHALL NOT BE RESPONSIBLE FOR THE ACCURACY OR COMPLETENESS OF SCANNED COPIES OF THIS PLAN SHEET.

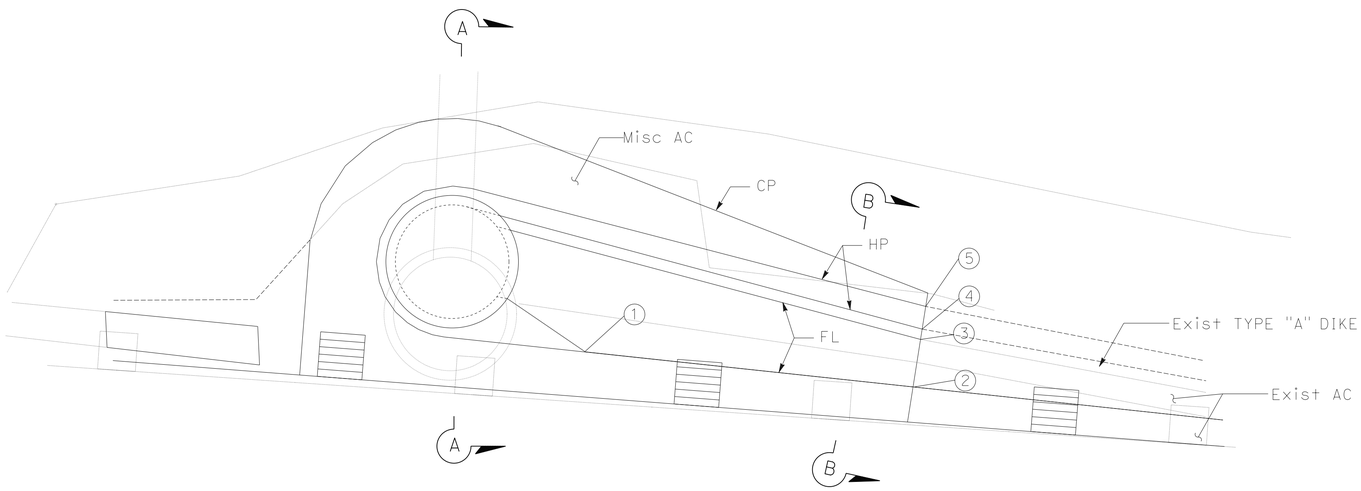

PLAN VIEW

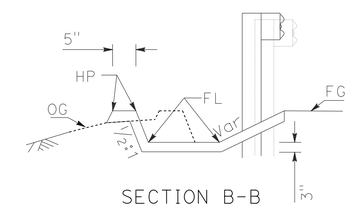

SECTION B-B

DRAINAGE SYSTEM (2)

(a) STEEL PIPE INLET TYPE OMP (H=4.0) W/COVER

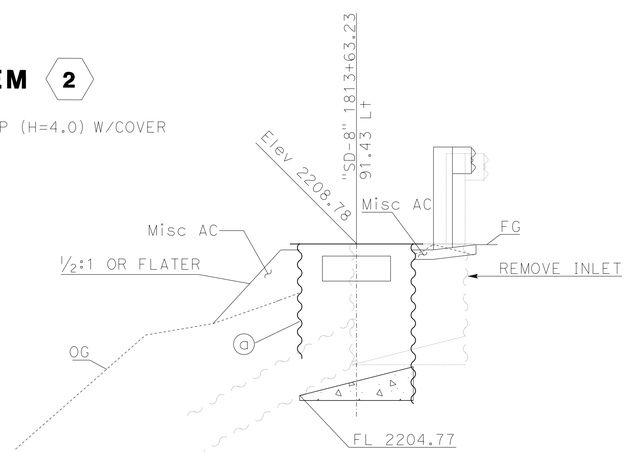

SECTION A-A

No. ◯	STATION	OFFSET	Elev	NOTES
1	"SD-8" 1813+68.00	89.43 Lt	2207.95	FLOWLINE
2	"SD-8" 1813+76.29	89.38 Lt	2208.37	FLOWLINE
3	"SD-8" 1813+76.29	90.65 Lt	2208.37	MATCH Exist FLOWLINE
4	"SD-8" 1813+84.93	90.92 Lt		MATCH Exist TOP OF DIKE
5	"SD-8" 1813+84.93	91.40 Lt		MATCH Exist TOP OF DIKE

OMP INLET RELOCATION NEAR VIEJAS CREEK BRIDGE

APPROVED FOR DRAINAGE WORK ONLY

DRAINAGE DETAIL

NO SCALE

DD-2

STATE OF CALIFORNIA - DEPARTMENT OF TRANSPORTATION
Caltrans®
DESIGN

FUNCTIONAL SUPERVISOR: ED HAJJ
CALCULATED-DESIGNED BY: OSCAR AGUILAR
CHECKED BY: THIN V BUI
REVISED BY
DATE REVISED

LAST REVISION 05-09-14
DATE PLOTTED => 12-AUG-2014
TIME PLOTTED => 08:08

Dist	COUNTY	ROUTE	POST MILES TOTAL PROJECT	SHEET No.	TOTAL SHEETS
11	SD	8	R25.9/R32.2	13	67

REGISTERED CIVIL ENGINEER 04-29-14 DATE

08-11-14
PLANS APPROVAL DATE

REGISTERED PROFESSIONAL ENGINEER OSCAR AGUILAR No. C62571 Exp. 06-30-16 CIVIL STATE OF CALIFORNIA

THE STATE OF CALIFORNIA OR ITS OFFICERS OR AGENTS SHALL NOT BE RESPONSIBLE FOR THE ACCURACY OR COMPLETENESS OF SCANNED COPIES OF THIS PLAN SHEET.

NOTE:

ALL JOINTS ARE STANDARD JOINT TYPE

DRAINAGE QUANTITIES

SHEET #	DRAINAGE SYSTEM No. ⬡	DRAINAGE UNIT No. ◯	24" BITUMINOUS COATED CORRUGATED STEEL PIPE (0.109 THICK)	36" BITUMINOUS COATED CORRUGATED STEEL PIPE INLET (0.138 THICK)	MISCELLANEOUS IRON AND STEEL	42" x1/4" CHECKERED PLATE COVER (N)	24" CORRUGATED METAL PIPE COUPLING (N)	MAXIMUM HEIGHT OF COVER (N)	HEIGHT OF INLET (N)	GRATE CHAIN (N)	MINOR CONCRETE (MINOR STRUCTURE) (*)	PLACE HOT MIX ASPHALT (Misc AREA)	MINOR HOT MIX ASPHALT (*)	DESCRIPTION	STATION	DRAINAGE SYSTEM No. ⬡	DRAINAGE UNIT No. ◯	SHEET #
			LF	LF	LB	EA	EA	LF	LF	EA	CY	SQYD	TON					
DD-1	1	a					1							CORRUGATED METAL PIPE COUPLING 24" Dia		1	a	DD-1
		b	3.0					3.9						CORRUGATED STEEL PIPE 24" x 3'			b	
		c		6.4	180	1			5.9	1	0.33	9.9	1.65	STEEL PIPE INLET TYPE OMP (H=5.9) W/COVER	"SD-8" 1548+15.86		c	
DD-2	2	a		4.5	180	1			4.0	1	0.33	9.8	1.63	STEEL PIPE INLET TYPE OMP (H=4.0) W/COVER	"SD-8" 1813+63.23	2	a	DD-2
TOTAL			3.0	10.9	360					2.0	0.66	19.7	3.28					

(N) NOT A SEPARATE ITEM, FOR INFORMATION ONLY
(*) FOR ADDITIONAL QUANTITIES, SEE SUMMARY OF QUANTITIES

STATE OF CALIFORNIA - DEPARTMENT OF TRANSPORTATION
Caltrans® DESIGN

FUNCTIONAL SUPERVISOR: ED HAJJ
CALCULATED-DESIGNED BY: OSCAR M. AGUILAR
CHECKED BY: THIN BUI
REVISED BY
DATE REVISED

DRAINAGE QUANTITIES
DQ-1

LAST REVISION 05-09-14
DATE PLOTTED => 12-AUG-2014
TIME PLOTTED => 08:08

Dist	COUNTY	ROUTE	POST MILES TOTAL PROJECT	SHEET No.	TOTAL SHEETS
11	SD	8	R25.9/R32.2	14	67

REGISTERED CIVIL ENGINEER 04-28-14 DATE

08-11-14
PLANS APPROVAL DATE

REGISTERED PROFESSIONAL ENGINEER
FARDAD BEHBOODY
No. C61478
Exp. 06-30-15
CIVIL
STATE OF CALIFORNIA

THE STATE OF CALIFORNIA OR ITS OFFICERS OR AGENTS SHALL NOT BE RESPONSIBLE FOR THE ACCURACY OR COMPLETENESS OF SCANNED COPIES OF THIS PLAN SHEET.

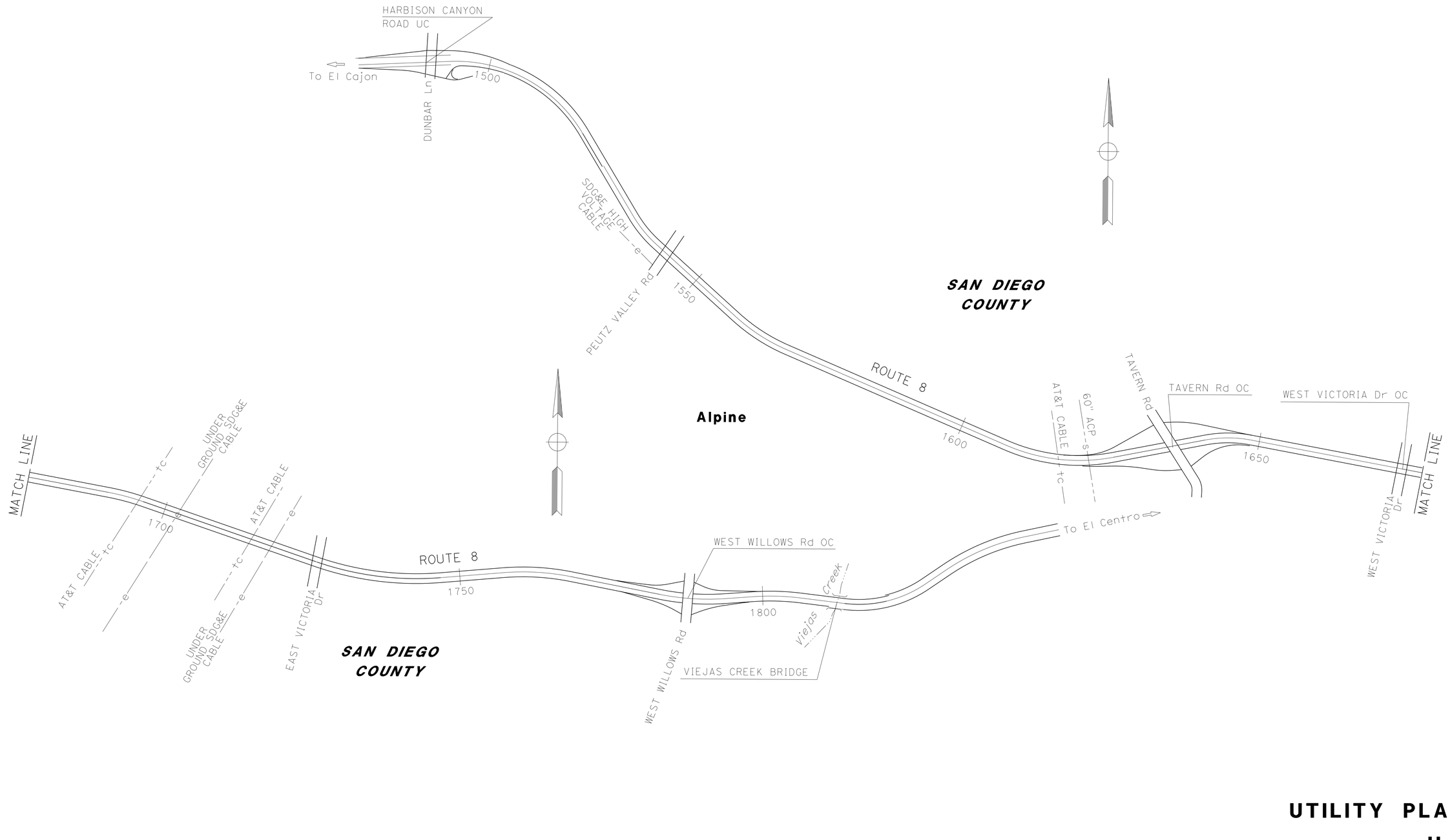

APPROVED FOR UTILITY INFORMATION ONLY

NO SCALE

UTILITY PLAN

U-1

REVISED BY	DATE REVISED
FARDAD BEHBOODY	ABU BAKR AL-JAFRI
CALCULATED-DESIGNED BY	CHECKED BY
FUNCTIONAL SUPERVISOR	ABU BAKR AL-JAFRI

STATE OF CALIFORNIA - DEPARTMENT OF TRANSPORTATION

Caltrans

UTILITY

LAST REVISION 05-09-14 | DATE PLOTTED => 12-AUG-2014 | TIME PLOTTED => 08:08

Dist	COUNTY	ROUTE	POST MILES TOTAL PROJECT	SHEET No.	TOTAL SHEETS
11	SD	8	R25.9/R32.2	15	67

REGISTERED CIVIL ENGINEER 04-29-14 DATE

08-11-14
PLANS APPROVAL DATE

REGISTERED PROFESSIONAL ENGINEER SHAHIN T. ADIBI No. 54839 Exp. 06-30-16 CIVIL STATE OF CALIFORNIA

THE STATE OF CALIFORNIA OR ITS OFFICERS OR AGENTS SHALL NOT BE RESPONSIBLE FOR THE ACCURACY OR COMPLETENESS OF SCANNED COPIES OF THIS PLAN SHEET.

NOTES:

1. EXACT LOCATION OF CONSTRUCTION AREA SIGNS WILL BE DETERMINED BY THE ENGINEER.
2. FEDERAL MANUAL ON UNIFORM TRAFFIC CONTROL DEVICES (MUTCD) SIGN CODES ARE SHOWN UNLESS DESIGNATED BY (CA), INDICATING CALIFORNIA SIGN SPECIFICATIONS ARE USED.
3. EXISTING UTILITIES ARE NOT SHOWN ON THESE PLAN SHEETS. THE CONTRACTOR SHALL VERIFY LOCATIONS OF EXISTING UTILITIES AND ADJUST THE FIELD LOCATION OF THE SIGN POSTS IN CONSULTATION WITH THE ENGINEER.

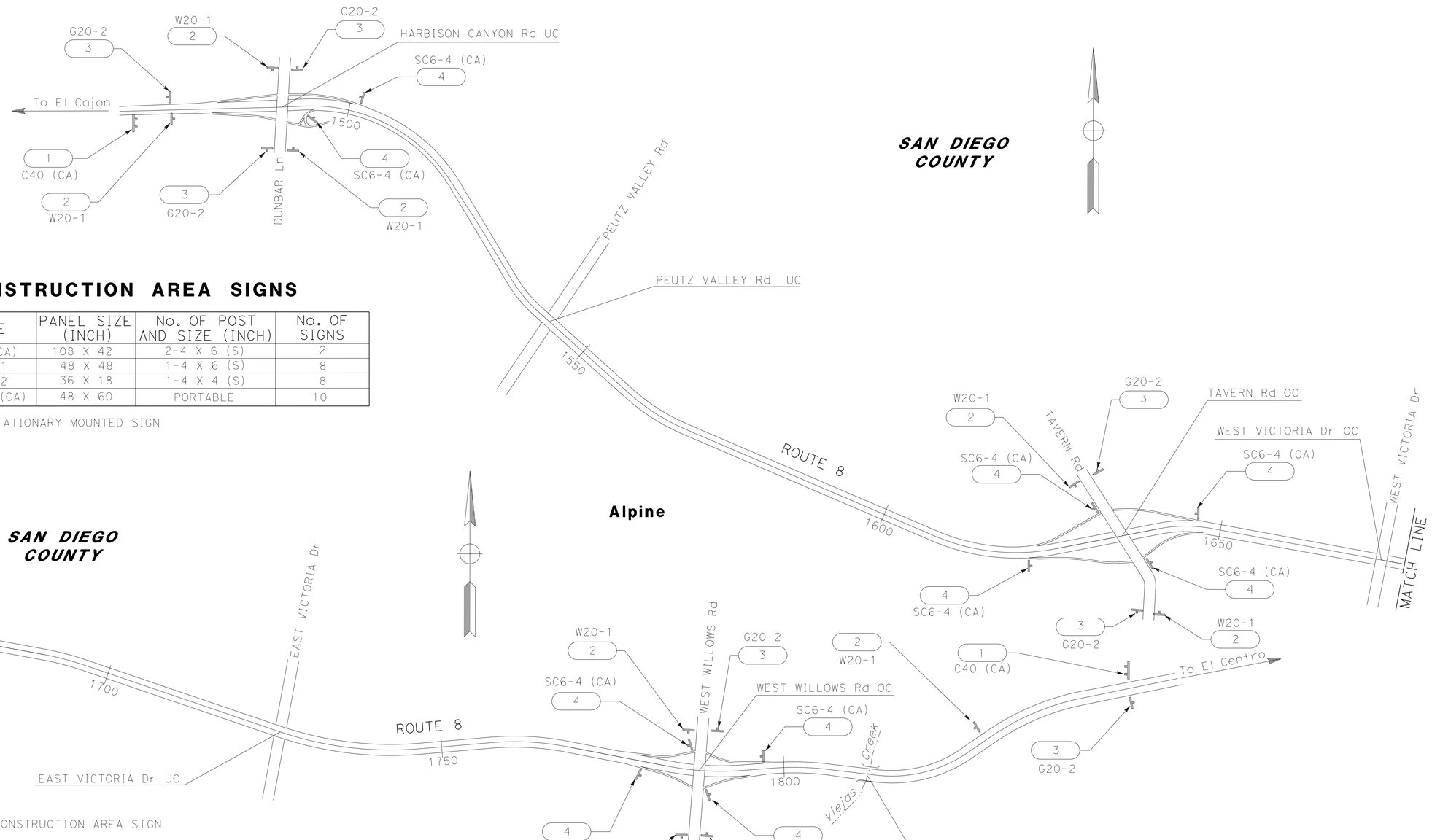

CONSTRUCTION AREA SIGNS

SIGN No.	TYPE	PANEL SIZE (INCH)	No. OF POST AND SIZE (INCH)	No. OF SIGNS
1	C40 (CA)	108 X 42	2-4 X 6 (S)	2
2	W20-1	48 X 48	1-4 X 6 (S)	8
3	G20-2	36 X 18	1-4 X 4 (S)	8
4	SC6-4 (CA)	48 X 60	PORTABLE	10

(S) DENOTES STATIONARY MOUNTED SIGN

LEGEND:

(X) = CONSTRUCTION AREA SIGN

APPROVED FOR CONSTRUCTION AREA SIGN WORK ONLY

CONSTRUCTION AREA SIGNS

NO SCALE

CS-1

REVISED BY | DATE REVISED
ROBERT EDEJER | SHAHIN ADIBI
CALCULATED-DESIGNED BY | CHECKED BY
FUNCTIONAL SUPERVISOR | CAMILLE ABOU FADEL

STATE OF CALIFORNIA - DEPARTMENT OF TRANSPORTATION
Caltrans
TRAFFIC DESIGN

LAST REVISION 05-12-14 | DATE PLOTTED => 12-AUG-2014 | TIME PLOTTED => 08:08

Dist	COUNTY	ROUTE	POST MILES TOTAL PROJECT	SHEET No.	TOTAL SHEETS
11	SD	8	R25.9/R32.2	16	67

REGISTERED CIVIL ENGINEER 04-29-14 DATE

08-11-14
PLANS APPROVAL DATE

REGISTERED PROFESSIONAL ENGINEER SHAHIN ADIBI No. 54839 Exp. 06-30-16 CIVIL STATE OF CALIFORNIA

THE STATE OF CALIFORNIA OR ITS OFFICERS OR AGENTS SHALL NOT BE RESPONSIBLE FOR THE ACCURACY OR COMPLETENESS OF SCANNED COPIES OF THIS PLAN SHEET.

DETAIL 25 Mod 1

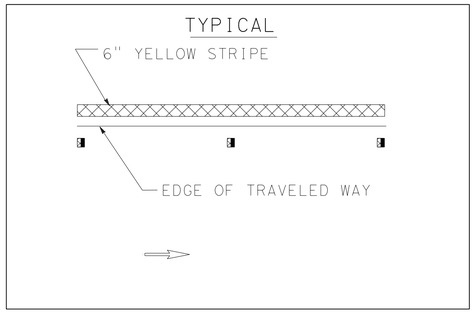

DETAIL 11/13 Mod

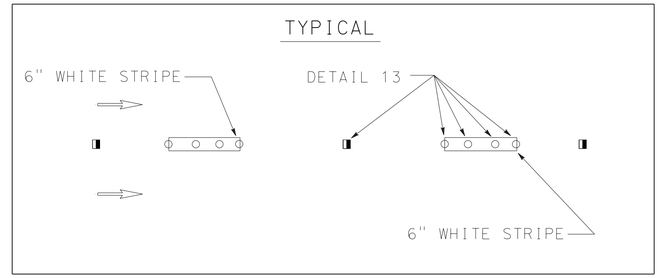

DETAIL 27B Mod 1

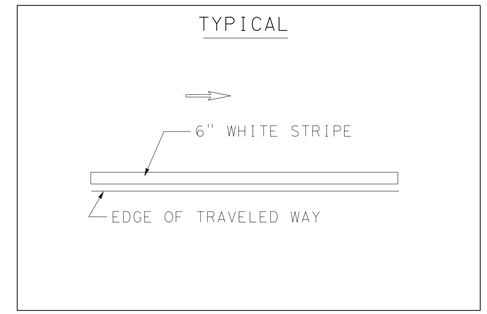

DETAIL 25 Mod 2

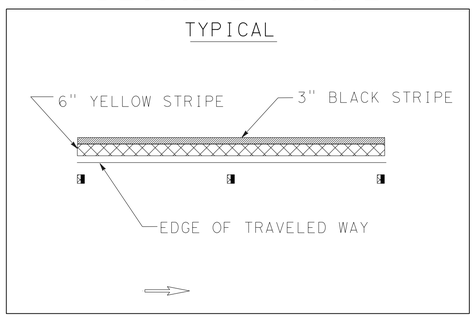

DETAIL 8/10 Mod

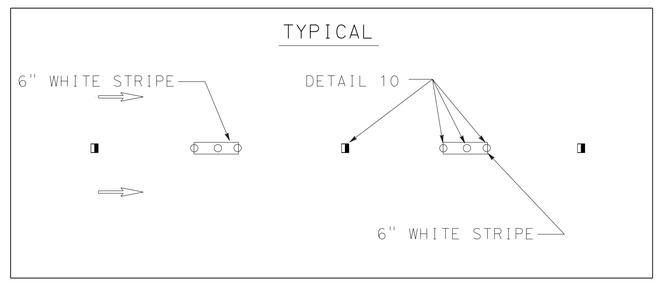

DETAIL 27B Mod 2

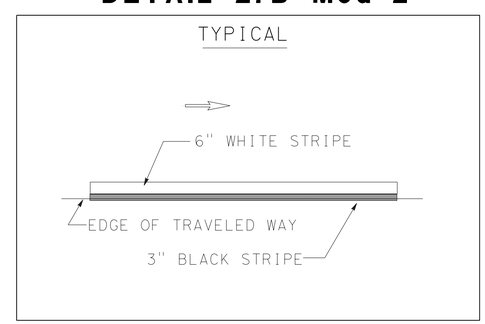

DETAIL 25A Mod

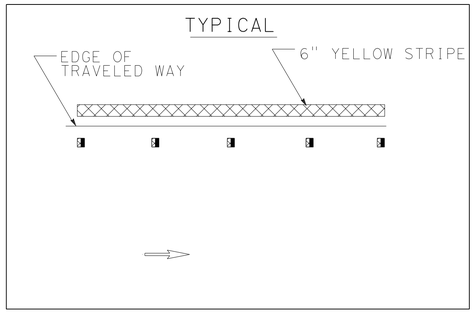

DETAIL 8 Mod

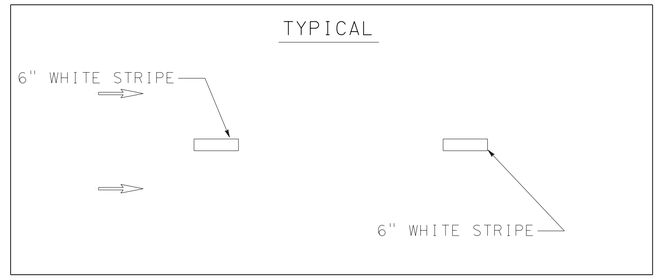

PAVEMENT DELINEATION DETAILS

NO SCALE

PDD-1

STATE OF CALIFORNIA - DEPARTMENT OF TRANSPORTATION
Caltrans®
TRAFFIC DESIGN

FUNCTIONAL SUPERVISOR: CAMILLE ABOU-FADEL
CALCULATED-DESIGNED BY: ROBERT EDEJER
CHECKED BY: SHAHIN ADIBI
REVISED BY
DATE REVISED

LAST REVISION 05-19-14
DATE PLOTTED => 12-AUG-2014
TIME PLOTTED => 08:08

Dist	COUNTY	ROUTE	POST MILES TOTAL PROJECT	SHEET No.	TOTAL SHEETS
11	SD	8	R25.9/R32.2	17	67

REGISTERED CIVIL ENGINEER 04-29-14 DATE

08-11-14
PLANS APPROVAL DATE

REGISTERED PROFESSIONAL ENGINEER SHAHIN T. ADIBI No. 54839 Exp. 06-30-16 CIVIL STATE OF CALIFORNIA

THE STATE OF CALIFORNIA OR ITS OFFICERS OR AGENTS SHALL NOT BE RESPONSIBLE FOR THE ACCURACY OR COMPLETENESS OF SCANNED COPIES OF THIS PLAN SHEET.

NOTES:

1. ALL PAVEMENT DELINEATION SHALL BE REPLACED IN KIND UNLESS INDICATED OTHERWISE.
2. ALL PAVEMENT DELINEATION SHALL BE REPLACED WITH THERMOPLASTIC (ENHANCED WET NIGHT VISIBILITY) TRAFFIC STRIPE.

PAVEMENT DELINEATION QUANTITY

LOCATION					PAVEMENT MARKER SUMMARY			TRAFFIC STRIPE SUMMARY					REMARKS
ROUTE	LINE	DIRECTION	STATION	DETAIL	NON-REFLECTIVE (EA)	RETROREFLECTIVE (EA)		PAINT (LF)	THERMOPLASTIC (LF) (ENHANCED WET NIGHT VISIBILITY)				
					TYPE A	TYPE G	TYPE H	(1-COAT)	6" SOLID	6" BROKEN	6" BROKEN	8" SOLID	
					WHITE	CLEAR	YELLOW			(36-12)	(17-7)		
8	"SD-8"	EB	1502+55 TO 1504+15	8 Mod							160		
8	"SD-8"	EB	1502+55 TO 1810+84	11/13 Mod	2,570	644				30,829			
8	"SD-8"	EB	1543+00 TO 1810+84	11/13 Mod	2,232	559				26,784			
8	"SD-8"	EB	1502+55 TO 1543+93	25 Mod 1			88		4,138				
8	"SD-8"	EB	1502+55 TO 1543+93	27B Mod 1					4,138				
8	"SD-8"	EB	1543+97 TO 1546+72	25 Mod 1			7		275				PEUTZ VALLEY Rd UC
8	"SD-8"	EB	1543+97 TO 1546+72	27B Mod 1					275				PEUTZ VALLEY Rd UC
8	"SD-8"	EB	1546+72 TO 1725+70	25 Mod 1			374		17,898				
8	"SD-8"	EB	1546+72 TO 1725+70	27B Mod 1					17,898				
8	"SD-8"	EB	1620+68 TO 1623+53	36		25						570	
8	"SD-8"	EB	1646+12 TO 1648+62	36A		23						500	
8	"SD-8"	EB	1648+62 TO 1651+12	8 Mod							250		
8	"SD-8"	EB	1725+70 TO 1726+98	25 Mod 2			4	128	128				EAST VICTORIA Dr UC
8	"SD-8"	EB	1725+70 TO 1726+98	27B Mod 2				128	128				EAST VICTORIA Dr UC
8	"SD-8"	EB	1726+98 TO 1810+84	25 Mod 1			176		8,386				
8	"SD-8"	EB	1726+98 TO 1810+84	27B Mod 1					8,386				
8	"SD-8"	EB	1776+68 TO 1779+28	36		23						520	
8	"SD-8"	EB	1794+69 TO 1797+69	36A		27						600	
8	"SD-8"	EB	1797+69 TO 1800+69	8 Mod							300		
8	"SD-8"	WB	1503+21 TO 1505+71	36		12						250	
8	"SD-8"	WB	1503+21 TO 1813+37	11/13 Mod	2,585	648				31,016			
8	"SD-8"	WB	1503+21 TO 1544+27	25 Mod 1			87		4,106				
8	"SD-8"	WB	1503+21 TO 1544+27	27B Mod 1					4,106				
8	"SD-8"	WB	1544+27 TO 1547+75	25 Mod 2			9	348	348				PEUTZ VALLEY Rd UC
8	"SD-8"	WB	1544+27 TO 1547+75	27B Mod 2				348	348				PEUTZ VALLEY Rd UC
8	"SD-8"	WB	1547+75 TO 1725+82	25 Mod 1			372		17,807				
8	"SD-8"	WB	1547+75 TO 1725+82	27B Mod 1					17,807				
8	"SD-8"	WB	1615+20 TO 1617+60	8 Mod							240		
				SUBTOTAL	7,387	1,961	1,117	952	106,172	88,629	950	2,440	
				TOTAL 1	7,387	3,078		952	106,172	88,629	950	2,440	

(N) - NOT A SEPARATE PAY ITEM. FOR INFORMATION ONLY.

PAVEMENT DELINEATION QUANTITIES

PDQ-1

REVISED BY | DATE REVISED

ROBERT EDEJER | SHAHIN T. ADIBI

CALCULATED-DESIGNED BY | CHECKED BY

FUNCTIONAL SUPERVISOR | CAMILLE ABOUFADEL

STATE OF CALIFORNIA - DEPARTMENT OF TRANSPORTATION

Caltrans® TRAFFIC DESIGN

LAST REVISION 05-19-14 | DATE PLOTTED => 12-AUG-2014 TIME PLOTTED => 08:08

Dist	COUNTY	ROUTE	POST MILES TOTAL PROJECT	SHEET No.	TOTAL SHEETS
11	SD	8	R25.9/R32.2	18	67

REGISTERED CIVIL ENGINEER 04-29-14 DATE

08-11-14
PLANS APPROVAL DATE

REGISTERED PROFESSIONAL ENGINEER SHAHIN T. ADIBI No. 54839 Exp. 06-30-16 CIVIL STATE OF CALIFORNIA

THE STATE OF CALIFORNIA OR ITS OFFICERS OR AGENTS SHALL NOT BE RESPONSIBLE FOR THE ACCURACY OR COMPLETENESS OF SCANNED COPIES OF THIS PLAN SHEET.

PAVEMENT DELINEATION QUANTITY

LOCATION					PAVEMENT MARKER SUMMARY			TRAFFIC STRIPE SUMMARY					REMARKS
ROUTE	LINE	DIRECTION	STATION	DETAIL	NON-REFLECTIVE (EA)	RETROREFLECTIVE (EA)		PAINT (LF)	THERMOPLASTIC (LF) (ENHANCED WET NIGHT VISIBILITY)				
					TYPE A	TYPE G	TYPE H	(1-COAT)	6" SOLID	6" BROKEN	6" BROKEN	8" SOLID	
					WHITE	CLEAR	YELLOW			(36-12)	(17-7)		
8	"SD-8"	WB	1617+60 TO 1620+10	36A		23						500	
8	"SD-8"	WB	1646+47 TO 1648+62	36		19						430	
8	"SD-8"	WB	1725+82 TO 1726+87	25 Mod 2			4	105	105				EAST VICTORIA Dr UC
8	"SD-8"	WB	1725+82 TO 1726+87	27B Mod 2				105	105				EAST VICTORIA Dr UC
8	"SD-8"	WB	1726+87 TO 1811+37	25 Mod 1			178		8,450				
8	"SD-8"	WB	1726+87 TO 1811+37	27B Mod 1					8,450				
8	"SD-8"	WB	1773+48 TO 1775+68	8 Mod							220		
8	"SD-8"	WB	1775+68 TO 1777+78	36A		19						420	
8	"SD-8"	WB	1797+19 TO 1799+69	36		23						500	
8	"SD-8"	WB	1811+37 TO 1813+37	25 Mod 2			6	200	200				VIEJAS CREEK BRIDGE
8	"SD-8"	WB	1811+37 TO 1813+37	27B Mod 2				200	200				VIEJAS CREEK BRIDGE
8	"TV-3"	EB	1623+53 TO 1637+65	25A Mod 1			60		1,412				OFF-RAMP TO TAVERN Rd
8	"TV-3"	EB	1623+53 TO 1637+65	27B Mod 1					1,412				OFF-RAMP TO TAVERN Rd
8	"TV-3"	EB	1635+57 TO 1637+65	38		10						208	OFF-RAMP TO TAVERN Rd
8	"TV-3"	EB	1633+97 TO 1635+57	8/10 Mod	20	5					160		OFF-RAMP TO TAVERN Rd
8	"TV-2"	EB	1637+74 TO 1646+80	25A Mod 1			39		906				ON-RAMP FROM TAVERN Rd
8	"TV-2"	EB	1637+74 TO 1646+80	27B Mod 1					906				ON-RAMP FROM TAVERN Rd
8	"WL-3"	EB	1779+28 TO 1788+00	25A Mod 1			38		872				OFF-RAMP TO WEST WILLOWS Rd
8	"WL-3"	EB	1779+28 TO 1788+00	27B Mod 1					872				OFF-RAMP TO WEST WILLOWS Rd
8	"WL-3"	EB	1787+61 TO 1788+00	36		5						78	OFF-RAMP TO WEST WILLOWS Rd
8	"WL-2"	EB	1787+29 TO 1794+69	25A Mod 1			32		740				ON-RAMP FROM WEST WILLOWS Rd
8	"WL-2"	EB	1787+29 TO 1794+69	27B Mod 1					740				ON-RAMP FROM WEST WILLOWS Rd
8	"TV-4"	WB	1620+10 TO 1634+03	25A Mod 1			60		1,393				ON-RAMP FROM TAVERN Rd
8	"TV-4"	WB	1623+53 TO 1634+03	27B Mod 1					1,050				ON-RAMP FROM TAVERN Rd
8	"TV-1"	WB	1633+34 TO 1646+47	25A Mod 1			56		1,313				OFF-RAMP TO TAVERN Rd
8	"TV-1"	WB	1633+34 TO 1646+47	27B Mod 1					1,313				OFF-RAMP TO TAVERN Rd
8	"WL-4"	WB	1777+78 TO 1787+49	25A Mod 1			42		971				ON-RAMP FROM WEST WILLOWS Rd
8	"WL-4"	WB	1777+78 TO 1787+49	27B Mod 1					971				ON-RAMP FROM WEST WILLOWS Rd
8	"WL-1"	WB	1787+87 TO 1797+19	25A Mod 1			40		932				OFF-RAMP TO WEST WILLOWS Rd
8	"WL-1"	WB	1787+87 TO 1797+19	27B Mod 1					932				OFF-RAMP TO WEST WILLOWS Rd
8	"WL-1"	WB	1787+87 TO 1788+36	36		7						98	OFF-RAMP TO WEST WILLOWS Rd
				SUBTOTAL	20	111	555	610	34,245		380	2,234	
				TOTAL 2	20	666		610	34,245		380	2,234	
				TOTAL 1	7,387	3,078		952	106,172	88,629	950	2,440	
				GRAND TOTAL	7,407	3,744		1,562	140,417	88,629	1,330	4,674	

(N) - NOT A SEPARATE PAY ITEM. FOR INFORMATION ONLY.

REVISED BY | DATE REVISED

ROBERT EDEJER | SHAHIN T. ADIBI

CALCULATED-DESIGNED BY | CHECKED BY

FUNCTIONAL SUPERVISOR | CAMILLE ABOUFADEL

STATE OF CALIFORNIA - DEPARTMENT OF TRANSPORTATION

Caltrans® TRAFFIC DESIGN

PAVEMENT DELINEATION QUANTITIES

PDQ-2

LAST REVISION 05-19-14 | DATE PLOTTED => 12-AUG-2014 TIME PLOTTED => 08:08

Dist	COUNTY	ROUTE	POST MILES TOTAL PROJECT	SHEET No.	TOTAL SHEETS
11	SD	8	R25.9/R32.2	19	67

REGISTERED CIVIL ENGINEER 04-29-14 DATE

08-11-14
PLANS APPROVAL DATE

REGISTERED PROFESSIONAL ENGINEER
SHAHIN T. ADIBI
No. 54839
Exp. 06-30-16
CIVIL
STATE OF CALIFORNIA

THE STATE OF CALIFORNIA OR ITS OFFICERS OR AGENTS SHALL NOT BE RESPONSIBLE FOR THE ACCURACY OR COMPLETENESS OF SCANNED COPIES OF THIS PLAN SHEET.

REMOVE PAINTED TRAFFIC STRIPE

ROUTE	LINE	DIRECTION	STATION	DETAIL	LF	REMARKS
8	"SD-8"	EB	1543+97 TO 1546+72	25	275	PEUTZ VALLEY Rd UC - EXISTING
8	"SD-8"	EB	1543+97 TO 1546+72	27B	275	PEUTZ VALLEY Rd UC - EXISTING
8	"SD-8"	EB	1543+97 TO 1546+72	11/13	138	PEUTZ VALLEY Rd UC - EXISTING (2 X 0.25 X LENGTH)
				TOTAL	688	

REMOVE PAVEMENT MARKER (N)

ROUTE	LINE	DIRECTION	STATION	DETAIL	EA	REMARKS
8	"SD-8"	EB	1543+97 TO 1546+72	25	7	PEUTZ VALLEY Rd UC
8	"SD-8"	EB	1543+97 TO 1546+72	11/13	59	PEUTZ VALLEY Rd UC
				TOTAL	66	

(N) - NOT A SEPARATE PAY ITEM, FOR INFORMATION ONLY.

THERMOPLASTIC CROSSWALK AND PAVEMENT MARKING (ENHANCED WET NIGHT VISIBILITY)

ROUTE	DIRECTION	DESCRIPTION	TYPE I - 24' SQFT	TYPE II (L) SQFT	TYPE III (L) SQFT	TYPE V SQFT	SIGNAL SQFT	AHEAD SQFT	STOP SQFT	12" LIMIT LINE SQFT	REMARKS
8	EB	OFF RAMP TO TAVERN Rd		135	126	33	32	31		90	
8	EB	ON RAMP FROM TAVERN Rd	31								
8	EB	OFF RAMP TO WEST WILLOWS Rd				99		31	66	53	
8	EB	ON RAMP FROM WESTWILLOWS Rd	31								
8	WB	ON RAMP FROM TAVERN Rd	93								
8	WB	OFF RAMP TO TAVERN Rd				66	32	31		58	
8	WB	ON RAMP FROM WESTWILLOWS Rd	31								
8	WB	OFF RAMP TO WEST WILLOWS Rd				99		31	66	68	
		SUBTOTAL	186	135	126	297	64	124	132	269	
		TOTAL	1,333								

PAVEMENT DELINEATION QUANTITIES

PDQ-3

REVISED BY | DATE REVISED
ROBERT EDEJER | SHAHIN T. ADIBI
CALCULATED-DESIGNED BY | CHECKED BY
FUNCTIONAL SUPERVISOR | CAMILLE ABOUFADEL

STATE OF CALIFORNIA - DEPARTMENT OF TRANSPORTATION
Caltrans® TRAFFIC DESIGN

LAST REVISION 05-12-14 | DATE PLOTTED => 12-AUG-2014 TIME PLOTTED => 08:08

Dist	COUNTY	ROUTE	POST MILES TOTAL PROJECT	SHEET No.	TOTAL SHEETS
11	SD	8	R25.9/R32.2	20	67

REGISTERED CIVIL ENGINEER 04-29-14 DATE

08-11-14
PLANS APPROVAL DATE

REGISTERED PROFESSIONAL ENGINEER OSCAR AGUILAR No. C62571 Exp. 06-30-16 CIVIL STATE OF CALIFORNIA

THE STATE OF CALIFORNIA OR ITS OFFICERS OR AGENTS SHALL NOT BE RESPONSIBLE FOR THE ACCURACY OR COMPLETENESS OF SCANNED COPIES OF THIS PLAN SHEET.

ROADWAY QUANTITIES

ROUTE	LINE DESIGNATION	DIRECTION WB	DIRECTION EB	STATION BEGIN (Sta)	STATION END (Sta)	LENGTH (N) (LF)	AVERAGE SHOULDER WIDTH (N) INSIDE (LF)	AVERAGE SHOULDER WIDTH (N) OUTSIDE (LF)	TRAVELED WAY WIDTH (N) (LF)	COLD PLANE ASPHALT CONCRETE PAVEMENT 0.35′ (SQYD)	COLD PLANE ASPHALT CONCRETE PAVEMENT 0.15′ (SQYD)	COLD PLANE ASPHALT CONCRETE PAVEMENT 0.20′ (SQYD)	HOT MIX ASPHALT (TYPE A) 0.20′ (TON)	RUBBERIZED HOT MIX ASPHALT (GAP GRADED) (*) 0.15′ (TON)	RUBBERIZED HOT MIX ASPHALT (GAP GRADED) (*) 0.20′ (TON)	TACK COAT (TON)	ASPHALTIC EMULSION (FOG SEAL COAT) (*) (TON)	SHOULDER RUMBLE STRIP (HMA GROUND - IN INDENTATIONS) INSIDE (Sta)	SHOULDER RUMBLE STRIP (HMA GROUND - IN INDENTATIONS) OUTSIDE (Sta)	NOTES
8	SD-8		EB	1502+55.00	1505+00.00	245.0	6.0	8.0	36.0	980.0	381.0		130.0	129.0		0.46	0.06	2.5	2.5	TRAVELED WAY WIDTH = 2 LANES + ON-RAMP
				1505+00.00	1532+00.00	2,700.0	7.0	10.5	24.0	7,200.0	5,250.0		960.0	1,184.0		4.01	0.88	27.0	27.0	
				1532+00.00	1543+97.00	1,197.0	10.5	10.5	24.0	3,192.0	2,794.0		426.0	570.0		1.90	0.47	12.0	12.0	
				1546+72.00	1559+00.00	1,228.0	10.0	10.0	36.0	4,912.0	2,728.0		654.0	725.0		2.52	0.45	12.3	12.3	
				1559+00.00	1587+00.00	2,800.0	10.5	10.5	36.0	11,200.0	6,534.0		1,494.0	1,685.0		5.83	1.09	28.0	28.0	
				1587+00.00	1615+00.00	2,800.0	10.0	10.5	36.0	11,200.0	6,378.0		1,494.0	1,670.0		5.79	1.06	28.0	28.0	
				1615+00.00	1643+00.00	2,800.0	10.0	9.5	36.0	11,200.0	6,067.0		1,494.0	1,640.0		5.72	1.01	28.0		
				1615+00.00	1620+68.00	568.0													5.7	
				1621+81.00	1643+00.00	2,119.0													21.2	
				1643+00.00	1648+61.00	561.0	10.0	8.0	36.0	3,007.0	1,122.0		400.0	391.0		1.41	0.19	5.6		
				1648+61.00	1652+91.00	430.0	10.0	8.0	46.0	2,960.0	860.0		394.0	363.0		1.33	0.14	4.3		
				1652+91.00	1671+00.00	1,809.0	10.0	8.0	36.0	7,999.0	3,618.0		1,066.0	1,104.0		3.90	0.60	18.1		
				1643+00.00	1647+51.00	451.0													4.5	
				1652+90.00	1671+00.00	1,810.0													18.1	
				1671+00.00	1699+00.00	2,800.0	10.0	10.0	36.0	11,200.0	6,222.0		1,494.0	1,655.0		5.76	1.04	28.0	28.0	
				1699+00.00	1725+72.00	2,672.0	10.0	10.0	36.0	10,688.0	5,938.0		1,426.0	1,579.0		5.50	0.99	26.7	26.7	
				1727+00.00	1754+00.00	2,700.0	10.5	10.5	36.0	10,800.0	6,300.0		1,440.0	1,625.0		5.63	1.05	27.0	27.0	
				1754+00.00	1776+46.00	2,246.0													22.5	
				1754+00.00	1782+00.00	2,800.0	10.0	9.5	36.0	11,200.0	6,067.0		1,494.0	1,640.0		5.72	1.01	28.0		
				1777+85.00	1782+00.00	415.0													4.2	
				1782+00.00	1796+62.00	1,462.0													14.6	
				1782+00.00	1797+69.00	1,569.0	10.0	8.5	36.0	6,969.0	3,225.0		930.0	967.0		3.42	0.54	15.7		
				1797+69.00	1801+59.00	390.0	10.0	8.5	46.0	2,687.0	801.0		358.0	331.0		1.21	0.13	3.9		
				1801+59.00	1809+00.00	741.0	10.0	8.5	36.0	3,657.0	1,523.0		488.0	492.0		1.76	0.25	7.4		
				1801+59.00	1809+00.00	741.0												7.4		
				1809+00.00	1810+84.00	184.0	8.5	10.0	36.0	736.0	378.0		98.0	106.0		0.37	0.06	1.8	1.8	
		WB		1503+21.00	1505+00.00	179.0	8.5	10.5	24.0	477.0	378.0		64.0	82.0		0.27	0.06	1.8	1.8	
				1505+00.00	1532+00.00	2,700.0	8.5	10.5	24.0	7,200.0	5,700.0		960.0	1,226.0		4.13	0.95	27.0	27.0	
				1532+00.00	1544+27.00	1,227.0	8.0	10.0	24.0	3,272.0	2,454.0		436.0	546.0		1.84	0.41	12.3	12.3	
				1547+75.00	1559+00.00	1,125.0	8.0	10.0	24.0	3,000.0	2,250.0		400.0	500.0		1.69	0.38	11.3	11.3	
				1559+00.00	1587+00.00	2,800.0	8.0	10.0	24.0	7,467.0	5,600.0		996.0	1,241.0		4.20	0.93	28.0	28.0	
				1587+00.00	1615+00.00	2,800.0	8.0	10.0	24.0	7,467.0	5,600.0		996.0	1,241.0		4.20	0.93	28.0	28.0	
				1615+00.00	1643+00.00	2,800.0	8.0	8.5	24.0	7,467.0	5,133.0		996.0	1,197.0		4.08	0.86	28.0		
				1615+00.00	1617+60.00	260.0													2.6	
				1622+10.00	1643+00.00	2,090.0													20.9	
				1643+00.00	1646+83.00	383.0													3.8	
				1643+00.00	1671+00.00	2,800.0	8.0	9.0	24.0	7,467.0	5,289.0		996.0	1,211.0		4.12	0.88	28.0		
				1648+61.00	1671+00.00	2,239.0													22.4	
									SUBTOTAL Q-1	165,604.0	98,590.0	0.0	22,084.0	25,100.0	0.0	86.77	16.42	476.1	442.2	

NOTES:

(N) = NOT A SEPARATE PAY ITEM, FOR INFORMATION ONLY
(*) = FOR ADDITIONAL QUANTITIES, SEE DIKE QUANTITIES TABLE

SUMMARY OF QUANTITIES
Q-1

STATE OF CALIFORNIA - DEPARTMENT OF TRANSPORTATION
Caltrans DESIGN

REVISED BY | DATE REVISED
THIN V BUI | OSCAR AGUILAR
CALCULATED-DESIGNED BY | CHECKED BY
FUNCTIONAL SUPERVISOR: ED HAJJ

LAST REVISION 05-12-14 | DATE PLOTTED => 12-AUG-2014 | TIME PLOTTED => 08:08

Dist	COUNTY	ROUTE	POST MILES TOTAL PROJECT	SHEET No.	TOTAL SHEETS
11	SD	8	R25.9/R32.2	21	67

REGISTERED CIVIL ENGINEER 04-29-14 DATE

08-11-14
PLANS APPROVAL DATE

REGISTERED PROFESSIONAL ENGINEER OSCAR AGUILAR No. C62571 Exp. 06-30-16 CIVIL STATE OF CALIFORNIA

THE STATE OF CALIFORNIA OR ITS OFFICERS OR AGENTS SHALL NOT BE RESPONSIBLE FOR THE ACCURACY OR COMPLETENESS OF SCANNED COPIES OF THIS PLAN SHEET.

ROADWAY QUANTITIES

ROUTE	LINE DESIGNATION	DIRECTION		STATION		LENGTH	AVERAGE SHOULDER WIDTH (N)		TRAVELED WAY WIDTH (N)	COLD PLANE ASPHALT CONCRETE PAVEMENT			HOT MIX ASPHALT (TYPE A)	RUBBERIZED HOT MIX ASPHALT (GAP GRADED) (*)		TACK COAT	ASPHALTIC EMULSION (FOG SEAL COAT) (*)	SHOULDER RUMBLE STRIP (HMA GROUND - IN INDENTATIONS)		NOTES
				BEGIN	END	(N)	INSIDE	OUTSIDE		0.35′	0.15′	0.20′	0.20′	0.15′	0.20′			INSIDE	OUTSIDE	
		WB	EB	(Sta)	(Sta)	(LF)	(LF)	(LF)	(LF)	(SQYD)	(SQYD)	(SQYD)	(TON)	(TON)	(TON)	(TON)	(TON)	(Sta)	(Sta)	
8	SD-8	WB		1671+00.00	1699+00.00	2,800.0	8.0	10.0	24.0	7,467.0	5,600.0		996.0	1,241.0		4.20	0.93	28.0	28.0	
				1699+00.00	1725+87.00	2,687.0	8.0	10.0	24.0	7,165.0	5,374.0		956.0	1,191.0		4.03	0.90	26.9	26.9	
				1726+91.00	1727+00.00	9.0	8.0	10.0	24.0	24.0	18.0		4.0	4.0		0.01	0.00	0.1	0.1	
				1727+00.00	1754+00.00	2,700.0	8.0	11.0	24.0	7,200.0	5,700.0		960.0	1,226.0		4.13	0.95	27.0	27.0	
				1754+00.00	1775+68.00	2,168.0													21.7	
				1754+00.00	1782+00.00	2,800.0	8.0	10.0	24.0	7,467.0	5,600.0		996.0	1,241.0		4.20	0.93	28.0		
				1777+07.00	1782+00.00	493.0													4.9	
				1782+00.00	1798+17.00	1,617.0													16.2	
				1782+00.00	1809+00.00	2,700.0	8.0	9.5	24.0	7,200.0	5,250.0		960.0	1,184.0		4.01	0.88	27.0		
				1799+68.00	1809+00.00	932.0													9.3	
				1809+00.00	1811+37.00	237.0	7.5	10.5	24.0	632.0	475.0		84.0	107.0		0.36	0.08	2.4	2.4	
	TV-3		EB	1620+68.00	1637+65.00	1,697.0	2.0	8.5	20.0		5,751.0			547.0		1.44	0.33			EB OFF TO TAVERN ROAD
	TV-2			1637+74.00	1643+27.00	553.0	2.0	8.5	12.0		1,382.0			131.0		0.35	0.11			EB ON FROM TAVERN ROAD
	TV-2			1643+27.00	1652+91.00	535.0	2.0	8.0	12.0		1,308.0			125.0		0.33	0.10			EB ON FROM TAVERN ROAD
	WL-3			1776+44.00	1782+00.00	556.0	3.0	8.0	12.0		1,420.0			135.0		0.36	0.11			EB OFF TO WEST WILLOW ROAD
	WL-3			1782+00.00	1788+00.00	600.0	3.0	8.5	12.0		1,567.0			148.0		0.39	0.13			EB OFF TO WEST WILLOW ROAD
	WL-2			1787+29.00	1801+59.00	1,040.0	3.0	8.5	12.0		2,716.0			256.0		0.68	0.22			EB ON FROM WEST WILLOW ROAD
	TV-4	WB		1617+60.00	1634+03.00	1,643.0	3.0	9.0	12.0		4,382.0			418.0		1.10	0.37			WB ON FROM TAVERN ROAD
	TV-1			1633+34.00	1642+59.00	925.0	3.0	8.0	12.0		2,363.0			226.0		0.59	0.19			WB OFF TO TAVERN ROAD
	TV-1			1642+59.00	1648+62.00	603.0	3.0	8.5	12.0		1,575.0			150.0		0.39	0.13			WB OFF TO TAVERN ROAD
	WL-4			1775+68.00	1782+00.00	632.0	3.0	8.0	12.0		1,616.0			154.0		0.40	0.13			WB ON FROM WEST WILLOW ROAD
	WL-4			1782+00.00	1787+49.00	549.0	4.0	8.5	12.0		1,495.0			142.0		0.37	0.13			WB ON FROM WEST WILLOW ROAD
	WL-1			1787+87.00	1793+31.00	544.0	2.0	8.0	12.0		1,330.0			125.0		0.33	0.10			WB OFF TO WEST WILLOW ROAD
				1793+31.00	1797+59.00	428.0	2.0	11.3	12.0		666.0	537.0		65.0	80.0	0.30	0.11			WB OFF TO WEST WILLOW ROAD
				1797+59.00	1799+68.00	209.0	2.0	8.0	12.0		511.0			50.0		0.13	0.04			WB OFF TO WEST WILLOW ROAD
SUBTOTAL Q-2										37,155.0	56,099.0	537.0	4,956.0	8,866.0	80.0	28.10	6.87	139.4	136.5	
SUBTOTAL Q-1										165,604.0	98,590.0	0.0	22,084.0	25,100.0	0.0	86.77	16.42	476.1	442.2	
TOTAL										357,985.0			27,040.0	34,046.0		114.87	23.29	1,194.2		

NOTES:

(N) = NOT A SEPARATE PAY ITEM, FOR INFORMATION ONLY
(*) = FOR ADDITIONAL QUANTITIES, SEE DIKE QUANTITIES TABLE

SUMMARY OF QUANTITIES
Q-2

REVISED BY | DATE REVISED
THIN V BUI | OSCAR AGUILAR
CALCULATED-DESIGNED BY | CHECKED BY
FUNCTIONAL SUPERVISOR | ED HAJJ
STATE OF CALIFORNIA - DEPARTMENT OF TRANSPORTATION
Caltrans
DESIGN

LAST REVISION 05-12-14 | DATE PLOTTED => 12-AUG-2014 | TIME PLOTTED => 08:08

Dist	COUNTY	ROUTE	POST MILES TOTAL PROJECT	SHEET No.	TOTAL SHEETS
11	SD	8	R25.9/R32.2	22	67

REGISTERED CIVIL ENGINEER 04-29-14 DATE

08-11-14
PLANS APPROVAL DATE

REGISTERED PROFESSIONAL ENGINEER OSCAR AGUILAR No. C62571 Exp. 06-30-16 CIVIL STATE OF CALIFORNIA

THE STATE OF CALIFORNIA OR ITS OFFICERS OR AGENTS SHALL NOT BE RESPONSIBLE FOR THE ACCURACY OR COMPLETENESS OF SCANNED COPIES OF THIS PLAN SHEET.

GUARD RAILING

MGS No.	ROUTE	LINE DESIGNATION	DIRECTION	STATION FROM	STATION TO	MGS LAYOUT TYPE (N) TYPE	MGS TANGENT OFFSET FROM ES (N) ** (LF)	POST LENGTH (N) (LF)	REMOVE GUARDRAIL (LF)	TREATED WOOD WASTE (LB)	MIDWEST GUARDRAIL SYSTEM (STEEL POST) (LF)	MIDWEST GUARDRAIL SYSTEM (8' STEEL POST) (LF)	ALTERNATIVE FLARED TERMINAL SYSTEM (EA)	ALTERNATIVE IN-LINE TERMINAL SYSTEM (EA)	BURIED POST END ANCHOR (N) (EA)	Trans RAILING (TYPE WB-31) (EA)	END ANCHOR ASSEMBLY (TYPE SFT) (EA)	GUARD RAILING DELINEATOR (EA)*	MINOR Conc (MINOR STRUCTURE) (CY)***	VEGETATION CONTROL (MINOR Conc) (SQYD)	COMMENTS
1	8	"SD-8"	EB	1534+65.00	1543+60.00	12B		8	835.0	16,642.4		895.0	1.0			1.0		5.0		297.0	EB OUTSIDE Shld AT APPROACH OF PEUTZ VALLEY UC
2				1540+83.00	1543+83.00	12C		6	85.0	1,694.1	300.0				1.0	1.0		2.0		123.0	EB INSIDE Shld AT APPROACH OF PEUTZ VALLEY UC
3				1546+84.00	1548+84.00	12DD		8				200.0					1.0	1.0		60.0	EB OUTSIDE Shld AT DEPARTURE OF PEUTZ VALLEY UC
4				1607+28.00	1626+78.00	11B		6	1,800.0	35,875.8	1,950.0		1.0				1.0	10.0		609.0	EB OUTSIDE Shld APPROACHING & INTO TAVERN Rd OFF-RAMP
5				1634+23.00	1635+73.00	16B		6	80.0	1,594.5	150.0		1.0				1.0	1.0		77.0	EB MEDIAN UNDER BRIDGE OF TAVERN Rd OC
6				1635+44.00	1636+19.00	16B		6	75.0	1,494.8	60.0		1.0				1.0	1.0		50.0	EB OUTSIDE Shld UNDER BRIDGE OF TAVERN Rd OC
7				1672+38.00	1673+88.00	16B		6			150.0		1.0				1.0	1.0		77.0	EB MEDIAN UNDER BRIDGE OF WEST VICTORIA Dr OC
8				1677+45.00	1697+95.00	11C		8	2,015.0	40,161.0		2,050.0			1.0		1.0	11.0		607.0	EB OUTSIDE Shld BETWEEN W VICTORIA OC & E VICTORIA UC
9				1721+57.00	1725+57.00	12B		6	100.0	1,993.1	400.0		1.0			1.0		2.0		151.0	EB INSIDE Shld AT APPROACH OF E VICTORIA Dr UC
10				1724+27.00	1725+62.00	12A		8	80.0	1,594.5		135.0		1.0		1.0		1.0	0.7	62.0	EB OUTSIDE Shld AT APPROACH OF E VICTORIA Dr UC
11				1787+01.00	1787+86.00	16B		6	75.0	1,494.8	85.0		1.0				1.0	1.0		57.0	EB OUTSIDE Shld UNDER BRIDGE OF W WILLOWS Rd OC
12				1785+19.00	1787+69.00	16B	10.0	6	80.0	1,594.5	250.0		1.0				1.0	2.0		106.0	EB MEDIAN UNDER BRIDGE OF W WILLOWS Rd OC
13				1807+10.00	1810+60.00	12B		6	100.0	1,993.1	350.0		1.0			1.0		2.0		136.0	EB INSIDE Shld AT APPROACH OF VIEJAS CREEK Br
14				1809+29.00	1810+64.00	12A		8	65.0	1,295.5		135.0		1.0		1.0		1.0	0.7	62.0	EB OUTSIDE Shld AT APPROACH OF VIEJAS CREEK Br
15			WB	1539+81.00	1544+19.00	12DD		8	430.0	8,570.3		438.0					1.0	3.0	0.7	130.0	WB OUTSIDE Shld AT DEPARTURE OF PEUTZ VALLEY UC
16				1547+86.00	1549+86.00	12B		6	100.0	1,993.1	200.0		1.0			1.0		1.0	0.8	91.0	WB INSIDE Shld AT APPROACH OF PEUTZ VALLEY UC
17				1547+93.00	1551+43.00	12A		6	200.0	3,986.2	350.0			1.0		1.0		2.0	0.8	126.0	WB OUTSIDE Shld AT APPROACH OF PEUTZ VALLEY UC
18				1635+18.00	1635+68.00	16B		6	50.0	996.6	50.0		1.0				1.0	1.0		47.0	WB OUTSIDE Shld UNDER BRIDGE OF TAVERN Rd OC
19				1635+48.00	1637+98.00	16B	10.0	6	80.0	1,594.5	250.0		1.0				1.0	2.0		106.0	WB MEDIAN UNDER BRIDGE OF TAVERN Rd OC
20				1645+12.00	1649+62.00	11B		6	300.0	5,979.3	450.0		1.0				1.0	3.0		165.0	WB OUTSIDE Shld APPROACHING & INTO TAVERN Rd OFF-RAMP
21				1673+55.00	1676+05.00	16B	15.0	6	80.0	1,594.5	250.0		1.0				1.0	2.0		106.0	WB MEDIAN UNDER BRIDGE OF WEST VICTORIA Dr OC
22				1679+47.00	1699+12.00	11B		8	1,915.0	38,167.9		1,965.0	1.0				1.0	10.0		614.0	WB OUTSIDE Shld BETWEEN W VICTORIA OC & E VICTORIA UC
23				1726+96.00	1730+96.00	12B		6	95.0	1,893.4	400.0		1.0			1.0		2.0	0.7	151.0	WB INSIDE Shld AT APPROACH OF E VICTORIA Dr UC
24				1727+00.00	1729+50.00	12C		6	115.0	2,292.1	250.0				1.0	1.0		2.0	0.7	74.0	WB OUTSIDE Shld AT APPROACH OF E VICTORIA Dr UC
25				1787+68.00	1790+18.00	16B	10.0	6	80.0	1,594.5	250.0		1.0				1.0	2.0		106.0	WB MEDIAN UNDER BRIDGE OF W WILLOWS Rd OC
26				1787+56.00	1788+41.00	16B		6	75.0	1,494.8	85.0		1.0				1.0	1.0		57.0	WB OUTSIDE Shld UNDER BRIDGE W WILLOWS Rd OC
27				1813+30.00	1816+80.00	12B		6	100.0	1,993.1	350.0		1.0			1.0		2.0	0.8	136.0	WB INSIDE Shld AT APPROACH OF VIEJAS CREEK Br
28				1813+51.00	1836+16.00	12C		8	2,100.0	41,855.1		2,265.0			1.0	1.0		12.0	0.7	671.0	WB OUTSIDE Shld AT APPROACH OF VIEJAS CREEK Br
TOTAL									11,110.0	221,433.5	6,580.0	8,083.0	19.0	3.0	4.0	12.0	16.0	86.0	6.6	5,054.0	

(N) = NOT A SEPARATE PAY ITEM, FOR INFORMATION ONLY
* DELINEATORS TO BE SPACED 200 LF APART
** FOR DIMENSIONS NOT LISTED, REFER TO STANDARD PLANS.
*** FOR ADDITIONAL QUANTITIES, SEE DRAINAGE QUANTITIES

Temp TRAFFIC CONTROL

STRUCTURE	LINE	LOCATION BEGIN (Sta)	LOCATION END (Sta)	DIRECTION	SIDE	Temp RAILING (TYPE K) (LF)	OBJECT MARKER (TYPE P) (EA)	Temp CRASH CUSHION MODULE (EA)	TRAFFIC PLASTIC DRUM (EA)
PEUTZ VALLEY UC Br 57-528	"SD-8"	1543+59.00	1544+59.00	WB	OUTSIDE	100.0	1.0	14.0	6.0
		1547+26.00	1548+26.00	WB	INSIDE	100.0	1.0	14.0	6.0
		1547+33.00	1548+33.00	WB	OUTSIDE	100.0	1.0	14.0	6.0
EAST VICTORIA UC Br 57-600		1725+32.00	1726+32.00	EB	OUTSIDE	100.0	1.0	14.0	6.0
		1726+36.00	1727+36.00	WB	INSIDE	100.0	1.0	14.0	6.0
		1726+40.00	1727+40.00	WB	OUTSIDE	100.0	1.0	14.0	6.0
VIEJAS CREEK Br 57-19		1810+44.00	1811+44.00	EB	OUTSIDE	100.0	1.0	14.0	6.0
		1812+70.00	1813+70.00	WB	INSIDE	100.0	1.0	14.0	6.0
		1812+92.00	1813+92.00	WB	OUTSIDE	100.0	1.0	14.0	6.0
					TOTAL	900.0	9.0	126.0	54.0

SUMMARY OF QUANTITIES
Q-3

REVISED BY | DATE REVISED
QUAN TON | OSCAR AGUILAR
CALCULATED-DESIGNED BY | CHECKED BY
FUNCTIONAL SUPERVISOR | ED HAJJ
STATE OF CALIFORNIA - DEPARTMENT OF TRANSPORTATION
Caltrans® DESIGN

LAST REVISION 05-12-14 | DATE PLOTTED => 12-AUG-2014 | TIME PLOTTED => 08:08

Dist	COUNTY	ROUTE	POST MILES TOTAL PROJECT	SHEET No.	TOTAL SHEETS
11	SD	8	R25.9/R32.2	23	67

REGISTERED CIVIL ENGINEER 04-29-14 DATE

08-11-14
PLANS APPROVAL DATE

REGISTERED PROFESSIONAL ENGINEER OSCAR AGUILAR No. C62571 Exp. 06-30-16 CIVIL STATE OF CALIFORNIA

THE STATE OF CALIFORNIA OR ITS OFFICERS OR AGENTS SHALL NOT BE RESPONSIBLE FOR THE ACCURACY OR COMPLETENESS OF SCANNED COPIES OF THIS PLAN SHEET.

DIKE QUANTITIES

Rte	LINE DESIGNATION	DIRECTION	STATION		SHOULDER		REMOVE AC DIKE		ROADWAY Exc	PLACE HMA DIKE					MINOR HMA	RHMA (GAP GRADED)	IMPORTED BORROW	ASPHALTIC EMULSION (FOG SEAL COAT)
			FROM	TO	INSIDE	OUTSIDE	TYPE	(LF)	(CY)	(TYPE A) (LF)	(TYPE C) (LF)	(TYPE D) (LF)	(TYPE E) (LF)	(TYPE F) (LF)	(TON)(*)(*)	(TON)(*)	(CY)	(TON)(*)
8	"SD-8"	EB	1502+55.00	1519+00.00		X	A	1,645.0	8.4	1,645.0					44.4	15.9	30.5	0.03
			1519+00.00	1523+42.00		X	A	442.0					442.0		11.5	6.2	5.5	0.02
			1543+00.00	1543+60.00		X	F	60.0	0.2					60.0	0.8	0.4	0.7	0.01
			1547+37.00	1548+84.00		X	E	147.0	0.5					147.0	1.9	1.0	1.8	0.01
			1548+84.00	1557+09.00		X	E	825.0	6.1				825.0		21.5	11.6	10.2	0.03
			1568+23.00	1592+85.00		X	E	2,462.0	18.2				2,462.0		64.0	34.7	30.4	0.07
			1593+35.00	1606+52.00		X	E	1,317.0	9.8				1,317.0		34.2	18.5	16.3	0.04
			1627+29.00	1646+96.00		X	E	1,967.0										
			1627+29.00	1634+64.00		X			5.4				735.0		19.1	10.3	9.1	0.02
			1634+64.00	1635+44.00		X			0.3		80.0				0.6	0.6	0.5	0.01
			1635+44.00	1636+19.00		X			0.3					75.0	1.0	0.5	0.9	0.01
			1636+19.00	1646+96.00		X			8.0				1,077.0		28.0	15.2	13.3	0.03
			1648+61.00	1676+98.00		X	E	2,837.0	21.0				2,837.0		73.8	39.9	35.0	0.08
			1676+98.00	1677+45.00		X	E	47.0	0.2					47.0	0.6	0.3	0.6	0.01
			1677+45.00	1692+68.00		X	F	1,523.0	5.6					1,523.0	20.1	10.7	18.8	0.02
			1693+00.00	1697+95.00		X	F	495.0	1.8					495.0	6.5	3.5	6.1	0.01
			1697+95.00	1710+60.00		X	E	1,265.0	9.4				1,265.0		32.9	17.8	15.6	0.04
			1710+73.00	1724+73.00		X	E	1,400.0										
			1724+73.00	1724+85.00		X	C	12.0										
			1710+73.00	1723+52.00		X			9.5				1,279.0		33.3	18.0	15.8	0.04
			1723+52.00	1724+85.00		X			0.5		133.0				1.0	0.9	0.8	0.01
			1748+68.00	1776+68.00		X	E	2,800.0	20.7				2,800.0		72.8	39.4	34.6	0.07
			1797+69.00	1803+69.00		X	A	600.0										
			1803+69.00	1809+69.00		X	E	600.0										
			1809+69.00	1810+24.00		X	C	55.0										
			1810+24.00	1810+64.00		X	F	40.0										
			1797+69.00	1798+43.00		X			0.9			74.0			4.3	1.7	1.4	0.01
			1798+43.00	1808+54.00		X			7.5				1,011.0		26.3	14.2	12.5	0.03
			1808+54.00	1809+29.00		X			0.3		75.0				0.6	0.5	0.5	0.01
			1809+29.00	1810+64.00		X			0.5					135.0	1.8	1.0	1.7	0.01
			1547+52.00	1628+94.00	X		A	8,142.0										
			1549+02.00	1628+94.00	X				40.7	7,992.0					215.8	77.3	148.0	0.14
			1650+25.95	1672+14.00	X		A	2,188.0	11.1	2,188.0					59.1	21.2	40.5	0.04
			1697+73.00	1713+58.00	X		A	1,585.0	8.1	1,585.0					42.8	15.3	29.4	0.03
			1713+58.00	1723+57.00	X		E	999.0	7.4				999.0		26.0	14.1	12.3	0.03
			1726+98.00	1749+31.00	X		E	2,233.0	16.5				2,233.0		58.1	31.4	27.6	0.06
			1749+51.00	1753+68.00	X		E	417.0	3.1				417.0		10.8	5.9	5.1	0.02
			1773+72.00	1785+80.00	X		E	1,208.0	8.9				1,208.0		31.4	17.0	14.9	0.03
			1786+00.00	1789+58.00	X		E	358.0										
			1786+00.00	1786+38.00	X				0.3				38.0		1.0	0.5	0.5	0.01
			1786+38.00	1787+01.00	X				0.2		63.0				0.5	0.4	0.4	0.01
			1787+01.00	1789+58.00	X				1.9				257.0		6.7	3.6	3.2	0.01
			1789+78.00	1790+56.00	X		E	78.0	0.6				78.0		2.0	1.1	1.0	0.01
			1790+76.00	1798+43.00	X		E	767.0	5.7				767.0		19.9	10.8	9.5	0.02
SHEET Q-4 SUBTOTAL								38,514.0	239.6	13,410.0	351.0	74.0	22,047.0	2,482.0	975.1	461.4	555.0	1.03

(*) = FOR ADDITIONAL QUANTITIES, SEE ROADWAY QUANTITIES TABLE
(*)(*) = FOR ADDITIONAL QUANTITIES, SEE DRAINAGE QUANTITIES

SUMMARY OF QUANTITIES
Q-4

REVISED BY	DATE REVISED
QUAN TON	OSCAR AGUILAR
CALCULATED-DESIGNED BY	CHECKED BY
FUNCTIONAL SUPERVISOR	ED HAJJ

STATE OF CALIFORNIA - DEPARTMENT OF TRANSPORTATION
Caltrans®
DESIGN

LAST REVISION 05-12-14 | DATE PLOTTED => 12-AUG-2014 TIME PLOTTED => 08:08

Dist	COUNTY	ROUTE	POST MILES TOTAL PROJECT	SHEET No.	TOTAL SHEETS
11	SD	8	R25.9/R32.2	24	67

REGISTERED CIVIL ENGINEER 04-29-14 DATE

08-11-14
PLANS APPROVAL DATE

REGISTERED PROFESSIONAL ENGINEER OSCAR AGUILAR No. C62571 Exp. 06-30-16 CIVIL STATE OF CALIFORNIA

THE STATE OF CALIFORNIA OR ITS OFFICERS OR AGENTS SHALL NOT BE RESPONSIBLE FOR THE ACCURACY OR COMPLETENESS OF SCANNED COPIES OF THIS PLAN SHEET.

DIKE QUANTITIES

Rte	LINE DESIGNATION	DIRECTION	STATION		SHOULDER		REMOVE AC DIKE		ROADWAY Exc	PLACE HMA DIKE					MINOR HMA	RHMA (GAP GRADED)	IMPORTED BORROW	ASPHALTIC EMULSION (FOG SEAL COAT)
			FROM	TO	INSIDE	OUTSIDE	TYPE	(LF)	(CY)	(TYPE A) (LF)	(TYPE C) (LF)	(TYPE D) (LF)	(TYPE E) (LF)	(TYPE F) (LF)	(TON)(*)(*)	(TON)(*)	(CY)	(TON)(*)
8	"SD-8"	WB	1548+11.00	1557+19.00	X		E	908.0	6.7				908.0		23.6	12.8	11.2	0.03
			1557+19.00	1571+62.00	X		A	1,443.0	7.3	1,443.0					39.0	14.0	26.7	0.03
			1571+62.00	1601+71.00	X		E	3,009.0	22.3				3,009.0		78.2	42.3	37.1	0.08
			1601+93.00	1620+26.00	X		A	1,833.0	9.3	1,833.0					49.5	17.7	33.9	0.04
			1626+24.00	1634+10.00	X		E	786.0	5.8				786.0		20.4	11.1	9.7	0.02
			1634+38.00	1679+50.00	X		E	4,512.0	33.4				4,512.0		117.3	63.5	55.7	0.12
			1687+06.00	1719+13.00	X		E	3,207.0	23.8				3,207.0		83.4	45.1	39.6	0.08
			1753+74.00	1769+60.00	X		E	1,586.0	11.7				1,586.0		41.2	22.3	19.6	0.04
			1802+12.00	1807+08.00	X		E	496.0	3.7				496.0		12.9	7.0	6.1	0.02
			1505+05.00	1523+70.00		X	A	1,865.0	9.5	1,865.0					50.4	18.0	34.5	0.04
			1523+85.00	1544+13.00		X	A	2,028.0										
			1523+85.00	1539+81.00		X			19.2			1,596.0			93.5	36.5	29.6	0.07
			1539+81.00	1544+13.00		X			2.2	432.0					11.7	4.2	8.0	0.01
			1548+06.00	1548+16.00		X	F	10.0	0.0					10.0	0.1	0.1	0.1	0.01
			1548+26.00	1550+38.00		X	F	212.0										0.00
			1550+38.00	1557+19.00		X	A	681.0										
			1557+19.00	1617+60.00		X	E	6,041.0										
			1548+26.00	1550+06.00		X			0.7					180.0	2.4	1.3	2.2	0.01
			1550+06.00	1551+43.00		X			0.7	137.0					3.7	1.3	2.5	0.01
			1551+43.00	1552+18.00		X			0.3		75.0				0.6	0.5	0.5	0.01
			1552+18.00	1617+60.00		X			48.5				6,542.0		170.1	92.1	80.8	0.17
			1623+22.00	1641+86.00		X	E	1,864.0										
			1623+22.00	1635+18.00		X			8.9				1,196.0		31.1	16.8	14.8	0.03
			1635+18.00	1635+68.00		X			0.2					50.0	0.7	0.4	0.6	0.01
			1635+68.00	1636+31.00		X			0.2		63.0				0.5	0.4	0.4	0.01
			1636+31.00	1641+86.00		X			4.1				555.0		14.4	7.8	6.9	0.02
			1648+62.00	1649+62.00		X	A	100.0	0.4					100.0	1.3	0.7	1.2	0.01
			1649+62.00	1650+25.00		X	A	63.0	0.2		63.0				0.5	0.4	0.4	0.01
			1650+25.00	1650+63.00		X	A	38.0	0.5			38.0			2.2	0.9	0.7	0.01
			1651+23.00	1657+55.00		X	E	632.0	4.7				632.0		16.4	8.9	7.8	0.02
			1658+15.00	1671+40.00		X	E	1,325.0	9.8				1,325.0		34.5	18.6	16.4	0.04
			1671+60.00	1679+50.00		X	E	790.0	5.9				790.0		20.5	11.1	9.8	0.02
			1679+50.00	1689+64.00		X	F	1,014.0	3.8					1,014.0	13.4	7.1	12.5	0.02
			1699+53.00	1725+67.00		X	A	2,614.0	31.5			2,614.0			153.2	59.8	48.4	0.11
			1727+00.00	1729+50.00		X	F	95.0	0.9					250.0	3.3	1.8	3.1	0.01
			1729+50.00	1730+15.00		X			0.2					65.0	0.9	0.5	0.8	0.01
			1747+20.00	1747+58.00		X	A	38.0	0.5			38.0			2.2	0.9	0.7	0.01
			1747+68.00	1755+62.00		X	A	794.0	4.1			794.0			46.5	18.2	14.7	0.04
			1766+78.00	1775+68.00		X	A	890.0	10.7			890.0			52.2	20.4	16.5	0.04
			1778+21.00	1797+25.00		X	A	1,904.0										
			1778+21.00	1788+41.00		X			5.2	1,020.0					27.5	9.9	18.9	0.02
			1788+41.00	1789+16.00		X			0.3		75.0				0.6	0.5	0.5	0.01
			1789+16.00	1797+25.00		X			4.1	809.0					21.8	7.8	15.0	0.02
			1799+69.00	1805+28.00		X	A	559.0	2.8	559.0					15.1	5.4	10.4	0.01
			1808+32.00	1811+19.00		X	A	287.0	3.5			287.0			16.8	6.6	5.3	0.02
			1813+51.00	1813+71.00		X	A	20.0	0.1	20.0					0.5	0.2	0.4	0.01
			1814+01.00	1820+60.00		X	A	659.0	3.4	659.0					17.8	6.4	12.2	0.02
SHEET Q-5 SUBTOTAL								42,303.0	311.1	8,777.0	276.0	6,257.0	25,544.0	1,669.0	1,291.9	601.3	616.2	1.32

(*) = FOR ADDITIONAL QUANTITIES, SEE ROADWAY QUANTITIES TABLE
(*)(*) = FOR ADDITIONAL QUANTITIES, SEE DRAINAGE QUANTITIES

SUMMARY OF QUANTITIES
Q-5

REVISED BY | DATE REVISED
QUAN TON | OSCAR AGUILAR
CALCULATED-DESIGNED BY | CHECKED BY
FUNCTIONAL SUPERVISOR | ED HAJJ
STATE OF CALIFORNIA - DEPARTMENT OF TRANSPORTATION
Caltrans®
DESIGN

LAST REVISION 05-12-14 | DATE PLOTTED => 12-AUG-2014 | TIME PLOTTED => 08:08

Dist	COUNTY	ROUTE	POST MILES TOTAL PROJECT	SHEET No.	TOTAL SHEETS
11	SD	8	R25.9/R32.2	25	67

REGISTERED CIVIL ENGINEER 04-29-14 DATE

08-11-14
PLANS APPROVAL DATE

REGISTERED PROFESSIONAL ENGINEER OSCAR AGUILAR No. C62571 Exp. 06-30-16 CIVIL STATE OF CALIFORNIA

THE STATE OF CALIFORNIA OR ITS OFFICERS OR AGENTS SHALL NOT BE RESPONSIBLE FOR THE ACCURACY OR COMPLETENESS OF SCANNED COPIES OF THIS PLAN SHEET.

DIKE QUANTITIES

Rte	LINE DESIGNATION	DIRECTION	STATION FROM	STATION TO	SHOULDER INSIDE	SHOULDER OUTSIDE	REMOVE AC DIKE TYPE	REMOVE AC DIKE (LF)	ROADWAY Exc (CY)	PLACE HMA DIKE (TYPE A) (LF)	PLACE HMA DIKE (TYPE C) (LF)	PLACE HMA DIKE (TYPE D) (LF)	PLACE HMA DIKE (TYPE E) (LF)	PLACE HMA DIKE (TYPE F) (LF)	MINOR HMA (TON)(*)(*)	RHMA (GAP GRADED) (TON)(*)	IMPORTED BORROW (CY)	ASPHALTIC EMULSION (FOG SEAL COAT) (TON)(*)
			TAVERN Rd															
8	"TV-1"	WB	1633+45.00	1645+90.00	X		E	1,245.0	15.0			1,245.0			73.0	28.5	23.1	0.05
		WB	1633+45.00	1636+20.00		X	D	275.0	3.3			275.0			16.1	6.3	5.1	0.02
		WB	1636+35.00	1645+35.00		X	D	900.0										
		WB	1645+35.00	1647+82.00		X	F	247.0										
		WB	1647+82.00	1648+62.00		X	C	80.0										
		WB	1636+35.00	1645+12.00		X			6.5				877.0		22.8	12.3	10.8	0.03
		WB	1645+12.00	1648+62.00		X			1.3					350.0	4.6	2.5	4.3	0.01
	"TV-2"	EB	1637+74.00	1637+85.00	X		E	11.0	0.1			11.0			0.6	0.3	0.2	0.01
		EB	1637+74.00	1638+53.00		X	A	79.0	1.0			79.0			4.6	1.8	1.5	0.01
		EB	1638+73.00	1645+61.00		X	A	688.0										
		EB	1645+61.00	1648+61.00		X	E	300.0										
		EB	1638+73.00	1643+93.00		X			3.9				520.0		13.5	7.3	6.4	0.02
		EB	1643+93.00	1645+14.00		X			1.5			121.0			7.1	2.8	2.2	0.01
		EB	1645+14.00	1648+61.00		X			2.6				347.0		9.0	4.9	4.3	0.01
	"TV-3"	EB	1625+25.00	1635+95.00		X	A	1,070.0										
		EB	1635+95.00	1636+95.00		X	E	100.0										
		EB	1636+95.00	1637+15.00		X	A	20.0										
		EB	1625+25.00	1634+25.00		X			4.6	900.0					24.3	8.7	16.7	0.02
		EB	1632+20.00	1637+65.00	X		E	475.0										
		EB	1636+95.00	1637+65.00	X		A	70.0										
		EB	1632+20.00	1637+00.00	X				3.6				480.0		12.5	6.8	5.9	0.02
		EB	1634+25.00	1636+50.00		X			1.7				225.0		5.9	3.2	2.8	0.01
		EB	1636+50.00	1637+15.00		X			0.8			65.0			3.8	1.5	1.2	0.01
		EB	1637+00.00	1637+65.00	X				0.2		65.0				0.5	0.5	0.4	0.01
	"TV-4"	WB	1617+60.00	1622+66.00		X	E	506.0										
		WB	1622+66.00	1634+05.00		X	D	1,139.0										
		WB	1617+60.00	1622+72.00		X			3.8				512.0		13.3	7.2	6.3	0.02
		WB	1622+72.00	1634+05.00		X			13.6			1,133.0			66.4	25.9	21.0	0.05
		WB	1633+13.00	1634+05.00	X		D	92.0	1.1			92.0			5.4	2.1	1.7	0.01
			WEST WILLOWS Rd															
	"WL-1"	WB	1787+69.00	1788+84.00		X	D	115.0	1.4			115.0			6.7	2.6	2.1	0.01
		WB	1788+84.00	1799+69.00		X	A	1,085.0	5.5	1,085.0					29.3	11.9	20.1	0.02
		WB	1788+00.00	1791+26.00	X		E	326.0	2.4				326.0		8.5	4.6	4.0	0.01
	"WL-2"	EB	1787+07.00	1789+87.00		X	D	280.0										
		EB	1789+87.00	1797+69.00		X	A	782.0										
		EB	1787+07.00	1791+80.00		X			5.7			473.0			27.7	10.8	8.8	0.02
		EB	1787+30.00	1788+08.00	X		E	78.0	0.6				78.0		2.0	1.1	1.0	0.01
		EB	1791+80.00	1797+69.00		X			3.0	589.0					15.9	5.7	10.9	0.01
	"WL-3"	EB	1776+68.00	1788+23.00		X	E	1,155.0	8.6				1,155.0		30.0	16.3	14.3	0.03
		EB	1786+50.00	1786+80.00	X		E	30.0										
		EB	1787+50.00	1787+90.00	X		E	40.0	0.3				40.0		1.0	0.6	0.5	0.01
	"WL-4"	WB	1775+68.00	1787+64.00		X	E	1,196.0										
		WB	1775+68.00	1778+40.00		X			3.3			272.0			15.9	6.2	5.0	0.02
		WB	1778+40.00	1787+64.00		X			6.8				924.0		24.0	13.0	11.4	0.03
		WB	1786+59.00	1787+39.00	X		D	80.0	1.0			80.0			4.7	1.8	1.5	0.01
				SHEET Q-6 SUBTOTAL				12,464.0	103.2	2,574.0	65.0	3,961.0	5,484.0	350.0	449.1	197.2	193.5	0.50
				SHEET Q-4 SUBTOTAL				38,514.0	239.6	13,410.0	351.0	74.0	22,047.0	2,482.0	975.1	461.4	555.0	1.03
				SHEET Q-5 SUBTOTAL				42,303.0	311.1	8,777.0	276.0	6,257.0	25,544.0	1,669.0	1,291.9	601.3	616.2	1.32
				TOTAL				93,281.0	653.9	24,761.0	692.0	10,292.0	53,075.0	4,501.0	2,716.1	1,259.9	1,364.7	2.85

(*) = FOR ADDITIONAL QUANTITIES, SEE ROADWAY QUANTITIES TABLE
(*)(*) = FOR ADDITIONAL QUANTITIES, SEE DRAINAGE QUANTITIES

SUMMARY OF QUANTITIES
Q-6

REVISED BY | DATE REVISED
QUAN TON | OSCAR AGUILAR
CALCULATED-DESIGNED BY | CHECKED BY
FUNCTIONAL SUPERVISOR | ED HAJJ
STATE OF CALIFORNIA - DEPARTMENT OF TRANSPORTATION
Caltrans®
DESIGN

LAST REVISION 05-12-14 | DATE PLOTTED => 12-AUG-2014 | TIME PLOTTED => 08:08

Dist	COUNTY	ROUTE	POST MILES TOTAL PROJECT	SHEET No.	TOTAL SHEETS
11	SD	8	R25.9/R32.2	26	67

Mahendra R. Nirmal 05-02-14
REGISTERED ELECTRICAL ENGINEER DATE

08-11-14
PLANS APPROVAL DATE

REGISTERED PROFESSIONAL ENGINEER
MAHENDRA R. NIRMAL
No. E 10689
Exp. 06-30-15
ELECTRICAL
STATE OF CALIFORNIA

THE STATE OF CALIFORNIA OR ITS OFFICERS OR AGENTS SHALL NOT BE RESPONSIBLE FOR THE ACCURACY OR COMPLETENESS OF SCANNED COPIES OF THIS PLAN SHEET.

DETECTOR LOOP

ROUTE	PM	EXISTING FACILITIES	INTERSECTIONS	DIRECTIONS	LOCATION OF DETECTOR LOOP CENTERED IN LANE (N)			DETECTOR LOOP (EA)	
					THROUGH LANES RIGHT AND LEFT TURN	THROUGH LANES AND LEFT TURN	RIGHT TURN		
8	28.494	SIGNAL No. P28.494	TAVERN ROAD EB RAMP	EB		1(4-3-R†)	1(OLA-2-R†)	2	SEE DETAIL 'A'
	28.431	SIGNAL No. P28.431	TAVERN ROAD WB RAMP	WB	1(8-1-R†)			1	SEE DETAIL 'B'
							TOTAL	3	

(N) NOT A SEPARATE PAY ITEM. FOR INFORMATION ONLY

NOTES:

* - LOOP IDENTIFICATION:

1(8-1-R†)
- QUANTITY OF LOOPS
- TRAFFIC PHASE IDENTIFICATION:
- LOOP NUMBER
- TERMINATION PULL BOX LOCATION
- TERMINAL PULL BOX LOCATION

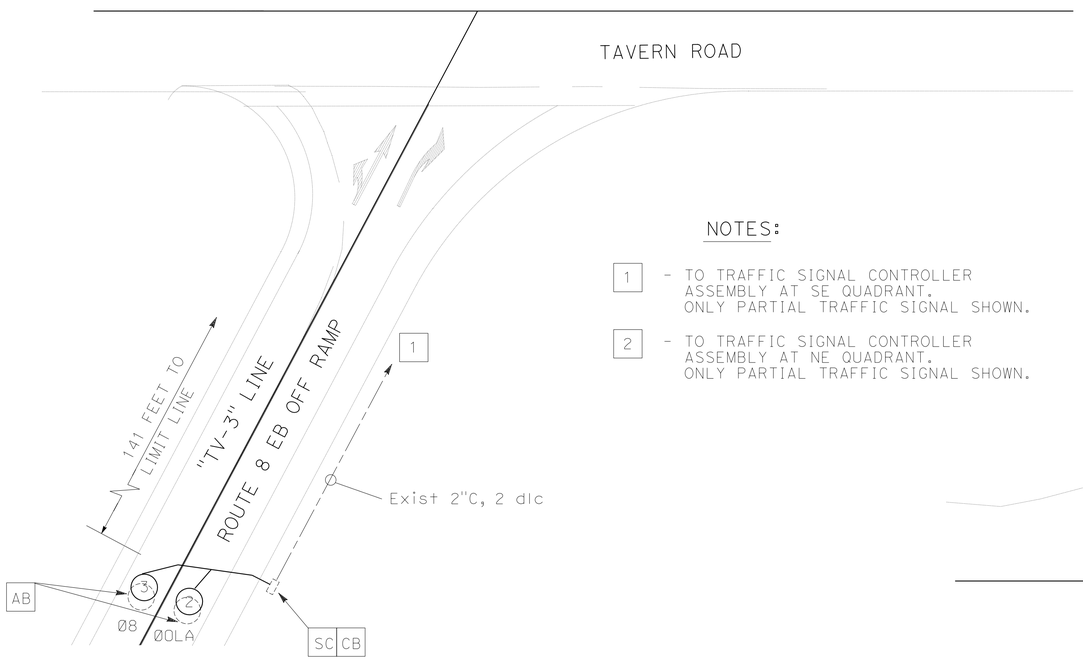

DETAIL 'A'

ROUTE 8 EB RAMPS AT
TAVERN ROAD
SIGNAL No. P28.494

NOTES:

1 - TO TRAFFIC SIGNAL CONTROLLER ASSEMBLY AT SE QUADRANT. ONLY PARTIAL TRAFFIC SIGNAL SHOWN.

2 - TO TRAFFIC SIGNAL CONTROLLER ASSEMBLY AT NE QUADRANT. ONLY PARTIAL TRAFFIC SIGNAL SHOWN.

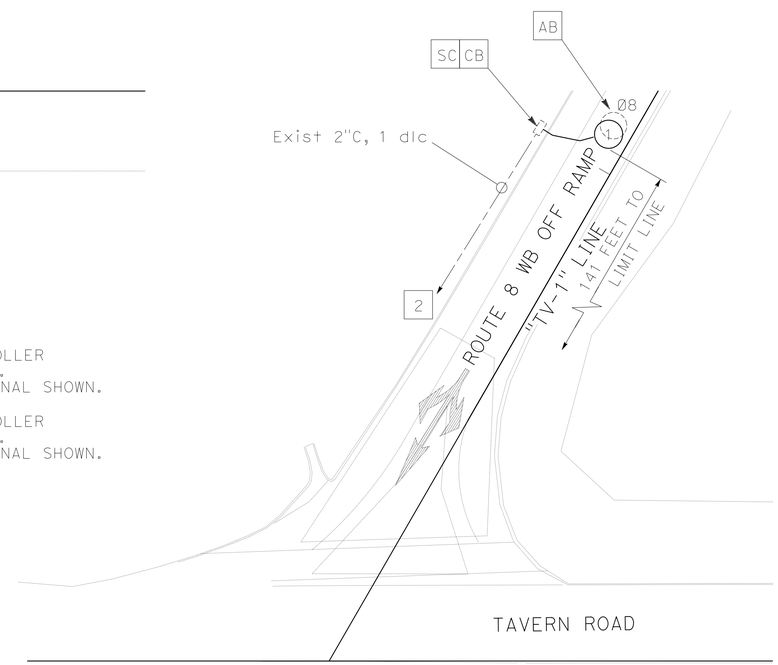

DETAIL 'B'

ROUTE 8 WB RAMPS AT
TAVERN ROAD
SIGNAL No. P28.431

APPROVED FOR ELECTRICAL WORK ONLY

DETECTOR LOOP

NO SCALE

E-1

STATE OF CALIFORNIA - DEPARTMENT OF TRANSPORTATION
Caltrans® **TRAFFIC ELECTRICAL**

FUNCTIONAL SUPERVISOR: RAJPREET SINGH
CALCULATED-DESIGNED BY: MAHENDRA R. NIRMAL
CHECKED BY: HECTOR SANTAMARIA
REVISED BY
DATE REVISED

LAST REVISION 05-12-14
DATE PLOTTED => 12-AUG-2014
TIME PLOTTED => 08:08

M

Maint	MAINTENANCE
Max	MAXIMUM
MB	METAL BEAM
MBB	METAL BEAM BARRIER
MBGR	METAL BEAM GUARD RAILING
Med	MEDIAN
MGS	MIDWEST GUARDRAIL SYSTEM
MH	MANHOLE
Min	MINIMUM
Misc	MISCELLANEOUS
Misc I & S	MISCELLANEOUS IRON AND STEEL
Mkr	MARKER
Mod	MODIFIED,
	MODIFY
Mon	MONUMENT
MP	METAL PLATE
MPGR	METAL PLATE GUARD RAILING
MR	MOVEMENT RATING
MSE	MECHANICALLY STABILIZED EMBANKMENT
Mt	MOUNTAIN, MOUNT
Mtl	MATERIAL
MVP	MAINTENANCE VEHICLE PULLOUT

N

N	NORTH
NB	NORTHBOUND
No.	NUMBER (MUST HAVE PERIOD)
Nos.	NUMBERS (MUST HAVE PERIOD)
NPS	NOMINAL PIPE SIZE
NS	NEAR SIDE
NSP	NEW STANDARD PLAN
NTS	NOT TO SCALE

O

Oblr	OBLITERATE
OC	OVERCROSSING
OD	OUTSIDE DIAMETER
OF	OUTSIDE FACE
OG	ORIGINAL GROUND
OGAC	OPEN GRADED ASPHALT CONCRETE
OGFC	OPEN GRADED FRICTION COURSE
OH	OVERHEAD
OHWM	ORDINARY HIGH WATER MARK
O-O	OUT TO OUT
Opp	OPPOSITE
OSD	OVERSIDE DRAIN

P

P	PAGE
PAP	PERFORATED ALUMINUM PIPE
PB	PULL BOX
PC	POINT OF CURVATURE,
	PRECAST
PCC	POINT OF COMPOUND CURVE,
	PORTLAND CEMENT CONCRETE
PCMS	PORTABLE CHANGEABLE MESSAGE SIGN
PCP	PERFORATED CONCRETE PIPE,
	PRESTRESSED CONCRETE PIPE
PCVC	POINT OF COMPOUND VERTICAL CURVE
PEC	PERMIT TO ENTER AND CONSTRUCT
Ped	PEDESTRIAN
Ped OC	PEDESTRIAN OVERCROSSING
Ped UC	PEDESTRIAN UNDERCROSSING
Perm Mtl	PERMEABLE MATERIAL

P continued

PG	PROFILE GRADE
PI	POINT OF INTERSECTION
PJP	PARTIAL JOINT PENETRATION
Pkwy	PARKWAY
ℙ,PL	PLATE
P/L	PROPERTY LINE
PM	POST MILE,
	TIME FROM NOON TO MIDNIGHT
PN	PAVING NOTCH
POC	POINT OF HORIZONTAL CURVE
POT	POINT OF TANGENT
POVC	POINT OF VERTICAL CURVE
PP	PIPE PILE,
	PLASTIC PIPE,
	POWER POLE
PPL	PREFORMED PERMEABLE LINER
PPP	PERFORATED PLASTIC PIPE
PRC	POINT OF REVERSE CURVE
PRF	PAVEMENT REINFORCING FABRIC
PRVC	POINT OF REVERSE VERTICAL CURVE
PS&E	PLANS, SPECIFICATIONS AND ESTIMATES
PS, P/S	PRESTRESSED
PSP	PERFORATED STEEL PIPE
PT	POINT OF TANGENCY
PVC	POLYVINYL CHLORIDE
Pvmt	PAVEMENT

Q

Qty	QUANTITY

R

R	RADIUS
R & D	REMOVE AND DISPOSE
R & S	REMOVE AND SALVAGE
R/C	RATE OF CHANGE
RCA	REINFORCED CONCRETE ARCH
RCB	REINFORCED CONCRETE BOX
RCP	REINFORCED CONCRETE PIPE
RCPA	REINFORCED CONCRETE PIPE ARCH
Rd	ROAD
Reinf	REINFORCED,
	REINFORCEMENT,
	REINFORCING
Rel	RELOCATE
Repl	REPLACEMENT
Ret	RETAINING
Rev	REVISED, REVISION
Rdwy	ROADWAY
RHMA	RUBBERIZED HOT MIX ASPHALT
Riv	RIVER
RM	ROAD-MIXED
RP	RADIUS POINT,
	REFERENCE POINT
RR	RAILROAD
RSP	ROCK SLOPE PROTECTION,
	REVISED STANDARD PLAN
Rt	RIGHT
Rte	ROUTE
RW	REDWOOD,
	RETAINING WALL
R/W	RIGHT OF WAY
Rwy	RAILWAY

S

S	SOUTH,
	SUPPLEMENT
SAE	STRUCTURE APPROACH EMBANKMENT
Salv	SALVAGE
SAPP	STRUCTURAL ALUMINUM PLATE PIPE
SB	SOUTHBOUND
SC	SAND CUSHION
SCSP	SLOTTED CORRUGATED STEEL PIPE
SD	STORM DRAIN
Sec	SECOND,
	SECTION
Sep	SEPARATION
SG	SUBGRADE
Shld	SHOULDER
Sht	SHEET
Sim	SIMILAR
℄	STATION LINE
SM	SELECTED MATERIAL
Spec	SPECIAL,
	SPECIFICATIONS
SPP	SLOTTED PLASTIC PIPE
SS	SLOPE STAKE
SSBM	STRAP AND SADDLE BRACKET METHOD
SSD	STRUCTURAL SECTION DRAIN
SSPA	STRUCTURAL STEEL PLATE ARCH
SSPP	STRUCTURAL STEEL PLATE PIPE
SSPPA	STRUCTURAL STEEL PLATE PIPE ARCH
SSRP	STEEL SPIRAL RIB PIPE
St	STREET
Sta	STATION
STBB	SINGLE THRIE BEAM BARRIER
Std	STANDARD
Str	STRUCTURE
Surf	SURFACING
SW	SIDEWALK,
	SOUND WALL
Swr	SEWER
Sym	SYMMETRICAL
S4S	SURFACE 4 SIDES

T

T	SEMI-TANGENT
Tan	TANGENT
TBB	THRIE BEAM BARRIER
Tbr	TIMBER
TC	TOP OF CURB
TCB	TRAFFIC CONTROL BOX
TCE	TEMPORARY CONSTRUCTION EASEMENT
Tel	TELEPHONE
Temp	TEMPORARY
TG	TOP OF GRADE
Tot	TOTAL
TP	TELEPHONE POLE
TPB	TREATED PERMEABLE BASE
TPM	TREATED PERMEABLE MATERIAL
Trans	TRANSITION

T continued

TS	TRANSVERSE,
	TRAFFIC SIGNAL,
	TUBULAR STEEL
Typ	TYPICAL

U

UC	UNDERCROSSING
UD	UNDERDRAIN
UG	UNDERGROUND
UON	UNLESS OTHERWISE NOTED
UP	UNDERPASS

V

V	VALVE,
	DESIGN SPEED
Var	VARIABLE,
	VARIES
VC	VERTICAL CURVE
VCP	VITRIFIED CLAY PIPE
Vert	VERTICAL
Via	VIADUCT
Vol	VOLUME

W

W	WEST,
	WIDTH
WB	WESTBOUND
WH	WEEP HOLE
WM	WIRE MESH
WS	WATER SURFACE
WSP	WELDED STEEL PIPE
Wt	WEIGHT
WV	WATER VALVE
WW	WINGWALL
WWLOL	WINGWALL LAYOUT LINE

X

X Sec	CROSS SECTION
Xing	CROSSING

Y

Yr	YEAR
Yrs	YEARS

Dist	COUNTY	ROUTE	POST MILES TOTAL PROJECT	SHEET No.	TOTAL SHEETS
11	SD	8	R25.9/R32.2	27	67

Grace M. Tsushima
REGISTERED CIVIL ENGINEER

July 19, 2013
PLANS APPROVAL DATE

REGISTERED PROFESSIONAL ENGINEER
Grace M. Tsushima
No. C49814
Exp. 9-30-14
CIVIL
STATE OF CALIFORNIA

THE STATE OF CALIFORNIA OR ITS OFFICERS OR AGENTS SHALL NOT BE RESPONSIBLE FOR THE ACCURACY OR COMPLETENESS OF SCANNED COPIES OF THIS PLAN SHEET.

TO ACCOMPANY PLANS DATED 08-11-14

UNIT OF MEASUREMENT SYMBOLS:

Some of the symbols used in the project plan quantity tables and in the Bid Item List are:

TABLE A

SYMBOL USED	DEFINITIONS
ACRE	ACRE
CF	CUBIC FOOT
CY	CUBIC YARD
EA	EACH
GAL	GALLON
LB	POUND
LF	LINEAR FOOT
SQFT	SQUARE FOOT
SQYD	SQUARE YARD
STA	100 FEET
TAB	TABLET
TON	2,000 POUNDS

Some of the symbols used in the plans other than in the project plan quantity tables are:

TABLE B

SYMBOL USED	DEFINITIONS
ksi	KIPS PER SQUARE INCH
ksf	KIPS PER SQUARE FOOT
psi	POUNDS PER SQUARE INCH
psf	POUNDS PER SQUARE FOOT
lb/ft^3, pcf	POUNDS PER CUBIC FOOT
tsf	TONS PER SQUARE FOOT
mph, MPH *	MILES PER HOUR
ø	NOMINAL DIAMETER
oz	OUNCE
lb	POUND
kip	1,000 POUNDS
cal	CALORIE
ft	FOOT OR FEET
gal	GALLON

* For use on a sign panel only

STATE OF CALIFORNIA
DEPARTMENT OF TRANSPORTATION

ABBREVIATIONS (SHEET 2 OF 2)

NO SCALE

RSP A10B DATED JULY 19, 2013 SUPERSEDES STANDARD PLAN A10B DATED MAY 20, 2011 - PAGE 2 OF THE STANDARD PLANS BOOK DATED 2010.

REVISED STANDARD PLAN RSP A10B

2010 REVISED STANDARD PLAN RSP A10B

6-7-13

Dist	COUNTY	ROUTE	POST MILES TOTAL PROJECT	SHEET No.	TOTAL SHEETS
11	SD	8	R25.9/R32.2	28	67

REGISTERED CIVIL ENGINEER

July 19, 2013
PLANS APPROVAL DATE

REGISTERED PROFESSIONAL ENGINEER Roberta L. McLaughlin No. C40375 Exp. 3-31-15 CIVIL STATE OF CALIFORNIA

THE STATE OF CALIFORNIA OR ITS OFFICERS OR AGENTS SHALL NOT BE RESPONSIBLE FOR THE ACCURACY OR COMPLETENESS OF SCANNED COPIES OF THIS PLAN SHEET.

TO ACCOMPANY PLANS DATED 08-11-14

EXIT RAMP NEUTRAL AREA (GORE) TREATMENT

DETAIL 36

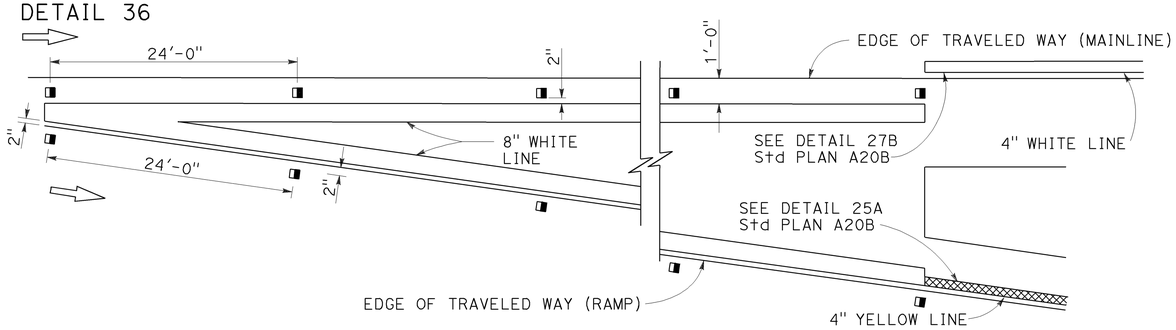

ENTRANCE RAMP NEUTRAL AREA (MERGE) TREATMENT

DETAIL 36A

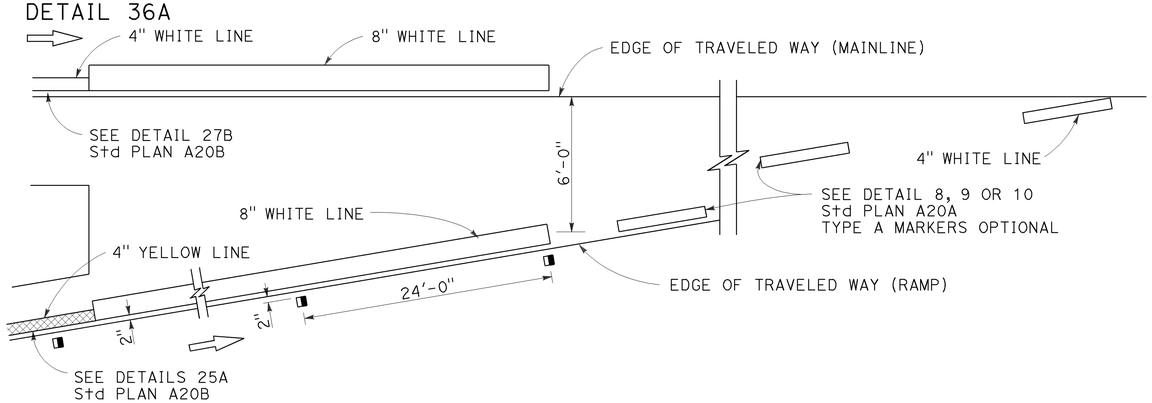

ENTRANCE RAMP NEUTRAL AREA (ACCELERATION LANE) TREATMENT

DETAIL 36B

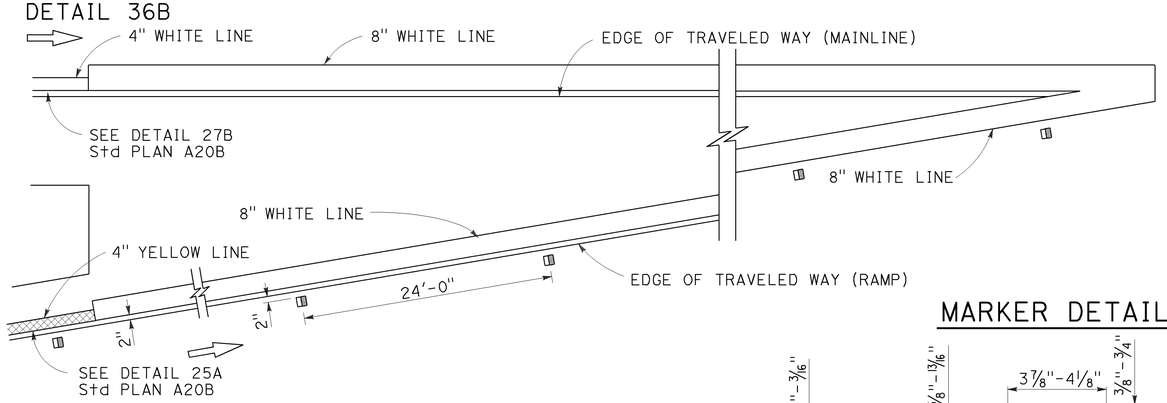

MARKER DETAILS

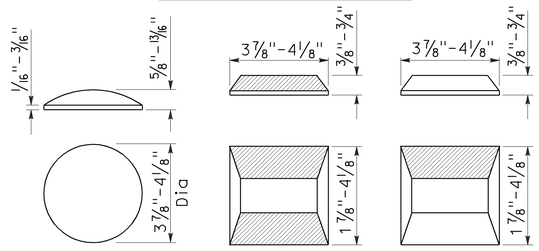

RETROREFLECTIVE FACE

LEGEND:

MARKERS

- ○ TYPE A WHITE NON-REFLECTIVE
- ⊟ TYPE C RED-CLEAR RETROREFLECTIVE
- ◨ TYPE G ONE-WAY CLEAR RETROREFLECTIVE

LANE DROP AT EXIT RAMPS

DETAIL 37

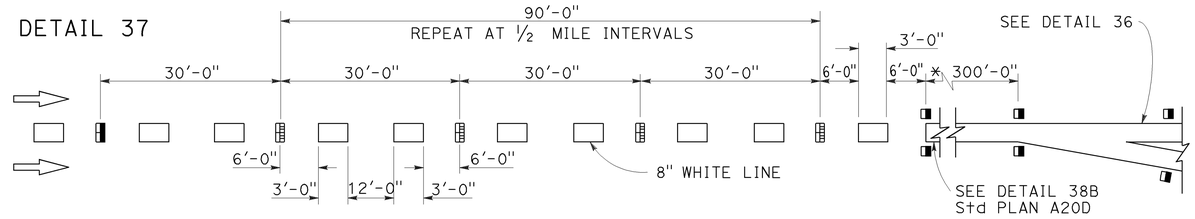

DETAIL 37A

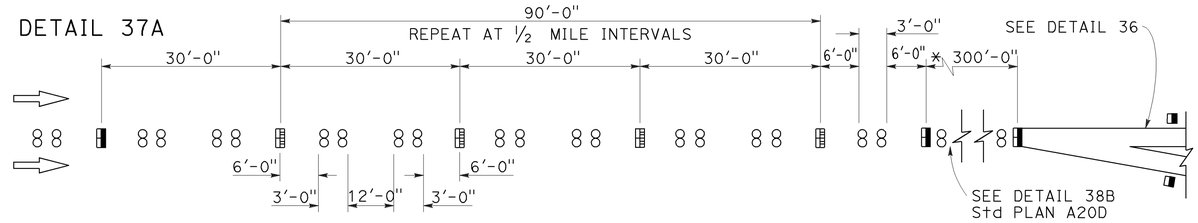

* The solid channelizing line shown may be omitted on short auxiliary lanes where weaving length is critical.

LANE DROP AT INTERSECTIONS

DETAIL 37B

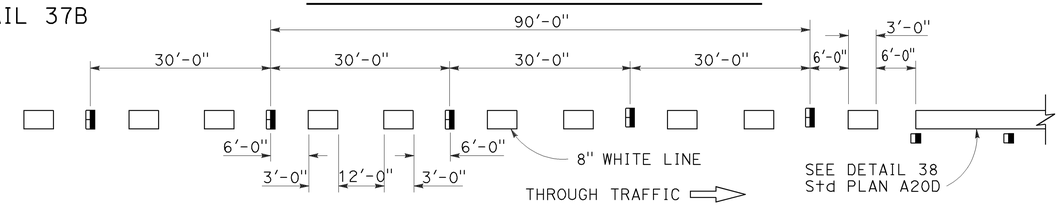

DETAIL 37C

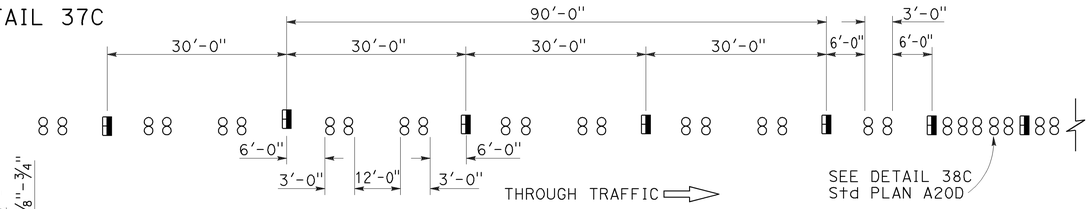

STATE OF CALIFORNIA
DEPARTMENT OF TRANSPORTATION

PAVEMENT MARKERS AND TRAFFIC LINE TYPICAL DETAILS

NO SCALE

RSP A20C DATED JULY 19, 2013 SUPERSEDES STANDARD PLAN A20C DATED MAY 20, 2011 - PAGE 11 OF THE STANDARD PLANS BOOK DATED 2010.

REVISED STANDARD PLAN RSP A20C

2010 REVISED STANDARD PLAN RSP A20C

4-29-13

Dist	COUNTY	ROUTE	POST MILES TOTAL PROJECT	SHEET No.	TOTAL SHEETS
11	SD	8	R25.9/R32.2	29	67

REGISTERED CIVIL ENGINEER

April 20, 2012
PLANS APPROVAL DATE

REGISTERED PROFESSIONAL ENGINEER
Roberta L. McLaughlin
No. C40375
Exp. 3-31-13
CIVIL
STATE OF CALIFORNIA

THE STATE OF CALIFORNIA OR ITS OFFICERS OR AGENTS SHALL NOT BE RESPONSIBLE FOR THE ACCURACY OR COMPLETENESS OF SCANNED COPIES OF THIS PLAN SHEET.

TO ACCOMPANY PLANS DATED 08-11-14

2010 REVISED STANDARD PLAN RSP A24A

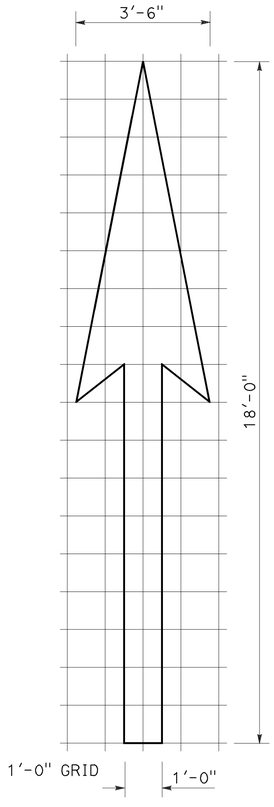

A=25 ft^2

TYPE I 18'-0" ARROW

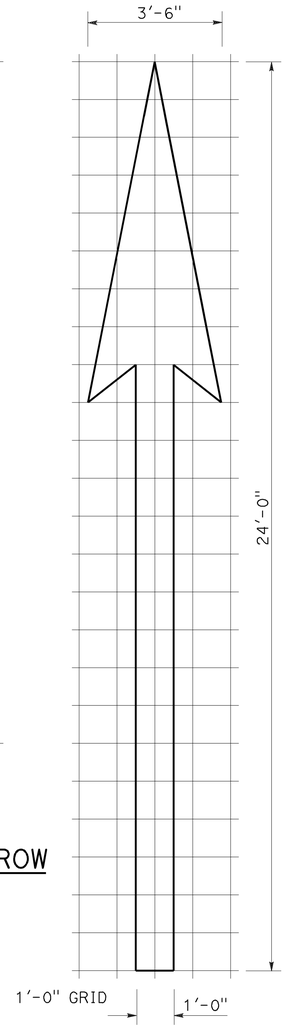

A=31 ft^2

TYPE I 24'-0" ARROW

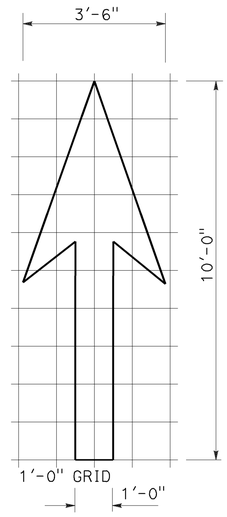

A=14 ft^2

TYPE I 10'-0" ARROW

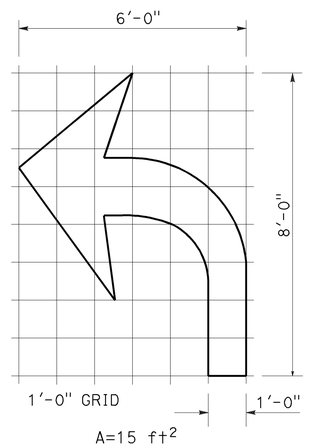

A=15 ft^2

TYPE IV (L) ARROW

(For Type IV (R) arrow, use mirror image)

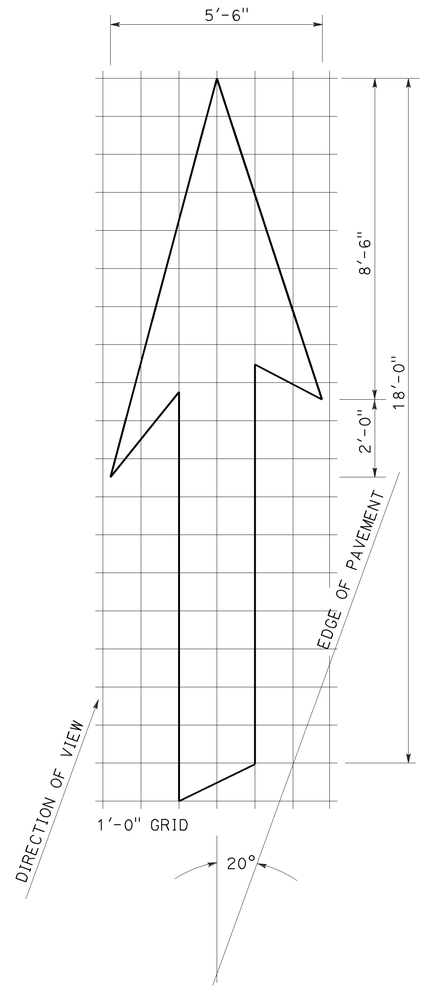

A=42 ft^2

TYPE VI ARROW

Right lane drop arrow
(For left lane, use mirror image)

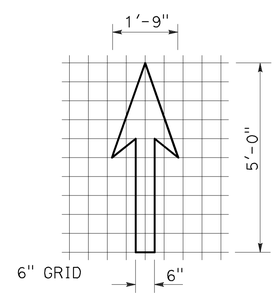

A=3.5 ft^2

BIKE LANE ARROW

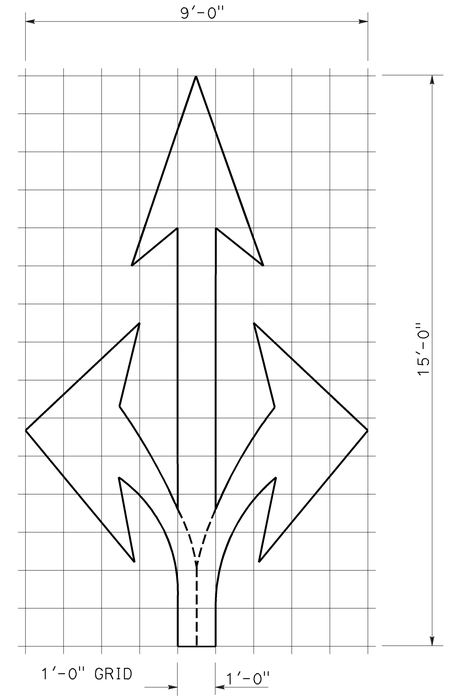

A=36 ft^2

TYPE VIII ARROW

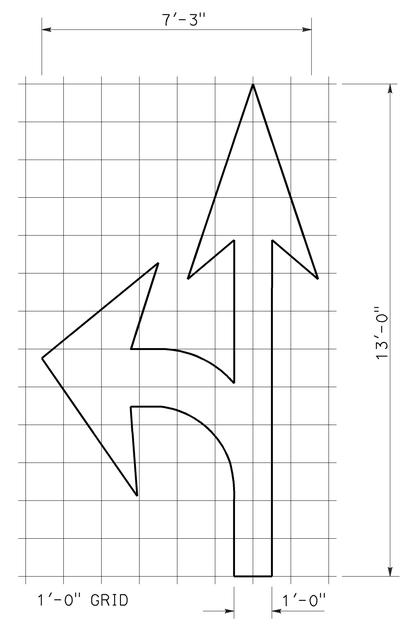

A=27 ft^2

TYPE VII (L) ARROW

(For Type VII (R) arrow, use mirror image)

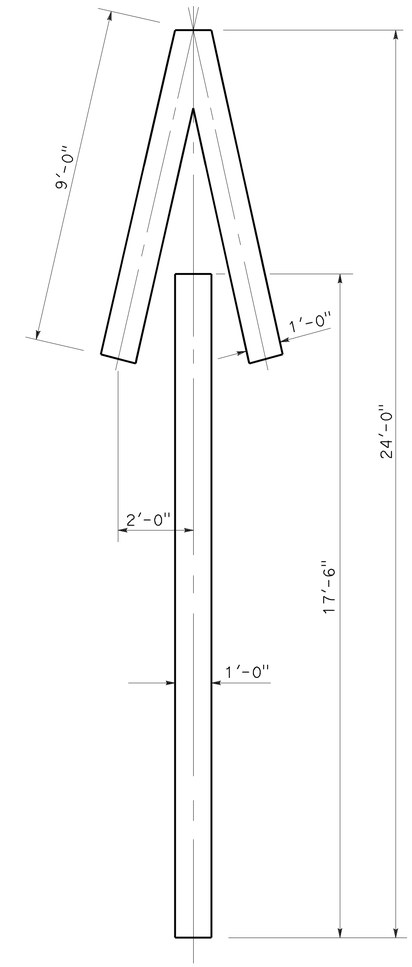

A=33 ft^2

TYPE V ARROW

NOTE:
Minor variations in dimensions may be accepted by the Engineer.

STATE OF CALIFORNIA
DEPARTMENT OF TRANSPORTATION

PAVEMENT MARKINGS ARROWS

NO SCALE

RSP A24A DATED APRIL 20, 2012 SUPERSEDES STANDARD PLAN A24A DATED MAY 20, 2011 - PAGE 13 OF THE STANDARD PLANS BOOK DATED 2010.

REVISED STANDARD PLAN RSP A24A

3-14-12

Dist	COUNTY	ROUTE	POST MILES TOTAL PROJECT	SHEET No.	TOTAL SHEETS
11	SD	8	R25.9/R32.2	30	67

REGISTERED CIVIL ENGINEER

July 20, 2012
PLANS APPROVAL DATE

REGISTERED PROFESSIONAL ENGINEER
Roberta L. McLaughlin
No. C40375
Exp. 3-31-13
CIVIL
STATE OF CALIFORNIA

THE STATE OF CALIFORNIA OR ITS OFFICERS OR AGENTS SHALL NOT BE RESPONSIBLE FOR THE ACCURACY OR COMPLETENESS OF SCANNED COPIES OF THIS PLAN SHEET.

TO ACCOMPANY PLANS DATED 08-11-14

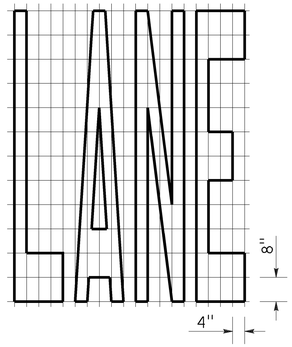

A=24 ft^2

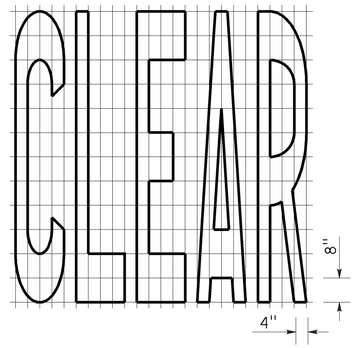

A=27 ft^2

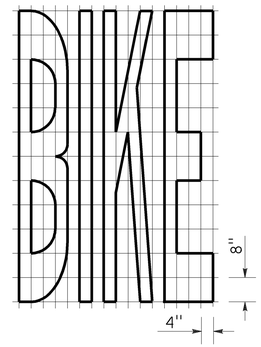

A=21 ft^2

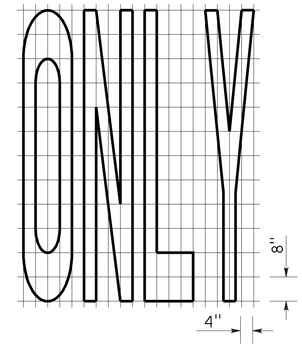

A=22 ft^2

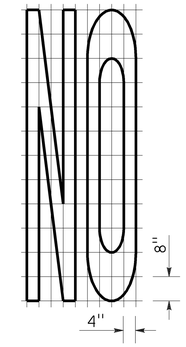

A=14 ft^2

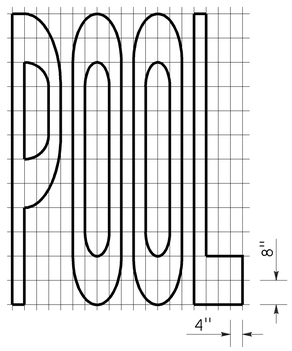

A=23 ft^2

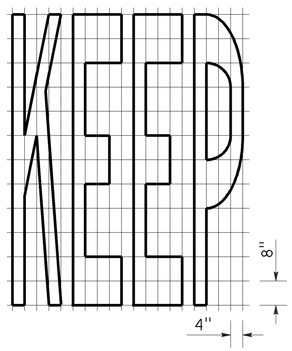

A=24 ft^2

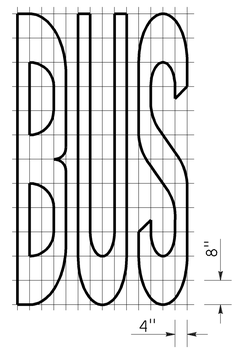

A=20 ft^2

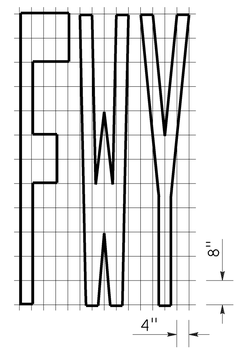

A=16 ft^2

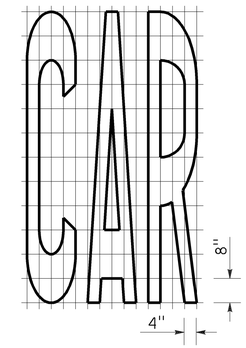

A=17 ft^2

WORD MARKINGS			
ITEM	ft^2	ITEM	ft^2
LANE	24	NO	14
POOL	23	BIKE	21
CAR	17	BUS	20
CLEAR	27	ONLY	22
KEEP	24	FWY	16

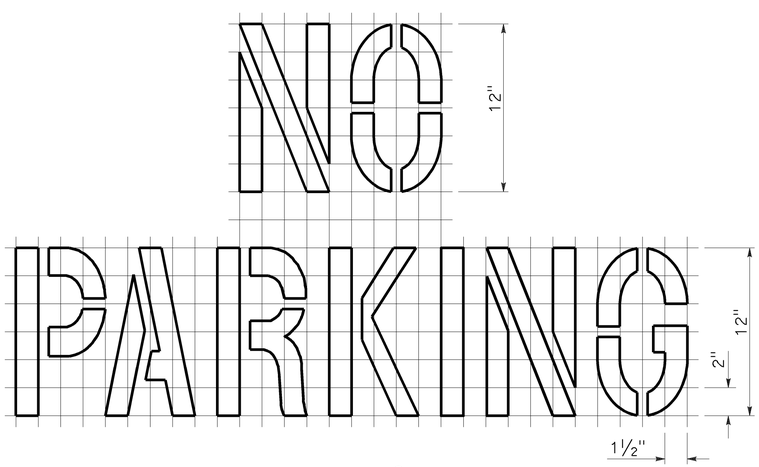

A=2 ft^2
See Notes 6 and 7

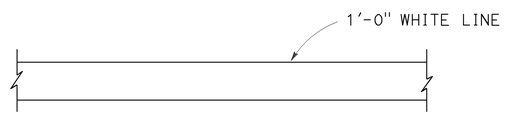

LIMIT LINE (STOP LINE)

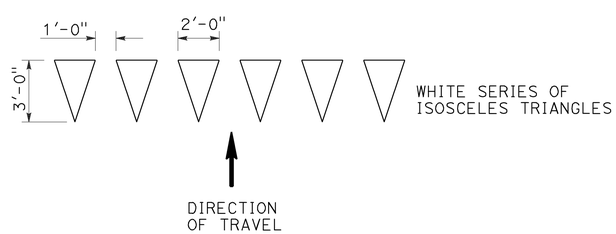

YIELD LINE

NOTES:

1. If a message consists of more than one word, it should read "UP", i.e., the first word should be nearest the driver.
2. The space between words should be at least four times the height of the characters for low speed roads, but not more than ten times the height of the characters. The space may be reduced appropriately where there is limited space because of local conditions.
3. Minor variations in dimensions may be accepted by the Engineer.
4. Portions of a letter, number or symbol may be separated by connecting segments not to exceed 2" in width.
5. The words "NO PARKING" pavement marking is to be used for parking facilities. For typical locations of markings, see Standard Plans A90A and A90B.
6. The words "NO PARKING", shall be painted in white letters no less than 1'-0" high on a contrasting background and located so that it is visible to traffic enforcement officials.

STATE OF CALIFORNIA
DEPARTMENT OF TRANSPORTATION

PAVEMENT MARKINGS WORDS, LIMIT AND YIELD LINES

NO SCALE

RSP A24E DATED JULY 20, 2012 SUPERSEDES STANDARD PLAN A24E
DATED MAY 20, 2011 - PAGE 17 OF THE STANDARD PLANS BOOK DATED 2010.

REVISED STANDARD PLAN RSP A24E

2010 REVISED STANDARD PLAN RSP A24E

6-12-12

Dist	COUNTY	ROUTE	POST MILES TOTAL PROJECT	SHEET No.	TOTAL SHEETS
11	SD	8	R25.9/R32.2	31	67

Randell D. Hiatt
REGISTERED CIVIL ENGINEER

July 19, 2013
PLANS APPROVAL DATE

REGISTERED PROFESSIONAL ENGINEER
Randell D. Hiatt
No. C50200
Exp. 6-30-15
CIVIL
STATE OF CALIFORNIA

THE STATE OF CALIFORNIA OR ITS OFFICERS OR AGENTS SHALL NOT BE RESPONSIBLE FOR THE ACCURACY OR COMPLETENESS OF SCANNED COPIES OF THIS PLAN SHEET.

TO ACCOMPANY PLANS DATED 08-11-14

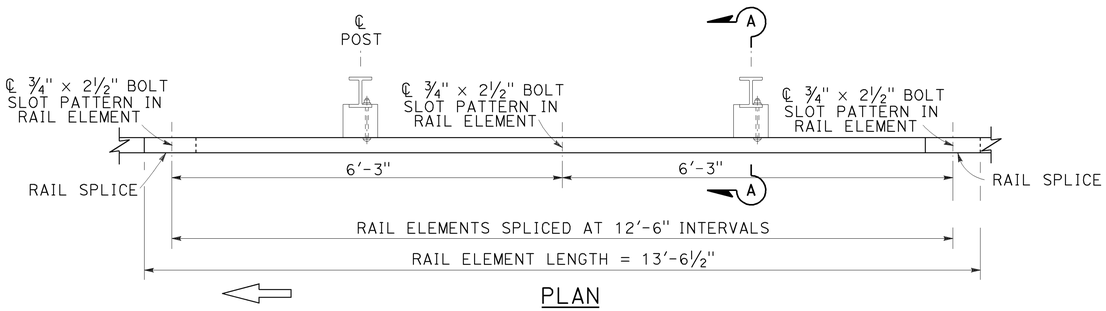

PLAN

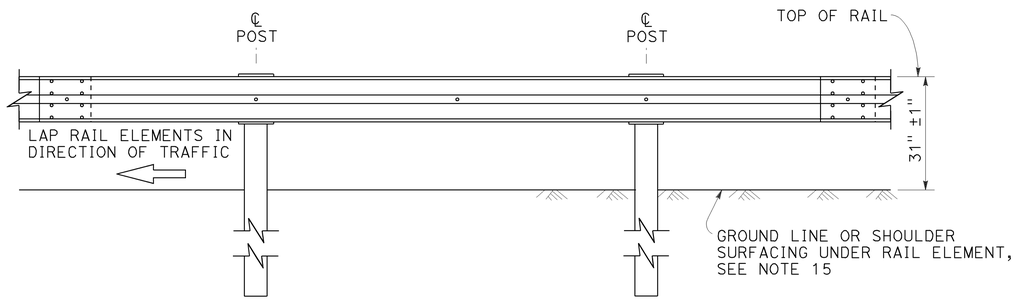

ELEVATION

MIDWEST GUARDRAIL SYSTEM WITH STEEL POSTS AND NOTCHED WOOD OR NOTCHED RECYCLED PLASTIC BLOCKS

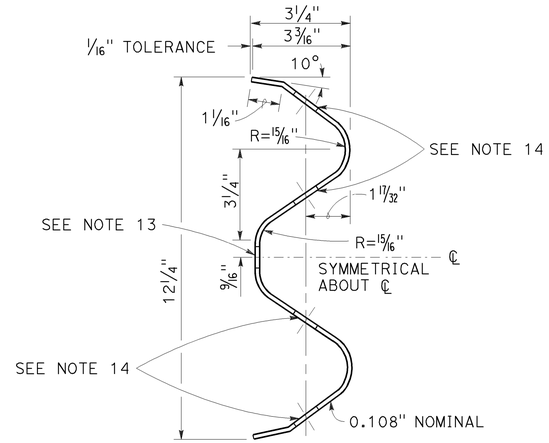

SECTION THRU RAIL ELEMENT

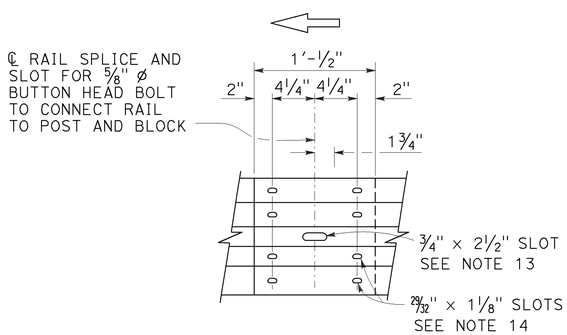

ELEVATION

RAIL ELEMENT SPLICE DETAIL

a) Connect the over lapped end of the rail elements with ⅝" ø × 1⅜" button head oval shoulder splice bolts inserted into the 29⁄32" × 1⅛" slots and bolted together with ⅝" ø recessed hex nuts. Recess of hex nut points toward rail element. A total of 8 bolts and nuts are to be used at each rail splice connection.

b) The ends of the rail elements are to be overlapped in the direction of traffic (see details).

c) Where end cap is to be attached to the end of a rail element, a total of 4 of the above described splice bolts and nuts are to be used.

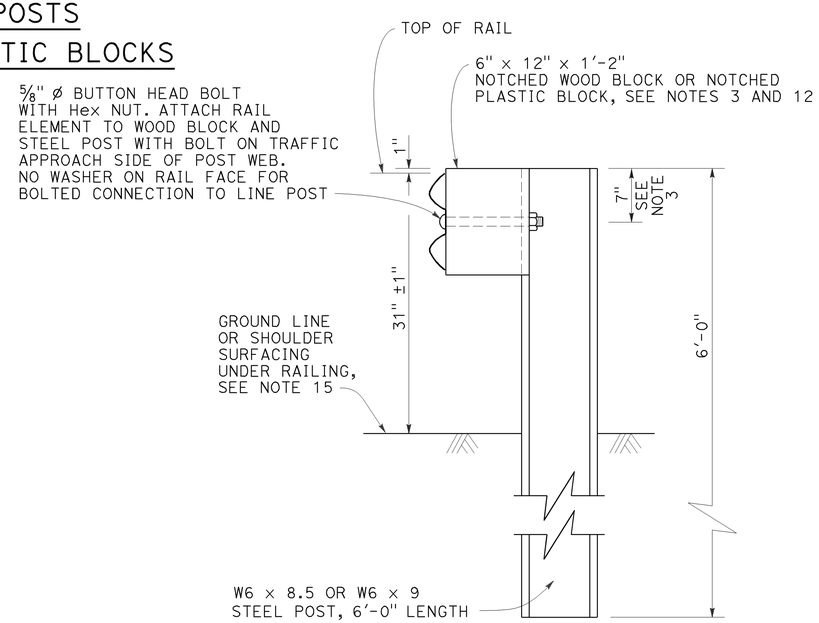

SECTION A-A

TYPICAL STEEL LINE POST INSTALLATION

See Note 4

NOTES:

1. For details of wood post installations, see Revised Standard Plan RSP A77L1.
2. For details of standard hardware used to construct MGS, see Revised Standard Plan RSP A77M1.
3. For details of steel posts and notched wood blocks used to construct MGS, see Revised Standard Plan RSP A77N2.
4. For additional installation details, see Revised Standard Plan RSP A77N3.
5. MGS post spacing to be 6'-3" center to center, except as otherwise noted.
6. For MGS typical layouts, see the A77P, A77Q and A77R Series of Standard Plans.
7. If railing is connected to terminal system end treatment, use 31" height terminal system end treatment.
8. For MGS end anchor details, see Revised Standard Plans RSP A77S1 and RSP A77T2.
9. For details of MGS transition to bridge railing, see Revised Standard Plan RSP A77U4.
10. For additional details of MGS connection to bridge railings, see Revised Standard Plans RSP A77U1, RSP A77U2 and RSP A77V1.
11. For dike positioning and MGS delineation details, see Revised Standard Plan RSP A77N4.
12. Notched face of block faces steel post.
13. Slotted hole for bolted connection of rail element to block and post. See "Section Thru Rail Element".
14. Slotted holes for splice bolts to overlap ends of rail element. See "Section Thru Rail Element".
15. Install posts in soil.

STATE OF CALIFORNIA
DEPARTMENT OF TRANSPORTATION

MIDWEST GUARDRAIL SYSTEM STANDARD RAILING SECTION (STEEL POST WITH NOTCHED WOOD OR NOTCHED RECYCLED PLASTIC BLOCK)

NO SCALE

RSP A77L2 DATED JULY 19, 2013 SUPPLEMENTS THE STANDARD PLANS BOOK DATED 2010.

REVISED STANDARD PLAN RSP A77L2

2010 REVISED STANDARD PLAN RSP A77L2

7-3-13

Dist	COUNTY	ROUTE	POST MILES TOTAL PROJECT	SHEET No.	TOTAL SHEETS
11	SD	8	R25.9/R32.2	32	67

Randell D. Hiatt
REGISTERED CIVIL ENGINEER

July 19, 2013
PLANS APPROVAL DATE

REGISTERED PROFESSIONAL ENGINEER
Randell D. Hiatt
No. C50200
Exp. 6-30-15
CIVIL
STATE OF CALIFORNIA

THE STATE OF CALIFORNIA OR ITS OFFICERS OR AGENTS SHALL NOT BE RESPONSIBLE FOR THE ACCURACY OR COMPLETENESS OF SCANNED COPIES OF THIS PLAN SHEET.

TO ACCOMPANY PLANS DATED 08-11-14

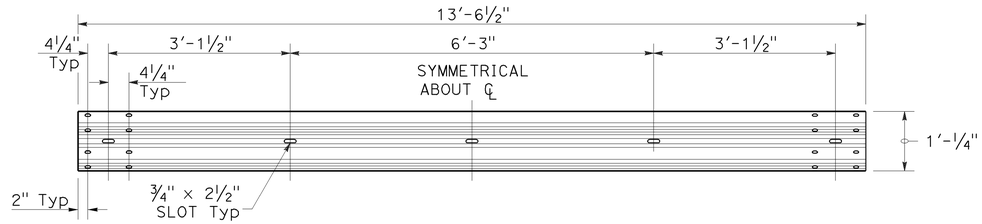

TYPICAL RAIL ELEMENT

NOTE:

1. Slotted holes for splice bolts to overlap ends of rail element.

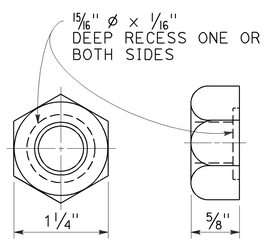

⅝" ø RECESS NUT

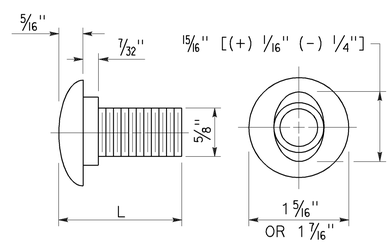

⅝" ø BUTTON HEAD BOLT

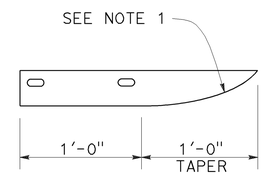

PLAN

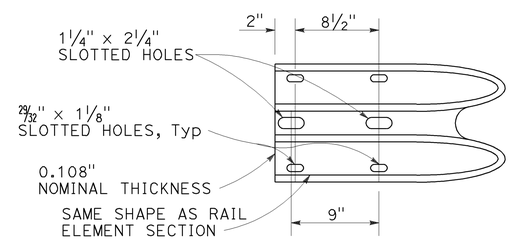

ELEVATION

END CAP
(TYPE A)

BUTTON HEAD BOLT

L	THREAD LENGTH
1⅜"	FULL THREAD LENGTH
2"	FULL THREAD LENGTH
10"	4" Min THREAD LENGTH
18"	4" Min THREAD LENGTH
20"	4" Min THREAD LENGTH
22"	4" Min THREAD LENGTH
26"	4" Min THREAD LENGTH
36"	4" Min THREAD LENGTH
** 2¾"	2" Min THREAD LENGTH
** 19"	4" Min THREAD LENGTH

** For nested rail applications.

STATE OF CALIFORNIA
DEPARTMENT OF TRANSPORTATION

MIDWEST GUARDRAIL SYSTEM STANDARD HARDWARE

NO SCALE

RSP A77M1 DATED JULY 19, 2013 SUPPLEMENTS THE STANDARD PLANS BOOK DATED 2010.

REVISED STANDARD PLAN RSP A77M1

2010 REVISED STANDARD PLAN RSP A77M1

Dist	COUNTY	ROUTE	POST MILES TOTAL PROJECT	SHEET No.	TOTAL SHEETS
11	SD	8	R25.9/R32.2	33	67

Randell D. Hiatt
REGISTERED CIVIL ENGINEER

November 15, 2013
PLANS APPROVAL DATE

REGISTERED PROFESSIONAL ENGINEER
Randell D. Hiatt
No. C50200
Exp. 6-30-15
CIVIL
STATE OF CALIFORNIA

THE STATE OF CALIFORNIA OR ITS OFFICERS OR AGENTS SHALL NOT BE RESPONSIBLE FOR THE ACCURACY OR COMPLETENESS OF SCANNED COPIES OF THIS PLAN SHEET.

TO ACCOMPANY PLANS DATED 08-11-14

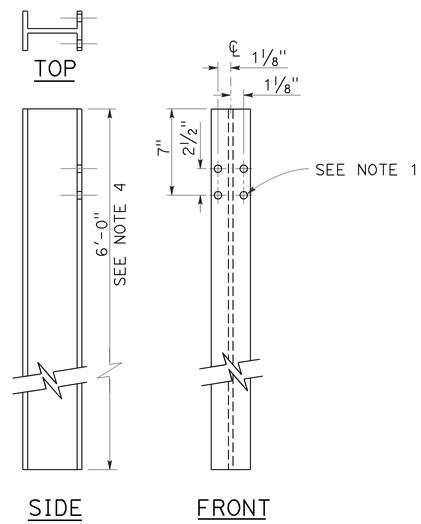

W6 x 9 OR W6 x 8.5
STEEL POST
See Note 4

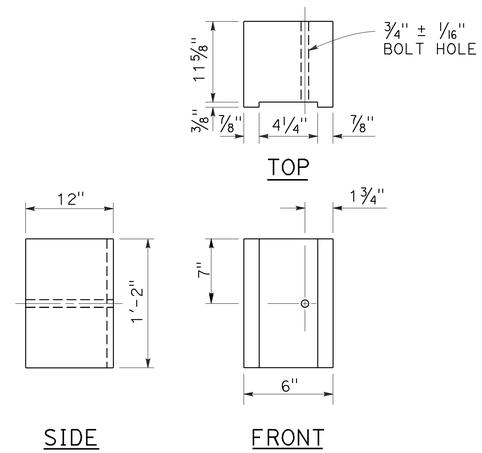

6" x 12"
NOTCHED WOOD BLOCK
See Notes 2 and 3

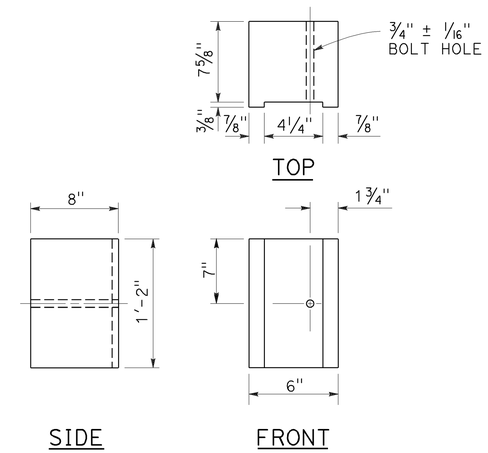

6" x 8"
NOTCHED WOOD BLOCK
Only for use with metal beam guard railing. See Note 5

NOTES:

1. All holes in steel post shall be 13/16" Dia maximum.
2. Dimensions shown for wood block are nominal.
3. Notched face of block faces steel post.
4. 6'-0" length posts to be used for typical roadway installation. See Revised Standard Plan RSP A77N3.
5. See Revised Standard Plan RSP A77L3 for use of 6" x 8" and 8" x 8" notched wood blocks.
6. This post and 8" x 12" block combination to be used for line post sections of MGS on narrow roadways and where strengthened line post sections of MGS are warranted to shield fixed objects.

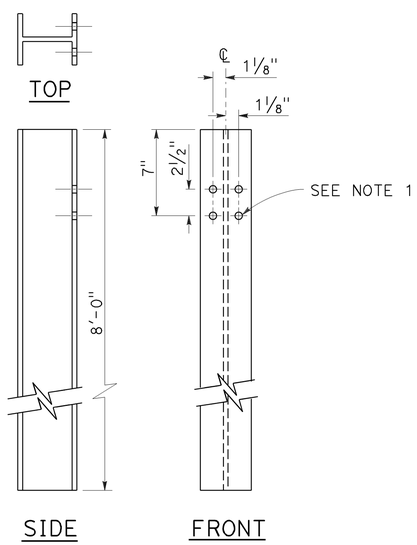

W6 x 15
STEEL POST
See Note 6

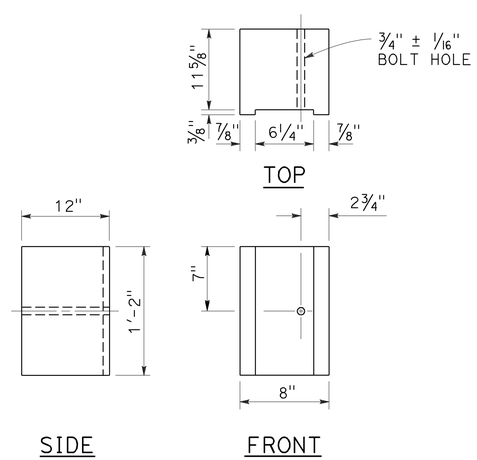

8" x 12"
NOTCHED WOOD BLOCK
See Notes 2 and 3

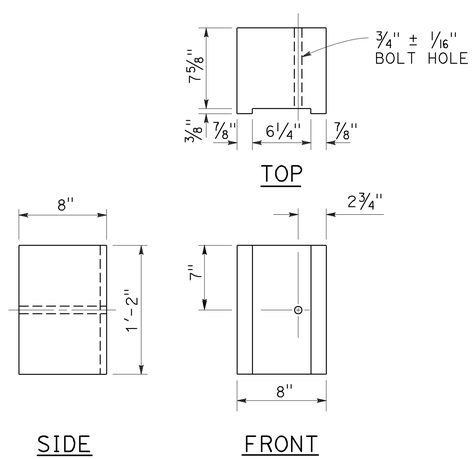

8" x 8"
NOTCHED WOOD BLOCK
Only for use with metal beam guard railing. See Note 5

STATE OF CALIFORNIA
DEPARTMENT OF TRANSPORTATION

MIDWEST GUARDRAIL SYSTEM STEEL POST AND NOTCHED WOOD BLOCK DETAILS

NO SCALE

RSP A77N2 DATED NOVEMBER 15, 2013 SUPERSEDES RSP A77N2
DATED JULY 19, 2013 THAT SUPPLEMENTS THE STANDARD PLANS BOOK DATED 2010.

REVISED STANDARD PLAN RSP A77N2

2010 REVISED STANDARD PLAN RSP A77N2

10-29-13

Dist	COUNTY	ROUTE	POST MILES TOTAL PROJECT	SHEET No.	TOTAL SHEETS
11	SD	8	R25.9/R32.2	34	67

Randell D. Hiatt
REGISTERED CIVIL ENGINEER

November 15, 2013
PLANS APPROVAL DATE

REGISTERED PROFESSIONAL ENGINEER
Randell D. Hiatt
No. C50200
Exp. 6-30-15
CIVIL
STATE OF CALIFORNIA

THE STATE OF CALIFORNIA OR ITS OFFICERS OR AGENTS SHALL NOT BE RESPONSIBLE FOR THE ACCURACY OR COMPLETENESS OF SCANNED COPIES OF THIS PLAN SHEET.

TO ACCOMPANY PLANS DATED 08-11-14

2010 REVISED STANDARD PLAN RSP A77N3

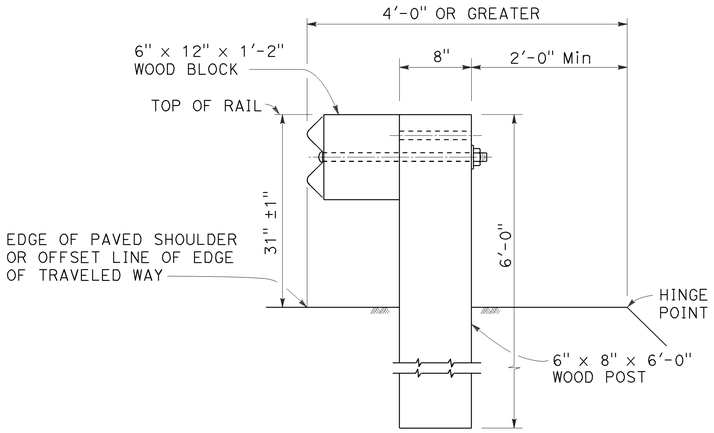

DETAIL A

TYPICAL ROADWAY INSTALLATION

See Note 1

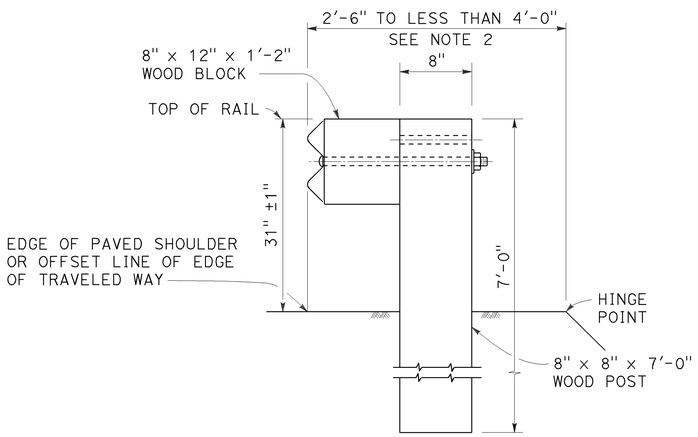

DETAIL B

NARROW ROADWAY INSTALLATION

See Note 1

POST EMBEDMENT

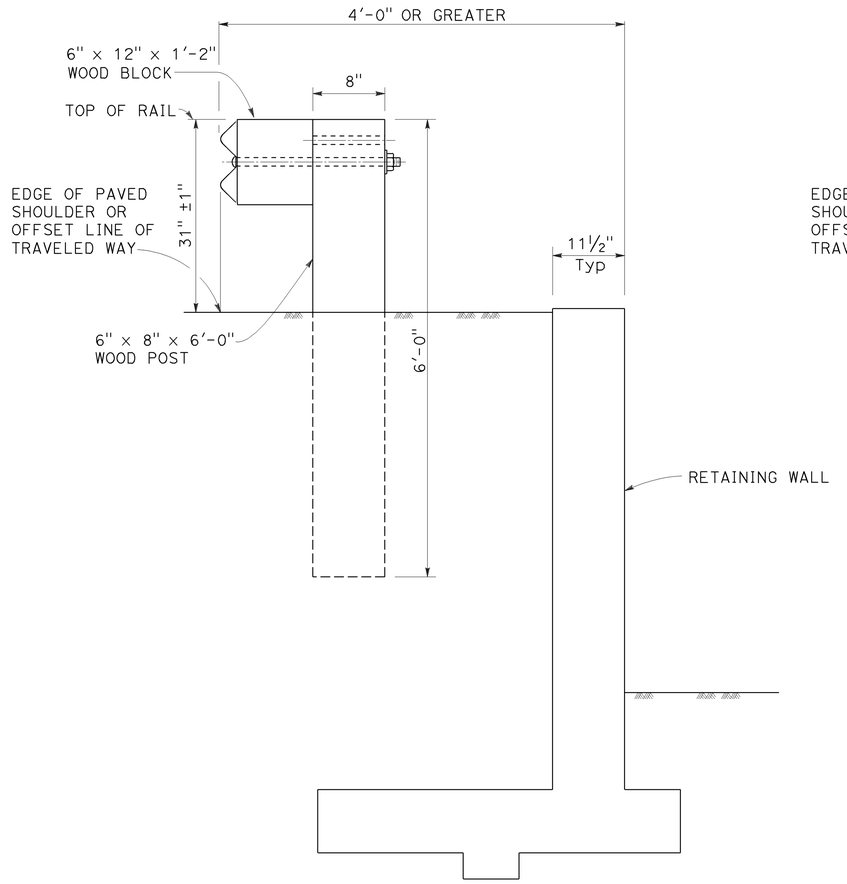

DETAIL C

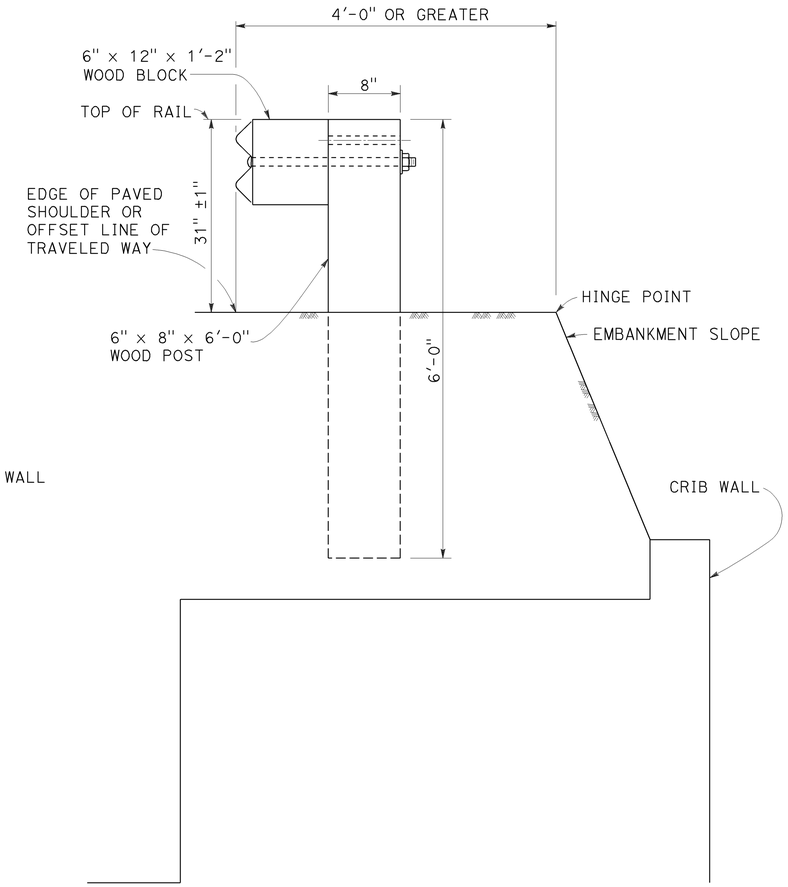

DETAIL D

INSTALLATION AT EARTH RETAINING WALLS

NOTES:

1. These installation details also applicable to steel line post installations. For Detail A, C, and D, where steel line post installations are constructed, W6 x 8.5 or W6 x 9 steel post, 6'-0" in length, with 6" x 12" x 1'-2" notched wood blocks or notched recycled plastic blocks are to be used in place of the size of wood post and wood block shown. For Detail B, where steel line post installations are constructed, W6 x 15 steel post, 8'-0" in length, with 8" x 12" x 1'-2" notched wood blocks or notched recycled plastic blocks are to be used in place of the size of wood post and wood block shown. For additional installation details, see Revised Standard Plan RSP A77L1 and RSP A77L2.
2. Where the distance between the face of the rail and the hinge point is less than 2'-6", see the Project Plans for special details.
3. For dike positioning with MGS installations, see Revised Standard Plan RSP A77N4.

STATE OF CALIFORNIA
DEPARTMENT OF TRANSPORTATION

MIDWEST GUARDRAIL SYSTEM TYPICAL LINE POST EMBEDMENT AND HINGE POINT OFFSET DETAILS

NO SCALE

RSP A77N3 DATED NOVEMBER 15, 2013 SUPERSEDES RSP A77N3
DATED JULY 19, 2013 THAT SUPPLEMENTS THE STANDARD PLANS BOOK DATED 2010.

REVISED STANDARD PLAN RSP A77N3

Dist	COUNTY	ROUTE	POST MILES TOTAL PROJECT	SHEET No.	TOTAL SHEETS
11	SD	8	R25.9/R32.2	35	67

Randell D. Hiatt
REGISTERED CIVIL ENGINEER

July 19, 2013
PLANS APPROVAL DATE

REGISTERED PROFESSIONAL ENGINEER
Randell D. Hiatt
No. C50200
Exp. 6-30-15
CIVIL
STATE OF CALIFORNIA

THE STATE OF CALIFORNIA OR ITS OFFICERS OR AGENTS SHALL NOT BE RESPONSIBLE FOR THE ACCURACY OR COMPLETENESS OF SCANNED COPIES OF THIS PLAN SHEET.

TO ACCOMPANY PLANS DATED 08-11-14

NOTES:

1. When necessary to place dike more than 7" in front of face of MGS, only Type C dike may be used. For dike details, see Revised Standard Plan RSP A87B.
2. For standard railing post embedment, see Revised Standard Plan RSP A77N3.
3. MGS delineation to be used where shown on the Project Plans.
4. When dike or curb is placed under MGS, the maximum height of the dike or curb shall be 6". Mountable dike should not be used. For dike and curb details, see Revised Standard Plans RSP A87A and RSP A87B.
5. For details of typical distance between the face of rail and hinge point, see Revised Standard Plan RSP A77N3.
6. For steel line posts, use 1/4 - 20 self-tapping screws in 0.22" diameter holes or 1/4" bolts in 9/32" diameter holes.

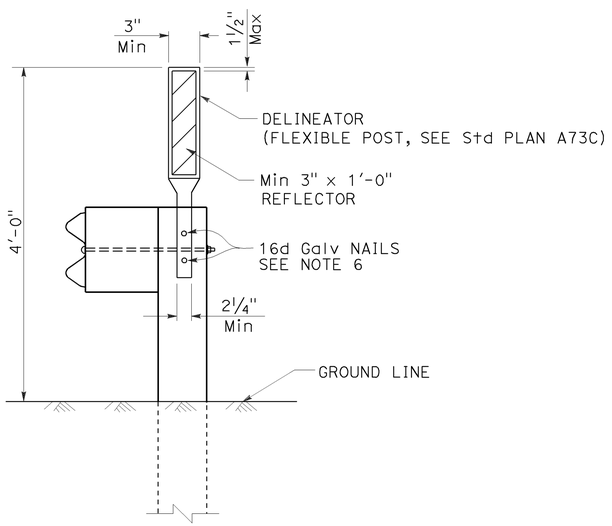

MGS DELINEATION
See Note 3

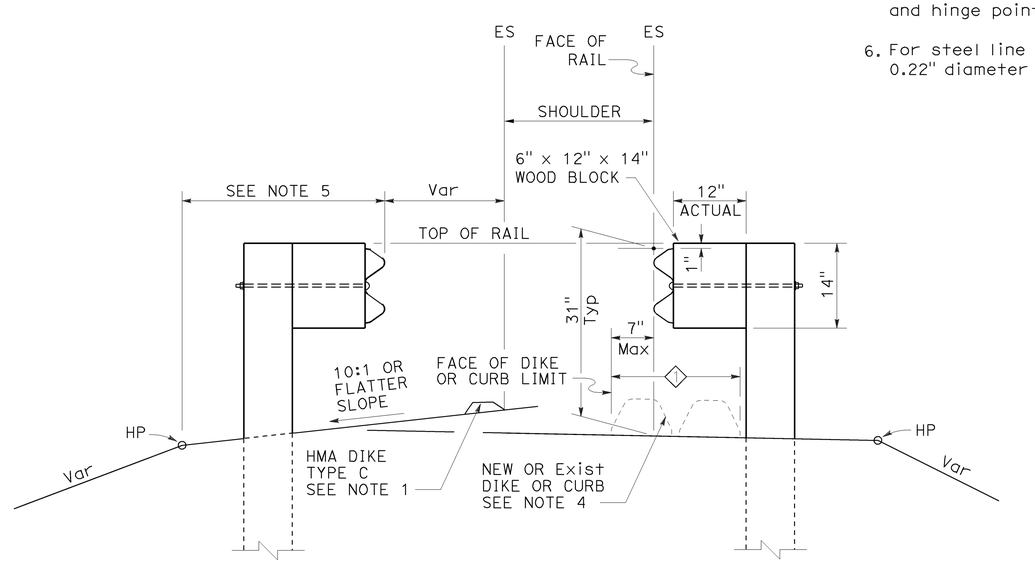

DIKE POSITIONING
See Note 1

1 PERMISSIBLE DIKE OR CURB PLACEMENT AREA

STATE OF CALIFORNIA
DEPARTMENT OF TRANSPORTATION

MIDWEST GUARDRAIL SYSTEM TYPICAL RAILING DELINEATION AND DIKE POSITIONING DETAILS

NO SCALE

RSP A77N4 DATED JULY 19, 2013 SUPPLEMENTS THE STANDARD PLANS BOOK DATED 2010.

REVISED STANDARD PLAN RSP A77N4

2010 REVISED STANDARD PLAN RSP A77N4

7-10-13

Dist	COUNTY	ROUTE	POST MILES TOTAL PROJECT	SHEET No.	TOTAL SHEETS
11	SD	8	R25.9/R32.2	36	67

Randell D. Hiatt
REGISTERED CIVIL ENGINEER

July 19, 2013
PLANS APPROVAL DATE

REGISTERED PROFESSIONAL ENGINEER
Randell D. Hiatt
No. C50200
Exp. 6-30-15
CIVIL
STATE OF CALIFORNIA

THE STATE OF CALIFORNIA OR ITS OFFICERS OR AGENTS SHALL NOT BE RESPONSIBLE FOR THE ACCURACY OR COMPLETENESS OF SCANNED COPIES OF THIS PLAN SHEET.

TO ACCOMPANY PLANS DATED 08-11-14

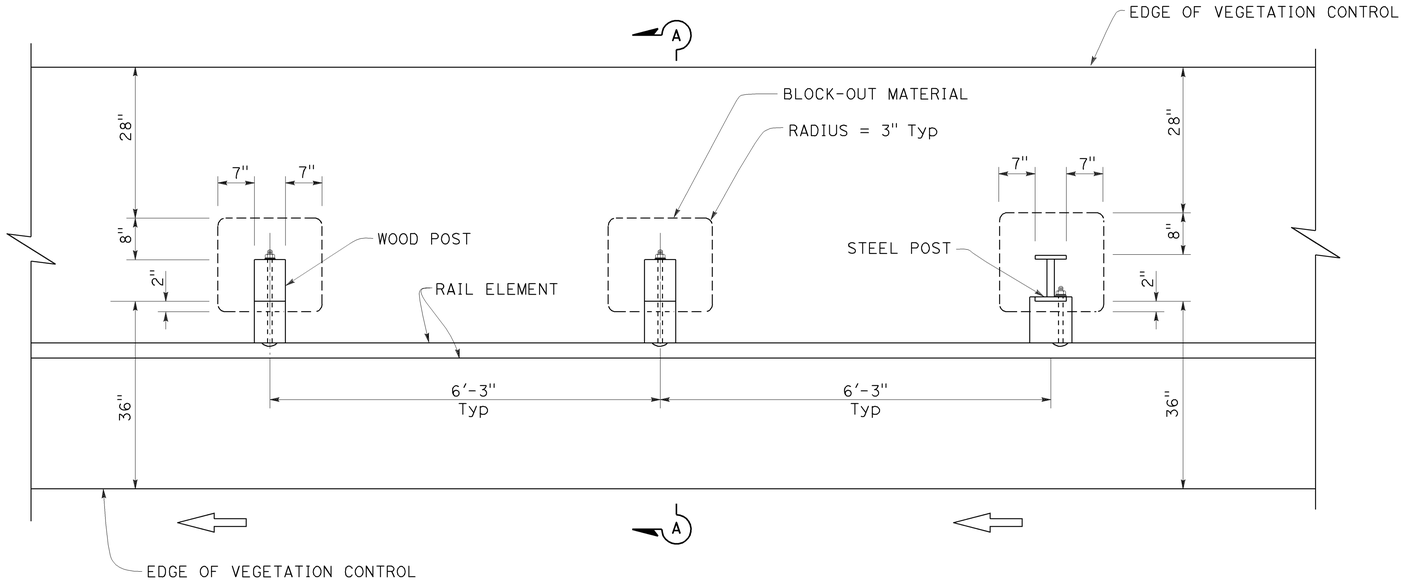

PLAN

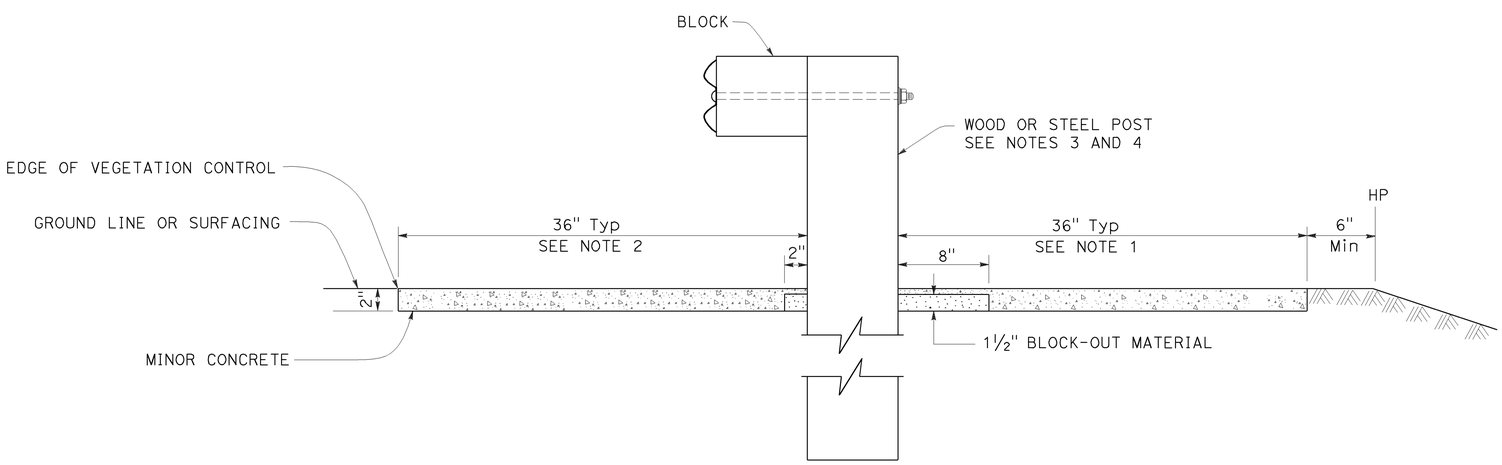

SECTION A-A

NOTES:

1. Where the distance between back of post and hinge point is less than 42", construct vegetation control to 6" from hinge point while maintaining the 8" block-out at back of post. If the 8" block-out at back of post can not be maintained, construct vegetation control flush with the back edge of post.
2. Where dike is constructed under railing, construct vegetation control to back edge of dike. Where paved shoulder is constructed within 36" in front of the post, construct vegetation control to the edge of paved shoulder.
3. For wood post sizes, see Revised Standard Plan RSP A77N1.
4. For steel post sizes, see Revised Standard Plan RSP A77N2.
5. For details not shown, see Revised Standard Plans RSP A77L1 and RSP A77L2.

STATE OF CALIFORNIA
DEPARTMENT OF TRANSPORTATION

MIDWEST GUARDRAIL SYSTEM TYPICAL VEGETATION CONTROL STANDARD RAILING SECTION

NO SCALE

RSP A77N5 DATED JULY 19, 2013 SUPPLEMENTS THE STANDARD PLANS BOOK DATED 2010.

REVISED STANDARD PLAN RSP A77N5

2010 REVISED STANDARD PLAN RSP A77N5

7-3-13

Dist	COUNTY	ROUTE	POST MILES TOTAL PROJECT	SHEET No.	TOTAL SHEETS
11	SD	8	R25.9/R32.2	37	67

Randell D. Hiatt
REGISTERED CIVIL ENGINEER

July 19, 2013
PLANS APPROVAL DATE

REGISTERED PROFESSIONAL ENGINEER
Randell D. Hiatt
No. C50200
Exp. 6-30-15
CIVIL
STATE OF CALIFORNIA

THE STATE OF CALIFORNIA OR ITS OFFICERS OR AGENTS SHALL NOT BE RESPONSIBLE FOR THE ACCURACY OR COMPLETENESS OF SCANNED COPIES OF THIS PLAN SHEET.

TO ACCOMPANY PLANS DATED 08-11-14

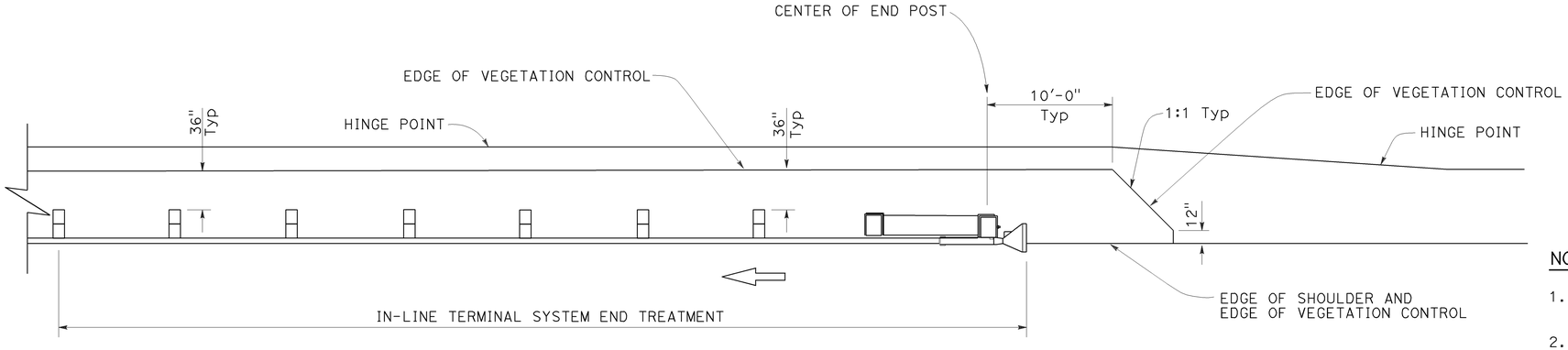

PLAN

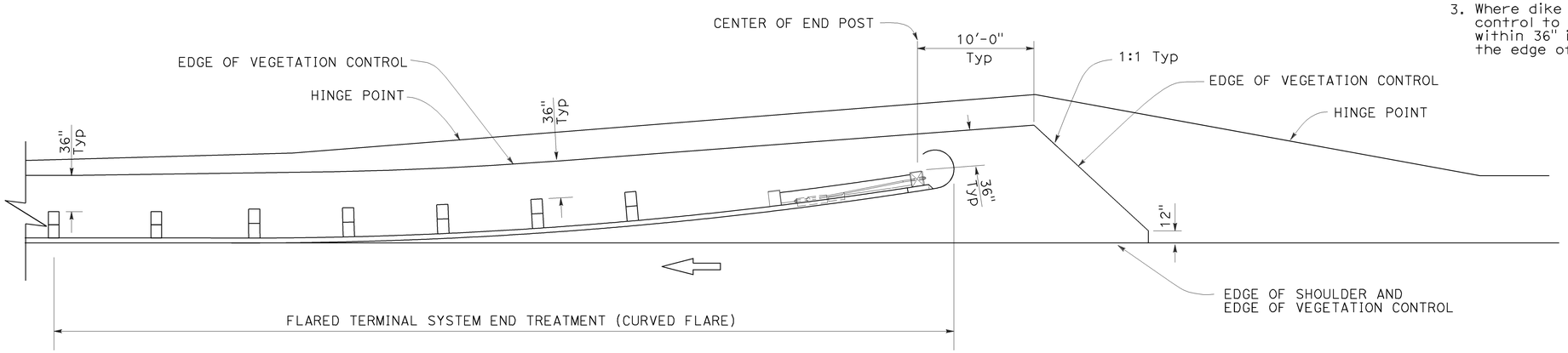

PLAN

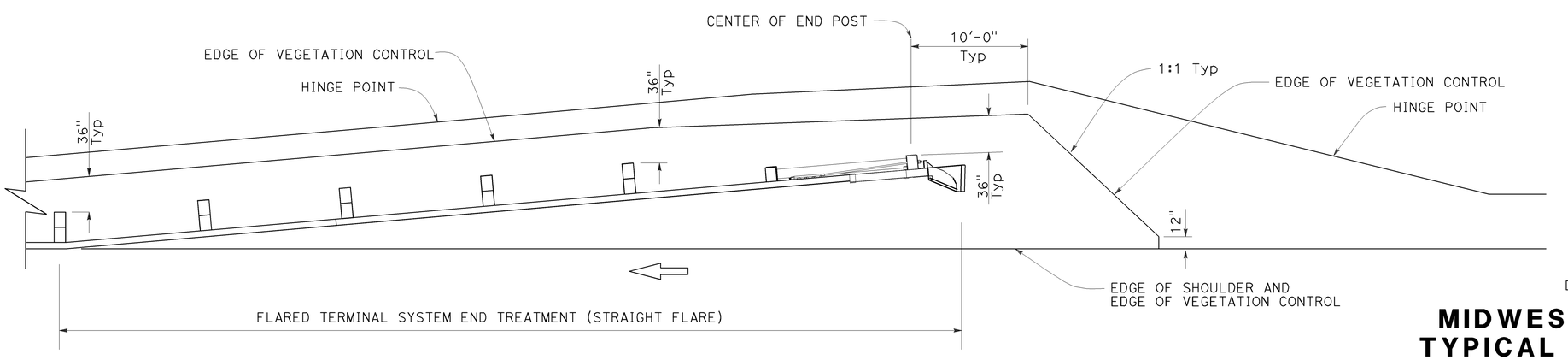

PLAN

NOTES:

1. See Revised Standard Plan RSP A77N5 for additional vegetation control details.
2. Where the distance between back of post and hinge point is less than 42", construct vegetation control to 6" from hinge point while maintaining the 8" block-out at back of post. If the 8" block-out at back of post can not be maintained, construct vegetation control flush with the back edge of post.
3. Where dike is constructed under railing, construct vegetation control to back edge of dike. Where paved shoulder is constructed within 36" in front of the post, construct vegetation control to the edge of paved shoulder.

STATE OF CALIFORNIA
DEPARTMENT OF TRANSPORTATION

MIDWEST GUARDRAIL SYSTEM TYPICAL VEGETATION CONTROL FOR TERMINAL SYSTEM END TREATMENTS

NO SCALE

RSP A77N6 DATED JULY 19, 2013 SUPPLEMENTS THE STANDARD PLANS BOOK DATED 2010.

REVISED STANDARD PLAN RSP A77N6

2010 REVISED STANDARD PLAN RSP A77N6

6-12-13

Dist	COUNTY	ROUTE	POST MILES TOTAL PROJECT	SHEET No.	TOTAL SHEETS
11	SD	8	R25.9/R32.2	38	67

Randell D. Hiatt
REGISTERED CIVIL ENGINEER

July 19, 2013
PLANS APPROVAL DATE

REGISTERED PROFESSIONAL ENGINEER
Randell D. Hiatt
No. C50200
Exp. 6-30-15
CIVIL
STATE OF CALIFORNIA

THE STATE OF CALIFORNIA OR ITS OFFICERS OR AGENTS SHALL NOT BE RESPONSIBLE FOR THE ACCURACY OR COMPLETENESS OF SCANNED COPIES OF THIS PLAN SHEET.

TO ACCOMPANY PLANS DATED 08-11-14

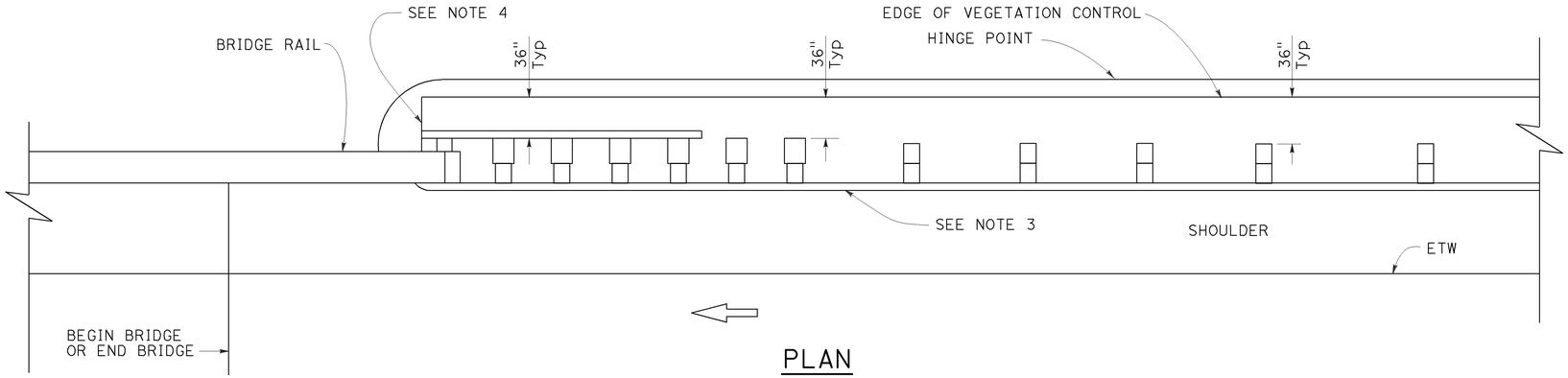

PLAN

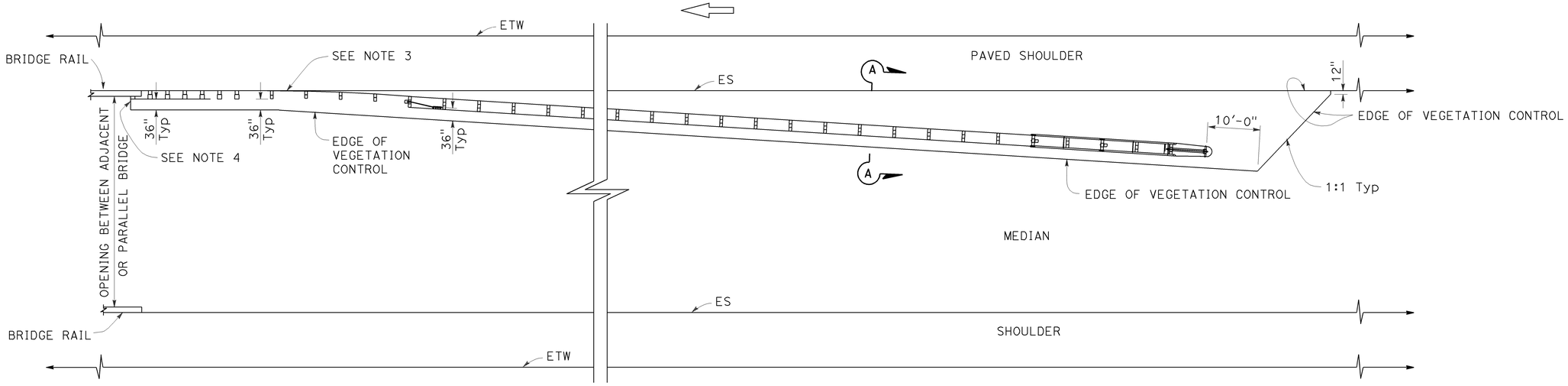

PLAN

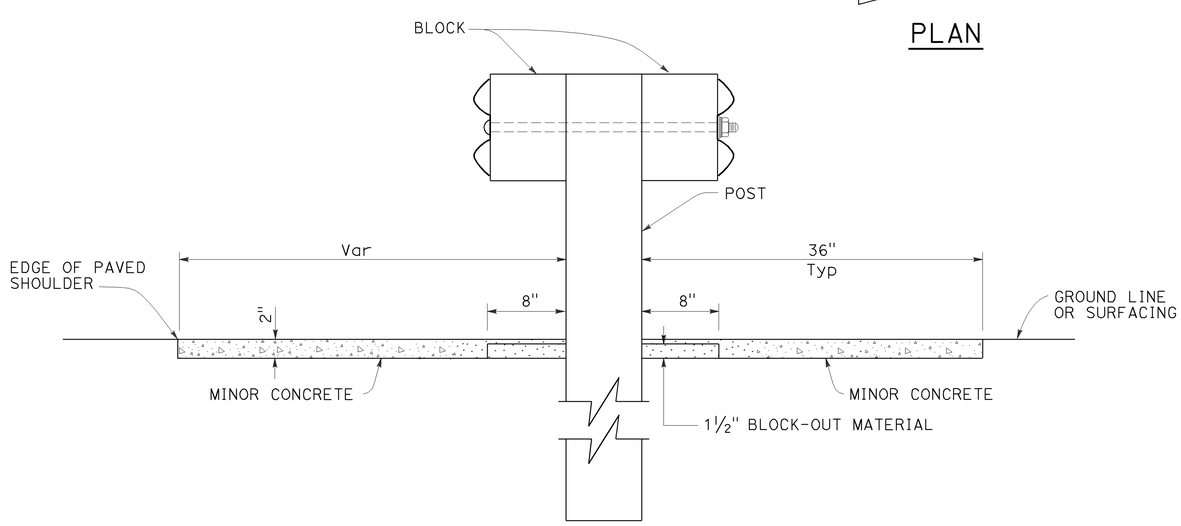

SECTION A-A

NOTES:

1. See Revised Standard Plan RSP A77N5 for additional vegetation control details.
2. Where the distance between back of post and hinge point is less than 42", construct vegetation control to 6" from hinge point while maintaining the 8" block-out at back of post. If the 8" block-out at back of post can not be maintained, construct vegetation control flush with the back edge of post.
3. Where dike is constructed under railing, construct vegetation control to back edge of dike. Where paved shoulder is constructed within 36" in front of the post, construct vegetation control to the edge of paved shoulder.
4. End vegetation control at end of backside rail element.

STATE OF CALIFORNIA
DEPARTMENT OF TRANSPORTATION

MIDWEST GUARDRAIL SYSTEM TYPICAL VEGETATION CONTROL AT STRUCTURE APPROACH

NO SCALE

RSP A77N7 DATED JULY 19, 2013 SUPPLEMENTS THE STANDARD PLANS BOOK DATED 2010.

REVISED STANDARD PLAN RSP A77N7

2010 REVISED STANDARD PLAN RSP A77N7

6-12-13

Dist	COUNTY	ROUTE	POST MILES TOTAL PROJECT	SHEET No.	TOTAL SHEETS
11	SD	8	R25.9/R32.2	39	67

Randell D. Hiatt
REGISTERED CIVIL ENGINEER

July 19, 2013
PLANS APPROVAL DATE

REGISTERED PROFESSIONAL ENGINEER
Randell D. Hiatt
No. C50200
Exp. 6-30-15
CIVIL
STATE OF CALIFORNIA

THE STATE OF CALIFORNIA OR ITS OFFICERS OR AGENTS SHALL NOT BE RESPONSIBLE FOR THE ACCURACY OR COMPLETENESS OF SCANNED COPIES OF THIS PLAN SHEET.

TO ACCOMPANY PLANS DATED 08-11-14

NOTES:

1. See Revised Standard Plan RSP A77N5 for additional vegetation control details.
2. Where the distance between back of post and hinge point is less than 42", construct vegetation control to 6" from hinge point while maintaining the 8" block-out at back of post. If the 8" block-out at back of post can not be maintained, construct vegetation control flush with the back edge of post.
3. Where dike is constructed under railing, construct vegetation control to back edge of dike. Where paved shoulder is constructed within 36" in front of the post, construct vegetation control to the edge of paved shoulder.

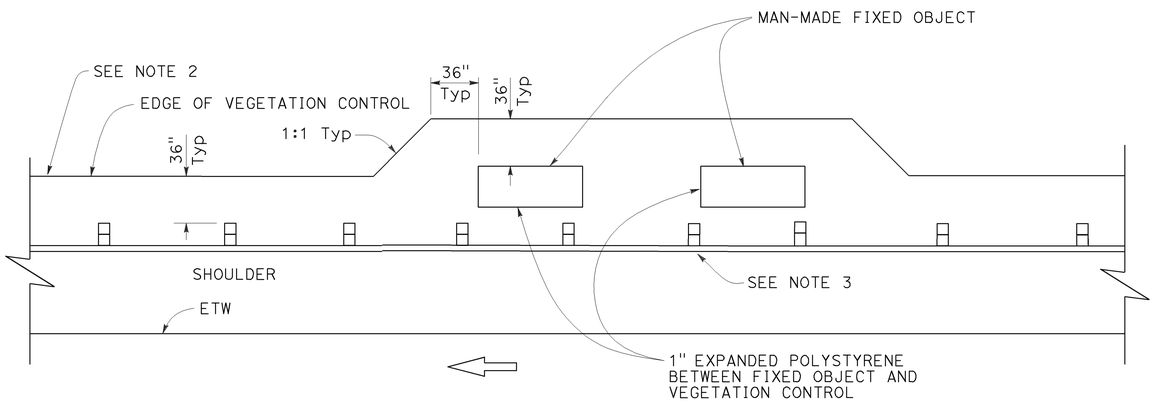

PLAN

Fixed object(s) on shoulder

STATE OF CALIFORNIA
DEPARTMENT OF TRANSPORTATION

MIDWEST GUARDRAIL SYSTEM TYPICAL VEGETATION CONTROL AT FIXED OBJECT

NO SCALE

RSP A77N8 DATED JULY 19, 2013 SUPPLEMENTS THE STANDARD PLANS BOOK DATED 2010.

REVISED STANDARD PLAN RSP A77N8

2010 REVISED STANDARD PLAN RSP A77N8

6-12-13

Dist	COUNTY	ROUTE	POST MILES TOTAL PROJECT	SHEET No.	TOTAL SHEETS
11	SD	8	R25.9/R32.2	40	67

Randell D. Hiatt
REGISTERED CIVIL ENGINEER

July 19, 2013
PLANS APPROVAL DATE

REGISTERED PROFESSIONAL ENGINEER
Randell D. Hiatt
No. C50200
Exp. 6-30-15
CIVIL
STATE OF CALIFORNIA

THE STATE OF CALIFORNIA OR ITS OFFICERS OR AGENTS SHALL NOT BE RESPONSIBLE FOR THE ACCURACY OR COMPLETENESS OF SCANNED COPIES OF THIS PLAN SHEET.

TO ACCOMPANY PLANS DATED 08-11-14

NOTES:

1. See Revised Standard Plan RSP A77N5 for additional vegetation control details.
2. Where dike is constructed under railing, construct vegetation control to back edge of dike. Where paved shoulder is constructed within 36" in front of the post, construct vegetation control to the edge of paved shoulder.

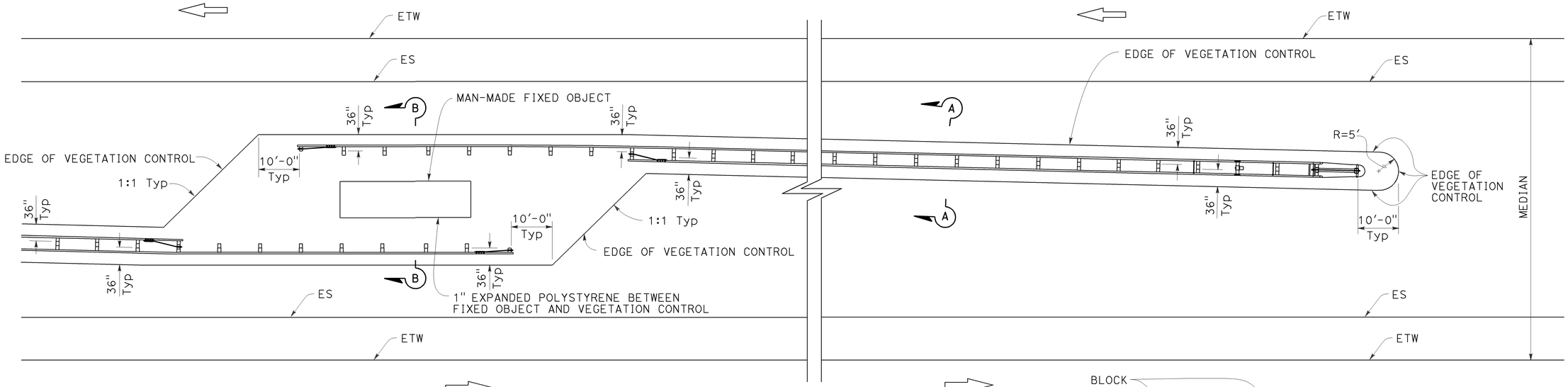

PLAN

Fixed object(s) in median

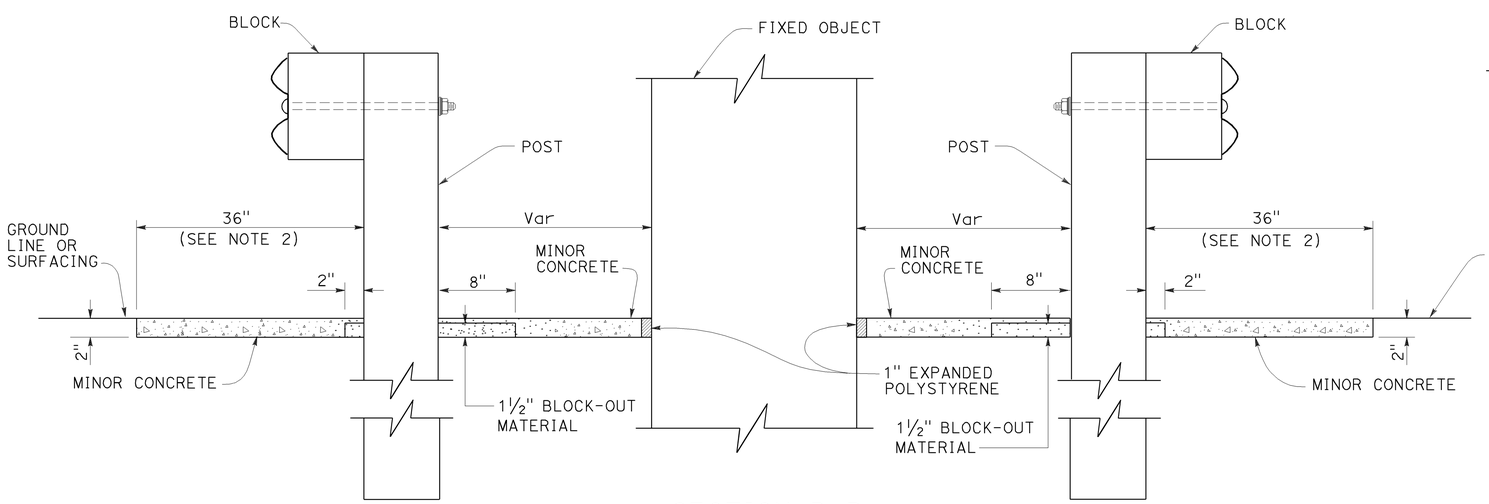

SECTION B-B

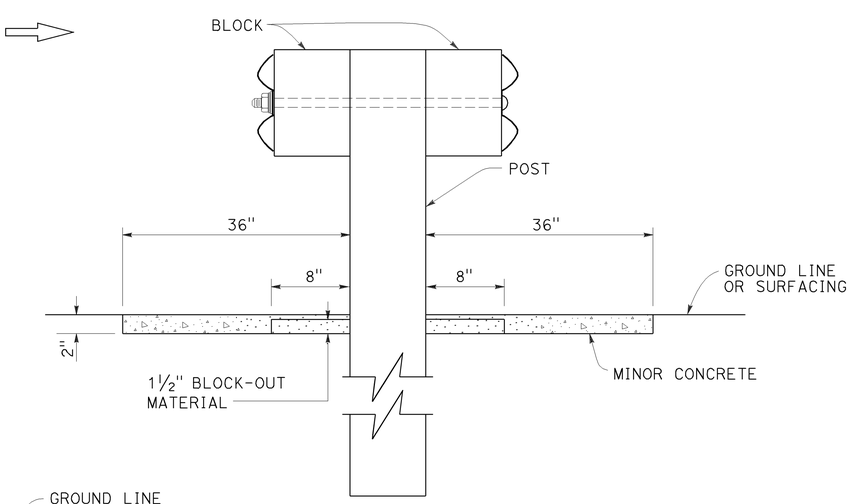

SECTION A-A

STATE OF CALIFORNIA
DEPARTMENT OF TRANSPORTATION

MIDWEST GUARDRAIL SYSTEM TYPICAL VEGETATION CONTROL AT FIXED OBJECT

NO SCALE

RSP A77N9 DATED JULY 19, 2013 SUPPLEMENTS THE STANDARD PLANS BOOK DATED 2010.

REVISED STANDARD PLAN RSP A77N9

2010 REVISED STANDARD PLAN RSP A77N9

6-12-13

Dist	COUNTY	ROUTE	POST MILES TOTAL PROJECT	SHEET No.	TOTAL SHEETS
11	SD	8	R25.9/R32.2	41	67

Randell D. Hiatt
REGISTERED CIVIL ENGINEER

July 19, 2013
PLANS APPROVAL DATE

REGISTERED PROFESSIONAL ENGINEER
Randell D. Hiatt
No. C50200
Exp. 6-30-15
CIVIL
STATE OF CALIFORNIA

THE STATE OF CALIFORNIA OR ITS OFFICERS OR AGENTS SHALL NOT BE RESPONSIBLE FOR THE ACCURACY OR COMPLETENESS OF SCANNED COPIES OF THIS PLAN SHEET.

TO ACCOMPANY PLANS DATED 08-11-14

2010 REVISED STANDARD PLAN RSP A77N10

NOTES:

1. See Revised Standard Plan RSP A77N5 for additional vegetation control details.
2. Where dike is constructed under railing, construct vegetation control to back edge of dike. Where paved shoulder is constructed within 36" in front of the post, construct vegetation control to the edge of paved shoulder.

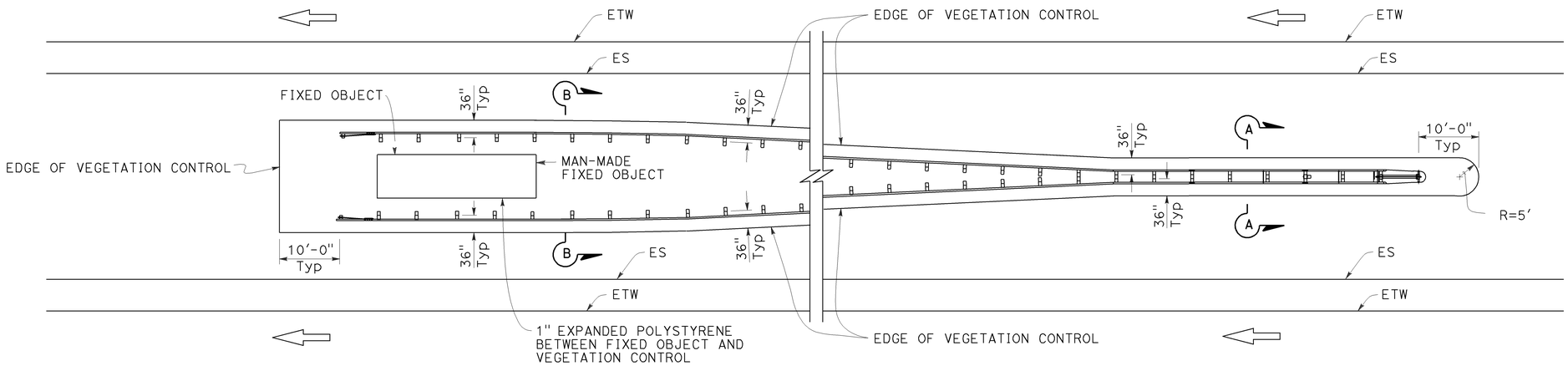

PLAN

Fixed object(s) between separate roadbeds
(One-Way Traffic)

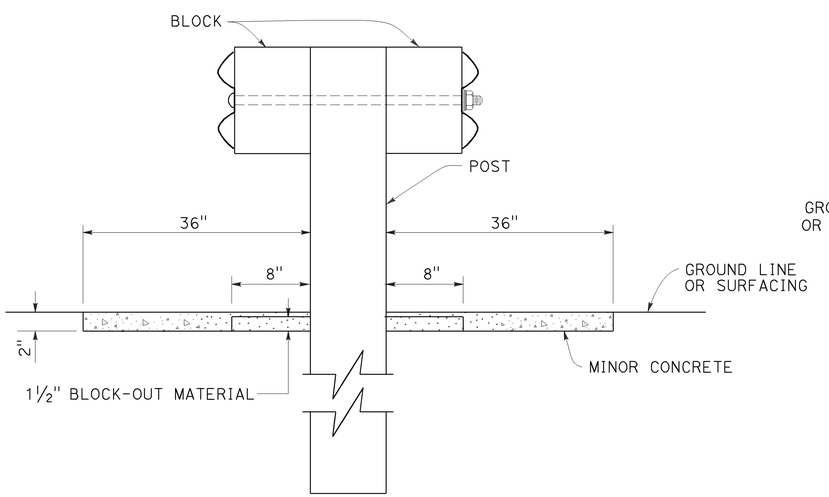

SECTION A-A

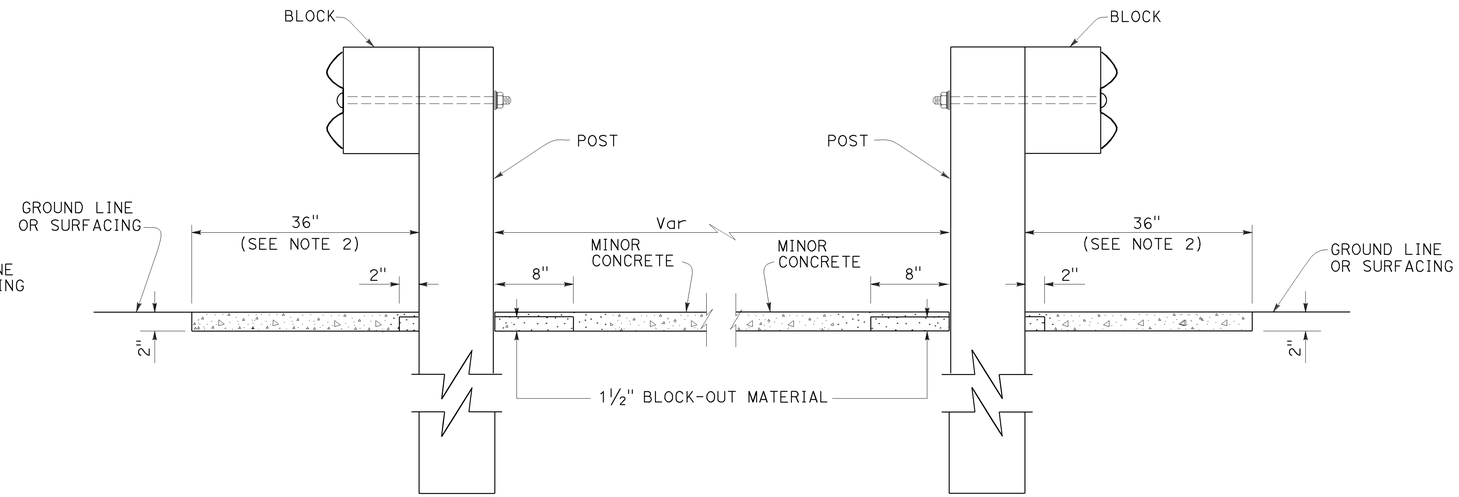

SECTION B-B

STATE OF CALIFORNIA
DEPARTMENT OF TRANSPORTATION

MIDWEST GUARDRAIL SYSTEM TYPICAL VEGETATION CONTROL AT FIXED OBJECT

NO SCALE

RSP A77N10 DATED JULY 19, 2013 SUPPLEMENTS THE STANDARD PLANS BOOK DATED 2010.

REVISED STANDARD PLAN RSP A77N10

6-12-13

Dist	COUNTY	ROUTE	POST MILES TOTAL PROJECT	SHEET No.	TOTAL SHEETS
11	SD	8	R25.9/R32.2	42	67

Randell D. Hiatt
REGISTERED CIVIL ENGINEER

November 15, 2013
PLANS APPROVAL DATE

REGISTERED PROFESSIONAL ENGINEER
Randell D. Hiatt
No. C50200
Exp. 6-30-15
CIVIL
STATE OF CALIFORNIA

THE STATE OF CALIFORNIA OR ITS OFFICERS OR AGENTS SHALL NOT BE RESPONSIBLE FOR THE ACCURACY OR COMPLETENESS OF SCANNED COPIES OF THIS PLAN SHEET.

TO ACCOMPANY PLANS DATED 08-11-14

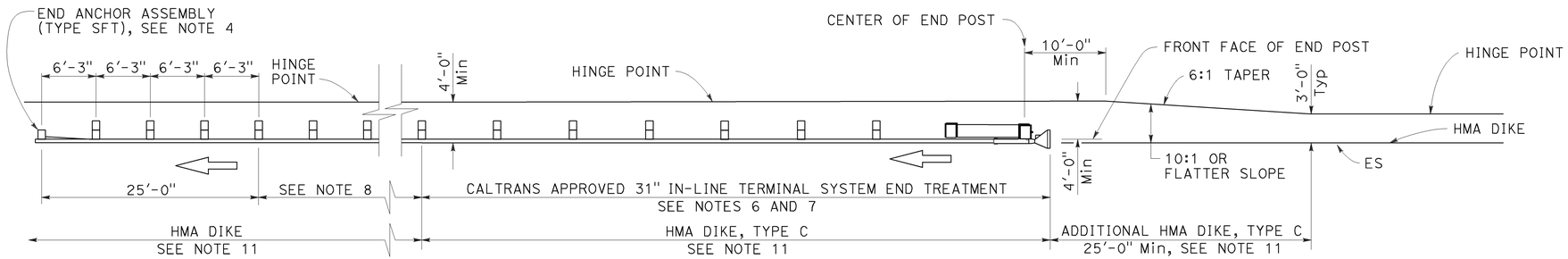

TYPE 11A LAYOUT

(Embankment MGS installation with 31" in-line end treatment at traffic approach end of railing) see Note 5

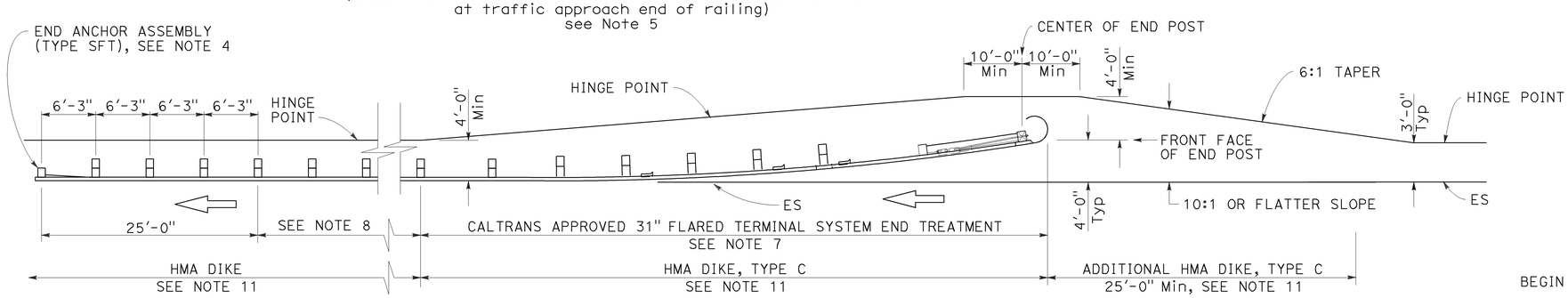

TYPE 11B LAYOUT

(Embankment MGS installation with 31" flared end treatment at traffic approach end of railing) see Note 5

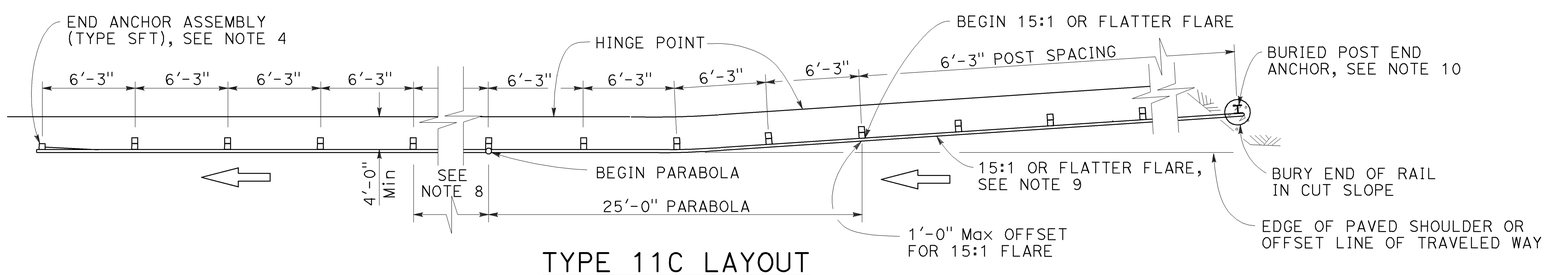

TYPE 11C LAYOUT

(Embankment MGS installation with buried end anchor treatment at traffic approach end of railing) see Notes 5 and 11

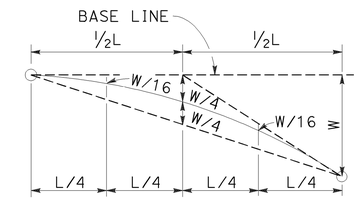

TYPICAL PARABOLIC LAYOUT

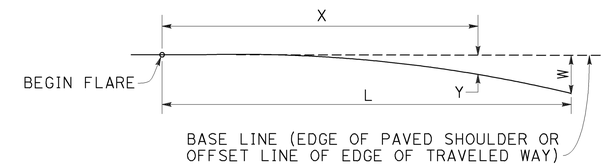

$$Y = \frac{WX^2}{L^2}$$

Y = OFFSET FROM BASE LINE
W = MAXIMUM OFFSET
X = DISTANCE ALONG BASE LINE
L = LENGTH OF FLARE

PARABOLIC FLARE OFFSETS

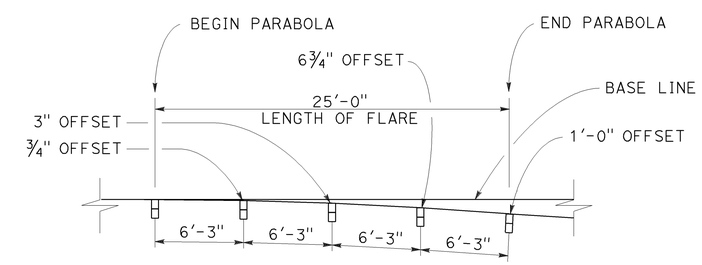

TYPICAL FLARE OFFSETS FOR 1 FOOT Max END OFFSET

NOTES:

1. Line post, blocks and hardware to be used are shown on Revised Standard Plans RSP A77L1, RSP A77L2, RSP A77M1, RSP A77N1 and RSP A77N2.
2. MGS post spacing to be 6'-3" center to center, except as otherwise noted.
3. Except as noted, line posts are 6" x 8" x 6'-0" wood with 6" x 12" x 1'-2" wood blocks. W6 x 8.5 or W6 x 9 steel posts, 6'-0" in length, with 6" x 12" x 1'-2" notched wood blocks or recycled plastic blocks may be used for 6" x 8" x 6'-0" wood post with 6" x 12" x 1'-2" wood blocks where applicable and when specified.
4. For End Anchor Assembly (Type SFT) details, see Revised Standard Plan RSP A77S1.
5. Layout Types 11A, 11B or 11C are typically used where MGS is recommended to shield embankment slopes and a crashworthy end treatment is required for only one direction of traffic.
6. 31" in-line terminal system end treatments are used where site conditions will not accommodate a flared end treatment.
7. The type of 31" terminal system end treatment to be used will be shown on the Project Plans.
8. Dependent on site conditions (embankment height and side slope), construction of additional MGS (length equal to multiples of 12'-6" with 6'-3" post spacing) may be advisable.
9. The 15:1 or flatter flare used with buried end anchors is based on the edge of the paved shoulder or offset line of edge of the traveled way. The length of MGS within the 15:1 or flatter flare is based on site conditions and should be a length equal to multiples of 12'-6".
10. For details of the buried post end anchor used with Type 11C Layout, see Revised Standard Plan RSP A77T2.
11. Where placement of dike is required with MGS installations, see Revised Standard Plan RSP A77N4 for dike positioning details.

STATE OF CALIFORNIA
DEPARTMENT OF TRANSPORTATION

MIDWEST GUARDRAIL SYSTEM TYPICAL LAYOUTS FOR EMBANKMENTS

NO SCALE

RSP A77P1 DATED NOVEMBER 15, 2013 SUPERSEDES RSP A77P1 DATED JULY 19, 2013 THAT SUPPLEMENTS THE STANDARD PLANS BOOK DATED 2010.

REVISED STANDARD PLAN RSP A77P1

2010 REVISED STANDARD PLAN RSP A77P1

10-4-13

Dist	COUNTY	ROUTE	POST MILES TOTAL PROJECT	SHEET No.	TOTAL SHEETS
11	SD	8	R25.9/R32.2	43	67

Randell D. Hiatt
REGISTERED CIVIL ENGINEER

July 19, 2013
PLANS APPROVAL DATE

REGISTERED PROFESSIONAL ENGINEER
Randell D. Hiatt
No. C50200
Exp. 6-30-15
CIVIL
STATE OF CALIFORNIA

THE STATE OF CALIFORNIA OR ITS OFFICERS OR AGENTS SHALL NOT BE RESPONSIBLE FOR THE ACCURACY OR COMPLETENESS OF SCANNED COPIES OF THIS PLAN SHEET.

TO ACCOMPANY PLANS DATED 08-11-14

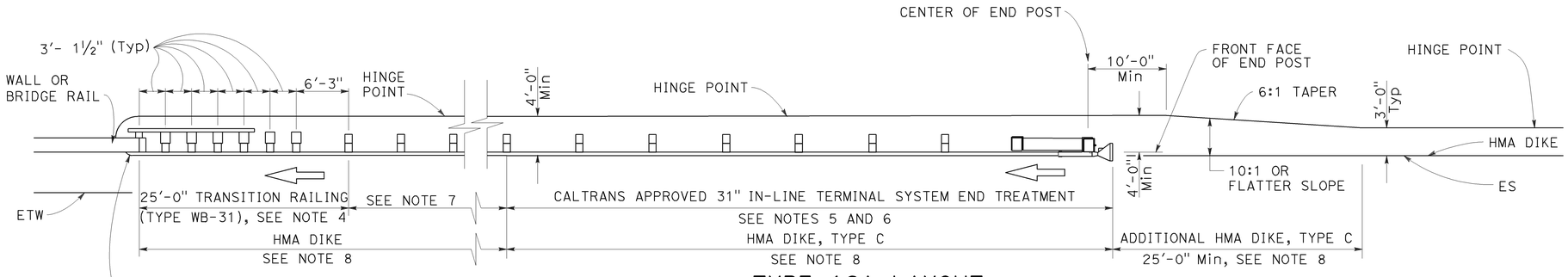

TYPE 12A LAYOUT

(MGS installation at structure approach with
31" In-line end treatment at traffic approach end of railing)
See Notes 9

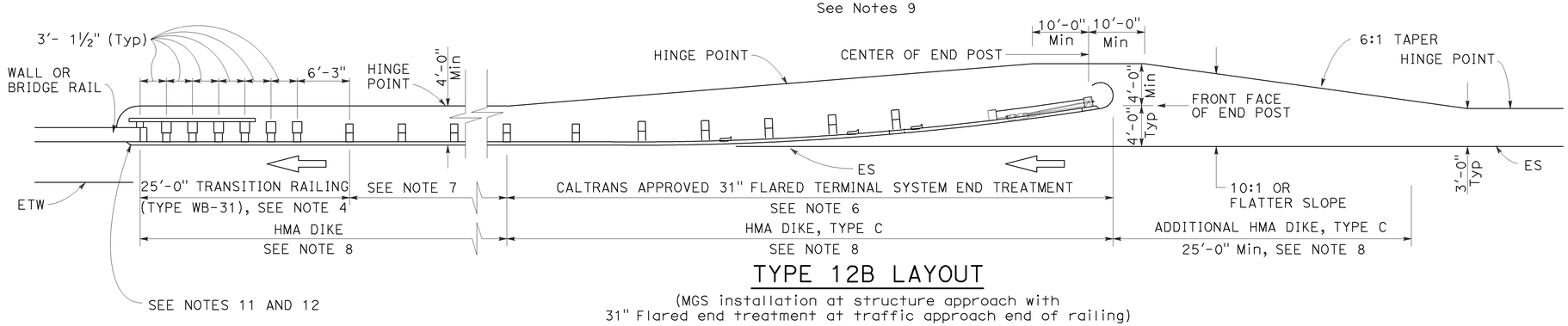

TYPE 12B LAYOUT

(MGS installation at structure approach with
31" Flared end treatment at traffic approach end of railing)
See Notes 9

NOTES:

1. Line post, blocks and hardware to be used are shown on Revised Standard Plans RSP A77L1, RSP A77L2, RSP A77M1, RSP A77N1 and RSP A77N2.
2. MGS post spacing to be 6'-3" center to center, except as otherwise noted.
3. Except as noted, line posts are 6" x 8" x 6'-0" wood with 6" x 12" x 1'-2" wood blocks. W6 x 8.5 or W6 x 9 steel posts, 6'-0" in length, with 6" x 12" x 1'-2" notched wood blocks or plastic blocks may be used for 6" x 8" x 6'-0" wood posts with 6" x 12" x 1'-2" wood blocks where applicable and when specified.
4. For Transition Railing (Type WB-31) details for Types 12A and 12B Layouts, see Revised Standard Plan RSP A77U4.
5. 31" in-line terminal system end treatments are used where site conditions will not accommodate a 31" flared end treatment.
6. The type 31" of terminal system end treatment to be used will be shown on the Project Plans.
7. Dependent on site conditions (embankment height, side slopes, or other fixed objects), it may be advisable to construct additional guard railing (a length equal to multiples of 12'-6" with 6'-3" post spacing) between the transition railing and end treatment. A 12.5 degree angle of departure can be drawn on the Project Plans from the edge of traveled way through the outer most point of the fixed object to determine the additional length of railing needed.
8. Where placement of dike is required with guard railing installations, see Revised Standard Plan RSP A77N4 for dike positioning details.
9. Type 12A or Type 12B Layouts are typically used:
   a. To the right of approaching traffic, at the end of a structure, on two-lane conventional highway where the roadbed width across the structure is less than 40 feet.
   b. To the left of approaching traffic, at the end of a structure, on two-lane conventional highway where the roadbed width across the structure is less than 40 feet.
   c. To the right of approaching traffic at the end of each structure on multilane freeways or expressways with separate adjacent or parallel bridges.
   d. To the right of approaching traffic at the end of the structure on multilane freeways or expressways with decked median on the bridge.
10. See Revised Standard Plan RSP A77Q3 for typical layout used left of approaching traffic at the ends of each structure on multilane freeways or expressways with separate adjacent or parallel bridges.
11. For additional details of typical connections to bridge rail, see Connection Detail AA on Revised Standard Plans RSP A77U1 and RSP A77U2 and Connection Detail FF on Revised Standard Plans RSP A77V1 and RSP A77V2.
12. For additional details of a typical connection to walls or abutments, see Revised Standard Plan RSP A77U3.

STATE OF CALIFORNIA
DEPARTMENT OF TRANSPORTATION

MIDWEST GUARDRAIL SYSTEM TYPICAL LAYOUTS FOR STRUCTURE APPROACH

NO SCALE

RSP A77Q1 DATED JULY 19, 2013 SUPPLEMENTS THE STANDARD PLANS BOOK DATED 2010.

REVISED STANDARD PLAN RSP A77Q1

2010 REVISED STANDARD PLAN RSP A77Q1

6-19-13

Dist	COUNTY	ROUTE	POST MILES TOTAL PROJECT	SHEET No.	TOTAL SHEETS
11	SD	8	R25.9/R32.2	44	67

Randell D. Hiatt
REGISTERED CIVIL ENGINEER

July 19, 2013
PLANS APPROVAL DATE

REGISTERED PROFESSIONAL ENGINEER
Randell D. Hiatt
No. C50200
Exp. 6-30-15
CIVIL
STATE OF CALIFORNIA

THE STATE OF CALIFORNIA OR ITS OFFICERS OR AGENTS SHALL NOT BE RESPONSIBLE FOR THE ACCURACY OR COMPLETENESS OF SCANNED COPIES OF THIS PLAN SHEET.

TO ACCOMPANY PLANS DATED 08-11-14

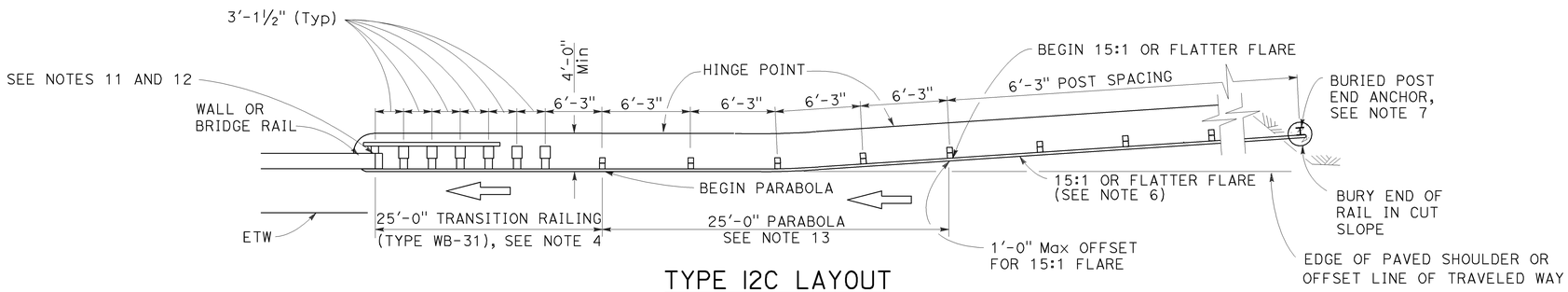

TYPE 12C LAYOUT

(MGS installation at structure approach with a Buried end anchor treatment at traffic approach end of railing)
See Notes 8 and 9

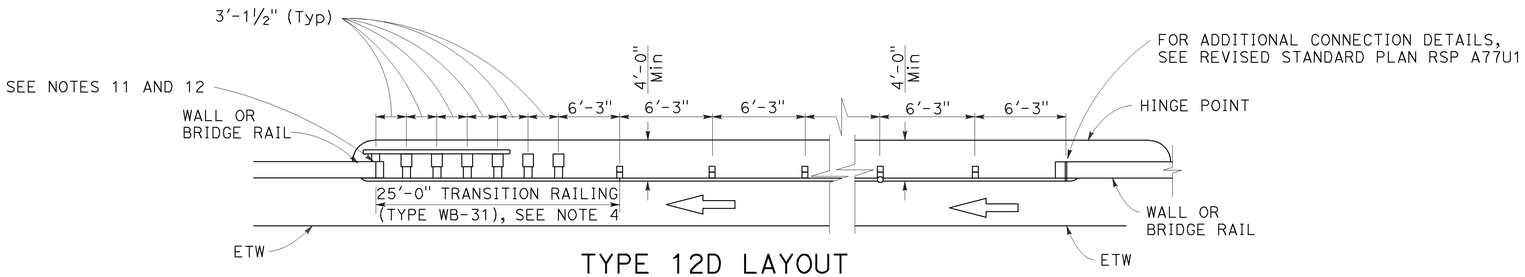

TYPE 12D LAYOUT

(Continuous MGS installation between structures)
See Notes 5 and 9

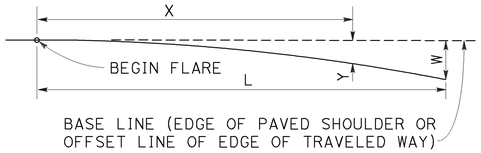

$$Y = \frac{WX^2}{L^2}$$

Y = OFFSET FROM BASE LINE
W = MAXIMUM OFFSET
X = DISTANCE ALONG BASE LINE
L = LENGTH OF FLARE

PARABOLIC FLARE OFFSETS

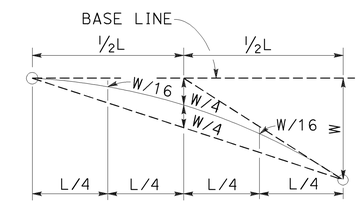

TYPICAL PARABOLIC LAYOUT

NOTES:

1. Line post, blocks and hardware to be used are shown on Revised Standard Plans RSP A77L1, RSP A77L2, RSP A77M1, RSP A77N1 and RSP A77N2.
2. MGS post spacing to be 6'-3" center to center, except as otherwise noted.
3. Except as noted, line posts are 6" x 8" x 6'-0" m wood with 6" x 12" x 1'-2" wood blocks. W6 x 8.5 or W6 x 9 steel posts, 6'-0" in length, with 6" x 12" x 1'-2" notched wood blocks or plastic blocks may be used for 6" x 8" x 6'-0" wood posts with 6" x 12" x 1'-2" wood blocks where applicable and when specified.
4. For Transition Railing (Type WB-31) details for Types 12C and 12D Layouts, see Revised Standard Plan RSP A77U4.
5. Type 12D layout is typically used where continous MGS is recommended between structures.
6. The 15:1 or flatter flare for Type 12C Layout is based on the edge of the paved shoulder or offset line of edge of the traveled way. The length of MGS with the 15:1 or flatter flare is based on site conditions and should be a length equal to multiples of 12'-6".
7. For details of the buried post end anchor used with Type 12C Layout, see Revised Standard Plan RSP A77T2.
8. Where placement of dike is required with MGS installations, see Revised Standard Plan RSP A77N4 for dike positioning details.
9. Type 12C Layout is typically used:
   a. To the right of approaching traffic, at the end of the structure, on two-lane conventional highway where the roadbed width across the structure is less than 40 feet.
   b. To the left of approaching traffic, at each of a structure, on two-lane conventional highway where the roadbed width across the structure is less than 40 feet.
   c. To the right of approaching traffic at the end of each structure on multilane freeways or expressways with separate adjacent or parallel bridges.
   d. To the right of approaching traffic at the end of the structure on multilane freeways or expressways with decked median on the bridge.
10. See Revised Standard Plan RSP A77Q3 for typical layout used left of approaching traffic at the ends of each structure on multilane freeways or expressways with separate adjacent or parallel bridges.
11. For additional details of typical connections to bridge rail, see Connection Detail AA on Revised Standard Plans RSP A77U1 and RSP A77U2 and Connection Detail FF on Revised Standard Plans RSP A77V1 and RSP A77V2.
12. For additional details of a typical connection to walls or abutments, see Revised Standard Plan RSP A77U3.
13. For typical flare offsets for 25'-0" length parabola with maximum offset of 1'-0", see Revised Standard Plan RSP A77P1.

STATE OF CALIFORNIA
DEPARTMENT OF TRANSPORTATION

MIDWEST GUARDRAIL SYSTEM TYPICAL LAYOUTS FOR STRUCTURE APPROACH AND BETWEEN STRUCTURES

NO SCALE

RSP A77Q2 DATED JULY 19, 2013 SUPPLEMENTS THE STANDARD PLANS BOOK DATED 2010.

REVISED STANDARD PLAN RSP A77Q2

2010 REVISED STANDARD PLAN RSP A77Q2

7-8-13

Dist	COUNTY	ROUTE	POST MILES TOTAL PROJECT	SHEET No.	TOTAL SHEETS
11	SD	8	R25.9/R32.2	45	67

Randell D. Hiatt
REGISTERED CIVIL ENGINEER

July 19, 2013
PLANS APPROVAL DATE

REGISTERED PROFESSIONAL ENGINEER
Randell D. Hiatt
No. C50200
Exp. 6-30-15
CIVIL
STATE OF CALIFORNIA

THE STATE OF CALIFORNIA OR ITS OFFICERS OR AGENTS SHALL NOT BE RESPONSIBLE FOR THE ACCURACY OR COMPLETENESS OF SCANNED COPIES OF THIS PLAN SHEET.

TO ACCOMPANY PLANS DATED 08-11-14

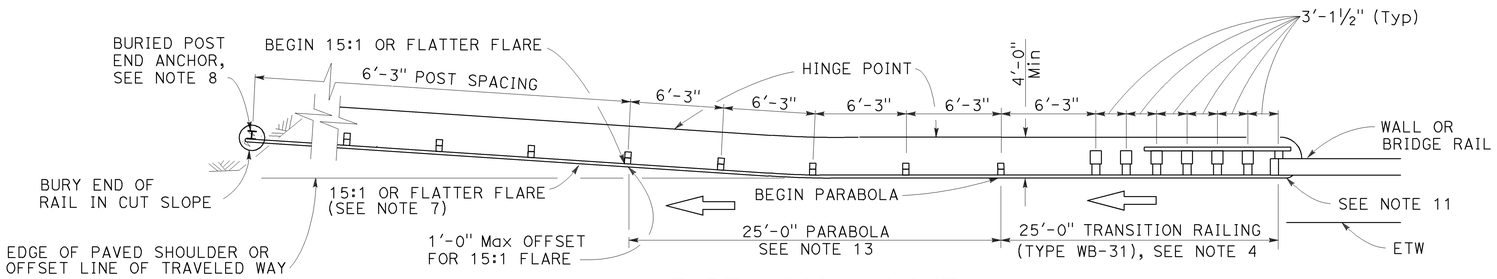

TYPE 12CC LAYOUT

(MGS installation at structure departure with a
Buried end anchor treatment at trailing end of railing)
See Notes 9 and 10

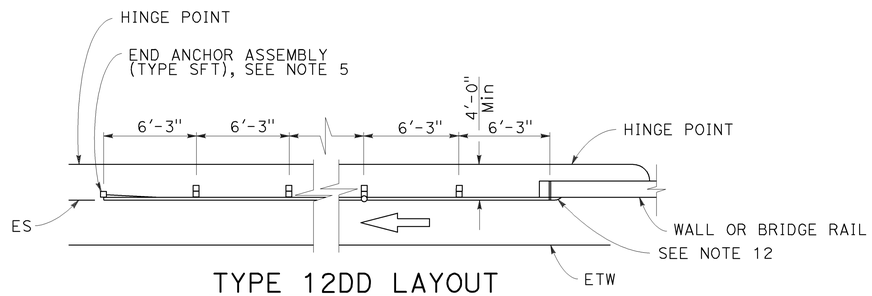

TYPE 12DD LAYOUT

(MGS installation at structure departure
With end anchor assembly at trailing end of railing)
See Notes 6 and 9

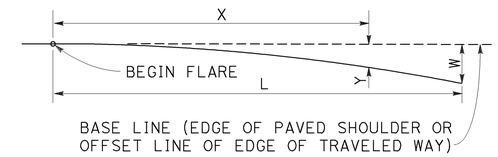

$$Y = \frac{WX^2}{L^2}$$

Y = OFFSET FROM BASE LINE
W = MAXIMUM OFFSET
X = DISTANCE ALONG BASE LINE
L = LENGTH OF FLARE

PARABOLIC FLARE OFFSETS

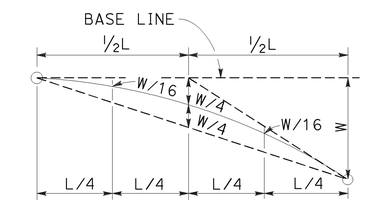

TYPICAL PARABOLIC LAYOUT

NOTES:

1. Line post, blocks and hardware to be used are shown on Revised Standard Plans RSP A77L1, RSP A77L2, RSP A77M1, RSP A77N1 and RSP A77N2.
2. MSG post spacing to be 6'-3" center to center, except as otherwise noted.
3. Except as noted, line posts are 6" x 8" x 6'-0" wood with 6" x 12" x 1'-2" wood blocks. W6 x 8.5 or W6 x 9 steel posts, 6'-0" in length, with 6" x 12" x 1'-2" notched wood blocks or notched recycled plastic blocks may be used for 6" x 8" x 6'-0" wood line posts with 6" x 12" x 1'-2" wood blocks where applicable and when specified.
4. For Transition Railing (Type WB-31) details for Type 12CC Layout, see Revised Standard Plan RSP A77U4.
5. For details of End Anchor Assembly (Type SFT) used with Type 12DD Layout, see Revised Standard Plan RSP A77S1.
6. Type 12DD layout is typically used to the right of traffic departing a structure on two-way conventional highways where the roadbed width across the structure is equal to or greater than 40 feet and MGS is recommended (embankment height, side slopes, other fixed objects). Length of railing to be equal to multiples of 12'-6". For MGS connection details to bridge rail, see Revised Standard Plans RSP A77U1 and RSP A77V1. For MGS connection details to wall, see Revised Standard Plan RSP A77U3.
7. The 15:1 or flatter flare for Type 12CC Layout is based on the edge of the paved shoulder or offset line of edge of the traveled way. The length of MGS within the 15:1 or flatter flare is based on site conditions and should be a length equal to multiples of 12'-6".
8. For details of the buried post end anchor used with Type 12CC Layout, see Revised Standard Plan RSP A77T2.
9. Where placement of dike is required with MGS installations, see Revised Standard Plan RSP A77N4 for dike positioning details.
10. Type 12CC Layout is typically used to the right of traffic departing a structure on two-way conventional highways where the roadbed width across the structure is less than 40 feet.
11. For additional details of a typical connection to bridge rail for Layout Type 12CC, see Connection Detail CC on Revised Standard Plan RSP A77U2 and Connection Detail HH on Revised Standard Plan RSP A77V2.
12. For additional details of a typical connection to bridge rail for Layout Type 12DD, see Connection Detail BB on Revised Standard Plan RSP A77U1 and Connection Detail GG on Revised Standard Plan RSP A77V1.
13. For typical flare offsets for 25'-0" length parabola with maximum offset of 1'-0", see Revised Standard Plan RSP A77P1.

STATE OF CALIFORNIA
DEPARTMENT OF TRANSPORTATION

MIDWEST GUARDRAIL SYSTEM TYPICAL LAYOUTS FOR STRUCTURE DEPARTURE

NO SCALE

RSP A77Q5 DATED JULY 19, 2013 SUPPLEMENTS THE STANDARD PLANS BOOK DATED 2010.

REVISED STANDARD PLAN RSP A77Q5

2010 REVISED STANDARD PLAN RSP A77Q5

6-20-13

Dist	COUNTY	ROUTE	POST MILES TOTAL PROJECT	SHEET No.	TOTAL SHEETS
11	SD	8	R25.9/R32.2	46	67

Randell D. Hiatt
REGISTERED CIVIL ENGINEER

July 19, 2013
PLANS APPROVAL DATE

REGISTERED PROFESSIONAL ENGINEER
Randell D. Hiatt
No. C50200
Exp. 6-30-15
CIVIL
STATE OF CALIFORNIA

THE STATE OF CALIFORNIA OR ITS OFFICERS OR AGENTS SHALL NOT BE RESPONSIBLE FOR THE ACCURACY OR COMPLETENESS OF SCANNED COPIES OF THIS PLAN SHEET.

TO ACCOMPANY PLANS DATED 08-11-14

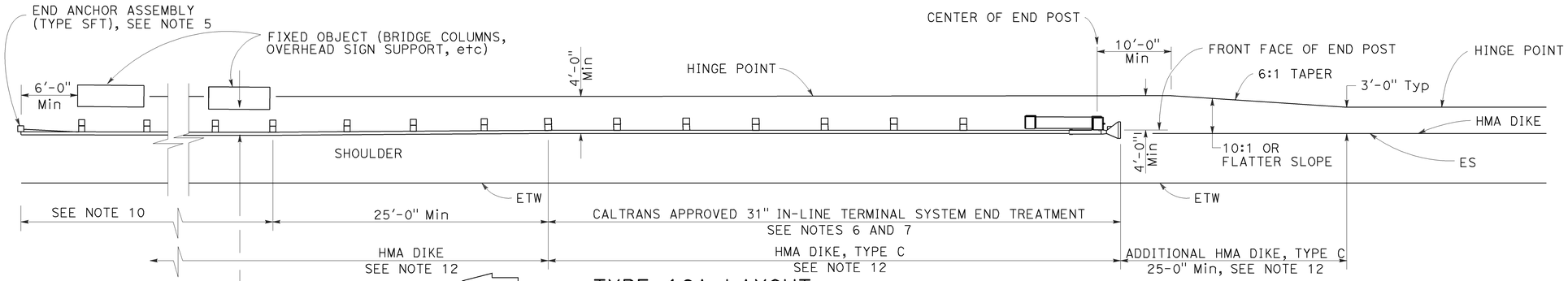

TYPE 16A LAYOUT

(MGS installation at roadside fixed object or objects with 31" in-line end treatment at traffic approach end of railing)
See Notes 11 and 12

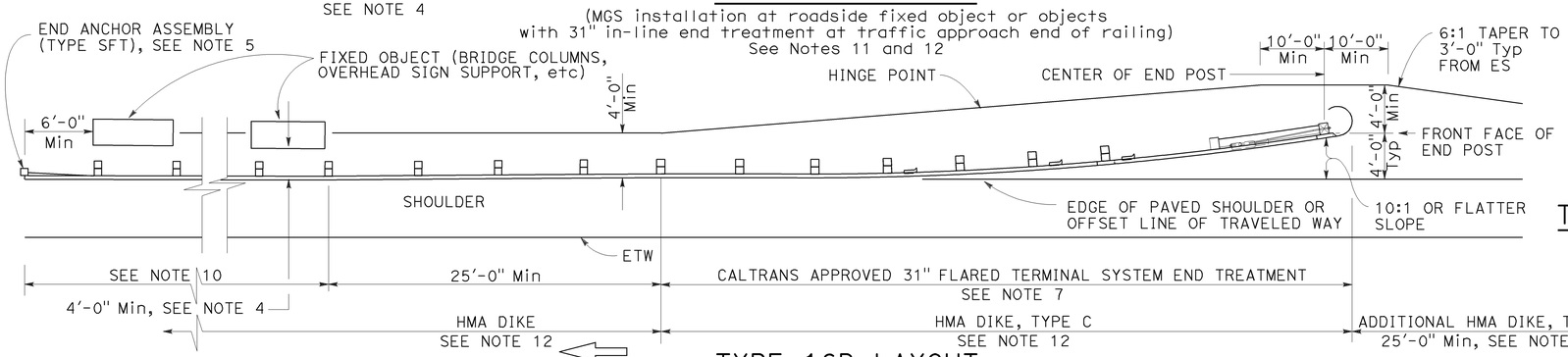

TYPE 16B LAYOUT

(MGS installation at roadside fixed object or objects with 31' flared end treatment at traffic approach end of railing)
See Notes 11 and 12

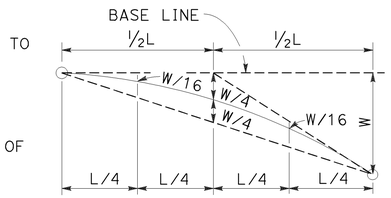

TYPIC AL PARABOLIC LAYOUT

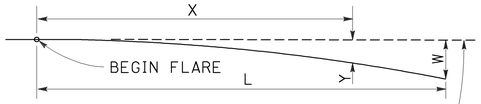

BASE LINE (EDGE OF PAVED SHOULDER OR OFFSET LINE OF EDGE OF TRAVELED WAY)

$$Y = \frac{WX^2}{L^2}$$

Y = OFFSET FROM BASE LINE
W = MAXIMUM OFFSET
X = DISTANCE ALONG BASE LINE
L = LENGTH OF FLARE

PARABOLIC FLARE OFFSETS

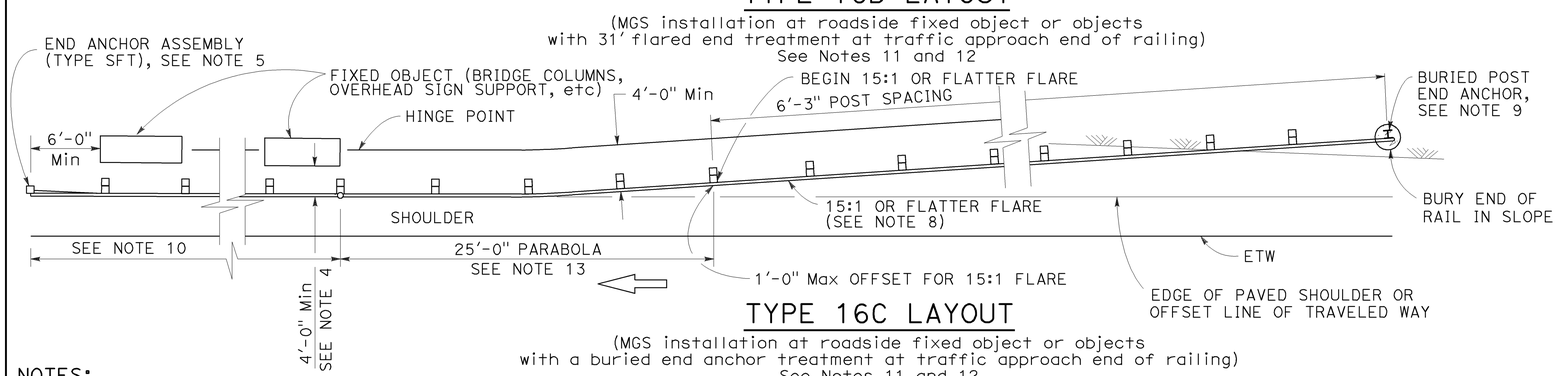

TYPE 16C LAYOUT

(MGS installation at roadside fixed object or objects with a buried end anchor treatment at traffic approach end of railing)
See Notes 11 and 12

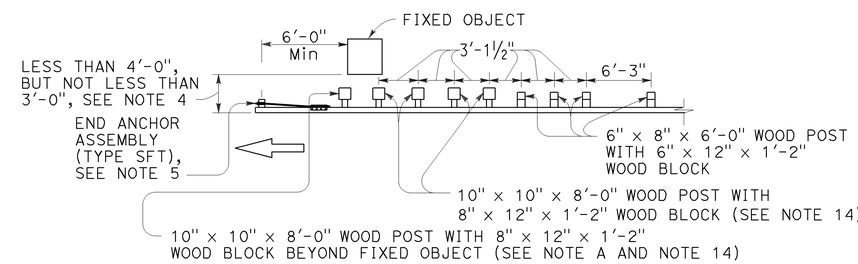

NOTE A: For a series of fixed objects (bridge columns, overhead sign supports, etc.) additional 10" x 10" x 8'-0" wood post with 8" x 12" x 1'-2" wood blocks at 3'-1½" center to center spacing are to be used between fixed objects.

STRENGTHENED MIDWEST GUARDRAIL SYSTEM SECTIONS FOR FIXED OBJECT

Use strengthened MGS sections with Types 16A, 16B or 16C layouts where minimum clearance between the face of the railing and fixed object(s) is less than 4'-0", but not less than 3'-0". See Note 4

NOTES:

1. Line post, blocks and hardware to be used are shown on Revised Standard Plans RSP A77L1, RSP A77L2, RSP A77M1, RSP A77N1 and RSP A77N2.
2. MGS post spacing to be 6'-3" center to center, except as otherwise noted.
3. Except as noted, line posts are 6" x 8" x 6'-0" wood with 6" x 12" x 1'-2" wood blocks. W6 x 8.5 or W6 x 9 steel posts, 6'-0" in length, with 6" x 12" x 1'-2" notched wood blocks or notched recycled plastic blocks may be used for 6" x 8" x 6'-0" wood line posts with 6" x 12" x 1'-2" wood blocks where applicable and when specified.
4. A 4'-0" minimum clearance is required between the face of the railing and the face of a fixed object located directly behind MGS sections with post spacing of 6'-3". Construct MGS as shown in the detail "Strengthened Midwest Guardrail System Sections for Fixed Object" on this plan, where the clearance between the face of the railing and the face of a fixed object is less than 4'-0", but not less than 3'-0". Where the clearance is less than 3'-0", a concrete wall or barrier should be constructed to shield the fixed object(s).
5. For End Anchor Assembly (Type SFT) details, see Revised Standard Plan RSP A77S1.
6. 31" in-line terminal system end treatments are used where site conditions will not accommodate a 31" flared end treatment.
7. The type of 31" terminal system to be used will be shown on the Project Plans.
8. The 15:1 or flatter flare used with Type 16C Layout is based on the edge of the paved shoulder or offset line of edge of the traveled way. The length of MGS within the 15:1 or flatter flare is based on site conditions and should be a length equal to multiples of 12'-6".
9. For details of the Buried Post End Anchor used with Type 16C Layout, see Revised Standard Plan RSP A77T2.
10. As site conditions dictate, construct additional MGS to shield fixed object(s). Additional MGS length equal to multiples of 12'-6". Post spacing at 6'-3" except as specified in Note 4.
11. Layout Types 16A, 16B or 16C are typically used where MGS is recommended to shield roadside fixed object(s) and a crashworthy 31" end treatment is required for only one direction of traffic.
12. Where placement of dike is required with MGS, see Revised Standard Plan RSP A77N4 for dike positioning details.
13. For typical flare offsets for 25'-0" length parabola with maximum offset of 1'-0", see Revised Standard Plan RSP A77P1.
14. W6 x 15 steel post, 8'-0" in length, with 8" x 12" x 1'-2" notched wood block or notched recycled plastic blocks may be used in place of the 10" x 10" x 8'-0" wood post with 8" x 12" x 1'-2" wood block shown in the detail "Strengthened Midwest Guardrail System Sections for Fixed Object".

STATE OF CALIFORNIA
DEPARTMENT OF TRANSPORTATION

MIDWEST GUARDRAIL SYSTEM TYPICAL LAYOUTS FOR ROADSIDE FIXED OBJECTS

NO SCALE

RSP A77R3 DATED JULY 19, 2013 SUPPLEMENTS THE STANDARD PLANS BOOK DATED 2010.

REVISED STANDARD PLAN RSP A77R3

2010 REVISED STANDARD PLAN RSP A77R3

6-20-13

Dist	COUNTY	ROUTE	POST MILES TOTAL PROJECT	SHEET No.	TOTAL SHEETS
11	SD	8	R25.9/R32.2	47	67

Randell D. Hiatt
REGISTERED CIVIL ENGINEER

November 15, 2013
PLANS APPROVAL DATE

REGISTERED PROFESSIONAL ENGINEER
Randell D. Hiatt
No. C50200
Exp. 6-30-15
CIVIL
STATE OF CALIFORNIA

THE STATE OF CALIFORNIA OR ITS OFFICERS OR AGENTS SHALL NOT BE RESPONSIBLE FOR THE ACCURACY OR COMPLETENESS OF SCANNED COPIES OF THIS PLAN SHEET.

TO ACCOMPANY PLANS DATED 08-11-14

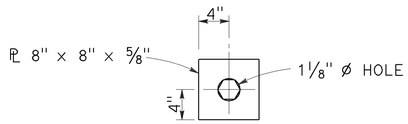

DETAIL "A"
CABLE CONNECTION
END PLATE

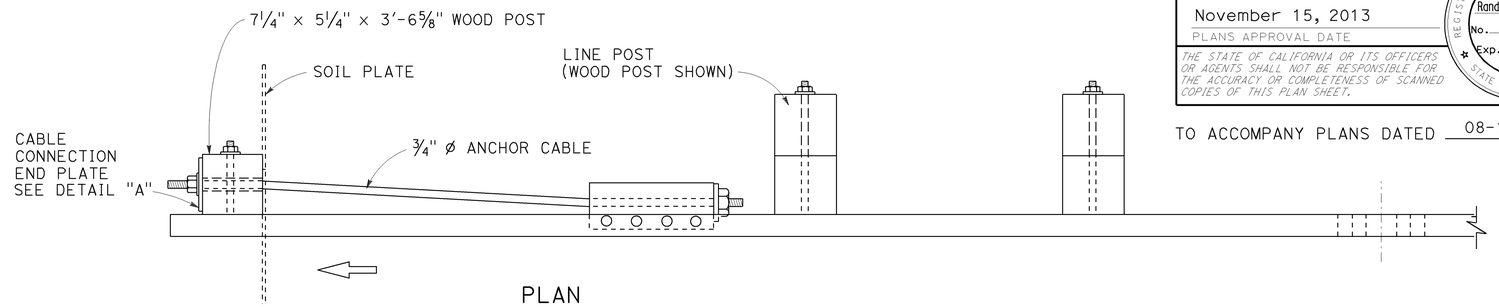

PLAN

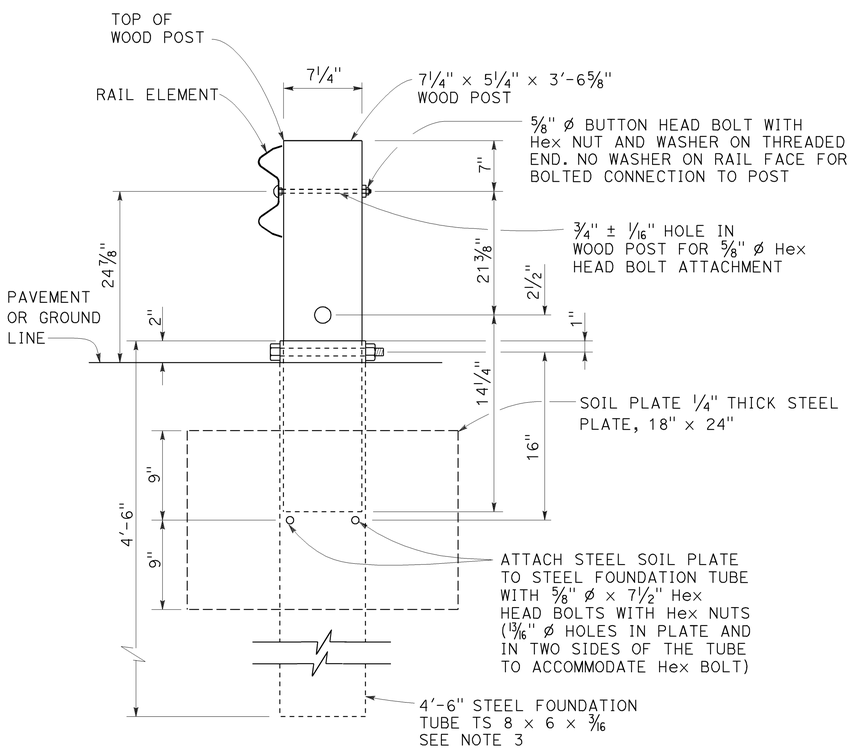

SECTION A-A

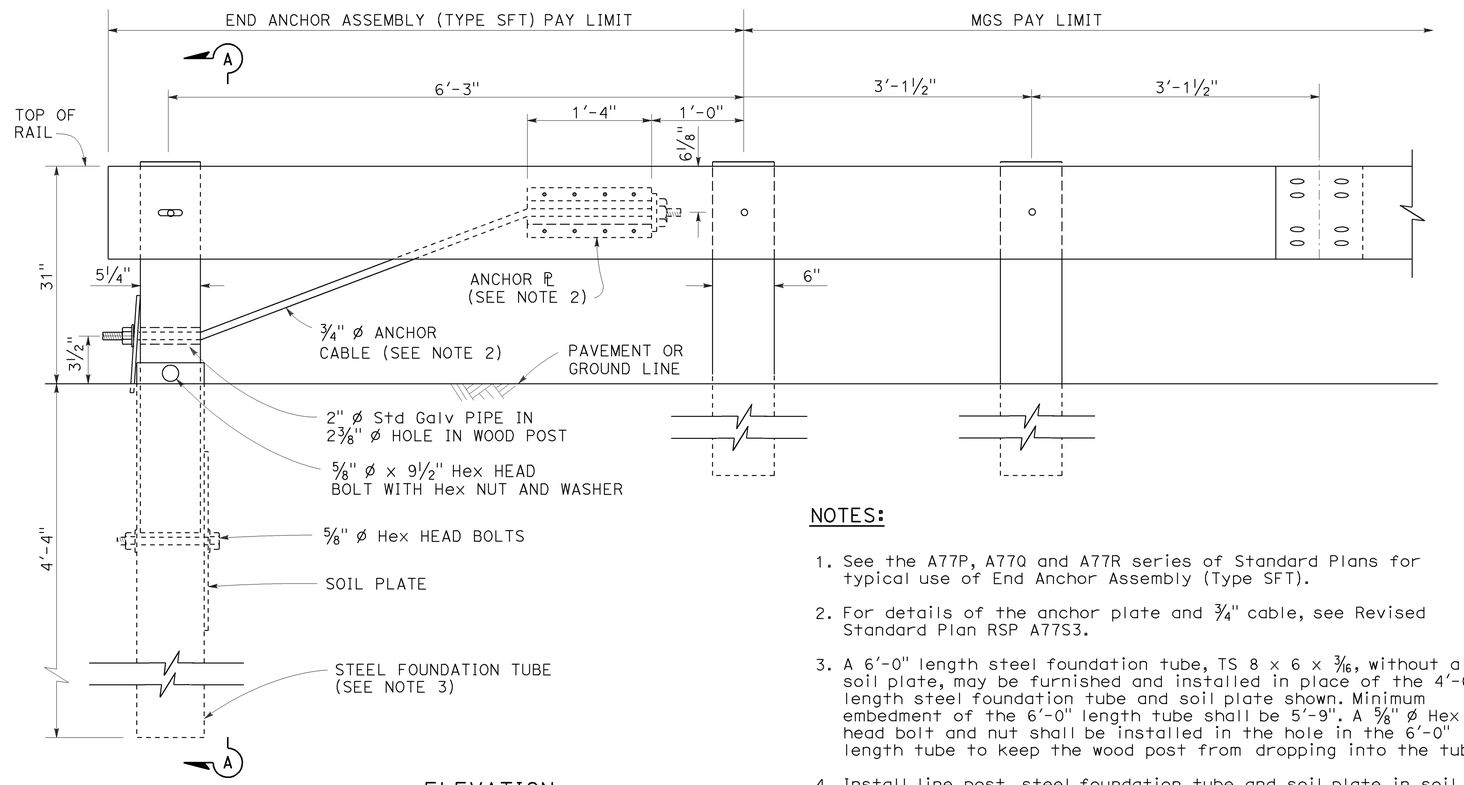

ELEVATION

END ANCHOR
ASSEMBLY (TYPE SFT)
See Note 1

NOTES:

1. See the A77P, A77Q and A77R series of Standard Plans for typical use of End Anchor Assembly (Type SFT).
2. For details of the anchor plate and 3/4" cable, see Revised Standard Plan RSP A77S3.
3. A 6'-0" length steel foundation tube, TS 8 x 6 x 3/16, without a soil plate, may be furnished and installed in place of the 4'-6" length steel foundation tube and soil plate shown. Minimum embedment of the 6'-0" length tube shall be 5'-9". A 5/8" ø Hex head bolt and nut shall be installed in the hole in the 6'-0" length tube to keep the wood post from dropping into the tube.
4. Install line post, steel foundation tube and soil plate in soil.

STATE OF CALIFORNIA
DEPARTMENT OF TRANSPORTATION

MIDWEST GUARDRAIL SYSTEM END ANCHOR ASSEMBLY (TYPE SFT)

NO SCALE

RSP A77S1 DATED NOVEMBER 15, 2013 SUPERSEDES RSP A77S1
DATED JULY 19, 2013 THAT SUPPLEMENTS THE STANDARD PLANS BOOK DATED 2010.

REVISED STANDARD PLAN RSP A77S1

2010 REVISED STANDARD PLAN RSP A77S1

10-4-13

Dist	COUNTY	ROUTE	POST MILES TOTAL PROJECT	SHEET No.	TOTAL SHEETS
11	SD	8	R25.9/R32.2	48	67

Randell D. Hiatt
REGISTERED CIVIL ENGINEER

November 15, 2013
PLANS APPROVAL DATE

REGISTERED PROFESSIONAL ENGINEER
Randell D. Hiatt
No. C50200
Exp. 6-30-15
CIVIL
STATE OF CALIFORNIA

THE STATE OF CALIFORNIA OR ITS OFFICERS OR AGENTS SHALL NOT BE RESPONSIBLE FOR THE ACCURACY OR COMPLETENESS OF SCANNED COPIES OF THIS PLAN SHEET.

TO ACCOMPANY PLANS DATED 08-11-14

NOTE:

See Revised Standard Plans RSP A77S1, RSP A77S2 and RSP A77T1 for typical use of anchor cable and anchor plate.

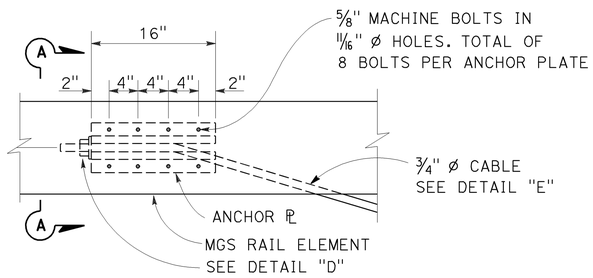

ANCHOR PLATE DETAIL

(MGS shown, TBB similar)

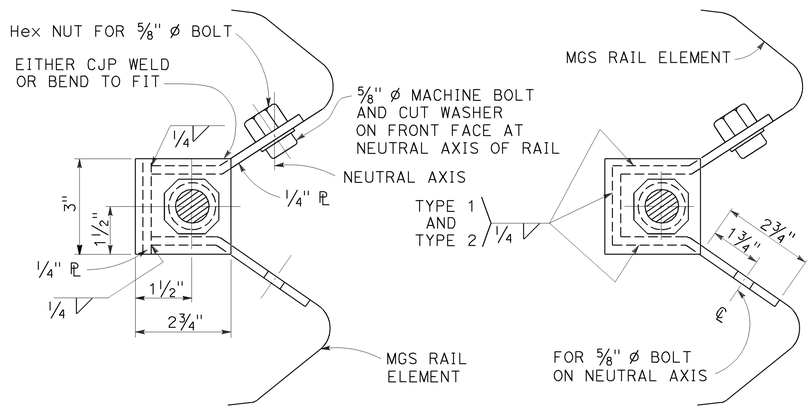

NOTE:

Dimensioning applies to both types.

SECTION A-A
(ALTERNATIVE TYPE 1)

SECTION A-A
(ALTERNATIVE TYPE 2)

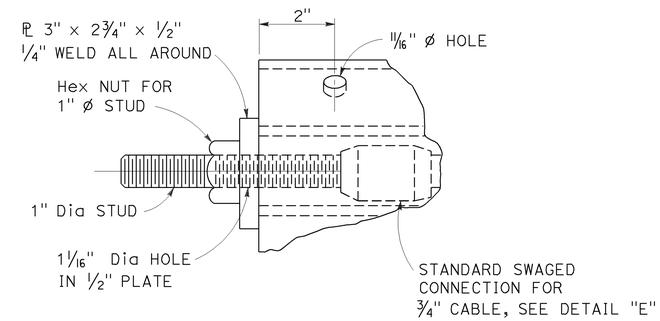

DETAIL "D"

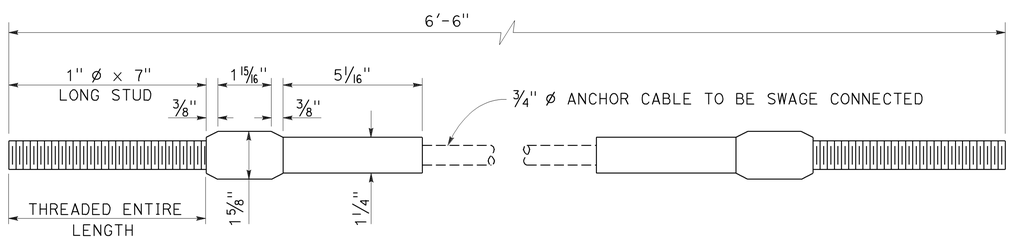

ANCHOR CABLE WITH SWAGED FITTING AND STUD

DETAIL "E"

STATE OF CALIFORNIA
DEPARTMENT OF TRANSPORTATION

METAL RAILING ANCHOR CABLE AND ANCHOR PLATE DETAILS

NO SCALE

RSP A77S3 DATED NOVEMBER 15, 2013 SUPERSEDES RSP A77S3
DATED JULY 19, 2013 THAT SUPPLEMENTS THE STANDARD PLANS BOOK DATED 2010.

REVISED STANDARD PLAN RSP A77S3

2010 REVISED STANDARD PLAN RSP A77S3

10-4-13

Dist	COUNTY	ROUTE	POST MILES TOTAL PROJECT	SHEET No.	TOTAL SHEETS
11	SD	8	R25.9/R32.2	49	67

Randell D. Hiatt
REGISTERED CIVIL ENGINEER

November 15, 2013
PLANS APPROVAL DATE

REGISTERED PROFESSIONAL ENGINEER
Randell D. Hiatt
No. C50200
Exp. 6-30-15
CIVIL
STATE OF CALIFORNIA

THE STATE OF CALIFORNIA OR ITS OFFICERS OR AGENTS SHALL NOT BE RESPONSIBLE FOR THE ACCURACY OR COMPLETENESS OF SCANNED COPIES OF THIS PLAN SHEET.

TO ACCOMPANY PLANS DATED 08-11-14

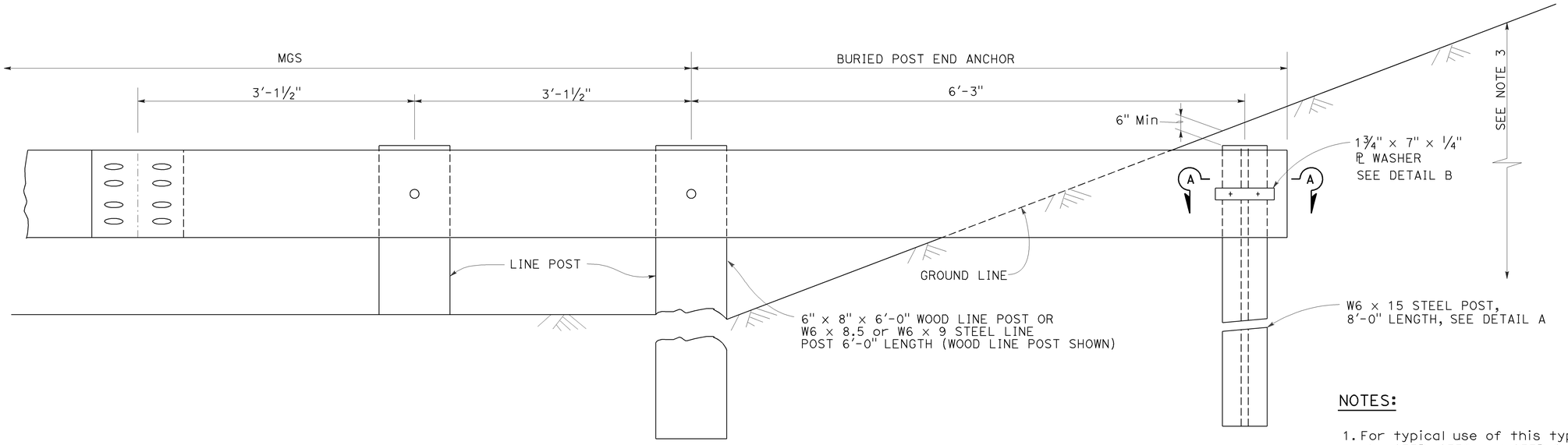

BURIED POST END ANCHOR

See Note 3

NOTES:

1. For typical use of this type of end anchor with MGS see the A77P, A77Q and A77R Series of the Standard Plans.
2. Holes excavation in the slope to construct the buried post end anchor shall be backfilled with selected earth, placed in layers approximately 1'-0" thick. Each layer shall be moistened and thoroughly compacted.
3. The buried post end anchor shall only be constructed at those locations where the slope perpendicular to the roadway is non-traversable.

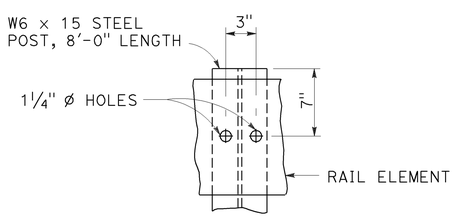

DETAIL A

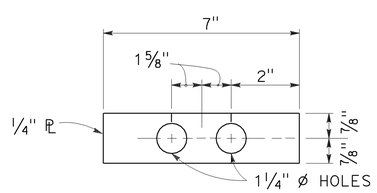

DETAIL B

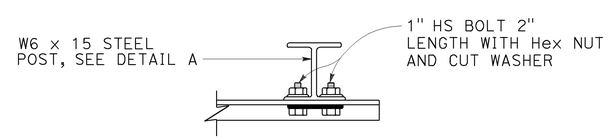

SECTION A-A

STATE OF CALIFORNIA
DEPARTMENT OF TRANSPORTATION

MIDWEST GUARDRAIL SYSTEM BURIED POST END ANCHOR

NO SCALE

RSP A77T2 DATED NOVEMBER 15, 2013 SUPERSEDES RSP A77T2
DATED JULY 19, 2013 THAT SUPPLEMENTS THE STANDARD PLANS BOOK DATED 2010.

REVISED STANDARD PLAN RSP A77T2

2010 REVISED STANDARD PLAN RSP A77T2

10-4-13

Dist	COUNTY	ROUTE	POST MILES TOTAL PROJECT	SHEET No.	TOTAL SHEETS
11	SD	8	R25.9/R32.2	50	67

Randell D. Hiatt
REGISTERED CIVIL ENGINEER

July 19, 2013
PLANS APPROVAL DATE

REGISTERED PROFESSIONAL ENGINEER
Randell D. Hiatt
No. C50200
Exp. 6-30-15
CIVIL
STATE OF CALIFORNIA

THE STATE OF CALIFORNIA OR ITS OFFICERS OR AGENTS SHALL NOT BE RESPONSIBLE FOR THE ACCURACY OR COMPLETENESS OF SCANNED COPIES OF THIS PLAN SHEET.

TO ACCOMPANY PLANS DATED 08-11-14

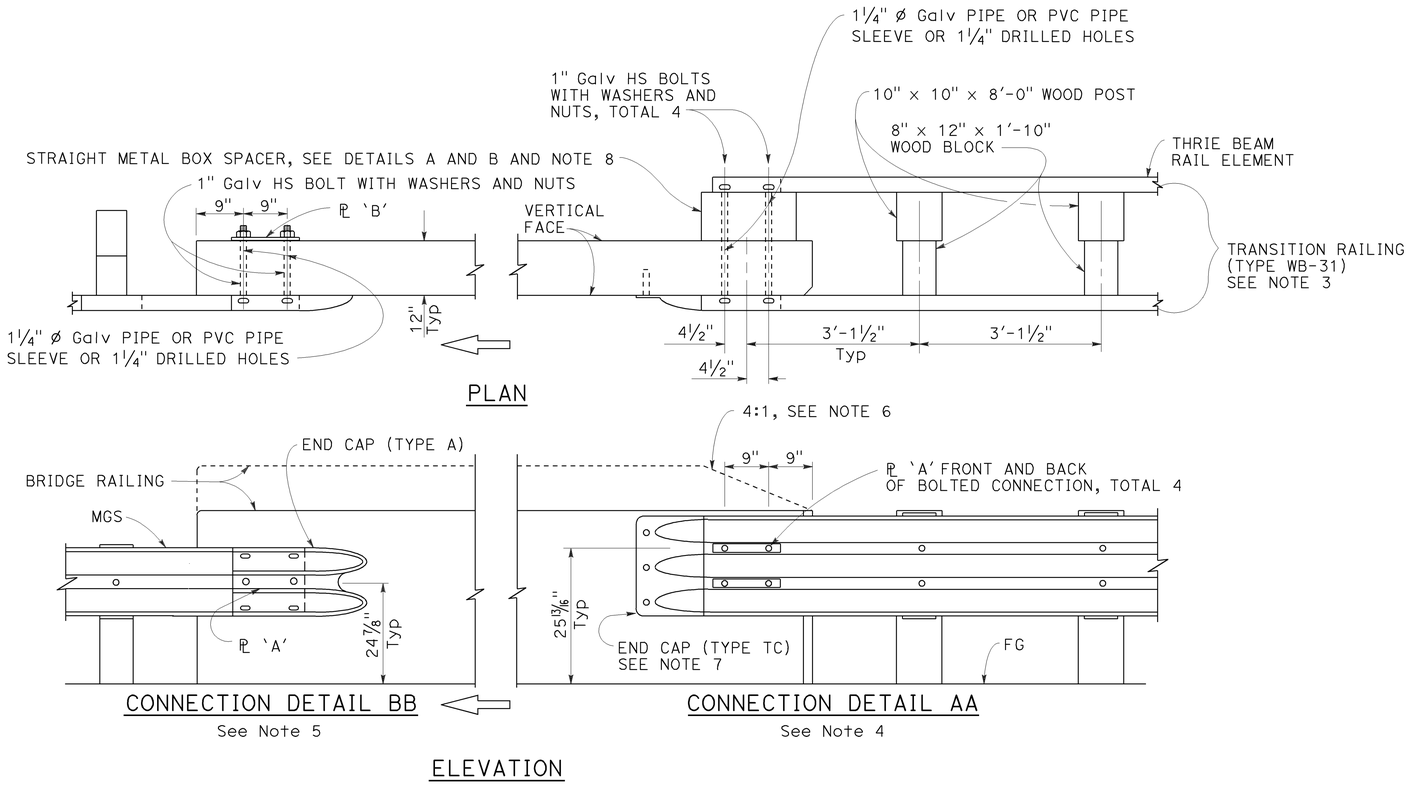

MIDWEST GUARDRAIL SYSTEM CONNECTION TO BRIDGE RAILING WITHOUT SIDEWALK

NOTES:

1. See Revised Standard Plan RSP A77U2 for additional connection details to bridges without sidewalks.
2. Additional details of posts, blocks and hardware are shown on Revised Standard Plans RSP A77M1, RSP A77N1 and RSP A77N2.
3. For additional details of Transition Railing (Type WB-31), see Revised Standard Plan RSP A77U4. Transition Railing (Type WB-31) transitions the 12 gauge MGS railing section to a heavier gage nested thrie beam railing section which is connected to the concrete bridge railing.
4. For typical use of Connection Detail AA, see Layout Types 12A and 12B on Revised Standard Plan RSP A77Q1, Layout Types 12C and 12D on Revised Standard Plan RSP A77Q2, and Layout Type 12E on Revised Standard Plan RSP A77Q3.
5. For typical use of Connection Detail BB, see Layout Type 12D (structure departure railing connection) on Revised Standard Plan RSP A77Q2 and Layout Type 12DD on Revised Standard Plan RSP A77Q5.
6. Where the height of the bridge railing exceeds the height of the thrie beam railing by more than 1" at Connection Detail AA, taper the top of the end of the bridge railing at 4:1 to match the top elevation of the thrie beam rail.
7. For details of End Cap (Type TC), see Revised Standard Plan RSP A77U4.
8. See Revised Standard Plan RSP A77U4 for additional details regarding depth dimension for straight metal box spacer.

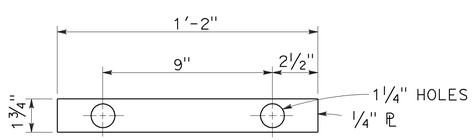

PLATE 'A'

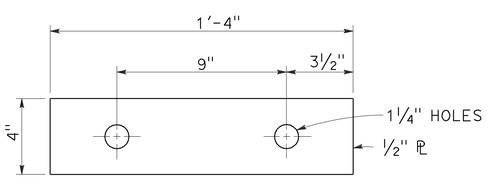

PLATE 'B'
(For backside of connection BB)

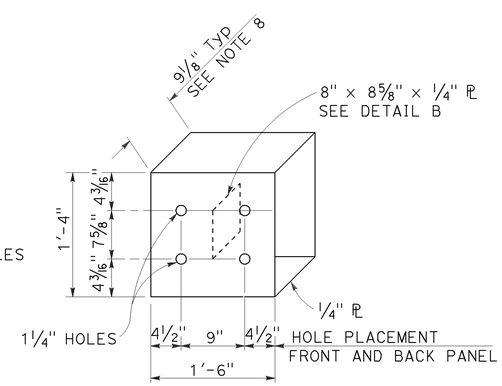

DETAIL A

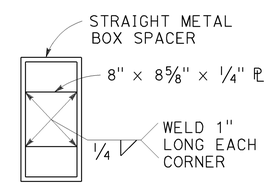

DETAIL B

STRAIGHT METAL BOX SPACER

STATE OF CALIFORNIA
DEPARTMENT OF TRANSPORTATION

MIDWEST GUARDRAIL SYSTEM CONNECTIONS TO BRIDGE RAILINGS WITHOUT SIDEWALKS DETAILS No. 1

NO SCALE

RSP A77U1 DATED JULY 19, 2013 SUPPLEMENTS THE STANDARD PLANS BOOK DATED 2010.

REVISED STANDARD PLAN RSP A77U1

2010 REVISED STANDARD PLAN RSP A77U1

7-8-13

Dist	COUNTY	ROUTE	POST MILES TOTAL PROJECT	SHEET No.	TOTAL SHEETS
11	SD	8	R25.9/R32.2	51	67

Randell D. Hiatt
REGISTERED CIVIL ENGINEER

July 19, 2013
PLANS APPROVAL DATE

REGISTERED PROFESSIONAL ENGINEER
Randell D. Hiatt
No. C50200
Exp. 6-30-15
CIVIL
STATE OF CALIFORNIA

THE STATE OF CALIFORNIA OR ITS OFFICERS OR AGENTS SHALL NOT BE RESPONSIBLE FOR THE ACCURACY OR COMPLETENESS OF SCANNED COPIES OF THIS PLAN SHEET.

TO ACCOMPANY PLANS DATED 08-11-14

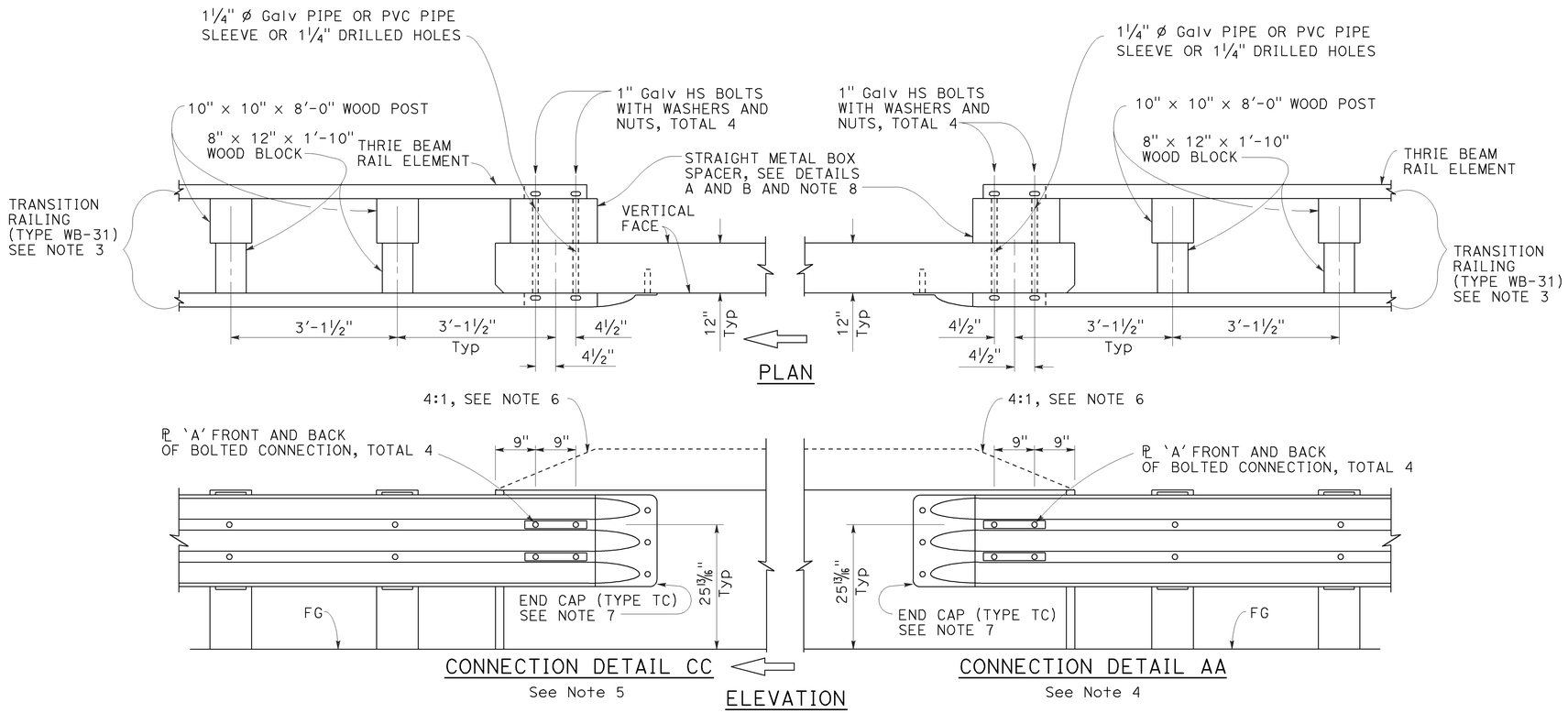

MIDWEST GUARDRAIL SYSTEM CONNECTION TO BRIDGE RAILING WITHOUT SIDEWALK

NOTES:

1. See Revised Standard Plan RSP A77U1 for additional connection details to bridges without sidewalks.
2. Additional details of posts, blocks and hardware are shown on Revised Standard Plans RSP A77M1, RSP A77N1 and RSP A77N2.
3. For additional details of Transition Railing (Type WB-31), see Revised Standard Plan RSP A77U4. Transition Railing (Type WB-31) transitions the 12 gauge MGS railing section to a heavier gage nested thrie beam railing section which is connected to the concrete bridge railing.
4. For typical use of Connection Detail AA, see Layout Types 12A and 12B on Revised Standard Plan RSP A77Q1, Layout Types 12C and 12D on Revised Standard Plan RSP A77Q2, and Layout Type 12E on Revised Standard Plan RSP A77Q3.
5. For typical use of Connection Detail CC, see Layout Types 12AA and 12BB on Revised Standard Plan RSP A77Q4 and Layout Type 12CC on Revised Standard Plan RSP A77Q5.
6. Where the height of the bridge railing exceeds the height of the thrie beam railing by more than 1" at Connection Detail AA and connection Detail CC, taper the top of the end of the bridge railing at 4:1 to match the top elevation of the thrie beam railing.
7. For details of End Cap (Type TC), see Revised Standard Plan RSP A77U4.
8. See Revised Standard Plan RSP A77U4 for additional details regarding depth dimension for straight metal box spacer.

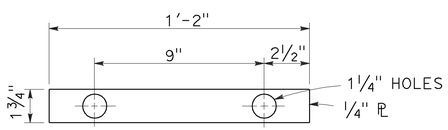

PLATE 'A'

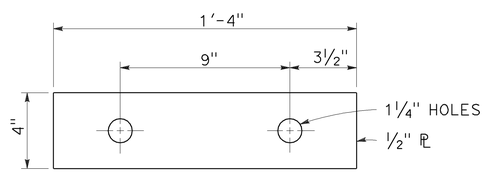

PLATE 'B'
(For backside of connection BB)

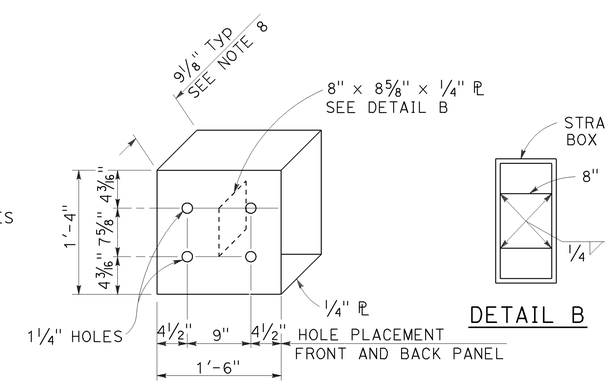

DETAIL A

STRAIGHT METAL BOX SPACER

STATE OF CALIFORNIA
DEPARTMENT OF TRANSPORTATION

MIDWEST GUARDRAIL SYSTEM CONNECTIONS TO BRIDGE RAILINGS WITHOUT SIDEWALKS DETAILS No. 2

NO SCALE

RSP A77U2 DATED JULY 19, 2013 SUPPLEMENTS THE STANDARD PLANS BOOK DATED 2010.

REVISED STANDARD PLAN RSP A77U2

2010 REVISED STANDARD PLAN RSP A77U2

6-20-13

Dist	COUNTY	ROUTE	POST MILES TOTAL PROJECT	SHEET No.	TOTAL SHEETS
11	SD	8	R25.9/R32.2	52	67

Randell D. Hiatt
REGISTERED CIVIL ENGINEER

November 15, 2013
PLANS APPROVAL DATE

REGISTERED PROFESSIONAL ENGINEER
Randell D. Hiatt
No. C50200
Exp. 6-30-15
CIVIL
STATE OF CALIFORNIA

THE STATE OF CALIFORNIA OR ITS OFFICERS OR AGENTS SHALL NOT BE RESPONSIBLE FOR THE ACCURACY OR COMPLETENESS OF SCANNED COPIES OF THIS PLAN SHEET.

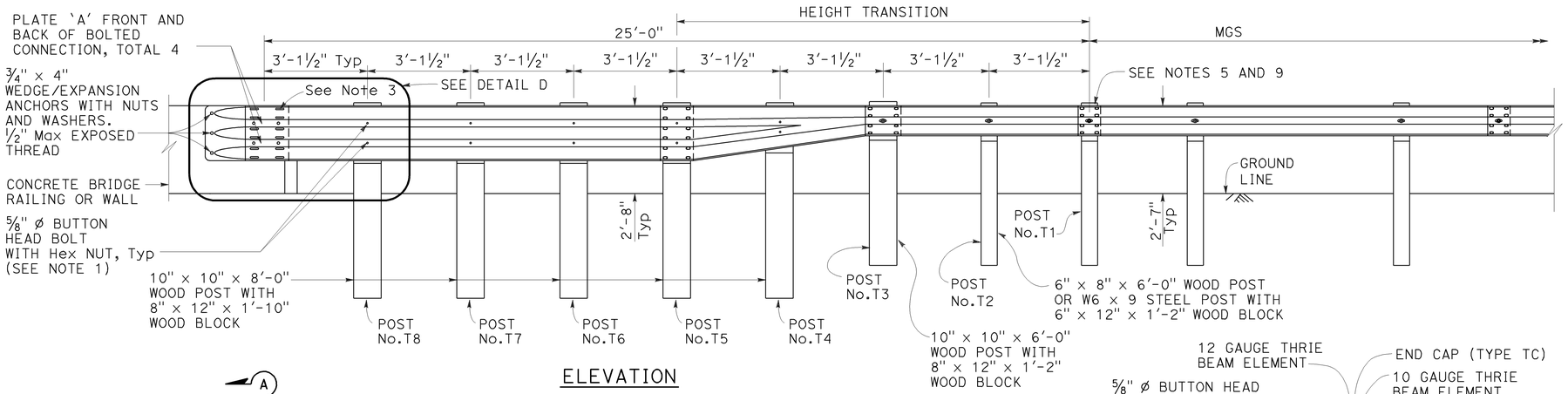

ELEVATION

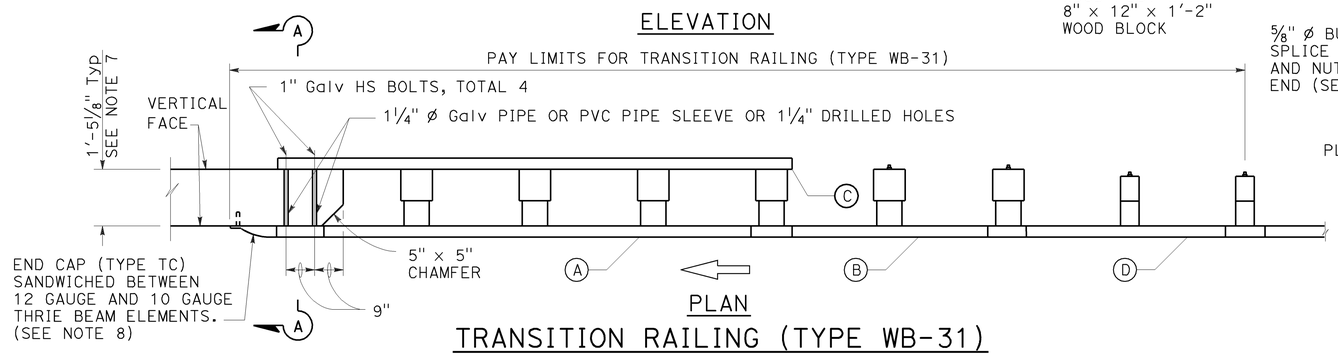

PLAN

TRANSITION RAILING (TYPE WB-31)

(No Blockout Attachment)

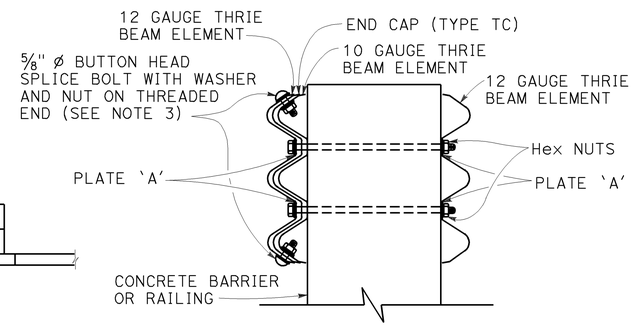

SECTION A-A

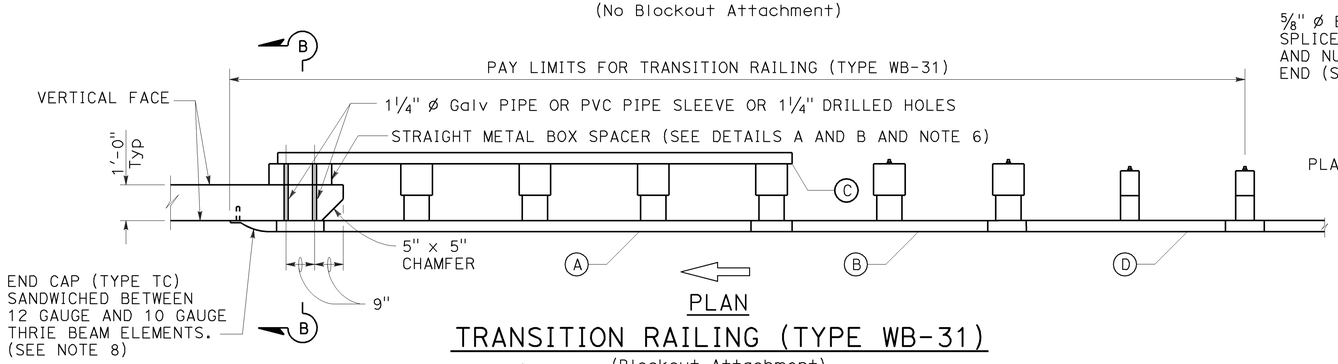

PLAN

TRANSITION RAILING (TYPE WB-31)

(Blockout Attachment)

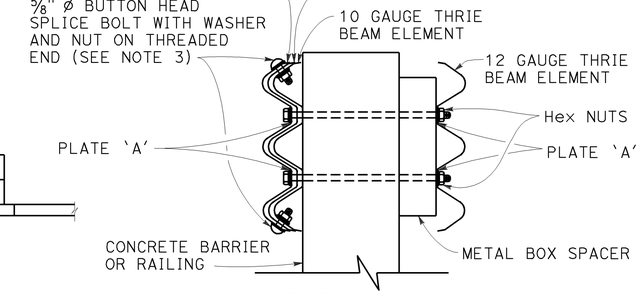

SECTION B-B

LEGEND:

(A) NESTED THRIE BEAM ELEMENTS (ONE 12 GAUGE ELEMENT NESTED OVER ONE 10 GAUGE ELEMENT).

(B) ONE ASYMMETRICAL 10 GAUGE "W" BEAM TO THRIE BEAM ELEMENT.

(C) ONE 12 GAUGE THRIE BEAM ELEMENT.

(D) ONE 10 GAUGE "W" BEAM RAIL ELEMENT (7'-3 1/2"LENGTH)

10 GAUGE = 0.138" THICK
12 GAUGE = 0.108" THICK

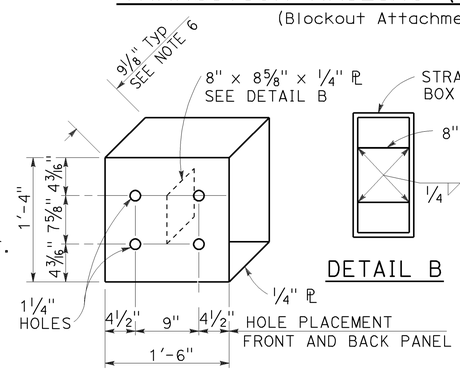

DETAIL A

STRAIGHT METAL BOX SPACER

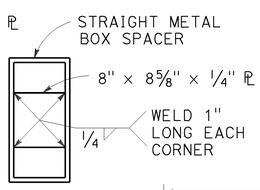

DETAIL B

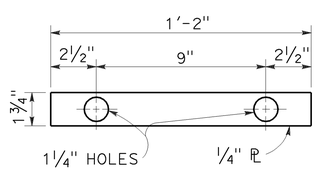

DETAIL C

PLATE 'A'

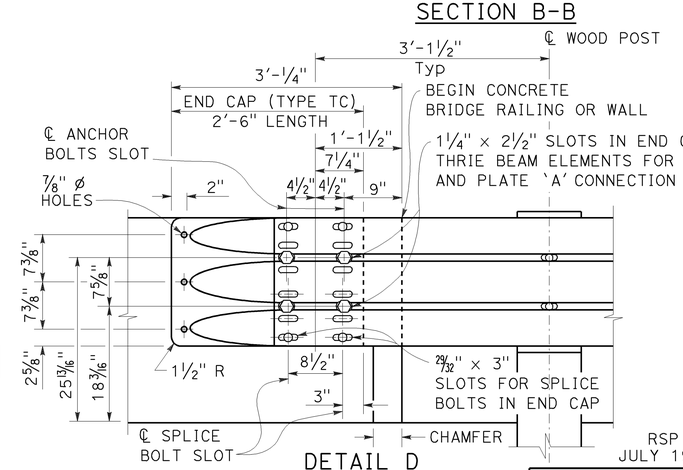

DETAIL D

NOTES:

TO ACCOMPANY PLANS DATED 08-11-14

1. Use 5/8" ø Button head bolts and hex nuts for connections to posts. No washer on rail face for bolted connections to post.

2. The nested rail elements, end cap, and 'W' beam to thrie beam element may be spliced together prior to bolting the elements to the wood post and concrete barrier or railing.

3. Exterior splice bolt holes for rail element splices at Post No. T5 and the connection to the concrete barrier or railing shall be the standard 29/32" x 1 1/8" slot size. Interior splice bolt holes at these locations may be increased up to 1 1/4" ø. Only the top 4 and the bottom 4 splice bolts with washers and nuts are required for rail splices at Post No. T5 and the connection to the concrete barrier or railing.

4. The top elevation of Posts No. T2 through No. T7 shall not project more than 1" above the top elevation of the rail element.

5. Typically, the railing connected to Transition Railing (Type WB-31) will be either standard railing section of MGS with height transition ratio of 150:1 or a Caltrans approved 31" end treatment attached to Post No. T1.

6. The depth of the metal box spacer varies from the 9 1/8" to 1 1/2" and is dependent on the width of the concrete railing or wall. The combined dimension for the depth of the metal box spacer plus the width of railing or wall is typically 21 1/8". Where the space between the backside of the concrete railing or wall and the rear thrie beam element is less than 1 1/2", metal plates similar to Plate 'A' are to be used as spacers.

7. Where the width of the concrete railing or wall is greater than 17 1/8", wood blocks are to be used to fill the space created between the backside of Posts No. T5 through No. T8 and the rear thrie beam element. These wood blocks shall be 8" in width and 1'-2" in length. The dimension between the front thrie beam element and the rear thrie beam element is to match the width of the concrete railing or wall.

8. End cap may be installed over 12 gauge and 10 gauge thrie beam elements where transition railing is installed on the departure end of bridge railing.

9. Conform standard railing section height to 31" at Post No. T1 using height transition ratio of 150:1.

STATE OF CALIFORNIA
DEPARTMENT OF TRANSPORTATION

MIDWEST GUARDRAIL SYSTEM TRANSITION RAILING (TYPE WB-31)

NO SCALE

RSP A77U4 DATED NOVEMBER 15, 2013 SUPERSEDES RSP A77U4 DATED JULY 19, 2013 THAT SUPPLEMENTS THE STANDARD PLANS BOOK DATED 2010.

REVISED STANDARD PLAN RSP A77U4

2010 REVISED STANDARD PLAN RSP A77U4

10-4-13

Dist	COUNTY	ROUTE	POST MILES TOTAL PROJECT	SHEET No.	TOTAL SHEETS
11	SD	8	R25.9/R32.2	53	67

REGISTERED CIVIL ENGINEER

July 19, 2013
PLANS APPROVAL DATE

REGISTERED PROFESSIONAL ENGINEER
Michael Janzen
No. 44788
Exp. 03-31-14
CIVIL
STATE OF CALIFORNIA

THE STATE OF CALIFORNIA OR ITS OFFICERS OR AGENTS SHALL NOT BE RESPONSIBLE FOR THE ACCURACY OR COMPLETENESS OF SCANNED COPIES OF THIS PLAN SHEET.

TO ACCOMPANY PLANS DATED 08-11-14

2010 REVISED STANDARD PLAN RSP A87B

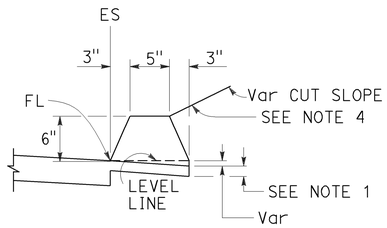

TYPE A
See Note 3

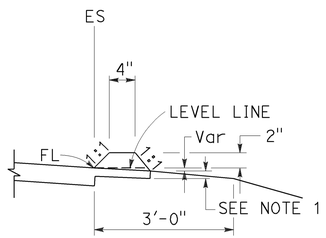

TYPE C

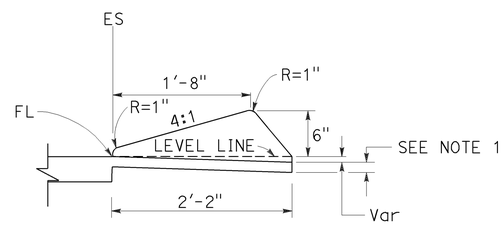

TYPE D

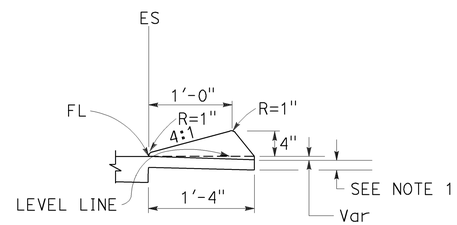

TYPE E

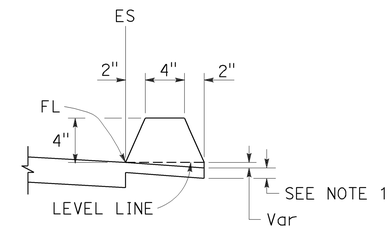

TYPE F
See Note 5

DIKES

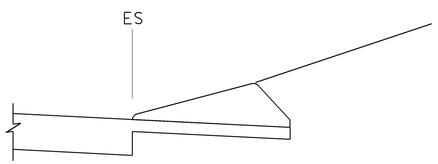

CASE C-1
Cut Slope

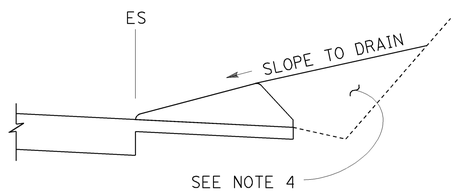

CASE C-2
Cut Slope

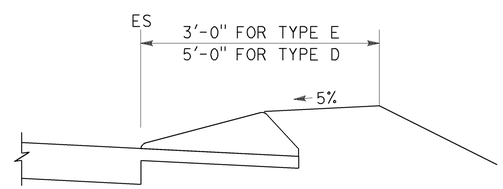

CASE F

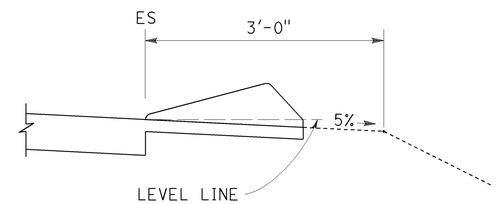

CASE R
See Note 2

TYPE D AND E BACKFILL DETAILS

NOTES:

1. For HMA shoulders only, extend top layer of HMA placed on the shoulder under dike with no joint at the ES. For projects with OGFC shoulders, do not extend OGFC under dike. See project plans for modified dike detail.
2. Case R applies to retrofit only projects where restrictive conditions do not provide enough width for Case F backfill.
3. Type A dike only to be used where restrictive slope conditions do not provide enough width to use Type D or Type E dike.
4. Fill and compact with excavated material to top of dike.
5. Use Type F dike, where dike is required with guard railing installations. See Revised Standard Plan RSP A77N4 for dike positioning details.

DIKE QUANTITIES

TYPE	CUBIC YARDS PER LINEAR FOOT
A	0.0135
C	0.0038
D	0.0293
E	0.0130
F	0.0066

Quantities based on 5% cross slope.

STATE OF CALIFORNIA
DEPARTMENT OF TRANSPORTATION

HOT MIX ASPHALT DIKES

NO SCALE

RSP A87B DATED JULY 19, 2013 SUPERSEDES STANDARD PLAN A87B DATED MAY 20, 2011 - PAGE 120 OF THE STANDARD PLANS BOOK DATED 2010.

REVISED STANDARD PLAN RSP A87B

Dist	COUNTY	ROUTE	POST MILES TOTAL PROJECT	SHEET No.	TOTAL SHEETS
11	SD	8	R25.9/R32.2	54	67

Raymond Don Tsztoo
REGISTERED CIVIL ENGINEER

April 19, 2013
PLANS APPROVAL DATE

REGISTERED PROFESSIONAL ENGINEER Raymond Don Tsztoo No. C37332 Exp. 6-30-14 CIVIL STATE OF CALIFORNIA

THE STATE OF CALIFORNIA OR ITS OFFICERS OR AGENTS SHALL NOT BE RESPONSIBLE FOR THE ACCURACY OR COMPLETENESS OF SCANNED COPIES OF THIS PLAN SHEET.

TO ACCOMPANY PLANS DATED 08-11-14

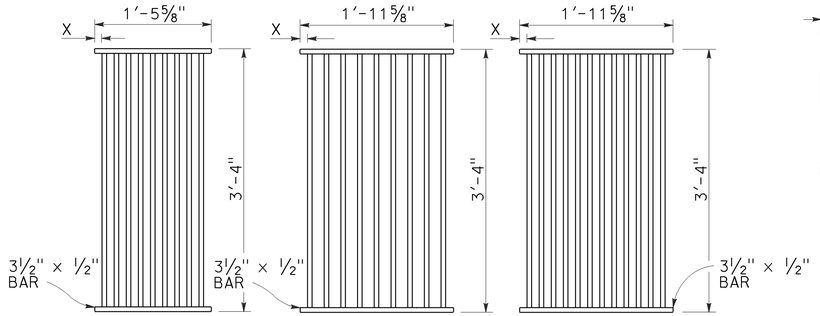

TYPE 18-9

1⅜" Clear spacing. Use within the roadbed on highways where bicycles and pedestrians are excluded.

TYPE 24-9

2" Clear spacing. Use in locations off the roadbed on all types of highways.

TYPE 24-12

1⅜" Clear spacing. Use within the roadbed on highways where bicycles and pedestrians are excluded.

RECTANGULAR GRATE DETAILS

(See table below)

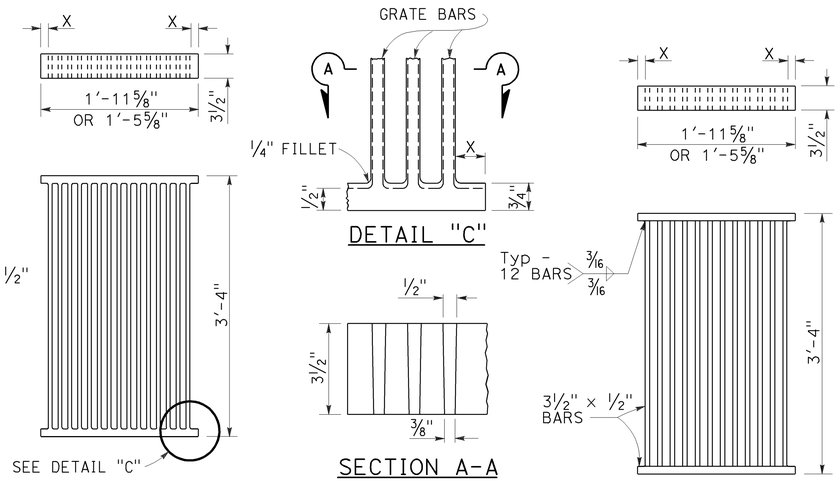

ALTERNATIVE CAST DUCTILE IRON GRATE OR CAST CARBON STEEL GRATE

ALTERNATIVE WELDED GRATE

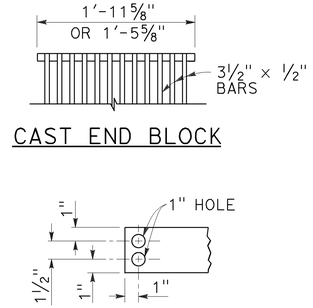

CAST END BLOCK

END OF BAR

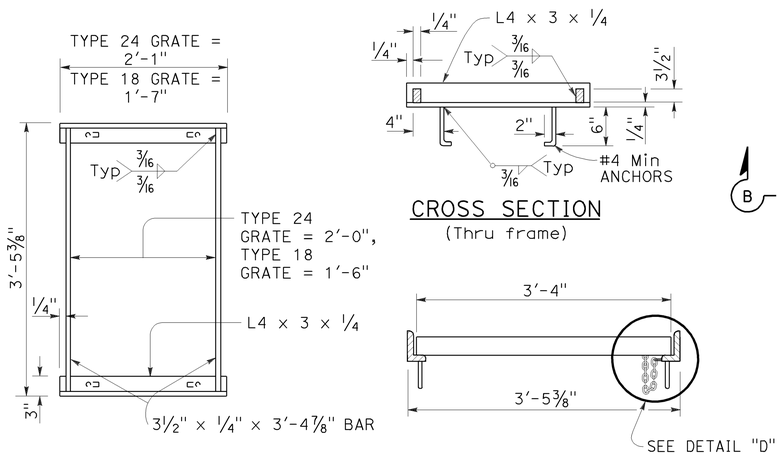

TYPICAL FRAME

CROSS SECTION
(Thru frame)

LONGITUDINAL SECTION
(Thru frame and grate)

RECTANGULAR FRAME DETAILS

(For all rectangular grates)

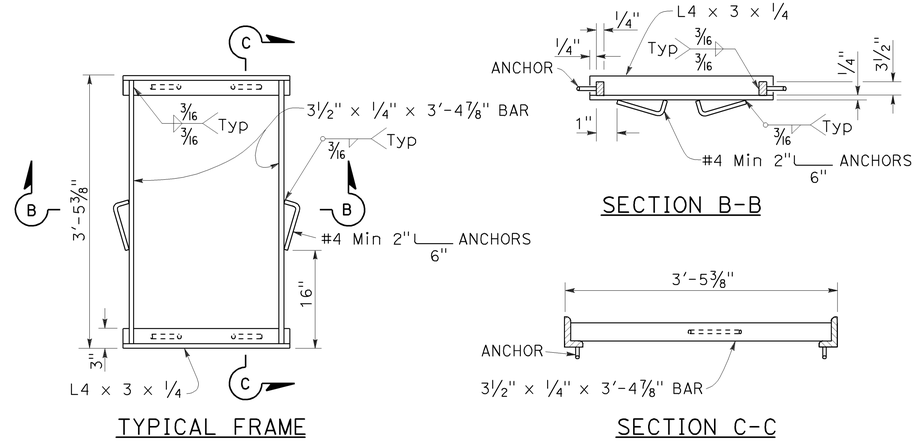

TYPICAL FRAME

SECTION B-B

SECTION C-C

ALTERNATIVE ANCHOR FOR RECTANGULAR FRAME

(For details not shown, See Rectangular Frame Details)

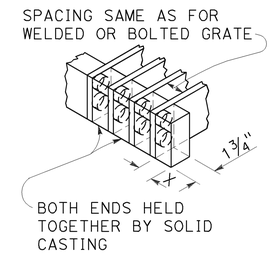

ALTERNATIVE CAST DUCTILE IRON OR CAST CARBON STEEL END BLOCK GRATE

NOTES:

1. Grate type numbers refer to approximate width of grate in inches and number of bars, respectively.
2. Contractor has the option of using cast ductile iron, cast carbon steel, welded, bolted, or cast end block grate.
3. Rounded top of bars optional on all grates.
4. Pipe inlets with a grate shall be placed so that bars parallel direction of principle surface flow.
5. Complete joint penetration butt welds may be substituted for the fillet welds on all anchors.
6. Standard square, hexagon, round or equivalent headed anchors may be substituted for the right angle hooks on the anchors shown on this plan.
7. Grate and frame weights are based on welded grates (weights of face angles, steps, protection bars, etc. are not included).
8. Connect chain to grate and frame only at locations shown on the plans. When chain is required, do not use cast ductile iron grates.

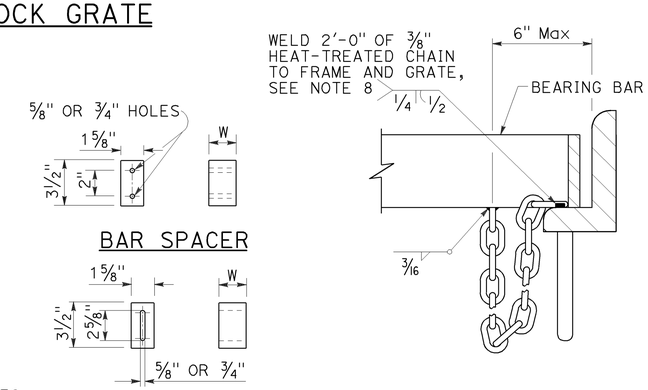

BAR SPACER

ALTERNATIVE SPACER
W = 1⅜" or 2"

DETAIL "D"
(Steel grates only)

GRATE BAR SPACING TABLE

TYPE	No. OF BARS	CLEAR BAR SPACING	X
18-9	9	1⅜"	1 1/16"
24-9	9	2"	1 9/16"
24-12	12	1⅜"	1¼"

INLET TYPE	COVER TYPE	WEIGHT LB
OS	PLATE	174
OL-7	PLATE	170
OL-10	PLATE	170
OL-14	PLATE	170
OL-21	PLATE	170
OCP	PLATE	112
OCPI	PLATE	112
OCPI	REDWOOD	42
OMP	PLATE	177
OMPI	PLATE	177

INLET TYPE	GRATE TYPE	No. OF GRATES	WEIGHT LB
GDO	24-12	2	634
GOL-7	24-12	1	326
GOL-10	24-12	1	326
GO,G1,G2,G3,G4 (TYPE 24)	24-9	1	263
	24-12	1	326
G4 (TYPE 18),G5,G6	18-9	1	249
GT1	18-9	2	498
GT2	18-9	2	498
GT3	24-12	2	652
GT4	24-12	2	652
TRASH RACK			22
GRATE CHAIN			3

BASIS FOR Misc IRON & STEEL FINAL PAY WEIGHTS FOR DRAINAGE INLETS

(See Note 7)

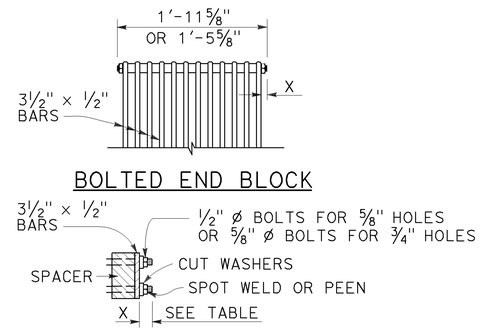

BOLTED END BLOCK

BOLTING DETAIL

ALTERNATIVE BOLTED GRATE

STATE OF CALIFORNIA
DEPARTMENT OF TRANSPORTATION

GRATE DETAILS No. 1

NO SCALE

RSP D77A DATED APRIL 19, 2013 SUPERSEDES RSP D77A DATED JULY 20, 2012 AND STANDARD PLAN D77A DATED MAY 20, 2011 - PAGE 164 OF THE STANDARD PLANS BOOK DATED 2010.

REVISED STANDARD PLAN RSP D77A

2010 REVISED STANDARD PLAN RSP D77A

4-4-13

Dist	COUNTY	ROUTE	POST MILES TOTAL PROJECT	SHEET No.	TOTAL SHEETS
11	SD	8	R25.9/R32.2	55	67

REGISTERED CIVIL ENGINEER

July 19, 2013
PLANS APPROVAL DATE

REGISTERED PROFESSIONAL ENGINEER
Gurinderpal Bhullar
No. C48815
Exp. 9-30-14
CIVIL
STATE OF CALIFORNIA

THE STATE OF CALIFORNIA OR ITS OFFICERS OR AGENTS SHALL NOT BE RESPONSIBLE FOR THE ACCURACY OR COMPLETENESS OF SCANNED COPIES OF THIS PLAN SHEET.

TO ACCOMPANY PLANS DATED 08-11-14

2010 REVISED STANDARD PLAN RSP T9

TABLE 1

TAPER LENGTH CRITERIA AND CHANNELIZING DEVICE SPACING

SPEED (S)	MINIMUM TAPER LENGTH * FOR WIDTH OF OFFSET 12 FEET (W)				MAXIMUM CHANNELIZING DEVICE SPACING		
					X	Y	Z **
	TANGENT 2L	MERGING L	SHIFTING L/2	SHOULDER L/3	TAPER	TANGENT	CONFLICT
mph	ft	ft	ft	ft	ft	ft	ft
20	160	80	40	27	20	40	10
25	250	125	63	42	25	50	12
30	360	180	90	60	30	60	15
35	490	245	123	82	35	70	17
40	640	320	160	107	40	80	20
45	1080	540	270	180	45	90	22
50	1200	600	300	200	50	100	25
55	1320	660	330	220	55	110	27
60	1440	720	360	240	60	120	30
65	1560	780	390	260	65	130	32
70	1680	840	420	280	70	140	35

* - For other offsets, use the following merging taper length formula for L:
For speed of 40 mph or less, $L = WS^2/60$
For speed of 45 mph or more, $L = WS$

Where: L = Taper length in feet
W = Width of offset in feet
S = Posted speed limit, off-peak 85th-percentile speed prior to work starting, or the anticipated operating speed in mph

** - Use for taper and tangent sections where there are no pavement markings or where there is a conflict between existing pavement markings and channelizers (CA).

TABLE 2

LONGITUDINAL BUFFER SPACE AND FLAGGER STATION SPACING

SPEED *	Min D **	DOWNGRADE Min D ***		
		-3%	-6%	-9%
mph	ft	ft	ft	ft
20	115	116	120	126
25	155	158	165	173
30	200	205	215	227
35	250	257	271	287
40	305	315	333	354
45	360	378	400	427
50	425	446	474	507
55	495	520	553	593
60	570	598	638	686
65	645	682	728	785
70	730	771	825	891

* - Speed is posted speed limit, off-peak 85th-percentile speed prior to work starting, or the anticipated operating speed in mph

** - Longitudinal buffer space or flagger station spacing

*** - Use on sustained downgrade steeper than -3 percent and longer than 1 mile.

TABLE 3

ADVANCE WARNING SIGN SPACING

ROAD TYPE	DISTANCE BETWEEN SIGNS *		
	A	B	C
	ft	ft	ft
URBAN - 25 mph OR LESS	100	100	100
URBAN - MORE THAN 25 mph TO 40 mph	250	250	250
URBAN - MORE THAN 40 mph	350	350	350
RURAL	500	500	500
EXPRESSWAY / FREEWAY	1000	1500	2640

* - The distances are approximate, are intended for guidance purposes only, and should be applied with engineering judgment. These distances should be adjusted by the Engineer for field conditions, if necessary, by increasing or decreasing the recommmended distances.

STATE OF CALIFORNIA
DEPARTMENT OF TRANSPORTATION

TRAFFIC CONTROL SYSTEM TABLES FOR LANE AND RAMP CLOSURES

NO SCALE

RSP T9 DATED JULY 19, 2013 SUPERSEDES RSP T9 DATED APRIL 19, 2013 THAT SUPPLEMENTS THE STANDARD PLANS BOOK DATED 2010.

REVISED STANDARD PLAN RSP T9

Dist	COUNTY	ROUTE	POST MILES TOTAL PROJECT	SHEET No.	TOTAL SHEETS
11	SD	8	R25.9/R32.2	56	67

REGISTERED CIVIL ENGINEER

April 19, 2013
PLANS APPROVAL DATE

REGISTERED PROFESSIONAL ENGINEER Gurinderpal Bhullar No. C48815 Exp. 9-30-14 CIVIL STATE OF CALIFORNIA

THE STATE OF CALIFORNIA OR ITS OFFICERS OR AGENTS SHALL NOT BE RESPONSIBLE FOR THE ACCURACY OR COMPLETENESS OF SCANNED COPIES OF THIS PLAN SHEET.

TO ACCOMPANY PLANS DATED 08-11-14

NOTES:

See Revised Standard Plan RSP T9 for tables.

Use cone spacing X for taper segment, Y for tangent segment or Z for conflict situations, as approriate, per Table 1, unless X, Y, or Z cone spacing is shown on this sheet.

Unless otherwise specified in the special provisions, all temporary warning signs shall have black legend on fluorescent orange background.

California codes are designated by (CA). Otherwise, Federal (MUTCD) codes are shown.

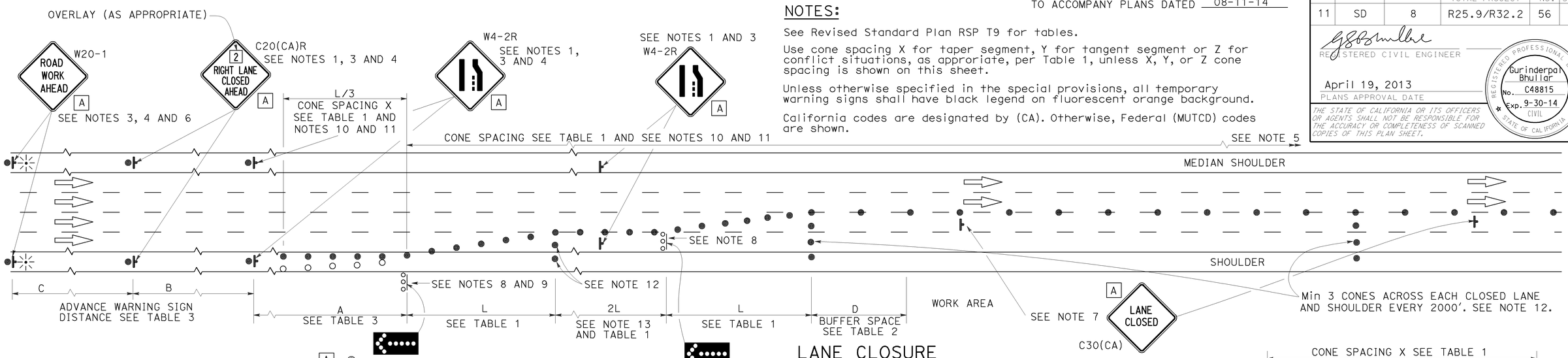

LANE CLOSURE

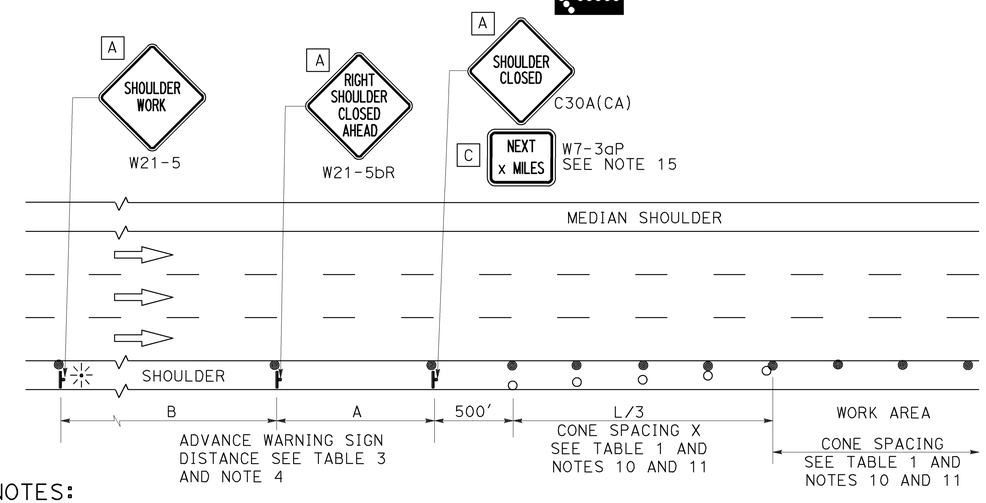

SHOULDER CLOSURE

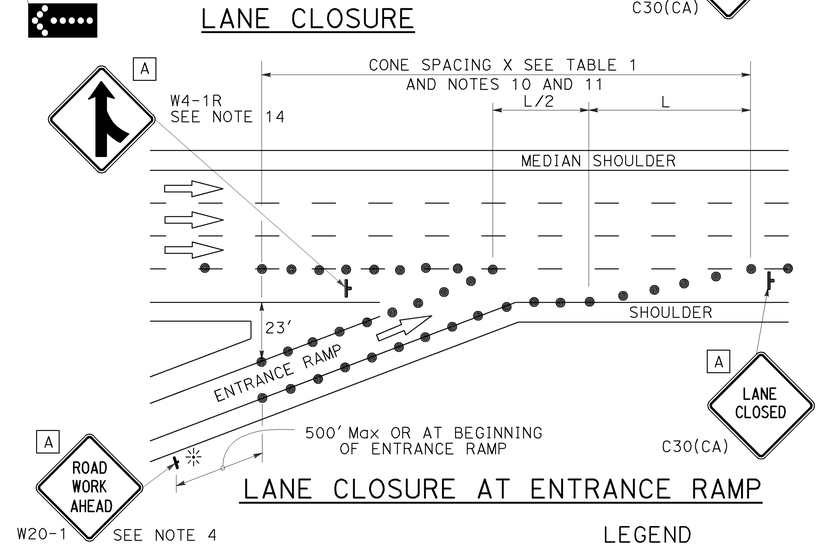

LANE CLOSURE AT ENTRANCE RAMP

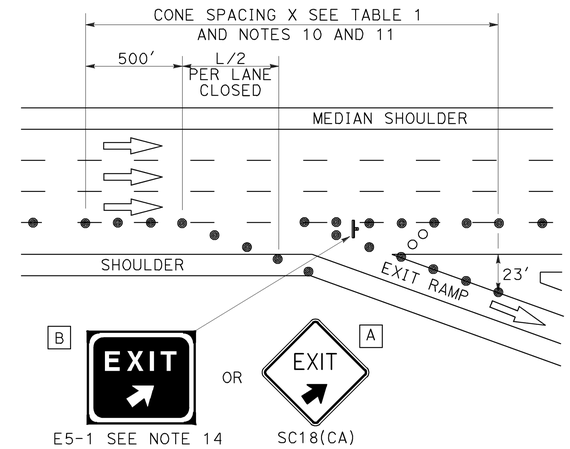

LANE CLOSURE AT EXIT RAMP

NOTES:

1. Median lane closures shall conform to the details as shown except that C20(CA)L and W4-2L signs shall be used.
2. At least one person shall be assigned to provide full time maintenance of traffic control devices for lane closures.
3. Duplicate sign installations are not required:
   a) On opposite shoulder if at least one-half of the available lanes remain open to traffic.
   b) In the median if the width of the median shoulder is less than 8' and the outside lanes are to be closed.
4. Each advance warning sign on each side of the roadway shall be equipped with at least two flags for daytime closure. Each flag shall be at least 16" x 16" in size and shall be orange or fluorescent red-orange in color. Flashing beacons shall be placed at the locations indicated for lane closure during hours of darkness.
5. A G20-2 "END ROAD WORK" sign, with minimum size of 48" x 24" as appropriate, shall be placed at the end of the lane closure unless the end of work area is obvious or ends within a larger project's limits.
6. If the W20-1 sign would follow within 2000' of a stationary W20-1 or G20-1 "ROAD WORK NEXT _____ MILES", use a C20(CA) sign for the first advance warning sign.
7. Place a C30(CA) sign every 2000' throughout length of lane closure.
8. One flashing arrow sign for each lane closed. The flashing arrow signs shall be Type I.
9. A minimum 1500' of sight distance shall be provided where possible for vehicles approaching the first flashing arrow sign. Lane closures shall not begin at top of crest vertical curve or on a horizontal curve.
10. All cones used for lane closures during the hours of darkness shall be fitted with retroreflective bands (or sleeves) as specified in the specifications.
11. Portable delineators, placed at one-half the spacing indicated for traffic cones may be used instead of cones for daytime closures only.
12. Unless otherwise specified in the special provisions, a minimum of 3 cones shall be placed transversely across each closed lane and shoulder at each location where a taper across a traffic lane ends and every 2000' as shown on the "Lane Closure" detail. Two Type II barricades may be used instead of the 3 cones. The transverse alignment of the cones or barricades on the closed shoulder may be shifted from the transverse alignment to provide access to the work.
13. Unless otherwise specified in the special provisions, the 2L tangent shown along lane lines shall be used between the L tapers required for each closed traffic lane.
14. Unless otherwise specified in the special provisions, the E5-1 or SC18(CA) and W4-1 signs shall be used as shown.
15. A W7-3aP "NEXT____ MILES" plaque must be used if theshoulder closure extends beyond the distance that can be perceived by road users.

LEGEND

- TRAFFIC CONE
- TRAFFIC CONE (OPTIONAL TAPER)
- TEMPORARY TRAFFIC CONTROL SIGN
- FLASHING ARROW SIGN (FAS)
- FAS SUPPORT OR TRAILER
- PORTABLE FLASHING BEACON

SIGN PANEL SIZE (Min)

A	48" x 48"
B	72" x 60"
C	36" x 30"

STATE OF CALIFORNIA
DEPARTMENT OF TRANSPORTATION

TRAFFIC CONTROL SYSTEM FOR LANE CLOSURE ON FREEWAYS AND EXPRESSWAYS

NO SCALE

RSP T10 DATED APRIL 19, 2013 SUPERSEDES STANDARD PLAN T10 DATED MAY 20, 2011 - PAGE 237 OF THE STANDARD PLANS BOOK DATED 2010.

REVISED STANDARD PLAN RSP T10

2010 REVISED STANDARD PLAN RSP T10

12-18-12

Dist	COUNTY	ROUTE	POST MILES TOTAL PROJECT	SHEET No.	TOTAL SHEETS
11	SD	8	R25.9/R32.2	57	67

REGISTERED CIVIL ENGINEER

July 18, 2014
PLANS APPROVAL DATE

REGISTERED PROFESSIONAL ENGINEER Gurinderpal Bhullar No. C48815 Exp. 9-30-14 CIVIL STATE OF CALIFORNIA

THE STATE OF CALIFORNIA OR ITS OFFICERS OR AGENTS SHALL NOT BE RESPONSIBLE FOR THE ACCURACY OR COMPLETENESS OF SCANNED COPIES OF THIS PLAN SHEET.

TO ACCOMPANY PLANS DATED 08-11-14

NOTES:

See Revised Standard Plan RSP T9 for tables.

Use cone spacing X for taper segment, Y for tangent segment or Z for conflict situations, as approriate, per Table 1, unless X, Y, or Z cone spacing is shown on this sheet.

Unless otherwise specified in the special provisions, all temporary warning signs shall have black legend on fluorescent orange background.

California codes are designated by (CA). Otherwise, Federal (MUTCD) codes are shown.

TYPICAL LANE CLOSURE WITH REVERSIBLE CONTROL

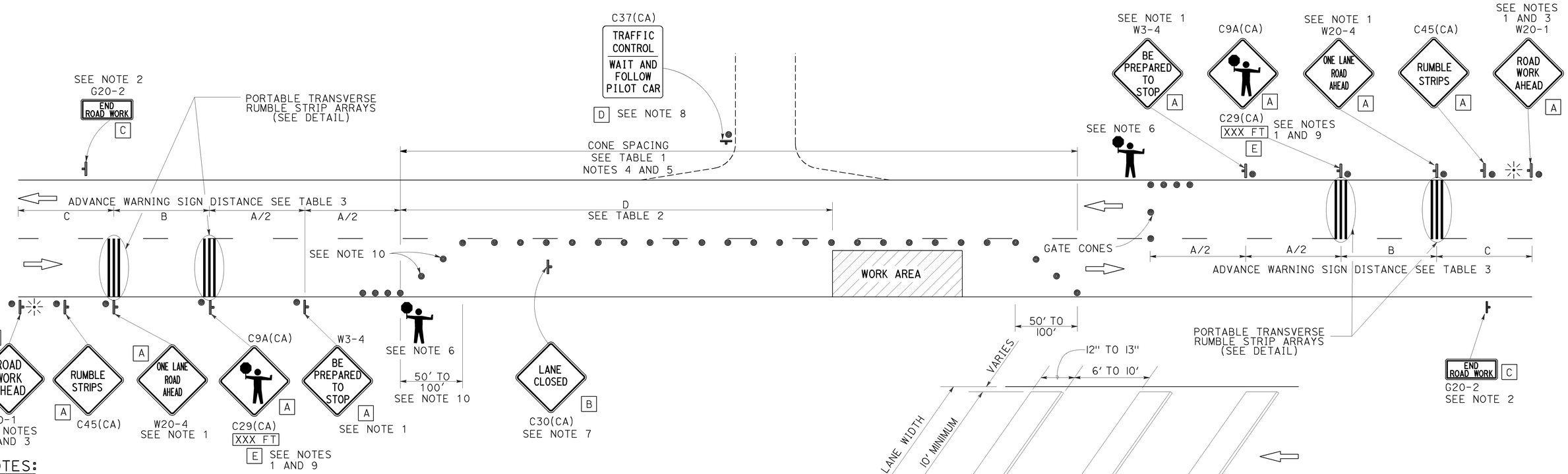

PORTABLE TRANSVERSE RUMBLE STRIP ARRAY DETAIL

NOTES:

1. Each advance warning sign in each direction of travel shall be equipped with at least two flags for daytime closure. Each flag shall be at least 16" x 16" in size and shall be orange or fluorescent red-orange in color. Flashing beacons shall be placed at the locations indicated for lane closure during hours of darkness.
2. A G20-2 "END ROAD WORK" sign, as appropriate, shall be placed at the end of the lane control unless the end of work area is obvious, or ends within a larger project's limits.
3. If the W20-1 sign would follow within 2000' of a stationary W20-1 or G20-1 "ROAD WORK NEXT _____ MILES", use a W20-4 sign for the first advance warning sign.
4. All cones used for lane closures during the hours of darkness shall be fitted with retroreflective bands (or sleeves) as specified in the specifications.
5. Portable delineators, placed at one-half the spacing indicated for traffic cones, may be used instead of cones for daytime closures only.
6. Additional advance flaggers may be required. Flagger should stand in a conspicuous place, be visible to approaching traffic as well as approaching vehicles after the first vehicle has stopped. During the hours of darkness, the flagging-station and flagger shall be illuminated and clearly visible to approaching traffic. The illumination footprint of the lighting on the ground shall be at least 20' in diameter. Place a minimum of four cones at 50' intervals in advance of flagger station as shown.
7. Place C30(CA) "LANE CLOSED" sign at 500' to 1000' intervals throughout extended work areas. They are optional if the work area is visible from the flagger station.
8. When a pilot car is used, place a C37(CA) "TRAFFIC CONTROL-WAIT AND FOLLOW PILOT CAR" sign with black legend on white background at all intersections, driveways and alleys without a flagger within traffic control area. Signs shall be clean and visible at all times. Where traffic can not be effectively self-regulated, at least one flagger shall be used at each intersection within traffic control area.
9. An optional C29(CA) sign may be placed below the C9A(CA) sign.
10. Either traffic cones or barricades shall be placed on the taper. Barricades shall be Type I, II, or III.
11. The color of the portable transverse rumble strips shall be black or orange. Use 2 arrays, each array shall consist of 3 rumble strips.
12. Portable transverse rumble strips shall not be placed on sharp horizontal or vertical curves nor shall they be placed through pedestrian crossings.
13. If the portable transverse rumble strips become out of alignment (skewed) by more than 6 inches, measured from one end to the other, they shall be readjusted to bring the placement back to the original location.

LEGEND

- TRAFFIC CONE
- TEMPORARY TRAFFIC CONTROL SIGN
- PORTABLE FLASHING BEACON
- FLAGGER

SIGN PANEL SIZE (Min)

A	48" x 48"
B	30" x 30"
C	36" x 18"
D	36" x 42"
E	20" x 7"

STATE OF CALIFORNIA
DEPARTMENT OF TRANSPORTATION

TRAFFIC CONTROL SYSTEM FOR LANE CLOSURE ON TWO LANE CONVENTIONAL HIGHWAYS

NO SCALE

RSP T13 DATED JULY 18, 2014 SUPERSEDES RSP T13 DATED APRIL 19, 2013 AND STANDARD PLAN T13 DATED MAY 20, 2011 - PAGE 241 OF THE STANDARD PLANS BOOK DATED 2010.

REVISED STANDARD PLAN RSP T13

2010 REVISED STANDARD PLAN RSP T13

6-19-14

Dist	COUNTY	ROUTE	POST MILES TOTAL PROJECT	SHEET No.	TOTAL SHEETS
11	SD	8	R25.9/R32.2	58	67

REGISTERED CIVIL ENGINEER

April 19, 2013
PLANS APPROVAL DATE

REGISTERED PROFESSIONAL ENGINEER Gurinderpal Bhullar No. C48815 Exp. 9-30-14 CIVIL STATE OF CALIFORNIA

THE STATE OF CALIFORNIA OR ITS OFFICERS OR AGENTS SHALL NOT BE RESPONSIBLE FOR THE ACCURACY OR COMPLETENESS OF SCANNED COPIES OF THIS PLAN SHEET.

TO ACCOMPANY PLANS DATED 08-11-14

TYPICAL RAMP CLOSURES

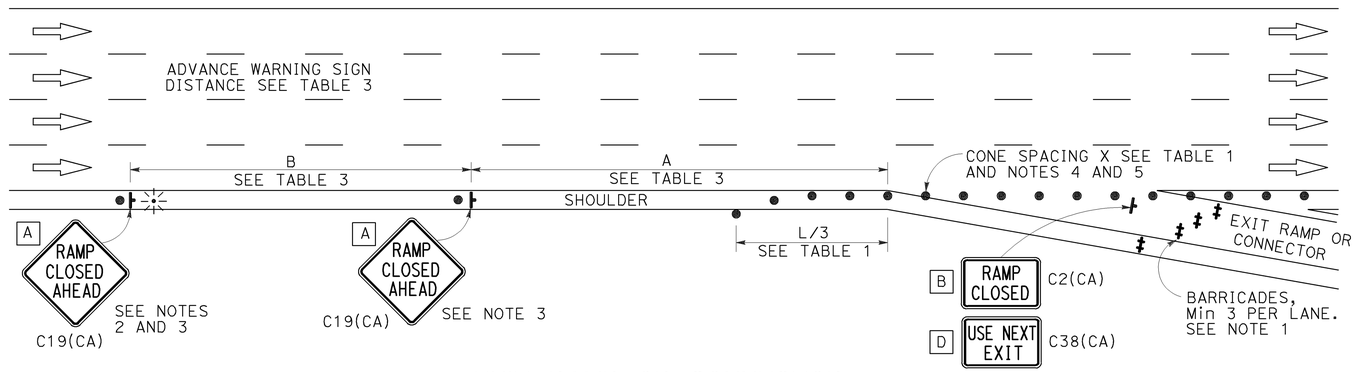

EXIT RAMP OR CONNECTOR

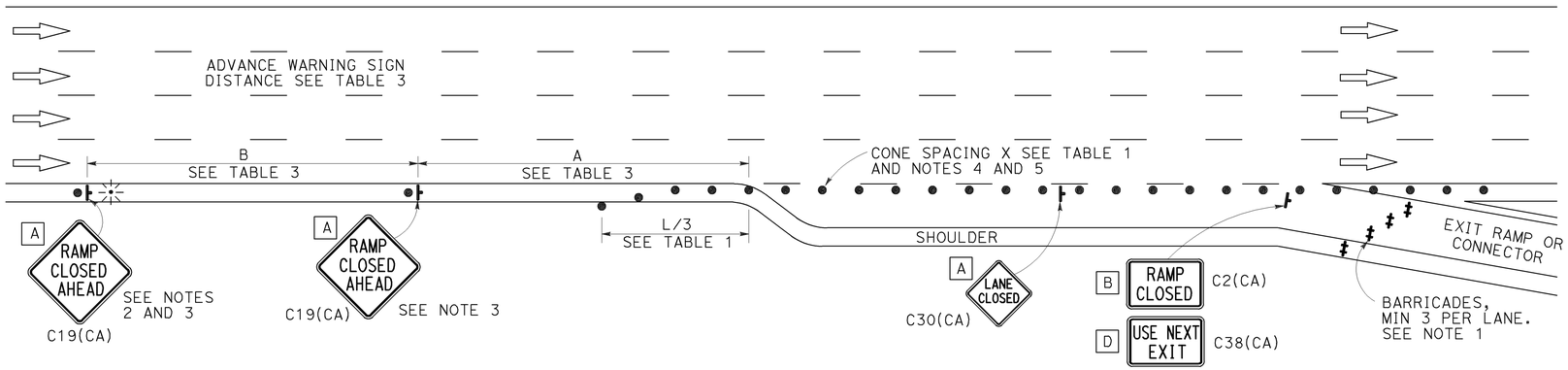

EXIT RAMP OR CONNECTOR WITH ADDITIONAL LANE

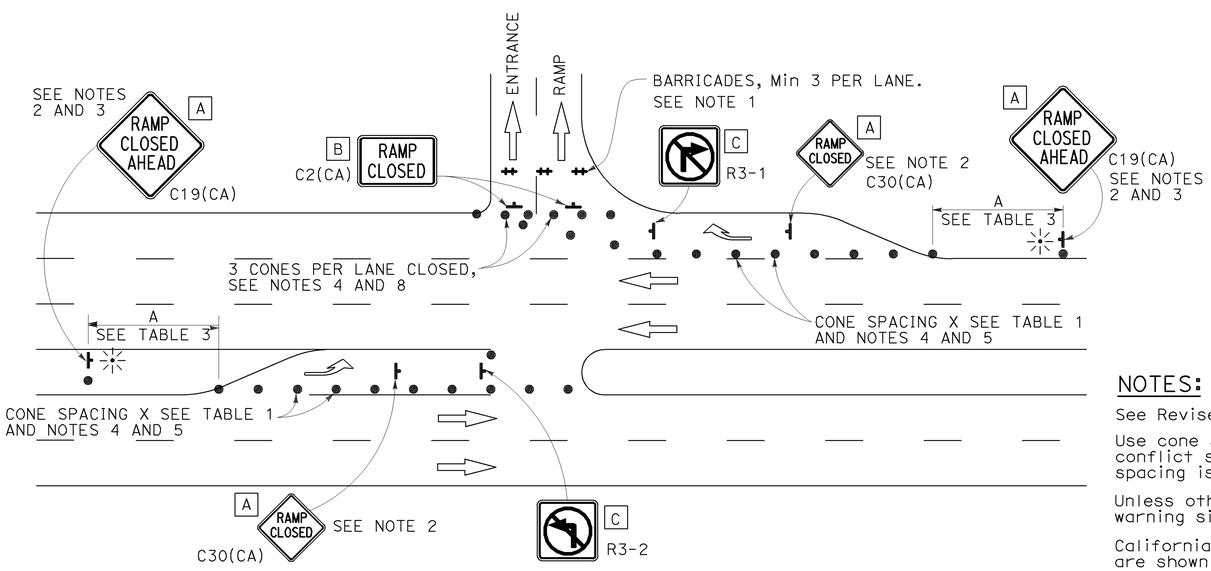

ENTRANCE RAMP WITH TURNING POCKETS

SIGN PANEL SIZE (Min)

- A 48" × 48"
- B 48" × 30"
- C 36" × 36"
- D 48" × 36"

LEGEND

- TRAFFIC CONE
- TEMPORARY TRAFFIC CONTROL SIGN
- BARRICADES
- PORTABLE FLASHING BEACON

NOTES:

1. Barricades shall be Type I, II, or III for closures lasting one week or less and Type III for closures lasting longer than one week.
2. In addition to placing the C19(CA) "RAMP CLOSED AHEAD" and C30(CA) "RAMP CLOSED" signs, black on orange overlay plates with the word "CLOSED" may be mounted, as directed by the Engineer, on all guide signs that refer to the closed ramp. The letter size on the overlay shall be the same as the guide sign.
3. Each advance C19(CA) "RAMP CLOSED AHEAD" sign shall be equipped with at least two flags for daytime closure. Each flag shall be at least 16" × 16" in size and shall be orange or fluorescent red-orange in color. A flashing beacon shall be placed on top of the first C19(CA) sign during hours of darkness.
4. All cones used for ramp closures during the hours of darkness shall be fitted with retroreflective bands (or sleeves) as specified in the specifications.
5. Portable delineators, placed at one-half the spacing indicated for traffic cones, may be used instead of cones for daytime ramp closures only.
6. At least one person shall be assigned to provide full time maintenance of traffic control devices, unless otherwise directed by the Engineer.
7. The existing "EXIT" signs shall be covered during ramp closures.
8. A minimum of 3 cones shall be placed transversely across each closed lane and shoulder.

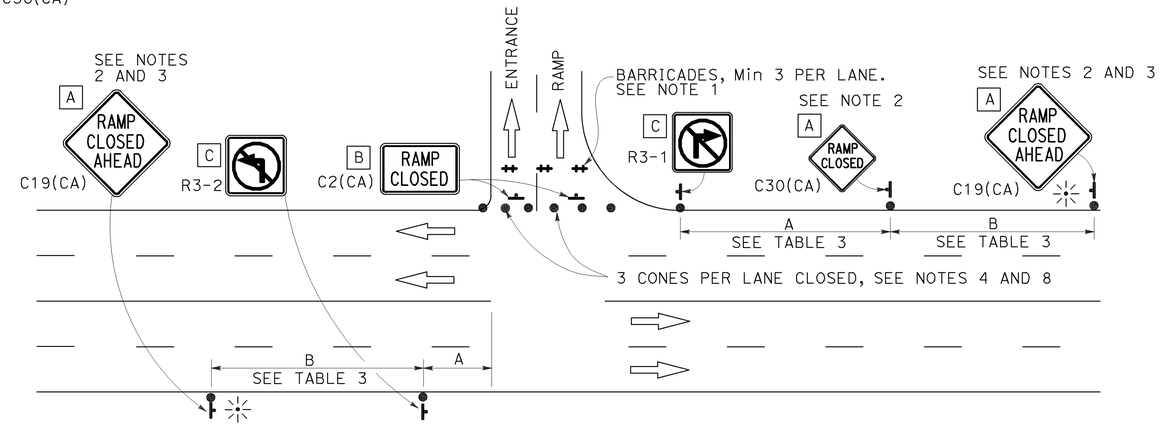

ENTRANCE RAMP WITHOUT TURNING POCKETS

NOTES:

See Revised Standard Plan RSP T9 for tables.

Use cone spacing X for taper segment, Y for tangent segment or Z for conflict situations, as approriate, per Table 1, unless X, Y, or Z cone spacing is shown on this sheet.

Unless otherwise specified in the special provisions, all temporary warning signs shall have black legend on fluorescent orange background.

California codes are designated by (CA). Otherwise, Federal (MUTCD) codes are shown.

STATE OF CALIFORNIA
DEPARTMENT OF TRANSPORTATION

TRAFFIC CONTROL SYSTEM FOR RAMP CLOSURE

NO SCALE

RSP T14 DATED APRIL 19, 2013 SUPERSEDES STANDARD PLAN T14 DATED MAY 20, 2011 - PAGE 242 OF THE STANDARD PLANS BOOK DATED 2010.

REVISED STANDARD PLAN RSP T14

2010 REVISED STANDARD PLAN RSP T14

12-18-12

Dist	COUNTY	ROUTE	POST MILES TOTAL PROJECT	SHEET No.	TOTAL SHEETS
11	SD	8	R25.9/R32.2	59	67

Theresa Gabriel
REGISTERED ELECTRICAL ENGINEER

July 19, 2013
PLANS APPROVAL DATE

REGISTERED PROFESSIONAL ENGINEER Theresa Aziz Gabriel No. E15129 Exp. 6-30-14 ELECTRICAL STATE OF CALIFORNIA

THE STATE OF CALIFORNIA OR ITS OFFICERS OR AGENTS SHALL NOT BE RESPONSIBLE FOR THE ACCURACY OR COMPLETENESS OF SCANNED COPIES OF THIS PLAN SHEET.

TO ACCOMPANY PLANS DATED 08-11-14

LEGEND:

AB	ABANDON. IF APPLIED TO CONDUIT, REMOVE CONDUCTORS
BC	INSTALL PULL BOX IN EXISTING CONDUIT RUN
BP	PEDESTRIAN BARRICADE, TYPE AS INDICATED ON PLAN
CB	INSTALL CONDUIT INTO EXISTING PULL BOX
CC	CONNECT NEW AND EXISTING CONDUIT. REMOVE EXISTING CONDUCTORS AND INSTALL CONDUCTORS AS INDICATED
CF	CONDUIT TO REMAIN FOR FUTURE USE. REMOVE CONDUCTORS. INSTALL PULL TAPE
DH	DETECTOR HANDHOLE
FA	FOUNDATION TO BE ABANDONED
IS	INSTALL SIGN ON SIGNAL MAST ARM
NS	NO SLIP BASE ON STANDARD
PEC	PHOTOELECTRIC CONTROL
PEU	PHOTOELECTRIC UNIT
RC	EQUIPMENT OR MATERIAL TO BE REMOVED AND BECOME THE PROPERTY OF THE CONTRACTOR
RE	REMOVE ELECTROLIER, FUSES AND BALLAST. TAPE ENDS OF CONDUCTORS
RL	RELOCATE EQUIPMENT
RR	REMOVE AND REUSE EQUIPMENT
RS	REMOVE AND SALVAGE EQUIPMENT
SC	SPLICE NEW TO EXISTING CONDUCTORS
SD	SERVICE DISCONNECT
TSP	TELEPHONE SERVICE POINT

ABBREVIATIONS

APS	ACCESSIBLE PEDESTRIAN SIGNAL
BBS	BATTERY BACKUP SYSTEM
BC	BOLT CIRCLE
BPB	BICYCLE PUSH BUTTON
C	CONDUIT
CB	CIRCUIT BREAKER
CCTV	CLOSED CIRCUIT TELEVISION
Ckt	CIRCUIT
CMS	CHANGEABLE MESSAGE SIGN
Ctid	CALTRANS IDENTIFICATION
Comm	COMMUNICATION
DLC	LOOP DETECTOR LEAD-IN CABLE
EMS	EXTINGUISHABLE MESSAGE SIGN
EVUC	EMERGENCY VEHICLE UNIT CABLE
EVUD	EMERGENCY VEHICLE UNIT DETECTOR
FB	FLASHING BEACON
FBCA	FLASHING BEACON CONTROL ASSEMBLY
FBS	FLASHING BEACON WITH SLIP BASE
FO	FIBER OPTIC
G	EQUIPMENT GROUNDING CONDUCTOR
GB	GROUND BUS
GFCI	GROUND FAULT CIRCUIT INTERRUPTER
HAR	HIGHWAY ADVISORY RADIO
Hex	HEXAGONAL
HPS	HIGH PRESSURE SODIUM
IISNS	INTERNALLY ILLUMINATED STREET NAME SIGN
ISL	INDUCTION SIGN LIGHTING
LED	LIGHT EMITTING DIODE
LMA	LUMINAIRE MAST ARM
LPS	LOW PRESSURE SODIUM
Ltg	LIGHTING
Lum	LUMINAIRE
M	METERED
MAT	MAST ARM MOUNTING TOP ATTACHMENT
MAS	MAST ARM MOUNTING SIDE ATTACHMENT
M/M	MULTIPLE TO MULTIPLE TRANSFORMER
Mtg	MOUNTING
MV	MERCURY VAPOR LIGHTING FIXTURE
MVDS	MICROWAVE VEHICLE DETECTION SYSTEM
N	NEUTRAL (GROUNDED CONDUCTOR)
NB	NEUTRAL BUS
NC	NORMALLY CLOSE
NO	NORMALLY OPEN
P	CIRCUIT BREAKER'S POLE
PB	PULL BOX
PBA	PUSH BUTTON ASSEMBLY
PEC	PHOTOELECTRIC CONTROL
Ped	PEDESTRIAN
PEU	PHOTOELECTRIC UNIT
PT	CONDUIT WITH PULL TAPE
RE	RELOCATED EQUIPMENT
RM	RAMP METERING
RWIS	ROADSIDE WEATHER INFORMATION SYSTEM
SB	SLIP BASE
SIC	SIGNAL INTERCONNECT CABLE
Sig	SIGNAL
SMA	SIGNAL MAST ARM
SNS	STREET NAME SIGN
SP	SERVICE POINT
TDC	TELEPHONE DEMARCATION CABINET
TMS	TRAFFIC MONITORING STATION
TOS	TRAFFIC OPERATIONS SYSTEM
Veh	VEHICLE
VIVDS	VIDEO IMAGE VEHICLE DETECTION SYSTEM
WIM	WEIGH-IN-MOTION
Xfmr	TRANSFORMER

SOFFIT AND WALL MOUNTED LUMINAIRES

PENDANT, 70 W HPS UNLESS OTHERWISE SPECIFIED

FLUSH, 70 W HPS UNLESS OTHERWISE SPECIFIED

WALL SURFACE, 70 W HPS UNLESS OTHERWISE SPECIFIED

EXISTING SOFFIT OR WALL LUMINAIRE TO REMAIN UNMODIFIED

EXISTING SOFFIT OR WALL LUMINAIRE TO BE MODIFIED AS SPECIFIED

NOTE:

Arrow indicates "street side" of luminaire.

COMMONLY USED SYMBOLS FOR UNITED STATES CUSTOMARY UNITS OF MEASUREMENT:

SYMBOL USED	DEFINITIONS
Ω	OHMS
min	MINUTE
s	SECOND
bps	BITS PER SECOND
Bps	BYTES PER SECOND
A	AMPERE
V	VOLT
V(dc)	VOLT (DIRECT CURRENT)
V(ac)	VOLT (ALTERNATING CURRENT)
FC	FOOT - CANDLE
W	WATTS
VA	VOLT-AMPERE
M	MEGA
k	KILO
m	MILLI
μ	MICRO
P	PICO
Hz	HERTZ

MISCELLANEOUS ELECTROLIERS

NEW	EXISTING	
		LUMINAIRE ON WOOD POLE
		NON-STANDARD ELECTROLIER (SEE PROJECT NOTES OR PROJECT PLANS)
		CITY ELECTROLIER
		ELECTROLIER FOUNDATION (FUTURE INSTALLATION)

NOTES:

1. HPS luminaires shall be 310 W HPS when installed on Type 21, 21D, 30, 31 and 32 Standards, unless otherwise specified. HPS luminaires shall be 200 W when installed on other type standards or poles, unless otherwise specified.
2. LED luminaires shall be 235 W when installed on Type 21, 21D, 30, 31 and 32 Standards, unless otherwise specified. LED luminaires shall be 165 W when installed on other type standards or poles, unless otherwise specified.
3. Luminaires shall be the cutoff type, ANSI Type III medium cutoff lighting distribution, unless otherwise specified.

STANDARD ELECTROLIER

NEW	EXISTING	STANDARD TYPE
		15
		15D
		15 STRUCTURE
		15D STRUCTURE
		21
		21D
		21 STRUCTURE
		21D STRUCTURE
		30
		31
		32

STATE OF CALIFORNIA
DEPARTMENT OF TRANSPORTATION

ELECTRICAL SYSTEMS (LEGEND AND ABBREVIATIONS)

NO SCALE

RSP ES-1A DATED JULY 19, 2013 SUPERSEDES STANDARD PLAN ES-1A DATED MAY 20, 2011 - PAGE 425 OF THE STANDARD PLANS BOOK DATED 2010.

REVISED STANDARD PLAN RSP ES-1A

2010 REVISED STANDARD PLAN RSP ES-1A

Dist	COUNTY	ROUTE	POST MILES TOTAL PROJECT	SHEET No.	TOTAL SHEETS
11	SD	8	R25.9/R32.2	60	67

Theresa Gabriel
REGISTERED ELECTRICAL ENGINEER

July 19, 2013
PLANS APPROVAL DATE

REGISTERED PROFESSIONAL ENGINEER
Theresa Aziz Gabriel
No. E15129
Exp. 6-30-14
ELECTRICAL
STATE OF CALIFORNIA

THE STATE OF CALIFORNIA OR ITS OFFICERS OR AGENTS SHALL NOT BE RESPONSIBLE FOR THE ACCURACY OR COMPLETENESS OF SCANNED COPIES OF THIS PLAN SHEET.

TO ACCOMPANY PLANS DATED 08-11-14

CONDUIT

NEW	EXISTING	
		LIGHTING CONDUIT, UNLESS OTHERWISE INDICATED OR NOTED
		TRAFFIC SIGNAL CONDUIT
C	c	COMMUNICATION CONDUIT
T	t	TELEPHONE CONDUIT
F	f	FIRE ALARM CONDUIT
FO	fo	FIBER OPTIC CONDUIT
		CONDUIT TERMINATION
R	r	CONDUIT RISER ATTACHED TO THE STRUCTURE OR SERVICE POLE

SERVICE EQUIPMENT

NEW	EXISTING	
OH	oh	OVERHEAD LINES
U	U	WOOD POLE, "U" INDICATES UTILITY OWNED
		POLE GUY WITH ANCHOR
		UTILITY TRANSFORMER - GROUND MOUNTED
III	III	SERVICE EQUIPMENT ENCLOSURE TYPE. DOOR INDICATES FRONT OF ENCLOSURE
T	t	TELEPHONE DEMARCATION CABINET

POLE-MOUNTED SERVICE DESIGNATION

TYPE H SERVICE, 28'-10" — TYPE OF INSTALLATION AND POLE HEIGHT ABOVE GRADE

FLASHING BEACON

NEW	EXISTING	
R	R	FLASHING BEACON (ONE VEHICLE SIGNAL HEAD WITH BACKPLATE AND VISOR) "R" INDICATES RED INDICATION, "Y" INDICATES YELLOW INDICATION
Y Y	Y Y	FLASHING BEACON WITH TYPE 15-FBS STANDARD AND A SIGN.
R R	R R	FLASHING BEACON WITH TYPES 9, 9A OR 9B SIGN UNLESS OTHERWISE SPECIFIED OR INDICATED

SIGNAL EQUIPMENT

NEW	EXISTING	
C	C	PEDESTRIAN SIGNAL HEAD "C" INDICATES COUNTDOWN PEDESTRIAN HEAD
		PUSH BUTTON ASSEMBLY POST
		PEDESTRIAN BARRICADE
		VEHICLE SIGNAL HEAD (WITH BACKPLATE AND 3-SECTIONS: RED, YELLOW AND GREEN)
		VEHICLE SIGNAL HEAD WITH ANGLE VISOR
PV	PV	MODIFICATIONS OF BASIC SYMBOL: "L" INDICATES ALL NON-ARROW SECTIONS LOUVERED "LG" INDICATES LOUVERED GREEN SECTION ONLY "PV" INDICATES ALL 12" SECTIONS PROGRAMMED VISIBILITY "8" INDICATES ALL 8" SECTIONS (ONLY WHEN SPECIFIED)
		VEHICLE SIGNAL HEAD CONSISTING OF RED, YELLOW AND GREEN LEFT ARROW SECTIONS
		VEHICLE SIGNAL HEAD CONSISTING OF RED AND YELLOW SECTIONS WITH AN UP GREEN ARROW SECTION
		VEHICLE SIGNAL HEAD (5 SECTION) CONSISTING OF RED, YELLOW AND GREEN SECTIONS WITH YELLOW AND GREEN RIGHT ARROW SECTIONS
		TYPE 15TS STANDARD WITH VEHICLE SIGNAL HEAD AND LUMINAIRE
		TYPE 21TS STANDARD WITH VEHICLE SIGNAL HEAD AND LUMINAIRE
		STANDARD WITH LUMINAIRE AND SIGNAL MAST ARMS AND ATTACHED VEHICLE SIGNAL HEADS
		TYPE 1 STANDARD WITH ATTACHED VEHICLE SIGNAL HEADS
		STANDARD WITH A SIGNAL MAST ARM, ATTACHED VEHICLE SIGNAL HEADS AND INTERNALLY ILLUMINATED STREET NAME SIGN
		CONTROLLER ASSEMBLY. DOOR INDICATES FRONT OF CABINET

SIGNAL EQUIPMENT Cont

NEW	EXISTING	
		GUARD POST
		TYPE 1 STANDARD WITH RAMP METERING SIGN
		OPTICAL DETECTOR FOR THE EMERGENCY VEHICLE DETECTION SYSTEM

NOTES:

1. All signal sections shall be 12" unless shown otherwise.
2. Signal heads shall be provided with backplates unless shown otherwise.

ILLUMINATED OVERHEAD SIGN

NEW	EXISTING	
		SINGLE POST, SINGLE ILLUMINATED SIGN, BALANCED BUTTERFLY
		SINGLE POST, DOUBLE ILLUMINATED SIGN, BALANCED BUTTERFLY
		SINGLE POST, SINGLE ILLUMINATED SIGN, FULL CANTILEVER
		DOUBLE POST, SINGLE ILLUMINATED SIGN
		SINGLE ILLUMINATED SIGN MOUNTED ON STRUCTURE
		DOUBLE POST, SINGLE ILLUMINATED SIGN WITH ELECTROLIER

STATE OF CALIFORNIA
DEPARTMENT OF TRANSPORTATION

ELECTRICAL SYSTEMS (LEGEND AND ABBREVIATIONS)

NO SCALE

RSP ES-1B DATED JULY 19, 2013 SUPERSEDES STANDARD PLAN ES-1B DATED MAY 20, 2011 - PAGE 426 OF THE STANDARD PLANS BOOK DATED 2010.

REVISED STANDARD PLAN RSP ES-1B

2010 REVISED STANDARD PLAN RSP ES-1B

7-15-13

Dist	COUNTY	ROUTE	POST MILES TOTAL PROJECT	SHEET No.	TOTAL SHEETS
11	SD	8	R25.9/R32.2	61	67

Theresa Gabriel
REGISTERED ELECTRICAL ENGINEER

July 19, 2013
PLANS APPROVAL DATE

REGISTERED PROFESSIONAL ENGINEER
Theresa Aziz Gabriel
No. E15129
Exp. 6-30-14
ELECTRICAL
STATE OF CALIFORNIA

THE STATE OF CALIFORNIA OR ITS OFFICERS OR AGENTS SHALL NOT BE RESPONSIBLE FOR THE ACCURACY OR COMPLETENESS OF SCANNED COPIES OF THIS PLAN SHEET.

TO ACCOMPANY PLANS DATED 08-11-14

EQUIPMENT IDENTIFICATION

ILLUMINATED SIGN IDENTIFICATION NUMBER:

SIGN No. 12345
10 ISL SCI 1.0

- SIGN NUMBER - PLACE ON POST OR STRUCTURE
- TRANSFORMER RATING (kVA)
- LIGHTING CONTROL TYPE
- NUMBER AND TYPE OF FIXTURES

DO NOT PLACE ON STANDARD OR STRUCTURE

ELECTROLIER OR EQUIPMENT IDENTIFICATION NUMBER:

12345 - 15'-0"

- MAST ARM LENGTH, IF SHOWN. DO NOT PLACE ON STANDARD OR STRUCTURE
- EQUIPMENT NUMBER - PLACE ON STANDARD OR STRUCTURE. EXISTING EQUIPMENT NUMBERS ARE SHOWN IN PARENTHESIS

CONDUIT AND CONDUCTOR IDENTIFICATION:

1½"C, 2#10, 15#14, 2 DLC, 12P#18 (PAIR)

- NUMBER AND SIZE OF CONDUCTORS AND CABLES
- SIZE OF CONDUIT IN INCHES

ø1, ø2, ø2P, etc.	TRAFFIC PHASE IDENTIFICATION FOR SIGNAL FACES, DETECTORS AND PHASE DIAGRAMS
1 2 3	LEGEND NUMBERS
A B C	EQUIPMENT, SIGNAL POLES, INSTALLATION OR ITEMS
1 2 3	CONDUIT RUN NUMBERS

SIGNAL AND LIGHTING STANDARD (TYPICAL DESIGNATION):

19A - 3 - 100

- WIND VELOCITY = 100 mph
- CASE 3 ARM LOADING
- STANDARD TYPE
- STANDARD PLAN SHEET NUMBER
- DETAIL, NUMBER, SECTION, TYPE OR ELEVATION

MISCELLANEOUS EQUIPMENT

NEW	EXISTING	
CMS	cms	CHANGEABLE MESSAGE SIGN
		CLOSED CIRCUIT TELEVISION CAMERA
		HIGHWAY ADVISORY RADIO POLE AND ANTENNA
EMS	ems	EXTINGUISHABLE MESSAGE SIGN
M V	m v	DETECTION DEVICE M = MICROWAVE SENSOR V = VIDEO IMAGE SENSOR

WIRING DIAGRAM LEGEND

----	EXTERNAL CONDUCTOR
———	CONDUCTOR OR BUS
	TIE POINT
	CONTACTOR COIL
	CONTACTOR, NO CONTACT
	TERMINAL BLOCKS
	CONTACTOR, NC CONTACT
	ENCLOSURE BOND
	GROUNDING ELECTRODE
	CIRCUIT BREAKER
	RECEPTACLE

PULL BOXES

NEW	EXISTING	
		PULL BOX, No. 5 UNLESS OTHERWISE INDICATED OR NOTED
3	9A(21)	PULL BOX, ADDITIONAL DESIGNATIONS OR DESCRIPTIONS

3 No. 3½ PULL BOX
5 No. 5 PULL BOX
6 No. 6 PULL BOX
7 No. 7 (CEILING PULL BOX)
8 No. 8 (PENDANT SOFFIT PULL BOX)
9 No. 9 PULL BOX
9A No. 9A PULL BOX

(C) COMMUNICATIONS PULL BOX
(E) PULL BOX WITH EXTENSION
(S) SPRINKLER CONTROL PULL BOX
(21) ANCHOR BOLTS AND CONDUIT FOR FUTURE INSTALLATION OF TYPE 21 STANDARD
(T) TRAFFIC PULL BOX

VEHICLE DETECTORS

5 J 9 U

- VEHICLE DETECTOR DESIGNATION
- U = UPPER
  L = LOWER
- SLOT NUMBER IN INPUT FILE
- INPUT FILE (I OR J)
- PHASE

NEW	EXISTING	
		TYPE A DETECTOR LOOP. OUTLINE OF SAWCUT SHOWN
		TYPE B DETECTOR LOOP. OUTLINE OF SAWCUT SHOWN
		TYPE C DETECTOR LOOP. OUTLINE OF SAWCUT SHOWN
		TYPE D DETECTOR LOOP. OUTLINE OF SAWCUT SHOWN
		TYPE E DETECTOR LOOP. OUTLINE OF SAWCUT SHOWN
		TYPE Q DETECTOR LOOP. OUTLINE OF SAWCUT SHOWN
		MAGNETIC DETECTOR
DH	dh	DETECTOR HANDHOLE
		MICROWAVE OR VIDEO DETECTION ZONE

STATE OF CALIFORNIA
DEPARTMENT OF TRANSPORTATION

ELECTRICAL SYSTEMS (LEGEND AND ABBREVIATIONS)

NO SCALE

RSP ES-1C DATED JULY 19, 2013 SUPERSEDES STANDARD PLAN ES-1C DATED MAY 20, 2011 - PAGE 427 OF THE STANDARD PLANS BOOK DATED 2010.

REVISED STANDARD PLAN RSP ES-1C

2010 REVISED STANDARD PLAN RSP ES-1C

7-11-13

Dist	COUNTY	ROUTE	POST MILES TOTAL PROJECT	SHEET No.	TOTAL SHEETS
11	SD	8	R25.9/R32.2	62	67

Theresa Gabriel
REGISTERED ELECTRICAL ENGINEER

July 19, 2013
PLANS APPROVAL DATE

REGISTERED PROFESSIONAL ENGINEER Theresa Aziz Gabriel No. E15129 Exp. 6-30-14 ELECTRICAL STATE OF CALIFORNIA

THE STATE OF CALIFORNIA OR ITS OFFICERS OR AGENTS SHALL NOT BE RESPONSIBLE FOR THE ACCURACY OR COMPLETENESS OF SCANNED COPIES OF THIS PLAN SHEET.

TO ACCOMPANY PLANS DATED 08-11-14

2010 REVISED STANDARD PLAN RSP ES-5B

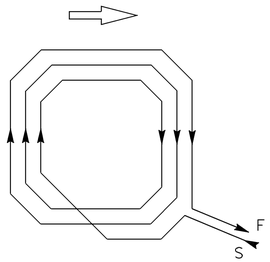

WINDING DETAIL

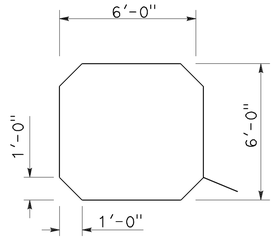

SAWCUT DETAIL

TYPE A LOOP DETECTOR CONFIGURATION

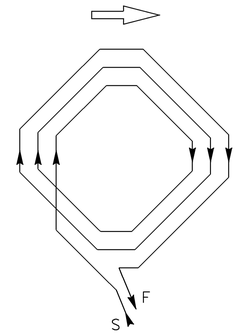

WINDING DETAIL

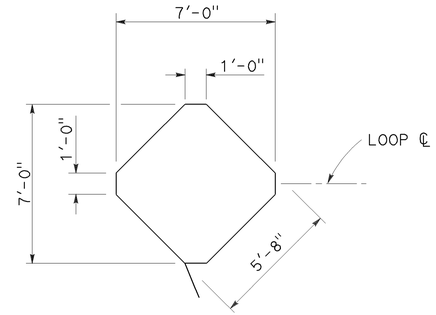

SAWCUT DETAIL

TYPE B LOOP DETECTOR CONFIGURATION

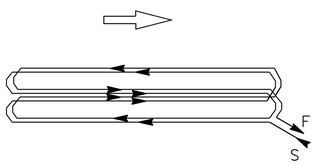

WINDING DETAIL

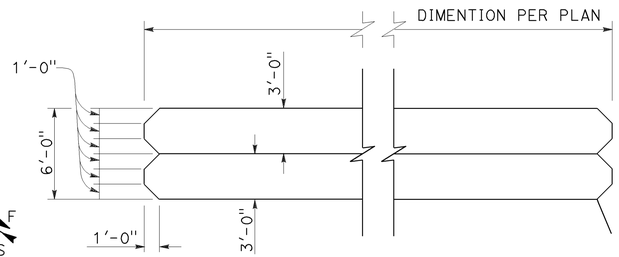

SAWCUT DETAIL

TYPE C LOOP DETECTOR CONFIGURATION

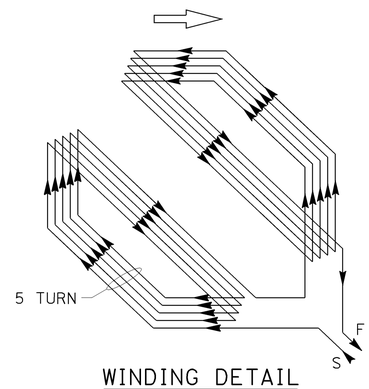

WINDING DETAIL

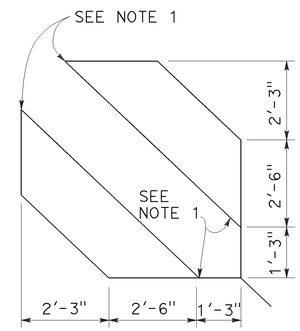

SAWCUT DETAIL

TYPE D LOOP DETECTOR CONFIGURATION

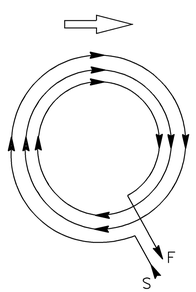

WINDING DETAIL

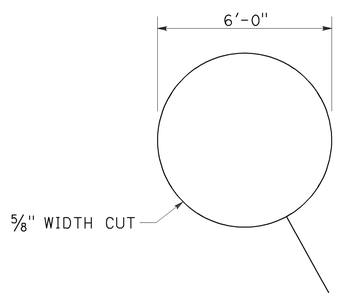

SAWCUT DETAIL

TYPE E LOOP DETECTOR CONFIGURATION

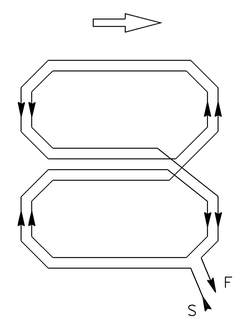

WINDING DETAIL

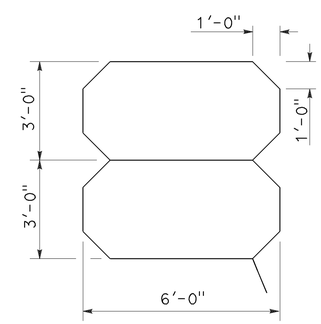

SAWCUT DETAIL

TYPE Q LOOP DETECTOR CONFIGURATION

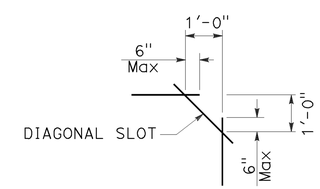

PLAN VIEW OF DIAGONAL SLOT AT CORNERS

NOTES:

1. Round corners of acute angle sawcuts to prevent damage to conductors.
2. Typical distance separating loops from edge to edge is 10' for Type A, B, D and E installation in single lane.

STATE OF CALIFORNIA
DEPARTMENT OF TRANSPORTATION

ELECTRICAL SYSTEMS (DETECTORS)

NO SCALE

RSP ES-5B DATED JULY 19, 2013 SUPERSEDES STANDARD PLAN ES-5B DATED MAY 20, 2011 - PAGE 449 OF THE STANDARD PLANS BOOK DATED 2010.

REVISED STANDARD PLAN RSP ES-5B

Dist	COUNTY	ROUTE	POST MILES TOTAL PROJECT	SHEET No.	TOTAL SHEETS
11	SD	8	R25.9/R32.2	63	67

Theresa Gabriel
REGISTERED ELECTRICAL ENGINEER

July 19, 2013
PLANS APPROVAL DATE

REGISTERED PROFESSIONAL ENGINEER Theresa Aziz Gabriel No. E15129 Exp. 6-30-14 ELECTRICAL STATE OF CALIFORNIA

THE STATE OF CALIFORNIA OR ITS OFFICERS OR AGENTS SHALL NOT BE RESPONSIBLE FOR THE ACCURACY OR COMPLETENESS OF SCANNED COPIES OF THIS PLAN SHEET.

TO ACCOMPANY PLANS DATED 08-11-14

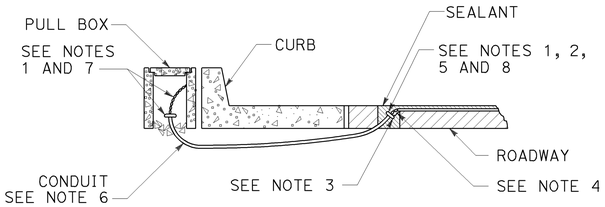

TYPE A
CURB TERMINATION DETAIL

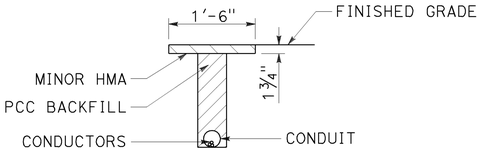

"T" TRENCH
DETAIL T

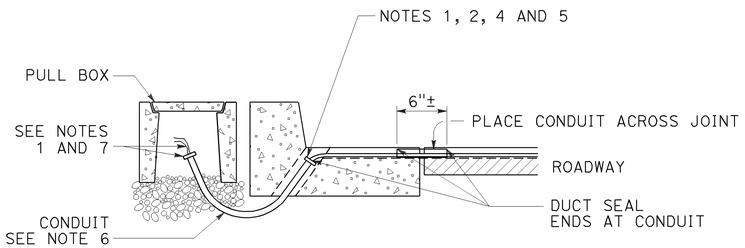

CROSS SECTION

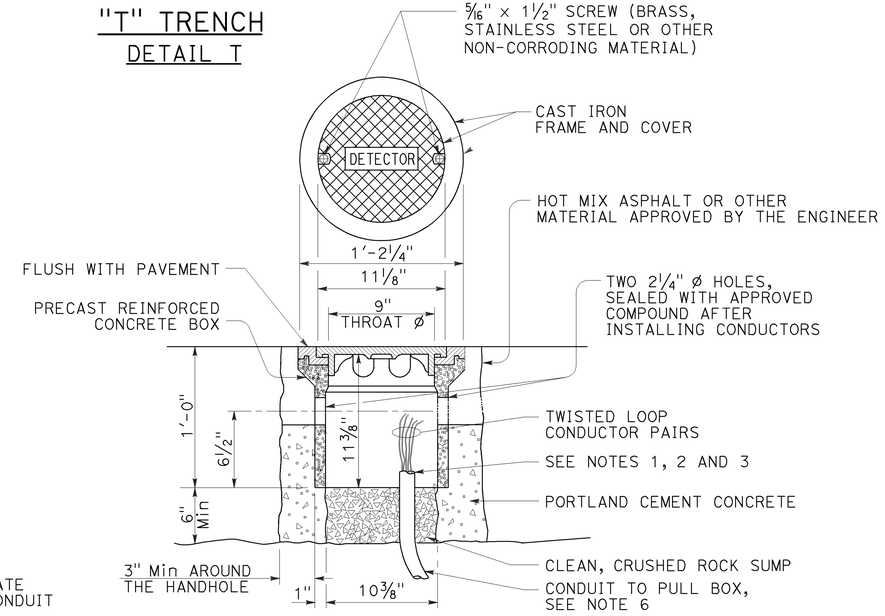

DETECTOR HANDHOLE DETAIL

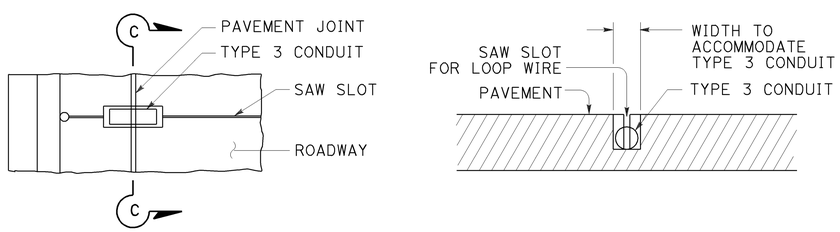

PLAN VIEW

SECTION C-C

TYPE B
CURB TERMINATION DETAIL

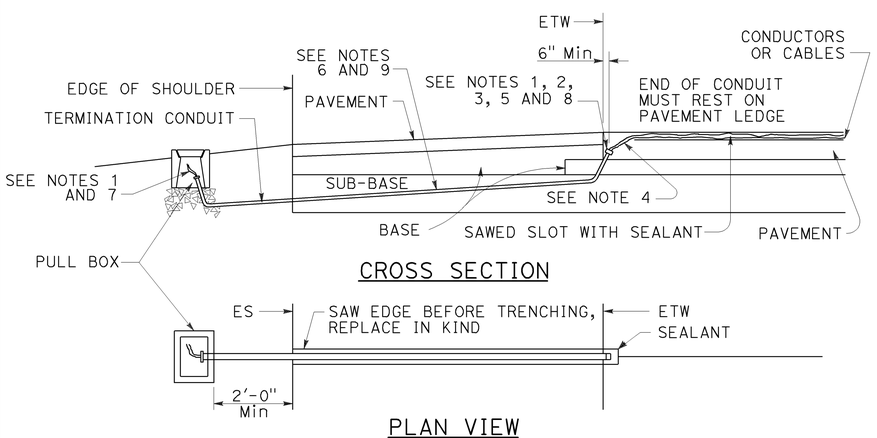

CROSS SECTION

PLAN VIEW

SHOULDER TERMINATION DETAILS

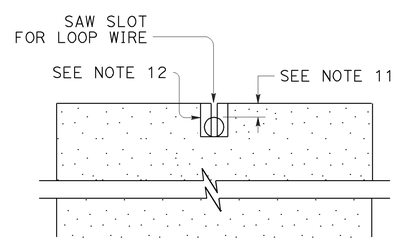

SECTION A-A

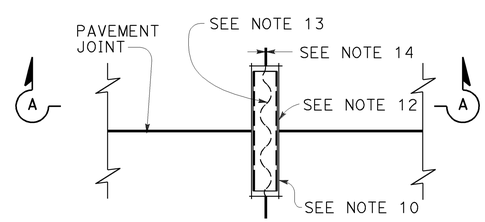

PLAN VIEW

TYPICAL LOOP LEAD-IN DETAIL
AT PAVEMENT JOINT

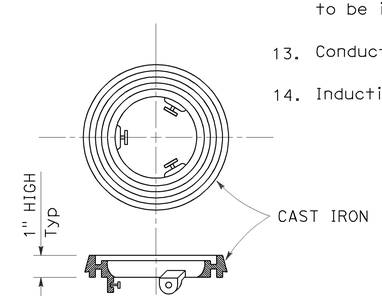

LOCKING GRADE RING

NOTES:

1. Bushing shall be used at end of conduit.
2. Tape detector conductors or cables 3" each side of bushings.
3. Install duct seal compound to each end of termination conduit before installing sealant.
4. Round all sharp edges where detector conductors or cables have to pass.
5. End of conduit shall be 3⅛" below roadway surface.
6.

Conduit size	Loop conductors
1"C minimum	1 to 2 pairs
1½"C minimum	3 to 4 pairs
2"C minimum	5 or more pairs

7. Splice detector conductors or cables to detector lead-in-cable.
8. Location of detector handhole when shown on plans.
9. When the shoulder and traveled way are paved with the same material and there is no joint between them, the conduit shall extend only 2'-0" into the shoulder pavement.
10. ¾"C, Type 3 conduit 6" long minimum, plug both ends with duct compound to keep out sealant.
11. ½" Minimum between top of conduit and pavement surface.
12. Sawcut shall not exceed 1" in width and ⅛" longer than conduit to be installed.
13. Conductors with ½" minimum slack inside conduit.
14. Inductive loop detector saw slot.

STATE OF CALIFORNIA
DEPARTMENT OF TRANSPORTATION

ELECTRICAL SYSTEMS (CURB TERMINATION AND HANDHOLE)

NO SCALE

RSP ES-5D DATED JULY 19, 2013 SUPERSEDES STANDARD PLAN ES-5D DATED MAY 20, 2011 - PAGE 451 OF THE STANDARD PLANS BOOK DATED 2010.

REVISED STANDARD PLAN RSP ES-5D

2010 REVISED STANDARD PLAN RSP ES-5D

7-9-13

DIST	COUNTY	ROUTE	POST MILES TOTAL PROJECT	SHEET NO.	TOTAL SHEETS
11	SD	8	R25.9/R32.2	64	67

Theresa Gabriel
REGISTERED ELECTRICAL ENGINEER

July 19, 2013
PLANS APPROVAL DATE

REGISTERED PROFESSIONAL ENGINEER Theresa Aziz Gabriel No. E15129 Exp. 6-30-14 ELECTRICAL STATE OF CALIFORNIA

THE STATE OF CALIFORNIA OR ITS OFFICERS OR AGENTS SHALL NOT BE RESPONSIBLE FOR THE ACCURACY OR COMPLETENESS OF SCANNED COPIES OF THIS PLAN SHEET.

TO ACCOMPANY PLANS DATED 08-11-14

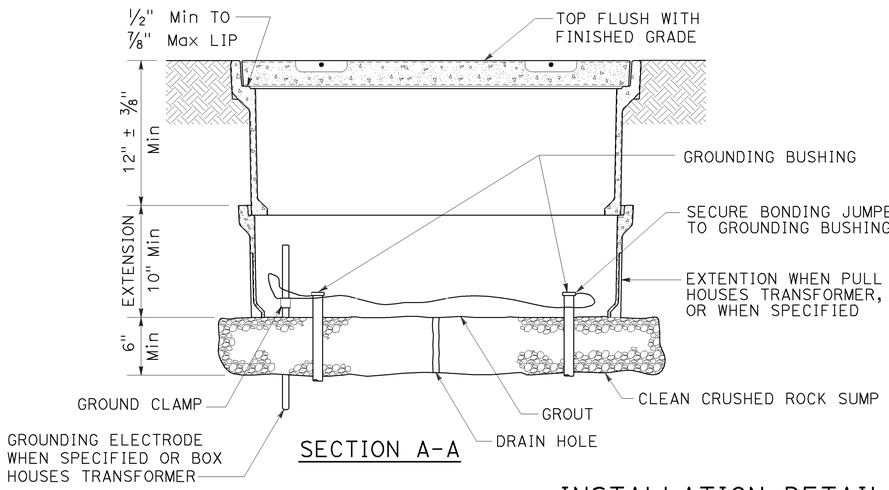

SECTION A-A

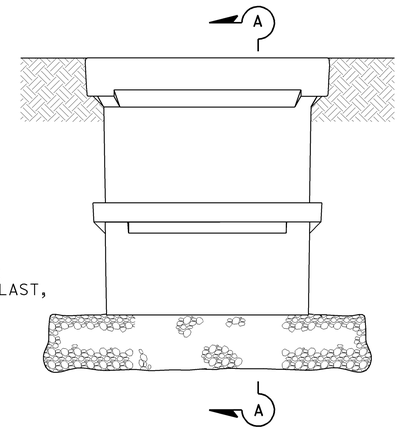

SIDE VIEW

INSTALLATION DETAILS

DETAIL A

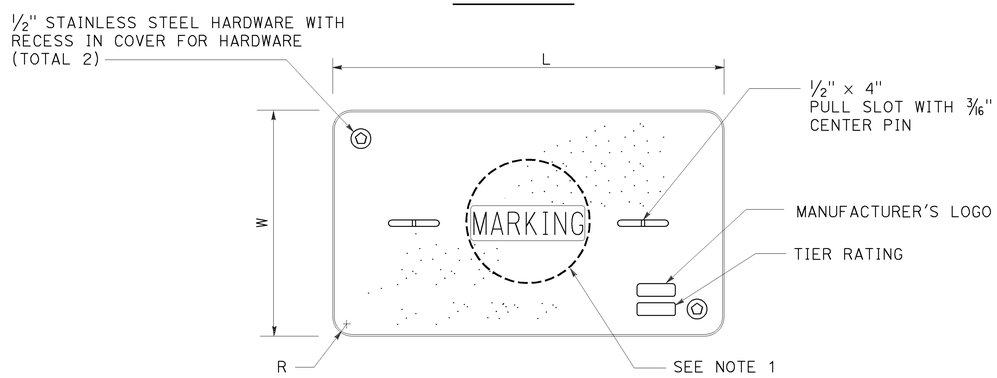

COVER TOP VIEW

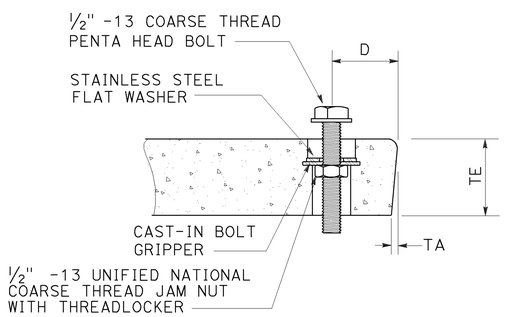

TYPICAL COVER CAPTIVE BOLT

OR SIMILAR

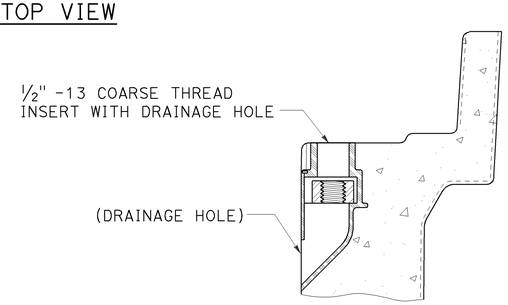

TYPICAL THREADED INSERT

OR SIMILAR

DIMENSION TABLE										
PULL BOX	PULL BOX			COVER						
	MINIMUM DEPTH BOX	MINIMUM DEPTH EXTENSION	MAXIMUM WEIGHT	L	W	R	TE	TA	D	MAXIMUM WEIGHT
No. 3½	12"	N/A	40 lb	1′ - 3⅜"	10⅛"	1⅜"	2"	⅛"	1¾"	30 lb
No. 5	12"	10"	55 lb	1′ - 11¼"	1′ - 1¾"	1⅜"	2"	⅛"	1¾"	60 lb
No. 6	12"	10"	70 lb	2′ - 6½"	1′ - 5½"	1⅜"	2"	⅛"	2"	85 lb

NOTES:

1. Pull box covers shall be marked as follows: "SERVICE" Service circuits between service point and service disconnect; "SPRINKLER-CONTROL" sprinkler control circuits, 50 V or less; "CALTRANS" on all pull boxes, except pull boxes marked "SPRINKLER-CONTROL"; and "TELEPHONE" Telephone service;
   - A) No. 3½ pull box.
     - 1) "SIGNAL" - Traffic signal circuits with or without lighting or sign lighting circuits.
     - 2) "LIGHTING" - Lighting or sign lighting circuits where voltage is under 600 V.
   - B) No. 5, 6, 9 or 9A pull box.
     - 1) "TRAFFIC SIGNAL" - Traffic signal circuits with or without lighting or sign lighting circuits.
     - 2) "LIGHTING" - Lighting or sign lighting circuits where voltage is under 600 V.
     - 3) "LIGHTING-HIGH VOLTAGE" - Lighting or sign lighting circuits where voltage is above 600 V.
     - 4) "IRRIGATION" - Circuits to irrigation controller 120 V or more.
     - 5) "RAMP METER" - Ramp meter circuits.
     - 6) "COUNT STATION" - Count or speed monitor circuits.
     - 7) "COMMUNICATIONS" - Communication circuits.
     - 8) "TOS COMMUNICATIONS" - TOS communication line.
     - 9) "TOS POWER" - TOS power.
     - 10) "TDC POWER" - Telephone demarcation cabinet power.
     - 11) "CCTV" - Closed circuit television circuits.
     - 12) "TMS" - Traffic monitoring station circuits.
     - 13) "CMS" - Changeable message sign circuits.
     - 14) "HAR" - Highway advisory radio circuits.
     - 15) "BOOSTER PUMP" - Booster pump circuit.
2. The nominal dimensions of the opening in which the cover sets shall be the same as the cover dimensions except the length and width dimensions shall be ⅛" greater.
3. Covers and boxes shall be interchangeable with California standard male and female gages. When interchanged with a standard male or female gage, the top surfaces shall be flush within ⅛". Top outside radius of covers and pull boxes shall have a ⅛" radius.
4. Pull box extension may be another pull box as long as the bottom edge of the pull box can fit into the cover opening.
5. All dimensions for the cover for non-traffic pull box are nominal values.

STATE OF CALIFORNIA
DEPARTMENT OF TRANSPORTATION

ELECTRICAL SYSTEMS (NON-TRAFFIC PULL BOX)

NO SCALE

RSP ES-8A DATED JULY 19, 2013 SUPERSEDES RSP ES-8A DATED JANUARY 20, 2012 THAT SUPPLEMENTS THE STANDARD PLANS BOOK DATED 2010.

REVISED STANDARD PLAN RSP ES-8A

2010 REVISED STANDARD PLAN RSP ES-8A

7-15-13

DIST	COUNTY	ROUTE	POST MILES TOTAL PROJECT	SHEET NO.	TOTAL SHEETS
11	SD	8	R25.9/R32.2	65	67

REGISTERED CIVIL ENGINEER 3-03-14 DATE

08-11-14
PLANS APPROVAL DATE

REGISTERED PROFESSIONAL ENGINEER TIMOTHY J. POWELL No. C 61037 Exp. 12-31-14 CIVIL STATE OF CALIFORNIA

THE STATE OF CALIFORNIA OR ITS OFFICERS OR AGENTS SHALL NOT BE RESPONSIBLE FOR THE ACCURACY OR COMPLETENESS OF ELECTRONIC COPIES OF THIS PLAN SHEET.

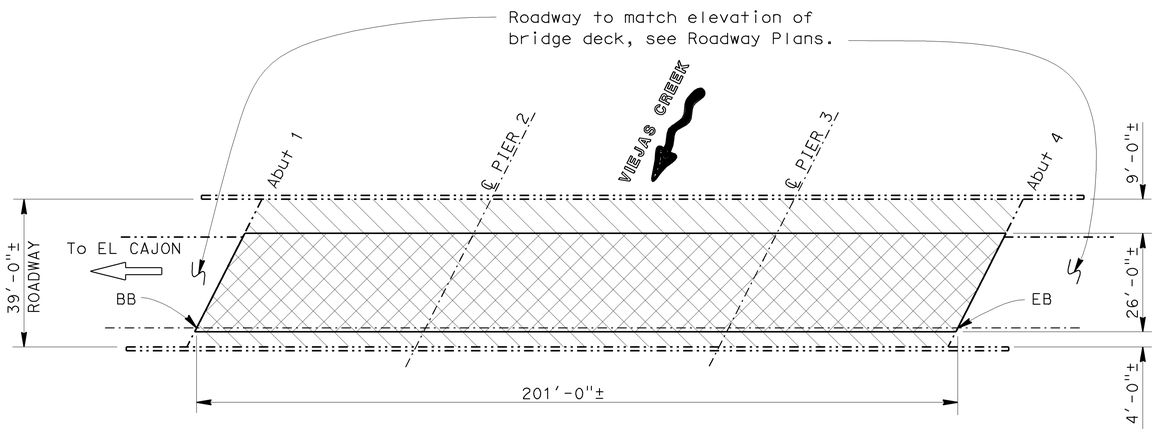

VIEJAS CREEK

BR NO. 57-0019L, SD, RTE 8, PM R31.79
1"=20'

Notes:

Indicates existing structure.

Indicates limits of prepare concrete bridge deck surface and treat bridge deck with high molecular weight methacrylate. See DECK REPAIR DETAIL on "JOINT SEAL AND DECK REPAIR DETAILS" sheet.

Indicates limits of remove existing 1"± AC overlay.

VIEJAS CREEK BRIDGE NO. 57-0019L

QUANTITIES

REMOVE ASPHALT CONCRETE SURFACING	5,226	SQFT
PREPARE CONCRETE BRIDGE DECK SURFACE	7,839	SQFT
TREAT BRIDGE DECK	7,839	SQFT
FURNISH BRIDGE DECK TREATMENT MATERIAL	87	GAL

STANDARD PLANS DATED MAY 2010

SHEET NO.	TITLE
A10A	ABBREVIATIONS (SHEET 1 OF 2)
RSP A10B	ABBREVIATIONS (SHEET 2 OF 2)
B6-21	JOINT SEALS (MAXIMUM MOVEMENT RATING = 2")

INDEX TO PLANS

SHEET NO.	TITLE
1	GENERAL PLAN NO. 1
2	GENERAL PLAN NO. 2
3	JOINT SEAL AND DECK REPAIR DETAILS

Standard Plan Sheet No.

Detail No.

NOTE:
THE CONTRACTOR SHALL VERIFY ALL CONTROLLING FIELD DIMENSIONS BEFORE ORDERING OR FABRICATING ANY MATERIAL.

Michael J. Lee 3-03-14
DESIGN ENGINEER

	BY	CHECKED
DESIGN	John Radu	Timothy Powell
DETAILS	Trung Lam	Timothy Powell
QUANTITIES	John Radu	Timothy Powell
LAYOUT	Trung Lam	John Radu
SPECIFICATIONS	Xiahong Li	Xiahong Li

STATE OF CALIFORNIA
DEPARTMENT OF TRANSPORTATION

DIVISION OF MAINTENANCE
STRUCTURE MAINTENANCE DESIGN

BRIDGE NO. VARIOUS
POST MILE VARIES

ROUTE 8 BRIDGES
GENERAL PLAN NO. 1

STRUCTURES MAINTENANCE GENERAL PLAN & DETAIL SHEET (ENGLISH) (REV. 10/17/07)

ORIGINAL SCALE IN INCHES FOR REDUCED PLANS 0 1 2 3

UNIT: 3488
PROJECT NUMBER & PHASE: 1100020391 1
CONTRACT NUMBER: 11-406901

DISREGARD PRINTS BEARING EARLIER REVISION DATES
REVISION DATES 12-03-13 01-21-14 02-21-14 03-03-14

SHEET 1 OF 3

FILE => 11-406901_01_gp1.dgn

USERNAME => s121289 DATE PLOTTED => 03-MAR-2014 TIME PLOTTED => 13:59

DIST	COUNTY	ROUTE	POST MILES TOTAL PROJECT	SHEET NO.	TOTAL SHEETS
11	SD	8	R25.9/R32.2	66	67

REGISTERED CIVIL ENGINEER 3-03-14 DATE

08-11-14
PLANS APPROVAL DATE

REGISTERED PROFESSIONAL ENGINEER TIMOTHY J. POWELL No. C 61037 Exp. 12-31-14 CIVIL STATE OF CALIFORNIA

THE STATE OF CALIFORNIA OR ITS OFFICERS OR AGENTS SHALL NOT BE RESPONSIBLE FOR THE ACCURACY OR COMPLETENESS OF ELECTRONIC COPIES OF THIS PLAN SHEET.

Notes:

Indicates existing structure.

Indicates location of remove existing joint seal and place new joint seal.

Indicates limits of prepare concrete bridge deck surface and treat bridge deck with high molecular weight methacrylate. See DECK REPAIR DETAIL on "JOINT SEAL AND DECK REPAIR DETAILS" sheet.

Indicates limits of remove existing 1"± AC overlay.

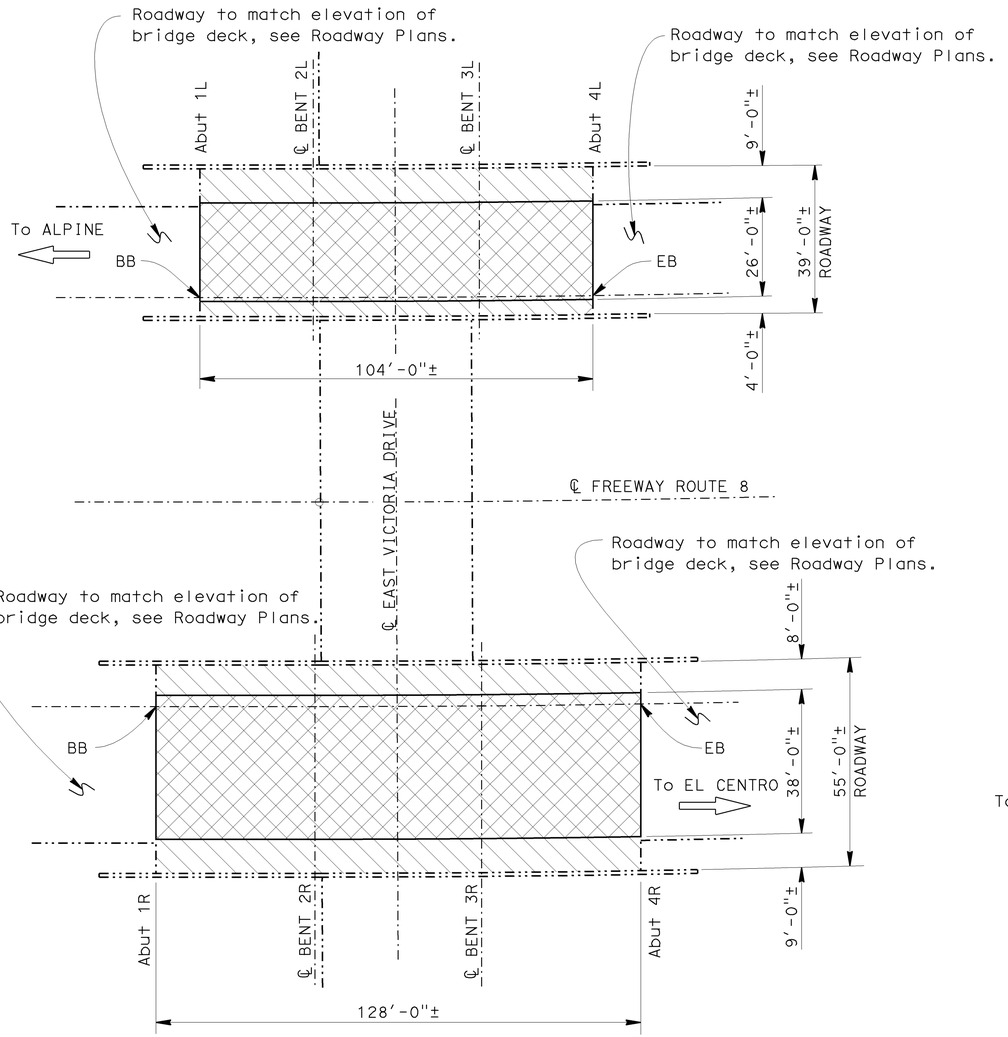

EAST VICTORIA DRIVE UC

BR NO. 57-0600L/R, SD, RTE 8, PM 30.2
1"=20'

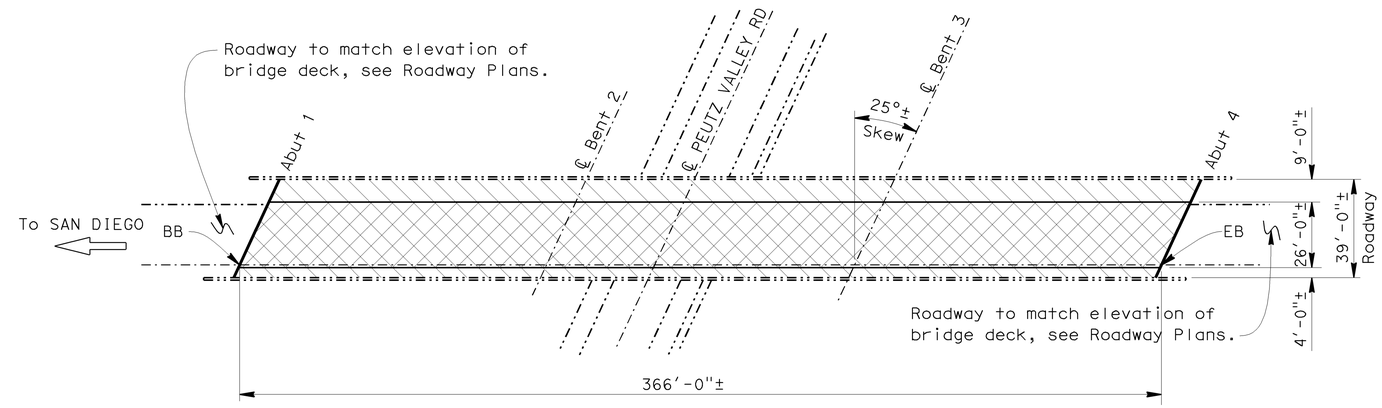

PEUTZ VALLEY ROAD UC

BR NO. 57-0528L, SD, RTE 8, PM R26.73
1"=30'

EAST VICTORIA DRIVE UC BRIDGE NO. 57-0600L/R

QUANTITIES

REMOVE ASPHALT CONCRETE SURFACING	7,568	SQFT
PREPARE CONCRETE BRIDGE DECK SURFACE	11,096	SQFT
TREAT BRIDGE DECK	11,096	SQFT
FURNISH BRIDGE DECK TREATMENT MATERIAL	123	GAL

PEUTZ VALLEY ROAD UC BRIDGE NO. 57-0528L

QUANTITIES

REMOVE ASPHALT CONCRETE SURFACING	9,516	SQFT
PREPARE CONCRETE BRIDGE DECK SURFACE	14,274	SQFT
TREAT BRIDGE DECK	14,274	SQFT
FURNISH BRIDGE DECK TREATMENT MATERIAL	158	GAL
CLEAN EXPANSION JOINT	88	LF
JOINT SEAL (MR 1½")	88	LF

NOTE:
THE CONTRACTOR SHALL VERIFY ALL CONTROLLING FIELD DIMENSIONS BEFORE ORDERING OR FABRICATING ANY MATERIAL.

DESIGN ENGINEER 3-03-14

	BY	CHECKED		BY	CHECKED
DESIGN	John Radu	Timothy Powell	LAYOUT	Trung Lam	John Radu
DETAILS	Trung Lam	Timothy Powell	SPECIFICATIONS	Xiahong Li	PLANS AND SPECIFICATIONS COMPARED Xiahong Li
QUANTITIES	John Radu	Timothy Powell			

STATE OF CALIFORNIA DEPARTMENT OF TRANSPORTATION

DIVISION OF MAINTENANCE STRUCTURE MAINTENANCE DESIGN

BRIDGE NO. VARIOUS
POST MILE VARIES

ROUTE 8 BRIDGES
GENERAL PLAN NO. 2

STRUCTURES MAINTENANCE GENERAL PLAN & DETAIL SHEET (ENGLISH) (REV. 10/17/07)

ORIGINAL SCALE IN INCHES FOR REDUCED PLANS 0 1 2 3

UNIT: 3488
PROJECT NUMBER & PHASE: 1100020391 1 CONTRACT NUMBER: 11-406901

DISREGARD PRINTS BEARING EARLIER REVISION DATES → REVISION DATES 12-03-13 01-21-14 02-21-14 3-03-14

SHEET 2 OF 3

FILE => 11-406901_02_gp2.dgn

USERNAME => s121289 DATE PLOTTED => 03-MAR-2014 TIME PLOTTED => 13:59

DIST	COUNTY	ROUTE	POST MILES TOTAL PROJECT	SHEET NO.	TOTAL SHEETS
11	SD	8	R25.9/R32.2	67	67

REGISTERED CIVIL ENGINEER — DATE 3-03-14

08-11-14
PLANS APPROVAL DATE

REGISTERED PROFESSIONAL ENGINEER — TIMOTHY J. POWELL — No. C 61037 — Exp. 12-31-14 — CIVIL — STATE OF CALIFORNIA

THE STATE OF CALIFORNIA OR ITS OFFICERS OR AGENTS SHALL NOT BE RESPONSIBLE FOR THE ACCURACY OR COMPLETENESS OF ELECTRONIC COPIES OF THIS PLAN SHEET.

JOINT SEAL TABLE

BRIDGE NAME	BRIDGE NUMBER	LOCATION	MINIMUM "MR" (inches)	APPROXIMATE LENGTH (feet)	EXISTING WATERSTOP	APPROX DEPTH TO CLEAN EXPANSION JOINT (inches)
PEUTZ VALLEY ROAD UC	57-0528L	Abut 1	1½	44.0	Yes	12.0
		Abut 4	1½	44.0	Yes	12.0

The following note applies to JOINT SEAL TYPE A:

Install Type A joint seal 3" up into curb or rail on the low side of the deck where joint matches curb or rail joint. For details not shown see B6-21

The following notes apply to JOINT SEAL TYPE B:

1) Seal must satisfy both minimum Movement Rating (MR) and minimum W1 requirements.

2) Minimum W1 is the calculated maximum width of the joint based on field measurements. After the joints have been cleaned, minimum W1 is to be calculated by the Engineer.

3) W1 shall be the smaller of the values determined as follows:

   A) 0.85 times the manufacturer's designed minimum uncompressed width of the seal.

   B) The width of the seal on the third successive test cycle of the pressure deflection test, when compressed to an average pressure of 3 psi.

4) Bend Type B joint seal 6" up into curb or rail on the low side of the deck where deck joint matches curb or rail joint.

5) For details not shown see B6-21

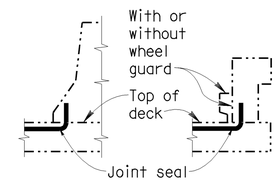

BARRIER RAIL

JOINT SEAL AT LOW SIDE OF DECK

Details shown for illustration purposes only. For use only where deck joint matches the barrier rail joint.
NO SCALE

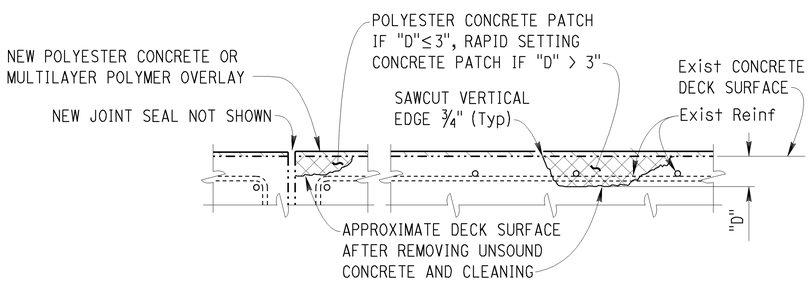

JOINT AND DECK REPAIR DETAIL

LOCATIONS TO BE DETERMINED BY THE ENGINEER.
REINFORCEMENT MAY BE ENCOUNTERED
DURING DECK CONCRETE REMOVAL.
NO SCALE

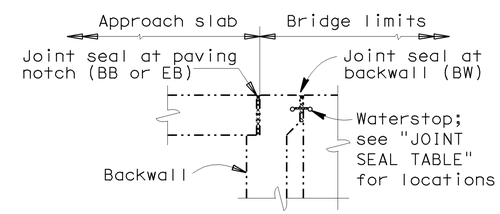

ABUTMENT WITH BACKWALL

JOINT SEAL LOCATION

NO SCALE

NOTE:
THE CONTRACTOR SHALL VERIFY ALL CONTROLLING FIELD DIMENSIONS BEFORE ORDERING OR FABRICATING ANY MATERIAL.

DESIGN	BY John Radu	CHECKED Timothy Powell	
DETAILS	BY Trung Lam	CHECKED Timothy Powell	
QUANTITIES	BY John Radu	CHECKED Timothy Powell	

STATE OF CALIFORNIA
DEPARTMENT OF TRANSPORTATION

DIVISION OF MAINTENANCE
STRUCTURE MAINTENANCE DESIGN

BRIDGE NO. VARIOUS
POST MILE VARIES

ROUTE 8 BRIDGES
JOINT SEAL AND DECK REPAIR DETAILS

STRUCTURES MAINTENANCE GENERAL PLAN & DETAIL SHEET (ENGLISH) (REV. 10/17/07)

ORIGINAL SCALE IN INCHES FOR REDUCED PLANS 0 1 2 3

UNIT: 3488
PROJECT NUMBER & PHASE: 1100020391 1 CONTRACT NUMBER: 11-406901

DISREGARD PRINTS BEARING EARLIER REVISION DATES
REVISION DATES 12-02-13 01-21-14 02-21-14 03-03-14
SHEET 3 OF 3

FILE => 11-406901_03_deck_repair_dets.dgn

USERNAME => s121289 DATE PLOTTED => 03-MAR-2014 TIME PLOTTED => 14:00