Dist	COUNTY	ROUTE	POST MILES TOTAL PROJECT	SHEET No.	TOTAL SHEETS
11	SD	8	R61.2/R77.8	20	71

REGISTERED CIVIL ENGINEER 05-01-14 DATE

09-29-14
PLANS APPROVAL DATE

REGISTERED PROFESSIONAL ENGINEER MARVIN A. CANTON No. C69855 Exp. 09-30-16 CIVIL STATE OF CALIFORNIA

THE STATE OF CALIFORNIA OR ITS OFFICERS OR AGENTS SHALL NOT BE RESPONSIBLE FOR THE ACCURACY OR COMPLETENESS OF SCANNED COPIES OF THIS PLAN SHEET.

1 **REVISED PER ADDENDUM No. 1 DATED DECEMBER 3, 2014**

1

ROADWAY QUANTITIES (TRAVELED WAY AND SHOULDERS)

LOCATIONS / MAIN LANE PM R61.2-R77.8				DIRECTION	LENGTH	TRAVELED WAY WIDTH LF(N)		SHOULDER WIDTH LF (N)				COLD PLANE AC PAVEMENT	TACK COAT	RUBBERIZED HOT MIX ASPHALT (GAP GRADED)	HMA TYPE-A	ASPHALTIC EMULSION (FOG SEAL COAT)	ASPHALT RUBBER BINDER	PRE-COATED SCREENINGS	SHOULDER RUMBLE STRIP (**)	COMMENTS
								INSIDE		OUTSIDE										
ROUTE	STATION BEGIN	STATION END	LINE	EB/WB	LF (N)	BEGIN	END	BEGIN	END	BEGIN	END	SQYD	TON	TON	TON	TON	TON	TON	Sta	
8	3245+41.30	3248+55.00	"A"	EB	313.70	24.0	24.0	5.0	5.0	10.0	10.0	1,359.37	0.34	181.07	90.54	0.09	3.17	24.47	6.28	
	3248+55.00	3254+73.89*	"A"	EB	618.89	61.0	34.0	5.0	5.0	10.0	10.0	4,297.85	1.06	572.48	286.24	0.17	10.00	77.37	12.38	
	3254+73.89*	3255+30.00	"BLVD"	EB	56.11	34.0	32.0	5.0	5.0	10.0	10.0	299.26	0.08	39.87	19.94	0.02	0.70	5.39	1.13	
	3255+30.00	3259+00.00	"BLVD"	EB	370.00	32.0	24.0	10.0	10.0	10.0	10.0	1,973.34	0.49	262.85	131.43	0.14	4.59	35.53	7.40	
	3259+00.00	3271+20.00	"BLVD"	EB	1,220.00	24.0	24.0	10.0	10.0	14.0	14.0	6,506.67	1.60	866.69	433.35	0.54	15.13	117.13	24.40	
	3271+20.00	3292+00.00	"BLVD"	EB	2,080.00	24.0	24.0	10.0	10.0	14.0	12.0	10,862.23	2.67	1,446.85	723.43	0.87	25.26	195.53	41.60	
	3292+00.00	3293+44.90	"BLVD"	EB	144.90	24.0	24.0	10.0	5.0	12.0	10.0	684.26	0.17	91.15	45.58	0.05	1.60	12.32	2.90	
	3293+44.90	3294+80.30	"BLVD"	EB													0.00			Br No. 57-0622R
	3294+80.30	3308+00.00	"BLVD"	EB	1,319.70	24.0	24.0	10.0	10.0	12.0	12.0	6,745.14	1.66	898.46	449.23	0.53	15.69	121.42	26.40	
	3308+00.00	3318+00.00	"BLVD"	EB	1,000.00	24.0	24.0	10.0	10.0	14.0	14.0	5,333.34	1.31	710.41	355.21	0.44	12.41	96.01	20.00	
	3318+00.00	3323+00.00	"BLVD"	EB	500.00	24.0	24.0	5.0	5.0	14.0	14.0	2,388.89	0.59	318.21	159.11	0.18	5.56	43.01	10.00	
	3323+00.00	3341+65.00	"BLVD"	EB	1,865.00	24.0	24.0	10.0	10.0	14.0	14.0	9,946.67	2.44	1,324.90	662.45	0.82	23.13	179.05	37.30	
	3341+65.00	3348+55.00	"BLVD"	EB	690.00	24.0	24.0	6.0	6.0	14.0	14.0	3,373.34	0.83	449.33	224.67	0.26	7.85	60.73	13.80	
	3348+55.00	3348+94.10	"BLVD"	EB	39.10	24.0	24.0	6.0	5.0	14.0	10.0	180.30	0.05	24.02	12.01	0.02	0.42	3.25	0.79	
	3348+94.10	3350+65.90	"BLVD"	EB													0.00			Br No. 57-0588R
	3350+65.90	3351+30.00	"BLVD"	EB	64.10	24.0	24.0	5.0	5.0	10.0	10.0	277.77	0.07	37.00	18.50	0.02	0.65	5.00	1.29	
	3351+30.00	3357+60.00	"BLVD"	EB	630.00	24.0	24.0	5.0	5.0	14.0	14.0	3,010.00	0.74	400.94	200.47	0.22	7.00	54.18	12.60	
	3357+60.00	3359+00.00	"BLVD"	EB	140.00	24.0	24.0	10.0	10.0	14.0	14.0	746.67	0.19	99.46	49.73	0.07	1.74	13.45	2.80	
	3359+00.00	3368+20.00	"BLVD"	EB	920.00	24.0	24.0	10.0	10.0	12.0	12.0	4,702.23	1.16	626.34	313.17	0.37	10.94	84.65	18.40	
	3368+20.00	3369+45.00	"BLVD"	EB	125.00	24.0	24.0	10.0	10.0	12.0	16.0	666.67	0.17	88.81	44.41	0.06	1.56	12.01	2.50	
	3369+45.00	3379+75.00	"BLVD"	EB	1,030.00	24.0	24.0	10.0	10.0	10.0	10.0	5,035.56	1.24	670.74	335.37	0.38	11.71	90.65	20.60	
	3379+75.00	3380+85.00	"BLVD"	EB	110.00	24.0	24.0	10.0	10.0	10.0	16.0	574.45	0.15	76.52	38.26	0.05	1.34	10.35	2.20	
	3380+85.00	3392+65.00	"BLVD"	EB	1,180.00	24.0	24.0	5.0	5.0	16.0	16.0	5,900.00	1.45	785.88	392.94	0.45	13.72	106.20	23.60	
	3392+65.00	3393+30.00	"BLVD"	EB	65.00	24.0	24.0	10.0	10.0	16.0	10.0	339.45	0.09	45.22	22.61	0.03	0.79	6.12	1.30	
	3393+30.00	3401+25.00	"BLVD"	EB	795.00	24.0	24.0	10.0	10.0	10.0	10.0	3,886.67	0.96	517.71	258.86	0.29	9.04	69.97	15.90	
	3401+25.00	3403+60.00	"BLVD"	EB	235.00	24.0	24.0	5.0	5.0	10.0	10.0	1,018.34	0.25	135.65	67.83	0.07	2.37	18.34	4.70	
	3403+60.00	3413+35.00	"BLVD"	EB	975.00	24.0	24.0	5.0	5.0	15.0	15.0	4,766.67	1.17	634.93	317.47	0.36	11.09	85.81	19.50	
	3413+35.00	3417+10.00	"BLVD"	EB	375.00	24.0	24.0	10.0	10.0	17.0	17.0	2,125.00	0.53	283.05	141.53	0.19	4.95	38.25	7.50	
	3417+10.00	3421+45.00	"BLVD"	EB	435.00	24.0	24.0	10.0	10.0	12.0	12.0	2,223.34	0.55	296.15	148.08	0.18	5.17	40.03	8.70	
	3421+45.00	3429+85.00	"BLVD"	EB	840.00	24.0	24.0	5.0	5.0	16.0	16.0	4,200.00	1.03	559.44	279.72	0.33	9.77	75.60	16.80	
	3429+85.00	3436+35.00	"BLVD"	EB	650.00	24.0	24.0	10.0	10.0	16.0	16.0	3,611.12	0.89	481.01	240.51	0.31	8.40	65.01	13.00	
	3436+35.00	3438+70.00	"BLVD"	EB	235.00	24.0	24.0	10.0	10.0	12.0	12.0	1,201.12	0.30	159.99	80.00	0.10	2.80	21.63	4.70	
	3438+70.00	3469+00.00	"BLVD"	EB	3,030.00	24.0	24.0	13.0	13.0	12.0	12.0	16,496.67	4.05	2,197.36	1,098.68	1.38	38.36	296.95	60.60	
	3469+00.00	3474+00.00	"BLVD"	EB	500.00	24.0	67.0	13.0	13.0	12.0	12.0	3,916.67	0.96	521.71	260.86	0.23	9.11	70.51	10.00	
	3474+00.00	3484+10.00	"BLVD"	EB	1,010.00	24.0	24.0	10.0	10.0	10.0	10.0	4,937.78	1.21	657.72	328.86	0.37	11.49	88.89	20.20	
	3484+10.00	3484+87.10	"BLVD"	EB	77.10	24.0	24.0	5.0	5.0	10.0	10.0	334.10	0.09	44.51	22.26	0.03	0.78	6.02	1.55	
	3484+87.10	3487+34.40	"BLVD"	EB													0.00			Br No. 57-0604R
	3487+34.40	3489+00.00	"BLVD"	EB	165.60	24.0	24.0	10.0	10.0	10.0	15.0	855.60	0.21	113.97	56.99	0.07	1.99	15.41	3.32	
	3489+00.00	3494+90.00	"BLVD"	EB	590.00	24.0	24.0	10.0	10.0	15.0	15.0	3,212.23	0.79	427.87	213.94	0.27	7.47	57.83	11.80	
	3494+90.00	3496+55.00	"BLVD"	EB	165.00	24.0	24.0	5.0	5.0	15.0	15.0	806.67	0.20	107.45	53.73	0.06	1.88	14.53	3.30	
	3496+55.00	3505+20.00	"BLVD"	EB	865.00	60.0	24.0	5.0	5.0	10.0	10.0	5,478.34	1.35	729.72	364.86	0.24	12.74	98.62	17.30	
	3505+20.00	3507+85.00	"BLVD"	EB	265.00	24.0	24.0	5.0	5.0	10.0	10.0	1,148.34	0.29	152.96	76.48	0.08	2.67	20.68	5.30	
	3507+85.00	3509+85.00	"BLVD"	EB	200.00	24.0	24.0	8.0	8.0	10.0	15.0	988.89	0.25	131.73	65.87	0.08	2.30	17.81	4.00	
	3509+85.00	3538+40.00	"BLVD"	EB	2,855.00	24.0	24.0	8.0	8.0	15.0	15.0	14,909.45	3.66	1,985.94	992.97	1.20	34.67	268.38	57.10	
	3538+40.00	3549+70.00	"BLVD"	EB	1,130.00	24.0	24.0	5.0	5.0	15.0	15.0	5,524.45	1.36	735.86	367.93	0.42	12.85	99.45	22.60	
	3549+70.00	3561+90.00	"BLVD"	EB	1,220.00	24.0	24.0	5.0	5.0	10.0	10.0	5,286.67	1.30	704.19	352.10	0.34	12.30	95.17	24.40	
	3561+90.00	3565+60.00	"BLVD"	EB	370.00	24.0	24.0	5.0	5.0	15.0	15.0	1,808.89	0.45	240.95	120.48	0.14	4.21	32.57	7.40	
	3565+60.00	3586+92.10	"BLVD"	EB	2,132.10	24.0	24.0	5.0	5.0	10.0	10.0	9,239.10	2.27	1,230.65	615.33	0.59	21.49	166.31	42.65	
				SUBTOTAL 1 EB								173,179.57	42.67	23,067.72	11,533.99	13.11	402.86	3,117.59	671.99	

* SEE TITLE SHEET FOR STATION EQUATION

** HMA, GROUND-IN INDENTATIONS

(N) - NOT A SEPARATE PAY ITEM, FOR INFORMATION ONLY.

SUMMARY OF QUANTITIES
Q-1

REVISED BY | DATE REVISED
JIM ALSHEIKH | MARVIN A. CANTON
CALCULATED-DESIGNED BY | CHECKED BY
FUNCTIONAL SUPERVISOR
KAZIM MAMDANI

STATE OF CALIFORNIA - DEPARTMENT OF TRANSPORTATION
Caltrans PROJECT DEVELOPMENT

LAST REVISION 11-21-14 | DATE PLOTTED => 21-NOV-2014 | TIME PLOTTED => 14:26

Dist	COUNTY	ROUTE	POST MILES TOTAL PROJECT	SHEET No.	TOTAL SHEETS
11	SD	8	R61.2/R77.8	21	71

REGISTERED CIVIL ENGINEER 05-01-14 DATE

09-29-14
PLANS APPROVAL DATE

REGISTERED PROFESSIONAL ENGINEER MARVIN A. CANTON No. C69855 Exp. 09-30-16 CIVIL STATE OF CALIFORNIA

THE STATE OF CALIFORNIA OR ITS OFFICERS OR AGENTS SHALL NOT BE RESPONSIBLE FOR THE ACCURACY OR COMPLETENESS OF SCANNED COPIES OF THIS PLAN SHEET.

1 **REVISED PER ADDENDUM No. 1 DATED DECEMBER 3, 2014**

1

ROADWAY QUANTITIES (TRAVELED WAY AND SHOULDERS)

LOCATIONS / MAIN LANE PM R61.2-R77.8				DIRECTION	LENGTH	TRAVELED WAY WIDTH LF(N)		SHOULDER WIDTH LF (N)				COLD PLANE AC PAVEMENT	TACK COAT	RUBBERIZED HOT MIX ASPHALT (GAP GRADED)	HMA TYPE-A	ASPHALTIC EMULSION (FOG SEAL COAT)	ASPHALT RUBBER BINDER	PRE-COATED SCREENINGS	SHOULDER RUMBLE STRIP (**)	COMMENTS
								INSIDE		OUTSIDE										
ROUTE	STATION BEGIN	STATION END	LINE	EB/WB	LF (N)	BEGIN	END	BEGIN	END	BEGIN	END	SQYD	TON	TON	TON	TON	TON	TON	Sta	
8	3586+92.10	3588+54.40	"BLVD"	EB													0.00			Br No. 57-0589R
	3588+54.40	3588+59.96*	"BLVD"	EB	5.56	24.0	24.0	5.0	5.0	10.0	10.0	24.10	0.01	3.22	1.61	0.01	0.06	0.44	0.12	
	3588+59.97*	3661+10.00	"E"	EB	7,250.03	24.0	24.0	5.0	5.0	10.0	10.0	31,416.80	7.70	4,184.72	2,092.36	1.98	73.05	565.51	145.01	
	3661+10.00	3670+55.00	"E"	EB	945.00	24.0	24.0	10.0	10.0	10.0	10.0	4,620.00	1.14	615.39	307.70	0.35	10.75	83.16	18.90	
	3670+55.00	3672+10.00	"E"	EB	155.00	24.0	24.0	8.0	8.0	10.0	10.0	723.34	0.18	96.35	48.18	0.06	1.69	13.03	3.10	
	3672+10.00	3684+00.00	"E"	EB	1,190.00	24.0	24.0	8.0	8.0	16.0	16.0	6,346.67	1.56	845.38	422.69	0.52	14.76	114.25	23.80	
	3684+00.00	3684+75.00	"E"	EB	75.00	24.0	24.0	8.0	8.0	10.0	10.0	350.00	0.09	46.62	23.31	0.03	0.82	6.30	1.50	
	3684+75.00	3691+25.00	"E"	EB	650.00	24.0	24.0	10.0	10.0	10.0	10.0	3,177.78	0.78	423.29	211.65	0.24	7.39	57.21	13.00	
	3691+25.00	3696+45.00	"E"	EB	520.00	24.0	24.0	5.0	5.0	10.0	10.0	2,253.34	0.56	300.15	150.08	0.15	5.24	40.57	10.40	
	3696+45.00	3704+80.00	"E"	EB	835.00	24.0	24.0	5.0	5.0	15.0	15.0	4,082.23	1.01	543.76	271.88	0.31	9.50	73.49	16.70	
	3704+80.00	3705+85.00	"E"	EB	105.00	24.0	24.0	5.0	5.0	15.0	18.0	530.84	0.14	70.71	35.36	0.05	1.24	9.56	2.10	
	3705+85.00	3719+35.00	"E"	EB	1,350.00	24.0	24.0	5.0	5.0	18.0	18.0	7,050.00	1.73	939.06	469.53	0.57	16.40	126.90	27.00	
	3719+35.00	3738+20.00	"E"	EB	1,885.00	24.0	24.0	5.0	5.0	12.0	12.0	8,587.23	2.11	1,143.82	571.91	0.59	19.97	154.58	37.70	
	3738+20.00	3745+10.00	"E"	EB	690.00	24.0	24.0	5.0	5.0	17.0	17.0	3,526.67	0.87	469.76	234.88	0.28	8.20	63.49	13.80	
	3745+10.00	3751+10.00	"E"	EB	600.00	24.0	24.0	5.0	5.0	15.0	15.0	2,933.34	0.72	390.73	195.37	0.22	6.83	52.81	12.00	
	3751+10.00	3754+30.00	"E"	EB	320.00	24.0	24.0	5.0	5.0	10.0	10.0	1,386.67	0.34	184.71	92.36	0.09	3.23	24.97	6.40	
	3754+30.00	3759+00.00	"E"	EB	470.00	24.0	24.0	5.0	5.0	15.0	15.0	2,297.78	0.57	306.07	153.04	0.18	5.35	41.37	9.40	
	3759+00.00	3775+00.00	"E"	EB	1,600.00	24.0	24.0	5.0	5.0	12.0	12.0	7,288.89	1.79	970.89	485.45	0.50	16.95	131.21	32.00	
	3775+00.00	3791+65.00	"E"	EB	1,665.00	24.0	24.0	5.0	5.0	15.0	15.0	8,140.00	2.00	1,084.25	542.13	0.61	18.93	146.52	33.30	
	3791+65.00	3794+00.00	"E"	EB	235.00	24.0	24.0	5.0	5.0	12.0	12.0	1,070.56	0.27	142.60	71.30	0.08	2.49	19.28	4.70	
	3794+00.00	3802+15.00	"E"	EB	815.00	24.0	24.0	5.0	5.0	15.0	15.0	3,984.45	0.98	530.73	265.37	0.30	9.27	71.73	16.30	
	3802+15.00	3804+90.00	"E"	EB	275.00	24.0	24.0	5.0	5.0	10.0	10.0	1,191.67	0.30	158.74	79.37	0.08	2.78	21.46	5.50	
	3804+90.00	3811+30.00	"E"	EB	640.00	24.0	24.0	8.0	8.0	10.0	10.0	2,986.67	0.74	397.83	198.92	0.21	6.95	53.77	12.80	
	3811+30.00	3818+40.00	"E"	EB	710.00	24.0	24.0	8.0	8.0	15.0	15.0	3,707.78	0.91	493.88	246.94	0.30	8.63	66.75	14.20	
	3818+40.00	3819+20.00	"E"	EB	80.00	24.0	24.0	5.0	5.0	15.0	15.0	391.12	0.10	52.10	26.05	0.03	0.91	7.05	1.60	
	3818+40.00	3821+73.50	"E"	EB	333.50	24.0	24.0	5.0	5.0	10.0	10.0	1,445.17	0.36	192.50	96.25	0.10	3.37	26.02	6.67	
	3821+73.50	3825+02.70	"E"	EB													0.00			Br No. 57-0540R
	3825+02.70	3831+00.00	"E"	EB	597.30	24.0	24.0	5.0	5.0	10.0	10.0	2,588.30	0.64	344.77	172.39	0.17	6.02	46.59	11.95	
	3831+00.00	3837+38.30	"E"	EB	638.30	24.0	24.0	5.0	5.0	13.0	13.0	2,978.74	0.73	396.77	198.39	0.21	6.93	53.62	12.77	
	3837+38.30	3840+63.90	"E"	EB													0.00			Br No. 57-0541R
	3840+63.90	3895+05.00	"E"	EB	5,441.10	24.0	24.0	5.0	5.0	10.0	10.0	23,578.10	5.78	3,140.61	1,570.31	1.49	54.82	424.41	108.83	
	3895+05.00	3900+00.00	"E"	EB	495.00	24.0	24.0	10.0	10.0	10.0	10.0	2,420.00	0.60	322.35	161.18	0.18	5.63	43.56	9.90	
	3900+00.00	3906+30.00	"E"	EB	630.00	24.0	66.0	10.0	10.0	10.0	10.0	4,550.00	1.12	606.06	303.03	0.23	10.58	81.90	12.60	
	3906+30.00	3910+32.70	"E"	EB	402.70	24.0	24.0	10.0	10.0	10.0	10.0	1,968.76	0.49	262.24	131.12	0.15	4.58	35.44	8.06	
	3910+32.70	3911+88.90	"E"	EB													0.00			Br No. 57-0542R
	3911+88.90	3916+90.00	"E"	EB	501.10	24.0	24.0	10.0	10.0	10.0	10.0	2,449.83	0.61	326.32	163.16	0.19	5.70	44.10	10.03	
	3916+90.00	3920+45.00	"E"	EB	355.00	52.0	37.0	10.0	10.0	10.0	10.0	2,544.17	0.63	338.89	169.45	0.13	5.92	45.80	7.10	
	3920+45.00	3926+00.00	"E"	EB	555.00	37.0	24.0	5.0	5.0	10.0	10.0	2,805.84	0.69	373.74	186.87	0.16	6.53	50.51	11.10	
	3926+00.00	3959+60.00	"E"	EB	3,360.00	24.0	24.0	5.0	5.0	17.0	17.0	17,173.34	4.21	2,287.49	1,143.75	1.35	39.93	309.13	67.20	
	3959+60.00	3976+80.00	"E"	EB	1,720.00	24.0	24.0	5.0	5.0	15.0	15.0	8,408.89	2.07	1,120.07	560.04	0.63	19.56	151.37	34.40	
	3976+80.00	3991+00.00	"E"	EB	1,420.00	24.0	24.0	5.0	5.0	10.0	10.0	6,153.34	1.51	819.63	409.82	0.39	14.31	110.77	28.40	
	3991+00.00	4030+24.10	"E"	EB	3,924.10	24.0	24.0	5.0	5.0	12.0	12.0	17,876.46	4.38	2,381.15	1,190.58	1.22	41.57	321.78	78.49	
	4030+24.10	4031+59.50	"E"	EB													0.00			Br No. 57-0603R
	4031+59.50	4041+00.00	"E"	EB	940.50	24.0	24.0	5.0	5.0	10.0	10.0	4,075.50	1.00	542.86	271.43	0.26	9.48	73.36	18.81	
	4041+00.00	4047+00.00	"E"	EB	600.00	24.0	55.0	5.0	5.0	10.0	10.0	3,633.34	0.90	483.97	241.99	0.17	8.45	65.41	12.00	
	4047+00.00	4066+00.00	"E"	EB	1,900.00	24.0	24.0	5.0	5.0	10.0	10.0	8,233.34	2.02	1,096.69	548.35	0.52	19.15	148.21	38.00	
	4066+00.00	4074+00.00	"E"	EB	800.00	53.0	24.0	5.0	5.0	10.0	10.0	4,755.56	1.17	633.45	316.73	0.22	11.06	85.61	16.00	
	4074+00.00	4075+10.00	"E"	EB	110.00	24.0	24.0	5.0	5.0	10.0	10.0	476.67	0.12	63.50	31.75	0.03	1.11	8.59	2.20	
	4075+10.00	4092+00.00	"E"	EB	1,690.00	24.0	24.0	10.0	10.0	10.0	10.0	8,262.23	2.03	1,100.53	550.27	0.62	19.21	148.73	33.80	
			SUBTOTAL 2 EB									234,445.51	57.66	31,228.35	15,614.30	16.16	545.30	4,220.32	989.64	

* SEE TITLE SHEET FOR STATION EQUATION

** HMA, GROUND-IN INDENTATIONS

(N) - NOT A SEPARATE PAY ITEM, FOR INFORMATION ONLY.

SUMMARY OF QUANTITIES
Q-2

REVISED BY | DATE REVISED

JIM ALSHEIKH | MARVIN A. CANTON

CALCULATED-DESIGNED BY | CHECKED BY

FUNCTIONAL SUPERVISOR: KAZIM MAMDANI

STATE OF CALIFORNIA - DEPARTMENT OF TRANSPORTATION

Caltrans PROJECT DEVELOPMENT

LAST REVISION 11-21-14 | DATE PLOTTED => 21-NOV-2014 | TIME PLOTTED => 14:26

Dist	COUNTY	ROUTE	POST MILES TOTAL PROJECT	SHEET No.	TOTAL SHEETS
11	SD	8	R61.2/R77.8	22	71

REGISTERED CIVIL ENGINEER 05-01-14 DATE

09-29-14
PLANS APPROVAL DATE

REGISTERED PROFESSIONAL ENGINEER MARVIN A. CANTON No. C69855 Exp. 09-30-16 CIVIL STATE OF CALIFORNIA

THE STATE OF CALIFORNIA OR ITS OFFICERS OR AGENTS SHALL NOT BE RESPONSIBLE FOR THE ACCURACY OR COMPLETENESS OF SCANNED COPIES OF THIS PLAN SHEET.

1 REVISED PER ADDENDUM No. 1 DATED DECEMBER 3, 2014

1

ROADWAY QUANTITIES (TRAVELED WAY AND SHOULDERS)

LOCATIONS / MAIN LANE PM R61.2-R77.8				DIRECTION	LENGTH	TRAVELED WAY WIDTH LF(N)		SHOULDER WIDTH LF (N)				COLD PLANE AC PAVEMENT	TACK COAT	RUBBERIZED HOT MIX ASPHALT (GAP GRADED)	HMA TYPE-A	ASPHALTIC EMULSION (FOG SEAL COAT)	ASPHALT RUBBER BINDER	PRE-COATED SCREENINGS	SHOULDER RUMBLE STRIP (**)	COMMENTS
								INSIDE		OUTSIDE										
ROUTE	STATION BEGIN	STATION END	LINE	EB/WB	LF (N)	BEGIN	END	BEGIN	END	BEGIN	END	SQYD	TON	TON	TON	TON	TON	TON	Sta	
8	4092+00.00	4095+15.00	"E"	EB	315.00	24.0	45.0	10.0	10.0	10.0	10.0	1,907.50	0.47	254.08	127.04	0.12	4.44	34.34	6.30	
	4095+15.00	4097+10.00	"E"	EB	195.00	45.0	62.0	5.0	5.0	10.0	10.0	1,484.17	0.37	197.70	98.85	0.06	3.46	26.72	3.90	
	4097+10.00	4103+17.80	"E"	EB	607.80	24.0	24.0	5.0	5.0	10.0	10.0	2,633.80	0.65	350.83	175.42	0.17	6.13	47.41	12.16	
	4103+17.80	4104+81.90	"E"	EB													0.00			Br No. 57-0543R
	4104+81.90	4112+65.00	"E"	EB	783.10	24.0	24.0	5.0	5.0	10.0	10.0	2,958.38	0.84	582.40	197.03	0.22	6.88	53.26	15.67	
SUBTOTAL 3 EB												8,983.85	2.33	1,385.01	598.34	0.57	20.91	161.73	38.03	
RAMP LOCATIONS																				
OFF-RAMP	3474+00.00	3487+00.00	"BLVD"	EB	1,300.00	12.0	12.0	2.0	2.0	8.0	8.0	3,177.78	0.78	423.29		0.24				AT RIBBONWOOD Rd
OFF-RAMP	3487+00.00	3489+10.00	"BLVD"	EB	210.00	12.0	90.0	2.0	2.0	8.0	8.0	1,423.34	0.35	189.59		0.04				AT RIBBONWOOD Rd
ON-RAMP	3487+70.00	3495+00.00	"BLVD"	EB	730.00	12.0	12.0	2.0	2.0	8.0	8.0	1,784.45	0.44	237.69		0.14				AT RIBBONWOOD Rd
ON-RAMP	3495+00.00	3496+60.00	"BLVD"	EB	160.00	12.0	90.0	2.0	2.0	8.0	8.0	1,084.45	0.27	144.45		0.03				AT RIBBONWOOD Rd
ON-RAMP	3906+35.00	3910+00.00	"E"	EB	365.00	12.0	12.0	2.0	2.0	8.0	8.0	892.23	0.22	118.85		0.07				AT CARRIZO GORGE Rd
ON-RAMP	3910+00.00	3910+90.00	"E"	EB	90.00	12.0	36.0	2.0	2.0	8.0	8.0	340.00	0.09	45.29		0.02				AT CARRIZO GORGE Rd
OFF-RAMP	3911+30.00	3916+80.00	"E"	EB	550.00	12.0	12.0	2.0	2.0	8.0	8.0	1,344.45	0.33	179.09		0.10				AT CARRIZO GORGE Rd
OFF-RAMP	3916+80.00	3917+90.00	"E"	EB	110.00	12.0	40.0	2.0	2.0	8.0	8.0	440.00	0.11	58.61		0.02				AT CARRIZO GORGE Rd
OFF-RAMP	4047+00.00	4057+00.00	"E"	EB	1,000.00	12.0	12.0	2.0	2.0	8.0	8.0	2,444.45	0.60	325.61		0.19				TRUCK REST AREA
OFF-RAMP	4057+00.00	4058+40.00	"E"	EB	140.00	12.0	76.0	2.0	2.0	8.0	8.0	840.70	0.21	111.99		0.03				TRUCK REST AREA
ON-RAMP	4058+40.00	4060+30.00	"E"	EB	190.00	76.0	75.0	2.0	2.0	8.0	8.0	1,808.73	0.45	240.93		0.04				TRUCK REST AREA
ON-RAMP	4060+30.00	4061+20.00	"E"	EB	90.00	75.0	12.0	2.0	2.0	8.0	8.0	536.32	0.14	71.44		0.02				TRUCK REST AREA
ON-RAMP	4061+20.00	4066+00.00	"E"	EB	480.00	12.0	12.0	2.0	2.0	8.0	8.0	1,173.34	0.29	156.29		0.09				TRUCK REST AREA
OFF-RAMP	4104+30.00	4112+30.00	"E"	EB	800.00	12.0	12.0	2.0	2.0	8.0	8.0	1,955.56	0.48	260.49		0.15				AT IN-KO-PAH PARK Rd
SUBTOTAL 4 EB												19,245.80	4.76	2563.61		1.18				
SUBTOTAL 3 EB												8,983.85	2.33	1,385.01	598.34	0.57	20.91	161.73	38.03	
SUBTOTAL 1 EB												173,179.57	42.67	23,067.72	11,533.99	13.11	402.86	3,117.59	671.99	
SUBTOTAL 2 EB												234,445.51	57.66	31,228.35	15,614.30	16.16	545.30	4,220.32	989.64	
TOTAL EB												435,854.73	107.42	58,244.69	27,746.63	31.02	969.07	7,499.64	1,699.66	

* SEE TITLE SHEET FOR STATION EQUATION

** HMA, GROUND-IN INDENTATIONS

(N) - NOT A SEPARATE PAY ITEM, FOR INFORMATION ONLY.

SUMMARY OF QUANTITIES

Q-3

REVISED BY | DATE REVISED

JIM ALSHEIKH | MARVIN A. CANTON

CALCULATED-DESIGNED BY | CHECKED BY

FUNCTIONAL SUPERVISOR | KAZIM MAMDANI

STATE OF CALIFORNIA - DEPARTMENT OF TRANSPORTATION

Caltrans PROJECT DEVELOPMENT

LAST REVISION 11-21-14 | DATE PLOTTED => 21-NOV-2014 | TIME PLOTTED => 14:26

Dist	COUNTY	ROUTE	POST MILES TOTAL PROJECT	SHEET No.	TOTAL SHEETS
11	SD	8	R61.2/R77.8	23	71

REGISTERED CIVIL ENGINEER 05-01-14 DATE

09-29-14
PLANS APPROVAL DATE

REGISTERED PROFESSIONAL ENGINEER MARVIN A. CANTON No. C69855 Exp. 09-30-16 CIVIL STATE OF CALIFORNIA

THE STATE OF CALIFORNIA OR ITS OFFICERS OR AGENTS SHALL NOT BE RESPONSIBLE FOR THE ACCURACY OR COMPLETENESS OF SCANNED COPIES OF THIS PLAN SHEET.

1 REVISED PER ADDENDUM No. 1 DATED DECEMBER 3, 2014

1

ROADWAY QUANTITIES (TRAVELED WAY AND SHOULDERS)

LOCATIONS / MAIN LANE PM R61.2-R77.8				DIRECTION	LENGTH	TRAVELED WAY WIDTH LF(N)		SHOULDER WIDTH LF (N)				COLD PLANE AC PAVEMENT	TACK COAT	RUBBERIZED HOT MIX ASPHALT (GAP GRADED)	HMA TYPE-A	ASPHALTIC EMULSION (FOG SEAL COAT)	ASPHALT RUBBER BINDER	PRE-COATED SCREENINGS	SHOULDER RUMBLE STRIP (**)	COMMENTS
ROUTE	STATION		LINE					INSIDE		OUTSIDE										
	BEGIN	END		EB/WB	LF (N)	BEGIN	END	BEGIN	END	BEGIN	END	SQYD	TON	TON	TON	TON	TON	TON	Sta	
8	3253+95.00	3257+65.00	"AL"	WB	370.00	24.0	24.0	10.0	10.0	10.0	10.0	1,808.89	0.45	240.95	120.48	0.14	4.21	32.57	7.40	
	3257+65.00	3257+94.45*	"AL"	WB	29.45	24.0	24.0	10.0	10.0	17.0	17.0	166.89	0.05	22.23	11.12	0.02	0.39	3.01	0.59	
	3254+73.89*	3266+61.00	"BLVD"	WB	1,187.11	24.0	24.0	10.0	10.0	17.0	17.0	6,726.96	1.65	896.04	448.02	0.59	15.65	121.09	23.75	
	3266+61.00	3293+35.00	"BLVD"	WB	2,675.00	24.0	24.0	10.0	10.0	13.0	13.0	13,964.23	3.43	1,860.04	930.02	1.12	32.47	251.36	53.48	
	3293+35.00	3294+71.20	"BLVD"	WB													0.00			Br No. 57-0622L
	3294+71.20	3308+25.00	"BLVD"	WB	1,353.80	24.0	24.0	12.0	12.0	13.0	13.0	7,370.69	1.81	981.78	490.89	0.62	17.14	132.68	27.08	
	3308+25.00	3323+20.00	"BLVD"	WB	1,495.00	24.0	24.0	5.0	5.0	13.0	13.0	6,976.67	1.71	929.30	464.65	0.49	16.23	125.59	29.90	
	3323+20.00	3341+60.00	"BLVD"	WB	1,840.00	24.0	24.0	10.0	10.0	13.0	13.0	9,608.89	2.36	1,279.91	639.96	0.77	22.35	172.97	36.80	
	3341+60.00	3349+00.00	"BLVD"	WB	740.00	24.0	24.0	5.0	5.0	16.0	16.0	3,700.00	0.91	492.84	246.42	0.29	8.61	66.60	14.80	
	3349+00.00	3349+60.80	"BLVD"	WB	60.80	24.0	24.0	5.0	5.0	12.0	12.0	276.98	0.07	36.90	18.45	0.02	0.65	4.99	1.22	
	3349+60.80	3351+28.60	"BLVD"	WB													0.00			Br No. 57-0588L
	3351+28.60	3352+00.00	"BLVD"	WB	71.40	24.0	24.0	5.0	5.0	10.0	10.0	309.41	0.08	41.22	20.61	0.02	0.72	5.57	1.43	
	3352+00.00	3355+10.00	"BLVD"	WB	310.00	24.0	24.0	10.0	10.0	16.0	16.0	1,722.23	0.43	229.41	114.71	0.15	4.01	31.01	6.20	
	3355+10.00	3368+60.00	"BLVD"	WB	1,350.00	24.0	24.0	10.0	10.0	12.0	12.0	6,900.00	1.70	919.08	459.54	0.54	16.05	124.20	27.00	
	3368+60.00	3371+65.00	"BLVD"	WB	305.00	24.0	24.0	10.0	10.0	18.0	18.0	1,762.23	0.44	234.73	117.37	0.16	4.10	31.73	6.10	
	3371+65.00	3380+65.00	"BLVD"	WB	900.00	24.0	24.0	10.0	10.0	12.0	12.0	4,600.00	1.13	612.72	306.36	0.36	10.70	82.80	18.00	
	3380+65.00	3393+30.00	"BLVD"	WB	1,265.00	24.0	24.0	5.0	5.0	12.0	12.0	5,762.78	1.42	767.61	383.81	0.40	13.40	103.74	25.30	
	3393+30.00	3395+45.00	"BLVD"	WB	215.00	24.0	24.0	10.0	10.0	20.0	20.0	1,290.00	0.32	171.83	85.92	0.12	3.00	23.22	4.30	
	3395+45.00	3397+00.00	"BLVD"	WB	155.00	24.0	24.0	10.0	10.0	15.0	15.0	843.89	0.21	112.41	56.21	0.08	1.97	15.20	3.10	
	3397+00.00	3398+00.00	"BLVD"	WB	100.00	24.0	24.0	10.0	5.0	15.0	15.0	516.67	0.13	68.83	34.42	0.05	1.21	9.31	2.00	
	3398+00.00	3413+85.00	"BLVD"	WB	1,585.00	24.0	24.0	5.0	5.0	15.0	15.0	7,748.89	1.90	1,032.16	516.08	0.58	18.02	139.49	31.70	
	3413+85.00	3421+10.00	"BLVD"	WB	725.00	24.0	24.0	10.0	10.0	15.0	15.0	3,947.23	0.97	525.78	262.89	0.33	9.18	71.06	14.50	
	3421+10.00	3435+75.00	"BLVD"	WB	1,465.00	24.0	24.0	5.0	5.0	17.0	17.0	7,487.78	1.84	997.38	498.69	0.59	17.41	134.79	29.30	
	3435+75.00	3467+00.00	"BLVD"	WB	3,125.00	24.0	24.0	12.0	12.0	17.0	17.0	18,402.78	4.51	2,451.26	1,225.63	1.65	42.79	331.26	62.50	
	3467+00.00	3473+50.00	"BLVD"	WB	650.00	24.0	61.0	12.0	12.0	17.0	17.0	5,163.89	1.27	687.84	343.92	0.35	12.01	92.96	13.00	
	3473+50.00	3483+56.50	"BLVD"	WB	1,006.50	24.0	24.0	12.0	12.0	15.0	15.0	5,703.50	1.40	759.71	379.86	0.50	13.27	102.67	20.13	
	3483+56.50	3486+12.30	"BLVD"	WB													0.00			Br No. 57-0604L
	3486+12.30	3498+90.00	"BLVD"	WB	1,277.70	24.0	24.0	5.0	5.0	16.0	16.0	6,388.51	1.57	850.95	425.48	0.49	14.86	115.00	25.56	
	3498+90.00	3504+00.00	"BLVD"	WB	510.00	65.0	24.0	5.0	5.0	10.0	10.0	3,371.67	0.83	449.11	224.56	0.14	7.84	60.70	10.20	
	3504+00.00	3508+30.00	"BLVD"	WB	430.00	24.0	24.0	5.0	5.0	14.0	14.0	2,054.45	0.51	273.66	136.83	0.15	4.78	36.99	8.60	
	3508+30.00	3583+85.00	"BLVD"	WB	7,555.00	24.0	24.0	5.0	5.0	15.0	15.0	36,935.56	9.05	4,919.82	2,459.91	2.75	85.88	664.85	151.10	
	3583+85.00	3586+43.30	"BLVD"	WB	258.30	24.0	24.0	5.0	5.0	10.0	10.0	1,119.30	0.28	149.10	74.55	0.08	2.61	20.15	5.17	
	3586+43.30	3588+18.10	"BLVD"	WB													0.00			Br No. 57-0589L
	3588+18.10	3588+59.96*	"BLVD"	WB	41.86	24.0	24.0	5.0	5.0	13.0	13.0	195.35	0.05	26.03	13.02	0.02	0.46	3.52	0.84	
	3588+59.97*	3696+60.00	"G"	WB	10,800.03	24.0	24.0	5.0	5.0	13.0	13.0	50,400.15	12.35	6,713.30	3,356.65	3.53	117.19	907.21	216.01	
	3696+60.00	3698+30.00	"G"	WB	170.00	24.0	24.0	10.0	10.0	13.0	13.0	887.78	0.22	118.26	59.13	0.08	2.07	15.99	3.40	
	3698+30.00	3707+60.00	"G"	WB	930.00	24.0	24.0	10.0	10.0	10.0	10.0	4,546.67	1.12	605.62	302.81	0.34	10.58	81.85	18.60	
	3707+60.00	3719+00.00	"G"	WB	1,140.00	24.0	24.0	5.0	5.0	10.0	10.0	4,940.00	1.22	658.01	329.01	0.32	11.49	88.92	22.80	
	3719+00.00	3733+80.00	"G"	WB	1,480.00	24.0	24.0	5.0	5.0	13.0	13.0	6,906.67	1.70	919.97	459.99	0.49	16.06	124.33	29.60	
	3733+80.00	3749+60.00	"G"	WB	1,580.00	24.0	24.0	5.0	5.0	10.0	10.0	6,846.67	1.68	911.98	455.99	0.44	15.92	123.25	31.60	
	3749+60.00	3769+15.00	"G"	WB	1,955.00	24.0	24.0	8.0	8.0	10.0	10.0	9,123.34	2.24	1,215.23	607.62	0.64	21.22	164.23	39.10	
	3769+15.00	3769+75.00	"G"	WB	60.00	24.0	24.0	8.0	8.0	12.0	12.0	293.34	0.08	39.08	19.54	0.03	0.69	5.29	1.20	
	3769+75.00	3812+00.00	"G"	WB	4,225.00	24.0	24.0	5.0	5.0	12.0	12.0	19,247.23	4.72	2,563.74	1,281.87	1.31	44.75	346.46	84.50	
	3812+00.00	3817+35.00	"G"	WB	535.00	24.0	24.0	5.0	5.0	15.0	15.0	2,615.56	0.65	348.40	174.20	0.20	6.09	47.09	10.70	
	3817+35.00	3821+03.90	"G"	WB	368.90	24.0	24.0	5.0	5.0	12.0	12.0	1,680.55	0.42	223.85	111.93	0.12	3.91	30.25	7.38	
	3821+03.90	3824+33.30	"G"	WB													0.00			Br No. 57-0540L
	3824+33.30	3836+08.00	"G"	WB	1,174.70	24.0	24.0	5.0	5.0	12.0	12.0	5,351.42	1.32	712.81	356.41	0.37	12.45	96.33	23.50	
	3836+08.00	3839+08.50	"G"	WB													0.00			Br No. 57-0541L
	3839+08.50	3840+20.00	"G"	WB	111.50	24.0	24.0	5.0	5.0	13.0	13.0	520.34	0.13	69.31	34.66	0.04	1.21	9.37	2.23	
									SUBTOTAL 1		WB	286,186.04	70.33	38,120.19	19,060.19	21.48	665.60	5,151.65	1,151.67	

* SEE TITLE SHEET FOR STATION EQUATION

** HMA, GROUND-IN INDENTATIONS

(N) - NOT A SEPARATE PAY ITEM, FOR INFORMATION ONLY.

SUMMARY OF QUANTITIES
Q-4

STATE OF CALIFORNIA - DEPARTMENT OF TRANSPORTATION
Caltrans PROJECT DEVELOPMENT

FUNCTIONAL SUPERVISOR: KAZIM MAMDANI
CALCULATED-DESIGNED BY: JIM ALSHEIKH
CHECKED BY: MARVIN A. CANTON
REVISED BY / DATE REVISED

LAST REVISION 11-21-14
DATE PLOTTED => 21-NOV-2014
TIME PLOTTED => 14:26

Dist	COUNTY	ROUTE	POST MILES TOTAL PROJECT	SHEET No.	TOTAL SHEETS
11	SD	8	R61.2/R77.8	24	71

REGISTERED CIVIL ENGINEER 05-01-14 DATE

09-29-14
PLANS APPROVAL DATE

REGISTERED PROFESSIONAL ENGINEER MARVIN A. CANTON No. C69855 Exp. 09-30-16 CIVIL STATE OF CALIFORNIA

THE STATE OF CALIFORNIA OR ITS OFFICERS OR AGENTS SHALL NOT BE RESPONSIBLE FOR THE ACCURACY OR COMPLETENESS OF SCANNED COPIES OF THIS PLAN SHEET.

1 REVISED PER ADDENDUM No. 1 DATED DECEMBER 3, 2014

1

ROADWAY QUANTITIES (TRAVELED WAY AND SHOULDERS)

LOCATIONS / MAIN LANE PM R61.2-R77.8 ROUTE	STATION BEGIN	STATION END	LINE	DIRECTION EB/WB	LENGTH LF (N)	TRAVELED WAY WIDTH LF(N) BEGIN	TRAVELED WAY WIDTH LF(N) END	SHOULDER WIDTH LF (N) INSIDE BEGIN	SHOULDER WIDTH LF (N) INSIDE END	SHOULDER WIDTH LF (N) OUTSIDE BEGIN	SHOULDER WIDTH LF (N) OUTSIDE END	COLD PLANE AC PAVEMENT SQYD	TACK COAT TON	RUBBERIZED HOT MIX ASPHALT (GAP GRADED) TON	HMA TYPE-A TON	ASPHALTIC EMULSION (FOG SEAL COAT) TON	ASPHALT RUBBER BINDER TON	PRE-COATED SCREENINGS TON	SHOULDER RUMBLE STRIP (**) Sta	COMMENTS
8	3840+20.00	3848+00.00	"G"	WB	780.00	24.0	24.0	5.0	5.0	10.0	10.0	3,380.00	0.83	450.22	225.11	0.22	7.86	60.84	15.60	
	3848+00.00	3866+10.00	"G"	WB	1,810.00	24.0	24.0	5.0	5.0	12.0	12.0	8,245.56	2.03	1,098.31	549.16	0.56	19.18	148.43	36.20	
	3866+10.00	3867+20.00	"G"	WB	110.00	24.0	24.0	8.0	8.0	12.0	12.0	537.78	0.14	71.64	35.82	0.04	1.26	9.69	2.20	
	3867+20.00	3871+90.00	"G"	WB	470.00	24.0	24.0	8.0	8.0	10.0	10.0	2,193.34	0.54	292.16	146.08	0.16	5.10	39.49	9.40	
	3871+90.00	3876+30.00	"G"	WB	440.00	24.0	24.0	5.0	5.0	10.0	10.0	1,906.67	0.47	253.97	126.99	0.12	4.44	34.33	8.80	
	3876+30.00	3877+75.00	"G"	WB	145.00	24.0	24.0	8.0	8.0	10.0	10.0	676.67	0.17	90.14	45.07	0.05	1.58	12.19	2.90	
	3877+75.00	3896+50.00	"G"	WB	1,875.00	24.0	24.0	5.0	5.0	12.0	12.0	8,541.67	2.10	1,137.76	568.88	0.58	19.86	153.76	37.50	
	3896+50.00	3905+20.00	"G"	WB	870.00	24.0	52.0	5.0	5.0	12.0	12.0	5,316.67	1.31	708.19	354.10	0.27	12.37	95.71	17.40	
	3905+20.00	3910+00.80	"G"	WB	480.80	24.0	24.0	5.0	5.0	13.0	13.0	2,243.74	0.55	298.87	149.44	0.16	5.22	40.39	9.62	
	3910+00.80	3911+60.20	"G"	WB													0.00			Br No. 57-0542L
	3911+60.20	3919+20.00	"G"	WB	759.80	24.0	24.0	5.0	5.0	13.0	13.0	3,545.74	0.87	472.30	236.15	0.25	8.25	63.83	15.20	
	3919+20.00	3925+05.00	"G"	WB	585.00	60.0	24.0	5.0	5.0	10.0	10.0	3,705.00	0.91	493.51	246.76	0.16	8.62	66.69	11.70	
	3925+05.00	3926+75.00	"G"	WB	170.00	24.0	24.0	5.0	5.0	10.0	10.0	736.67	0.19	98.13	49.07	0.05	1.72	13.27	3.40	
	3926+75.00	3946+50.00	"G"	WB	1,975.00	24.0	24.0	5.0	5.0	12.0	12.0	8,997.23	2.21	1,198.44	599.22	0.61	20.92	161.96	39.50	
	3946+50.00	3959+20.00	"G"	WB	1,270.00	24.0	24.0	5.0	5.0	13.0	13.0	5,926.67	1.46	789.44	394.72	0.42	13.78	106.69	25.40	
	3959+20.00	3985+60.00	"G"	WB	2,640.00	24.0	24.0	5.0	5.0	15.0	15.0	12,906.67	3.17	1,719.17	859.59	0.96	30.01	232.33	52.80	
	3985+60.00	3991+80.00	"G"	WB	620.00	24.0	24.0	5.0	5.0	10.0	10.0	2,686.67	0.66	357.87	178.94	0.17	6.25	48.37	12.40	
	3991+80.00	4012+75.00	"G"	WB	2,095.00	24.0	24.0	5.0	5.0	13.0	13.0	9,776.67	2.40	1,302.26	651.13	0.69	22.74	175.99	41.90	
	4012+75.00	4029+45.90	"G"	WB	1,670.90	24.0	24.0	5.0	5.0	15.0	15.0	8,168.85	2.01	1,088.10	544.05	0.61	19.00	147.04	33.42	
	4029+45.90	4030+82.70	"G"	WB													0.00			Br No. 57-0603L
	4030+82.70	4043+80.00	"G"	WB	1,297.30	24.0	24.0	5.0	5.0	13.0	13.0	6,054.07	1.49	806.41	403.21	0.43	14.08	108.98	25.95	
	4043+80.00	4046+05.00	"G"	WB	225.00	24.0	55.0	5.0	5.0	15.0	15.0	1,487.50	0.37	198.14	99.07	0.09	3.46	26.78	4.50	
	4046+05.00	4069+90.00	"G"	WB	2,385.00	24.0	24.0	5.0	5.0	13.0	13.0	11,130.00	2.73	1,482.52	741.26	0.78	25.88	200.34	47.70	
	4069+90.00	4101+40.10	"G"	WB	3,150.10	24.0	24.0	5.0	5.0	14.0	14.0	15,050.48	3.69	2,004.73	1,002.37	1.09	35.00	270.91	63.01	
	4101+40.10	4103+03.80	"G"	WB													0.00			Br No. 57-0543L
	4103+03.80	4110+90.00	"G"	WB	786.20	24.0	24.0	5.0	5.0	10.0	10.0	2,970.09	0.84	584.70	197.81	0.22	6.91	53.47	15.73	
											SUBTOTAL 2 WB	126,184.41	31.14	16,996.98	8,404.00	8.69	293.49	2,271.48	532.23	
RAMP LOCATION																				
ON-RAMP	3473+50.00	3481+00.00	"BLVD"	WB	750.00	12.0	12.0	2.0	2.0	8.0	8.0	1,833.34	0.45	244.21		0.14				AT RIBBONWOOD Rd
ON-RAMP	3481+00.00	3483+40.00	"BLVD"	WB	240.00	12.0	50.0	2.0	2.0	8.0	8.0	1,093.34	0.27	145.64		0.05				AT RIBBONWOOD Rd
OFF-RAMP	3483+20.00	3497+00.00	"BLVD"	WB	1,380.00	12.0	12.0	2.0	2.0	8.0	8.0	3,373.34	0.83	449.33		0.26				AT RIBBONWOOD Rd
OFF-RAMP	3497+00.00	3498+90.00	"BLVD"	WB	190.00	12.0	80.0	2.0	2.0	8.0	8.0	1,182.23	0.29	157.48		0.04				AT RIBBONWOOD Rd
OFF-RAMP	3905+20.00	3910+30.00	"G"	WB	510.00	12.0	12.0	2.0	2.0	8.0	8.0	1,246.67	0.31	166.06		0.10				AT CARRIZO GORGE Rd
OFF-RAMP	3910+30.00	3910+60.00	"G"	WB	30.00	12.0	50.0	2.0	2.0	8.0	8.0	136.67	0.04	18.21		0.01				AT CARRIZO GORGE Rd
OFF-RAMP	3911+10.00	3911+30.00	"G"	WB	20.00	50.0	12.0	2.0	2.0	8.0	8.0	91.12	0.03	12.14		0.01				AT CARRIZO GORGE Rd
OFF-RAMP	3911+30.00	3919+10.00	"G"	WB	780.00	12.0	12.0	2.0	2.0	8.0	8.0	1,906.67	0.47	253.97		0.15				AT CARRIZO GORGE Rd
											SUBTOTAL 3 WB	10,863.38	2.69	1,447.04		0.76				
											SUBTOTAL 2 WB	126,184.41	29.88	16,996.98	8,404.00	8.69	293.49	2,271.48	532.23	
											SUBTOTAL 1 WB	286,186.04	70.33	38,120.19	19,060.19	21.48	665.60	5,151.65	1,151.67	
											TOTAL WB	423,233.83	104.16	56,564.21	27,464.19	30.93	959.09	7,423.13	1,683.90	
											TOTAL EB	435,854.73	107.42	58,244.69	27,746.63	31.02	969.07	7,499.64	1,699.66	
											OVERSIDE DRAIN					***2.11				
											ASPHALT DIKE					***6.60				
											TOTAL	859,088.56	211.58	114,808.90	55,210.82	70.66	1,928.16	14,922.77	3,383.56	

* SEE TITLE SHEET FOR STATION EQUATION

** HMA, GROUND-IN INDENTATIONS

*** SEE "REPLACE ASPHALT DIKE (MAINLANES)" & "OVERSIDE DRAIN" FOR ADDITIONAL QUANTITIES.

(N) - NOT A SEPARATE PAY ITEM, FOR INFORMATION ONLY.

SUMMARY OF QUANTITIES
Q-5

REVISED BY | DATE REVISED

JIM ALSHEIKH | MARVIN A. CANTON

CALCULATED-DESIGNED BY | CHECKED BY

FUNCTIONAL SUPERVISOR: KAZIM MAMDANI

STATE OF CALIFORNIA - DEPARTMENT OF TRANSPORTATION

Caltrans PROJECT DEVELOPMENT

LAST REVISION 11-21-14 | DATE PLOTTED => 21-NOV-2014 | TIME PLOTTED => 14:26

Dist	COUNTY	ROUTE	POST MILES TOTAL PROJECT	SHEET No.	TOTAL SHEETS
11	SD	8	R61.2/R77.8	53A	71

Randell D. Hiatt
REGISTERED CIVIL ENGINEER

November 15, 2013
PLANS APPROVAL DATE

REGISTERED PROFESSIONAL ENGINEER
Randell D. Hiatt
No. C50200
Exp. 6-30-15
CIVIL
STATE OF CALIFORNIA

THE STATE OF CALIFORNIA OR ITS OFFICERS OR AGENTS SHALL NOT BE RESPONSIBLE FOR THE ACCURACY OR COMPLETENESS OF SCANNED COPIES OF THIS PLAN SHEET.

1

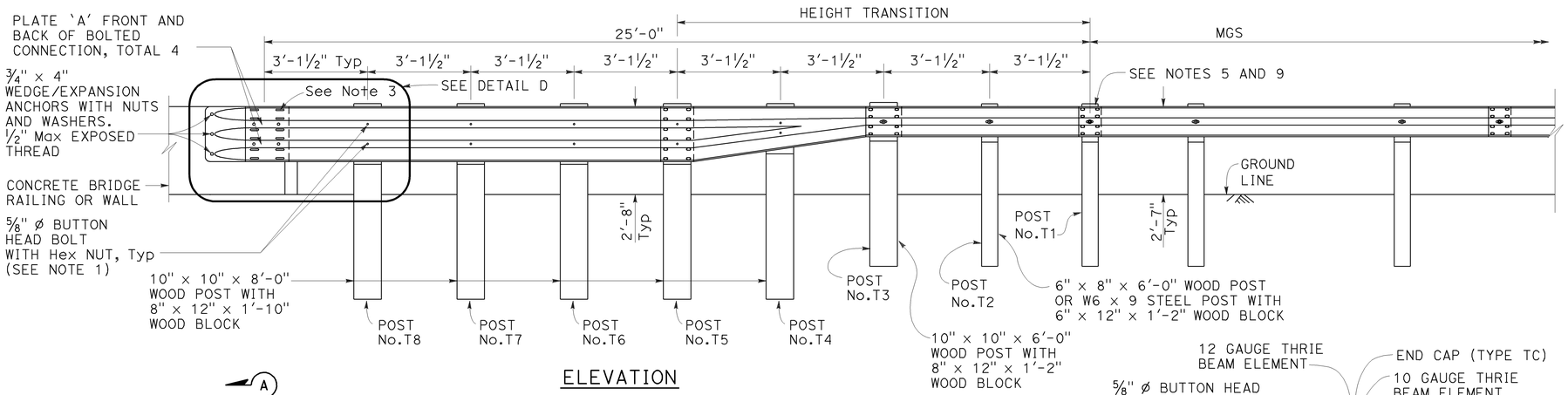

ELEVATION

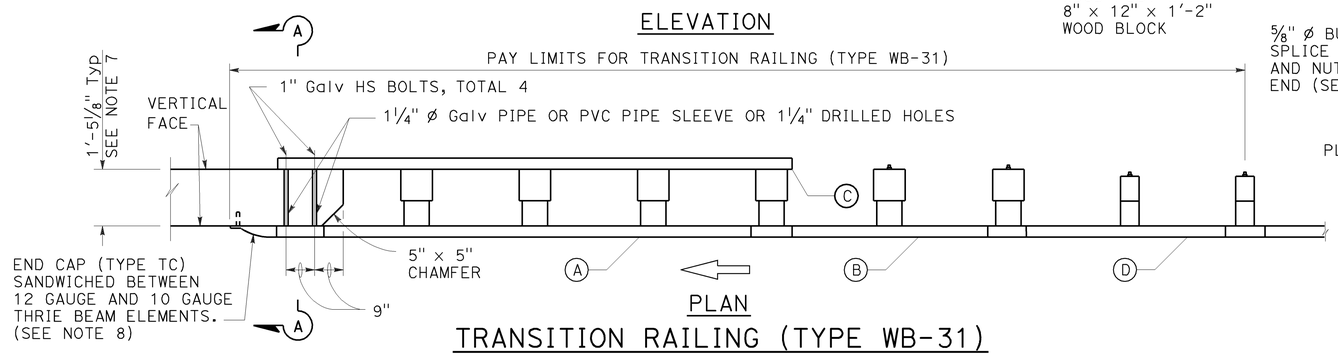

PLAN

TRANSITION RAILING (TYPE WB-31)

(No Blockout Attachment)

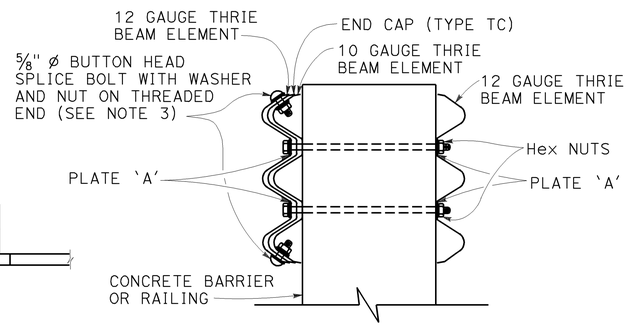

SECTION A-A

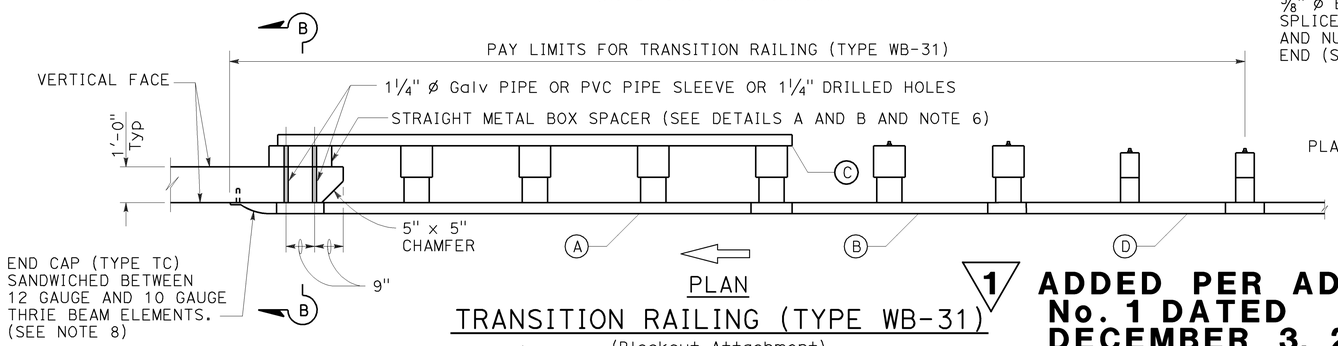

PLAN

TRANSITION RAILING (TYPE WB-31)

(Blockout Attachment)

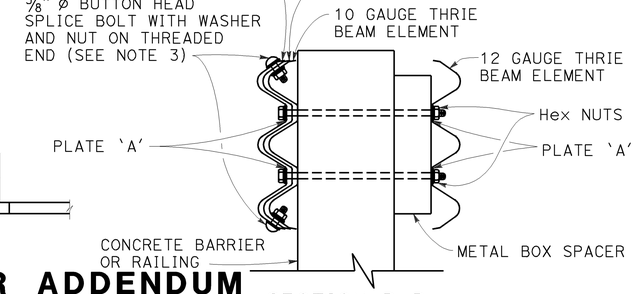

SECTION B-B

1 **ADDED PER ADDENDUM No. 1 DATED DECEMBER 3, 2014**

LEGEND:

(A) NESTED THRIE BEAM ELEMENTS (ONE 12 GAUGE ELEMENT NESTED OVER ONE 10 GAUGE ELEMENT).

(B) ONE ASYMMETRICAL 10 GAUGE "W" BEAM TO THRIE BEAM ELEMENT.

(C) ONE 12 GAUGE THRIE BEAM ELEMENT.

(D) ONE 10 GAUGE "W" BEAM RAIL ELEMENT (7'-3 1/2"LENGTH)

10 GAUGE = 0.138" THICK
12 GAUGE = 0.108" THICK

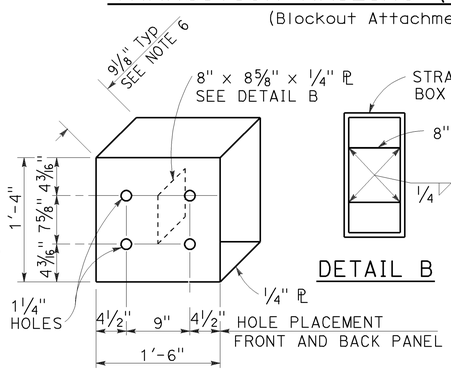

DETAIL A

STRAIGHT METAL BOX SPACER

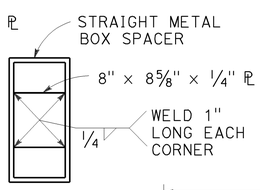

DETAIL B

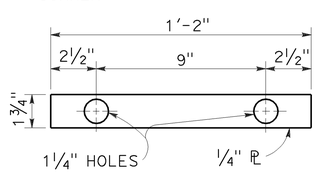

DETAIL C

PLATE 'A'

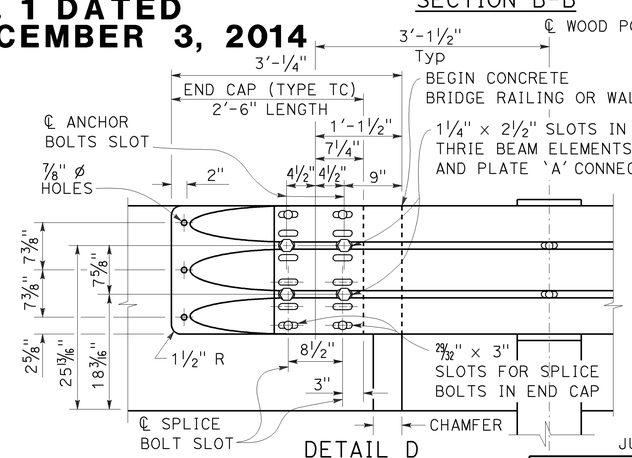

DETAIL D

NOTES:

TO ACCOMPANY PLANS DATED 12-03-14

1. Use 5/8" ø Button head bolts and hex nuts for connections to posts. No washer on rail face for bolted connections to post.
2. The nested rail elements, end cap, and 'W' beam to thrie beam element may be spliced together prior to bolting the elements to the wood post and concrete barrier or railing.
3. Exterior splice bolt holes for rail element splices at Post No. T5 and the connection to the concrete barrier or railing shall be the standard 29/32" × 1 1/8" slot size. Interior splice bolt holes at these locations may be increased up to 1 1/4" ø. Only the top 4 and the bottom 4 splice bolts with washers and nuts are required for rail splices at Post No. T5 and the connection to the concrete barrier or railing.
4. The top elevation of Posts No. T2 through No. T7 shall not project more than 1" above the top elevation of the rail element.
5. Typically, the railing connected to Transition Railing (Type WB-31) will be either standard railing section of MGS with height transition ratio of 150:1 or a Caltrans approved 31" end treatment attached to Post No. T1.
6. The depth of the metal box spacer varies from the 9 1/8" to 1 1/2" and is dependent on the width of the concrete railing or wall. The combined dimension for the depth of the metal box spacer plus the width of railing or wall is typically 21 1/8". Where the space between the backside of the concrete railing or wall and the rear thrie beam element is less than 1 1/2", metal plates similar to Plate 'A' are to be used as spacers.
7. Where the width of the concrete railing or wall is greater than 17 1/8", wood blocks are to be used to fill the space created between the backside of Posts No. T5 through No. T8 and the rear thrie beam element. These wood blocks shall be 8" in width and 1'-2" in length. The dimension between the front thrie beam element and the rear thrie beam element is to match the width of the concrete railing or wall.
8. End cap may be installed over 12 gauge and 10 gauge thrie beam elements where transition railing is installed on the departure end of bridge railing.
9. Conform standard railing section height to 31" at Post No. T1 using height transition ratio of 150:1.

STATE OF CALIFORNIA
DEPARTMENT OF TRANSPORTATION

MIDWEST GUARDRAIL SYSTEM TRANSITION RAILING (TYPE WB-31)

NO SCALE

RSP A77U4 DATED NOVEMBER 15, 2013 SUPERSEDES RSP A77U4 DATED JULY 19, 2013 THAT SUPPLEMENTS THE STANDARD PLANS BOOK DATED 2010.

REVISED STANDARD PLAN RSP A77U4

2010 REVISED STANDARD PLAN RSP A77U4

10-4-13