| Dist | COUNTY | ROUTE | POST MILES TOTAL PROJECT | SHEET No. | TOTAL SHEETS |
|---|---|---|---|---|---|
| 11 | Imp | 8 | 80.5/80.9 | 1 | 14 |

INDEX OF PLANS


| SHEET NO. | DESCRIPTION |
|---|---|
| 1 | TITLE AND LOCATION MAP |
| 2 | TYPICAL CROSS SECTIONS |
| 3-4 | LAYOUT |
| 5-8 | CONSTRUCTION DETAILS |
| 9 | CONSTRUCTION AREA SIGNS |
| 10-11 | PAVEMENT DELINEATION DETAILS AND QUANTITIES |
| 12-13 | SUMMARY OF QUANTITIES |
| 14 | REVISED STANDARD PLANS |


THE STANDARD PLANS LIST APPLICABLE TO THIS CONTRACT IS INCLUDED IN THE NOTICE TO BIDDERS AND SPECIAL PROVISIONS BOOK.

STATE OF CALIFORNIA

# DEPARTMENT OF TRANSPORTATION

# PROJECT PLANS FOR CONSTRUCTION ON

# STATE HIGHWAY

## IN IMPERIAL COUNTY

## ABOUT 15 MILES WEST OF WINTERHAVEN FROM 0.3 MILE WEST OF SAND HILLS OVERCROSSING TO 0.1 MILE EAST OF SAND HILLS OVERCROSSING

TO BE SUPPLEMENTED BY STANDARD PLANS DATED 2010

LOCATION MAP

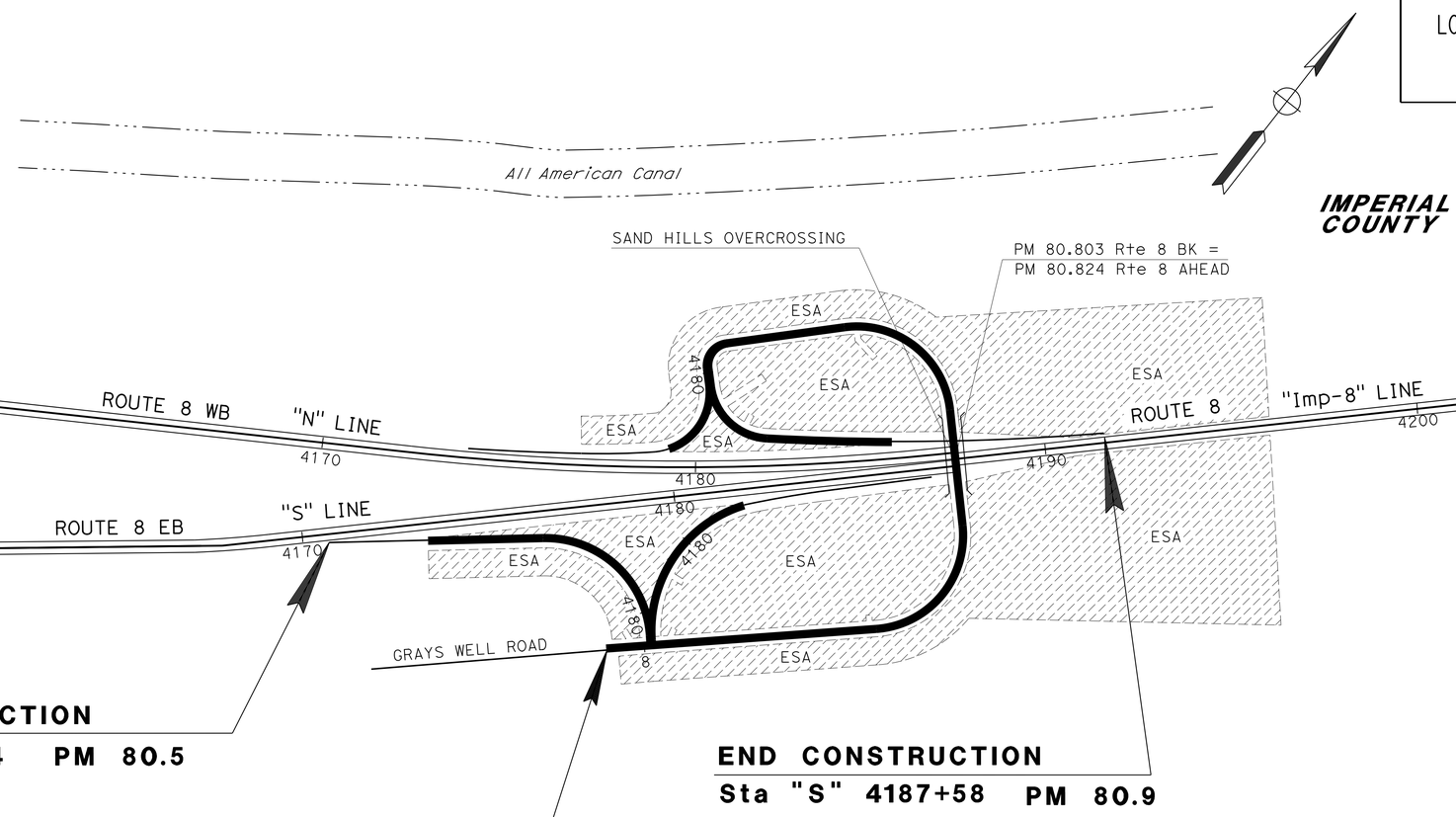


NO SCALE

PROJECT MANAGER KAZIM MAMDANI

DESIGN ENGINEER MARVIN CANTON

THE CONTRACTOR SHALL POSSESS THE CLASS (OR CLASSES) OF LICENSE AS SPECIFIED IN THE "NOTICE TO BIDDERS."

09-10-12

PROJECT ENGINEER REGISTERED CIVIL ENGINEER — DATE

REGISTERED PROFESSIONAL ENGINEER MARVIN A. CANTON No. C69855 Exp. 09-30-14 CIVIL STATE OF CALIFORNIA

November 5, 2012

PLANS APPROVAL DATE

*THE STATE OF CALIFORNIA OR ITS OFFICERS OR AGENTS SHALL NOT BE RESPONSIBLE FOR THE ACCURACY OR COMPLETENESS OF SCANNED COPIES OF THIS PLAN SHEET.*

DATE PLOTTED => 10-DEC-2012
TIME PLOTTED => 14:20

| CONTRACT No. | 11-410704 |
|---|---|
| PROJECT ID | 1112000113 |

LAST REVISION 09-13-12

| Dist | COUNTY | ROUTE | POST MILES TOTAL PROJECT | SHEET No. | TOTAL SHEETS |
|---|---|---|---|---|---|
| 11 | Imp | 8 | 80.5/80.9 | 2 | 14 |

REGISTERED CIVIL ENGINEER 09-10-12 DATE

11-05-12
PLANS APPROVAL DATE

REGISTERED PROFESSIONAL ENGINEER MARVIN A. CANTON No. C69855 Exp. 09-30-14 CIVIL STATE OF CALIFORNIA

*THE STATE OF CALIFORNIA OR ITS OFFICERS OR AGENTS SHALL NOT BE RESPONSIBLE FOR THE ACCURACY OR COMPLETENESS OF SCANNED COPIES OF THIS PLAN SHEET.*

## NOTES:

1. DIMENSIONS OF THE PAVEMENT STRUCTURES (STRUCTURAL SECTIONS) ARE SUBJECT TO TOLERANCES SPECIFIED IN THE STANDARD SPECIFICATIONS.
2. EXISTING UTILITY FACILITIES HAVE NOT BEEN PLOTTED ON THESE PLANS.
3. FOG SEAL COAT SHALL BE APPLIED TO ALL HMA SURFACES EXCEPT TRAVELED WAYS.
4. FOR LOCATION OF METAL BEAM GUARD RAILING AND LOCATION AND TYPE OF DIKES SEE LAYOUT SHEETS AND SUMMARY OF QUANTITIES SHEETS.
5. MATCH EXISTING PAVEMENT SLOPE.

## DESIGN DESIGNATION (Rte 8)

| | | |
|---|---|---|
| ADT(2007) | 27,000 | D=50.1 % |
| ADT(2020) | 35,800 | T=13.6 % |
| DHV | 2,560 | V=70 MPH |

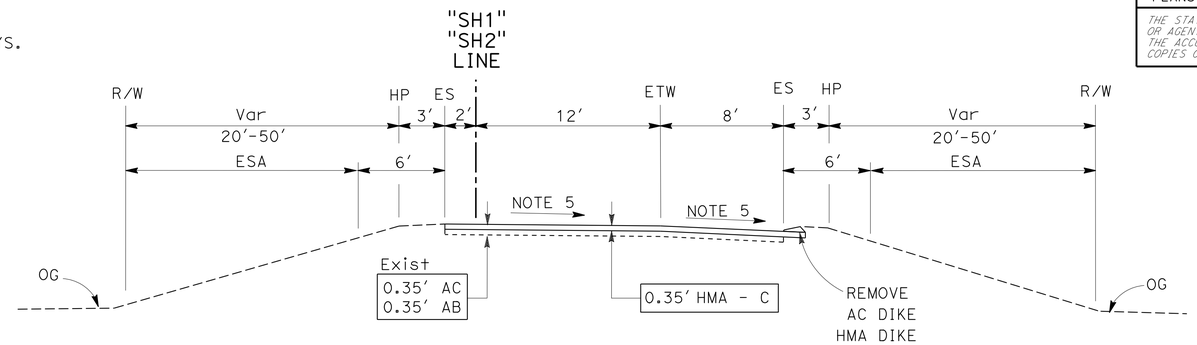


RAMPS

"SH1" 4177+13.60 TO 4181+84.82
"SH2" 4173+35.69 TO 4180+78.58

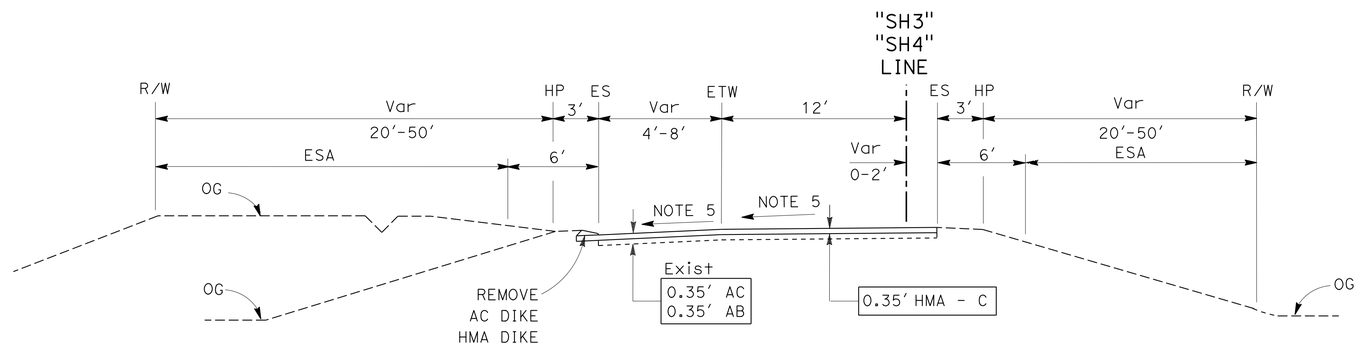


RAMPS

"SH3" 4179+30.00 TO 4182+84.08
"SH4" 4178+94.97 TO 4185+96.36

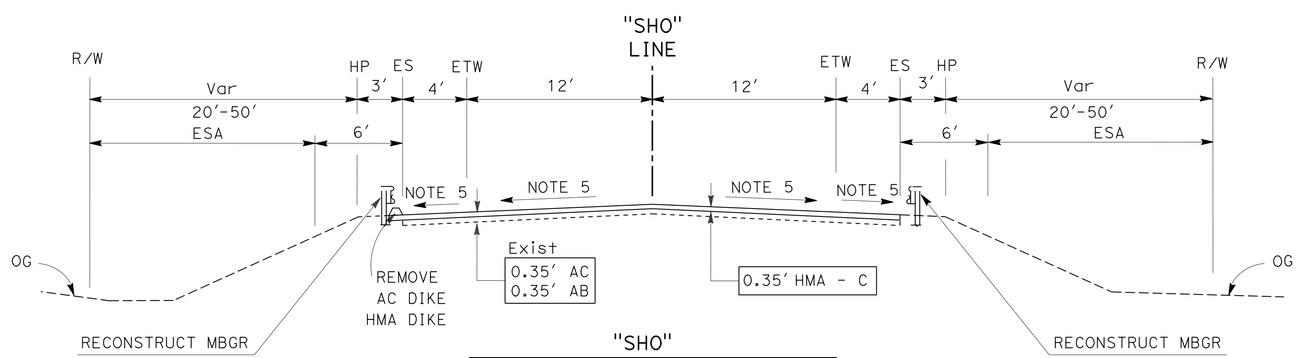


"SHO"

Sta 7+29.18 TO Sta 19+04.80
Sta 21+09.80 TO Sta 28+51.50

# TYPICAL CROSS SECTIONS

NO SCALE

X-1

STATE OF CALIFORNIA - DEPARTMENT OF TRANSPORTATION
Caltrans PROJECT DEVELOPMENT

FUNCTIONAL SUPERVISOR: KAZIM MAMDANI
CALCULATED-DESIGNED BY: JIM ALSHEIKH
CHECKED BY: MARVIN CANTON
REVISED BY
DATE REVISED

LAST REVISION 09-13-12
DATE PLOTTED => 10-DEC-2012
TIME PLOTTED => 14:20

| Dist | COUNTY | ROUTE | POST MILES TOTAL PROJECT | SHEET No. | TOTAL SHEETS |
|---|---|---|---|---|---|
| 11 | Imp | 8 | 80.5/80.9 | 3 | 14 |

REGISTERED CIVIL ENGINEER 09-10-12 DATE

11-05-12
PLANS APPROVAL DATE

REGISTERED PROFESSIONAL ENGINEER MARVIN A. CANTON No. C69855 Exp. 09-30-14 CIVIL STATE OF CALIFORNIA

*THE STATE OF CALIFORNIA OR ITS OFFICERS OR AGENTS SHALL NOT BE RESPONSIBLE FOR THE ACCURACY OR COMPLETENESS OF SCANNED COPIES OF THIS PLAN SHEET.*

## NOTES:

1. FOR ACCURATE RIGHT OF WAY DATA, CONTACT RIGHT OF WAY ENGINEERING AT THE DISTRICT OFFICE.
2. SEE QUANTITY SHEETS FOR TYPE OF MBGR AND HMA OVERSIDE DRAIN WORK.

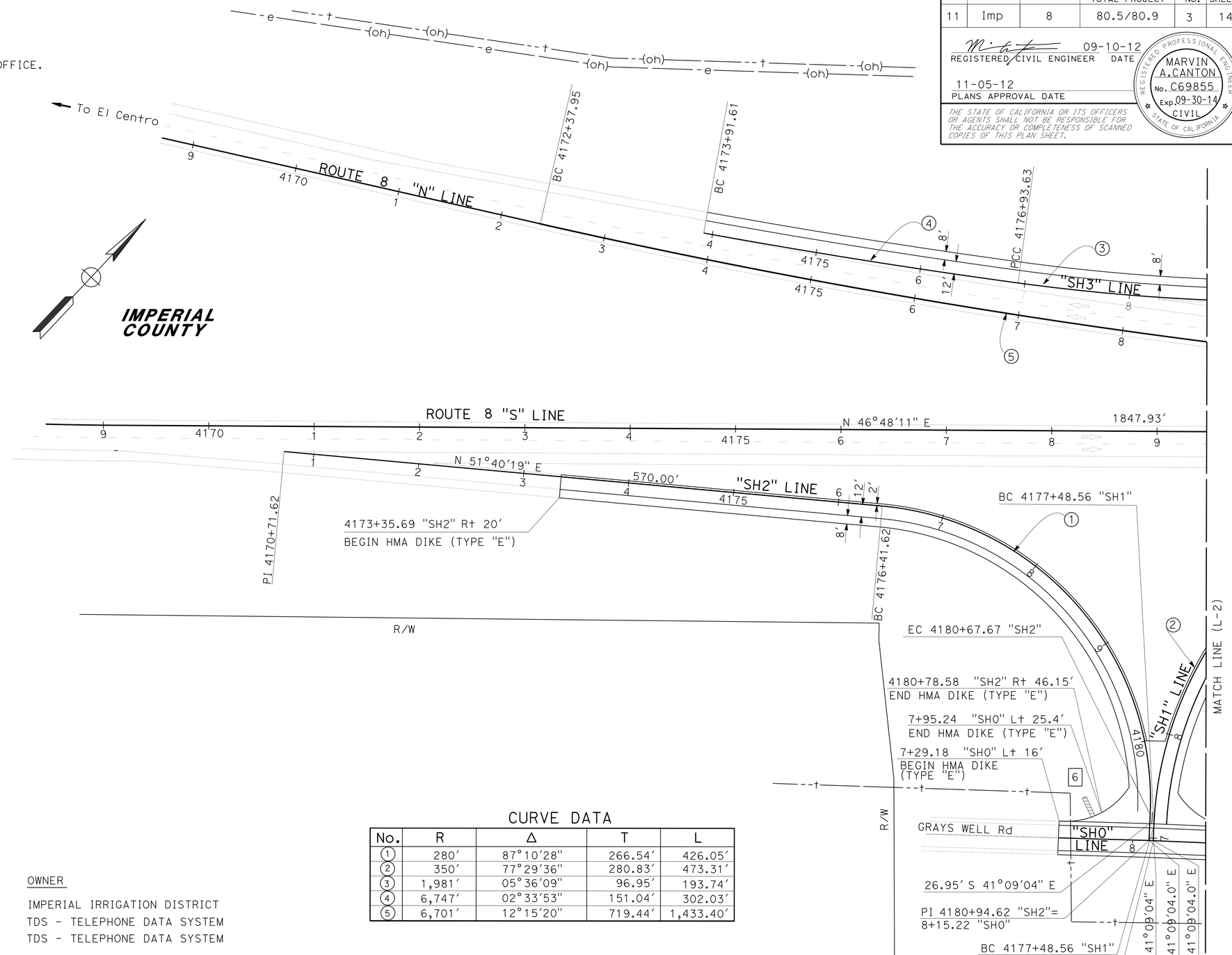


## LEGEND:

- HMA, OVERSIDE DRAIN
- # OVERSIDE DRAIN No.
- # METAL BEAM GUARD RAILING
- TEMPORARY DRAINAGE INLET PROTECTION

| EXISTING UTILITY | SYMBOL | OWNER |
|---|---|---|
| ELECTRIC OVERHEAD LINE | —— - e ——— ———-(oh)- | IMPERIAL IRRIGATION DISTRICT |
| TELEPHONE OVERHEAD LINE | —— - - † ——— ———- - (oh)— | TDS - TELEPHONE DATA SYSTEM |
| TELEPHONE UNDERGROUND LINE | —— - - † ——— ——— - - † — | TDS - TELEPHONE DATA SYSTEM |

## CURVE DATA

| No. | R | Δ | T | L |
|---|---|---|---|---|
| 1 | 280' | 87°10'28" | 266.54' | 426.05' |
| 2 | 350' | 77°29'36" | 280.83' | 473.31' |
| 3 | 1,981' | 05°36'09" | 96.95' | 193.74' |
| 4 | 6,747' | 02°33'53" | 151.04' | 302.03' |
| 5 | 6,701' | 12°15'20" | 719.44' | 1,433.40' |

SCALE: 1" = 50'

# LAYOUT L-1

STATE OF CALIFORNIA - DEPARTMENT OF TRANSPORTATION
Caltrans PROJECT DEVELOPMENT

FUNCTIONAL SUPERVISOR: KAZIM MAMDANI
CALCULATED-DESIGNED BY: JIM ALSHEIKH
CHECKED BY: MARVIN A. CANTON
REVISED BY / DATE REVISED

LAST REVISION 09-13-12 | DATE PLOTTED => 10-DEC-2012 | TIME PLOTTED => 14:20

| Dist | COUNTY | ROUTE | POST MILES TOTAL PROJECT | SHEET No. | TOTAL SHEETS |
|---|---|---|---|---|---|
| 11 | Imp | 8 | 80.5/80.9 | 4 | 14 |

REGISTERED CIVIL ENGINEER 09-10-12 DATE

11-05-12
PLANS APPROVAL DATE

REGISTERED PROFESSIONAL ENGINEER MARVIN A. CANTON No. C69855 Exp. 09-30-14 CIVIL STATE OF CALIFORNIA

*THE STATE OF CALIFORNIA OR ITS OFFICERS OR AGENTS SHALL NOT BE RESPONSIBLE FOR THE ACCURACY OR COMPLETENESS OF SCANNED COPIES OF THIS PLAN SHEET.*

**NOTE:**

FOR ACCURATE RIGHT OF WAY DATA,
CONTACT RIGHT OF WAY ENGINEERING AT THE DISTRICT OFFICE.

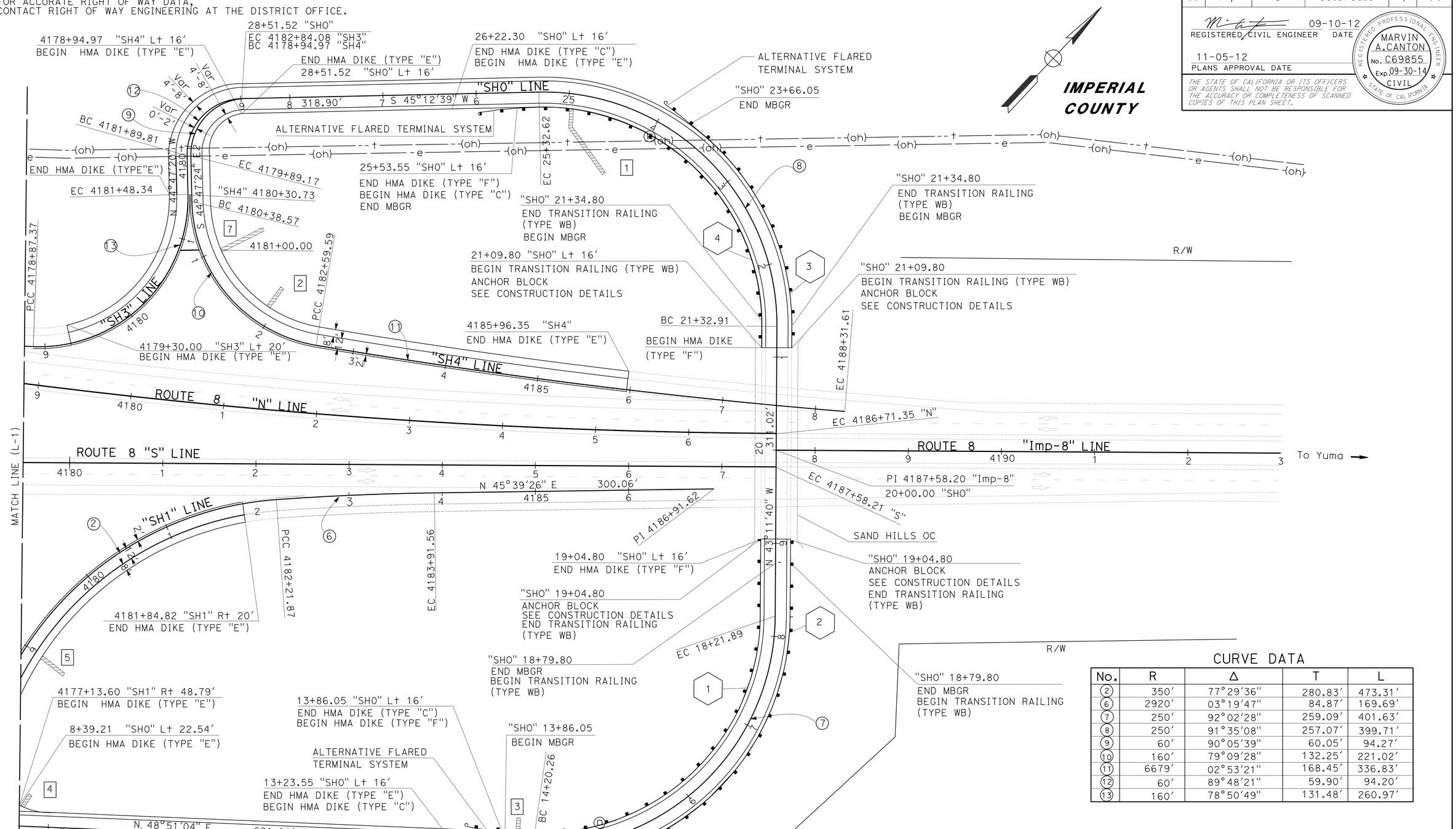


## CURVE DATA

| No. | R | Δ | T | L |
|---|---|---|---|---|
| 2 | 350' | 77°29'36" | 280.83' | 473.31' |
| 6 | 2920' | 03°19'47" | 84.87' | 169.69' |
| 7 | 250' | 92°02'28" | 259.09' | 401.63' |
| 8 | 250' | 91°35'08" | 257.07' | 399.71' |
| 9 | 60' | 90°05'39" | 60.05' | 94.27' |
| 10 | 160' | 79°09'28" | 132.25' | 221.02' |
| 11 | 6679' | 02°53'21" | 168.45' | 336.83' |
| 12 | 60' | 89°48'21" | 59.90' | 94.20' |
| 13 | 160' | 78°50'49" | 131.48' | 260.97' |

# LAYOUT L-2

SCALE: 1" = 50'

STATE OF CALIFORNIA - DEPARTMENT OF TRANSPORTATION
Caltrans PROJECT DEVELOPMENT

FUNCTIONAL SUPERVISOR: KAZIM MAMDANI
CALCULATED-DESIGNED BY: JIM ALSHEIKH
CHECKED BY: MARVIN A. CANTON
REVISED BY / DATE REVISED

LAST REVISION 09-14-12
DATE PLOTTED => 10-DEC-2012
TIME PLOTTED => 14:20

| Dist | COUNTY | ROUTE | POST MILES TOTAL PROJECT | SHEET No. | TOTAL SHEETS |
|---|---|---|---|---|---|
| 11 | Imp | 8 | 80.5/80.9 | 5 | 14 |

REGISTERED CIVIL ENGINEER 09-10-12 DATE

11-05-12
PLANS APPROVAL DATE

REGISTERED PROFESSIONAL ENGINEER MARVIN A. CANTON No. C69855 Exp. 09-30-14 CIVIL STATE OF CALIFORNIA

*THE STATE OF CALIFORNIA OR ITS OFFICERS OR AGENTS SHALL NOT BE RESPONSIBLE FOR THE ACCURACY OR COMPLETENESS OF SCANNED COPIES OF THIS PLAN SHEET.*

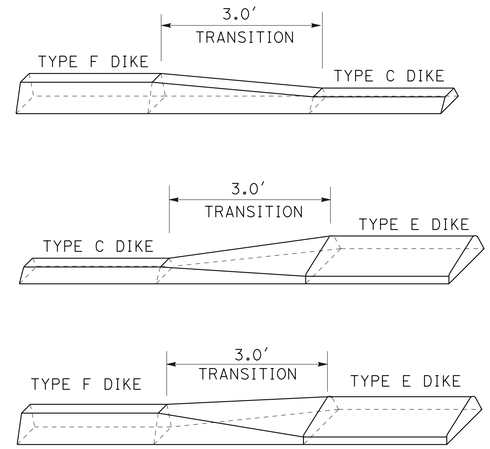


## HMA DIKE TRANSITION

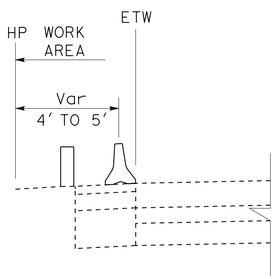


SECTION A-A

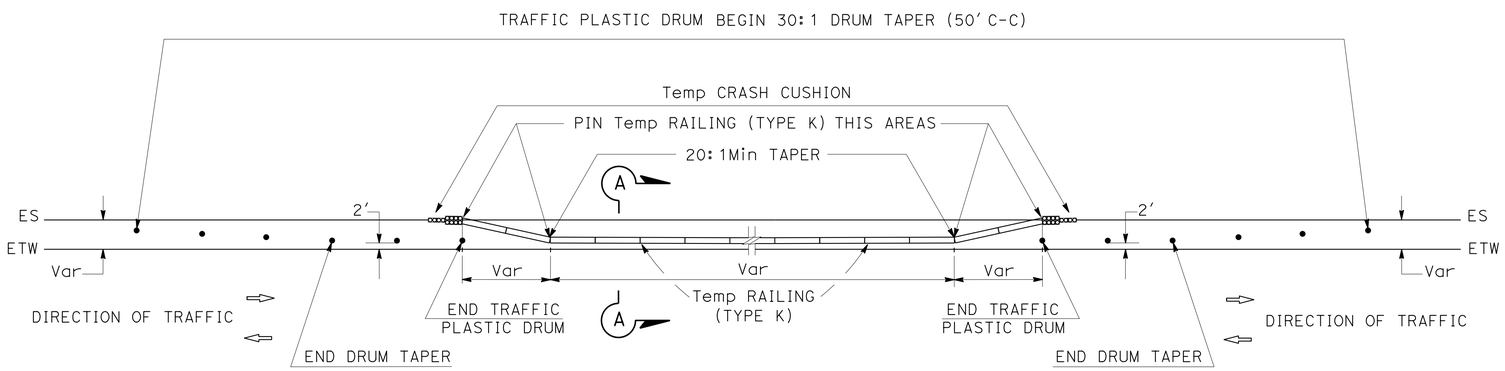


## TEMPORARY RAILING (TYPE K) AND TRAFFIC PLASTIC DRUMS AT ANCHOR BLOCK CONSTRUCTION

# CONSTRUCTION DETAILS

NO SCALE

C-1

| REVISED BY | DATE REVISED |
|---|---|
| JIM ALSHEIKH | MARVIN A. CANTON |
| CALCULATED-DESIGNED BY | CHECKED BY |
| FUNCTIONAL SUPERVISOR | KAZIM MAMDANI |

STATE OF CALIFORNIA - DEPARTMENT OF TRANSPORTATION
Caltrans PROJECT DEVELOPMENT

LAST REVISION 09-19-12 DATE PLOTTED => 10-DEC-2012 TIME PLOTTED => 14:20

| Dist | COUNTY | ROUTE | POST MILES TOTAL PROJECT | SHEET No. | TOTAL SHEETS |
|---|---|---|---|---|---|
| 11 | Imp | 8 | 80.5/80.9 | 6 | 14 |

REGISTERED CIVIL ENGINEER 09-10-12 DATE

11-05-12
PLANS APPROVAL DATE

REGISTERED PROFESSIONAL ENGINEER MARVIN A. CANTON No. C69855 Exp. 09-30-14 CIVIL STATE OF CALIFORNIA

*THE STATE OF CALIFORNIA OR ITS OFFICERS OR AGENTS SHALL NOT BE RESPONSIBLE FOR THE ACCURACY OR COMPLETENESS OF SCANNED COPIES OF THIS PLAN SHEET.*

## NOTES:

1. FOR DETAILS NOT SHOWN, SEE STANDARD PLAN A77J3.
2. DEPENDENT DIMENSIONS SHALL BE VERIFIED IN THE FIELD BEFORE FABRICATING ANY END CONNECTION TO CONFORM WITH EXISTING PAVED CONDITIONS.
3. ALL PLATES AND BOLTS ARE GALVANIZED.
4. TAPER THE TOP OF THE END OF THE ANCHOR BLOCK AT 4:1 TO MATCH THE TOP ELEVATION OF THE TRANSITION RAILING (TYPE WB).

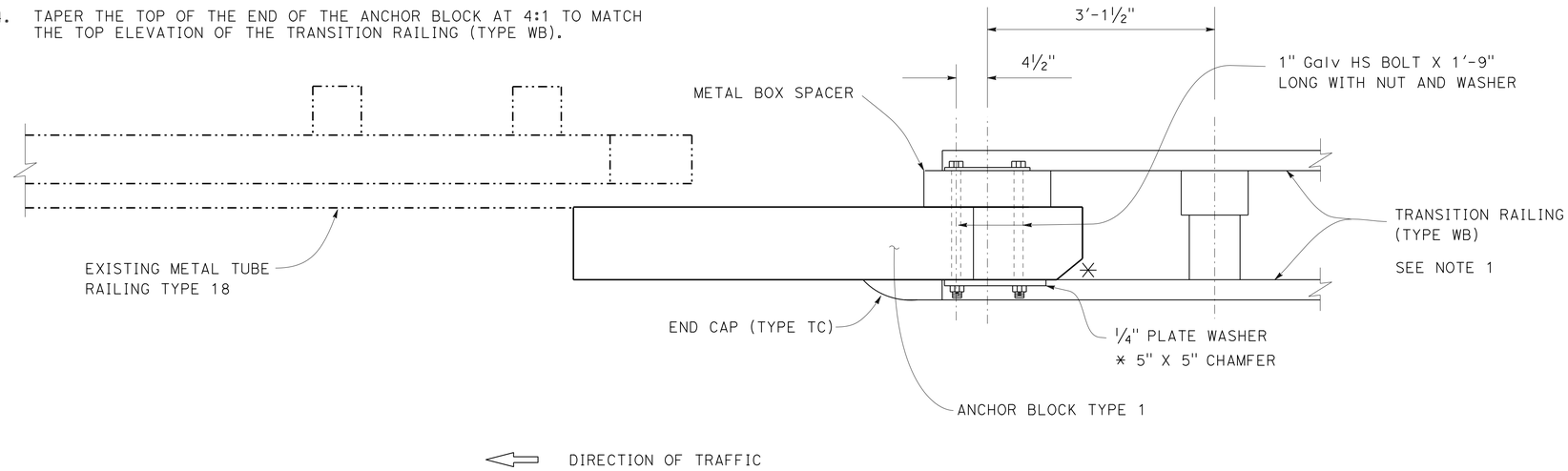


PLAN

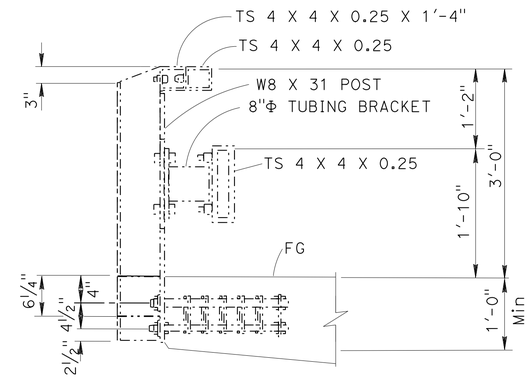


SECTION B-B

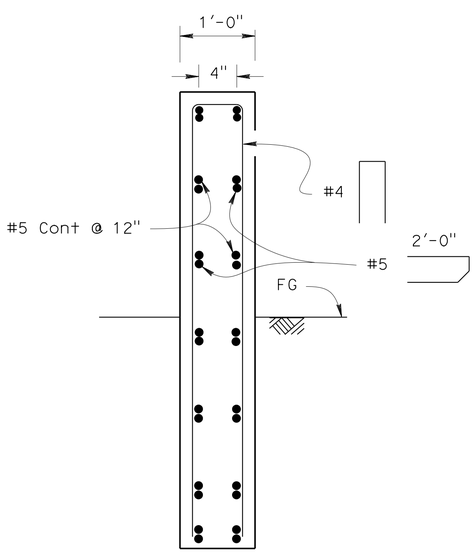


SECTION A-A

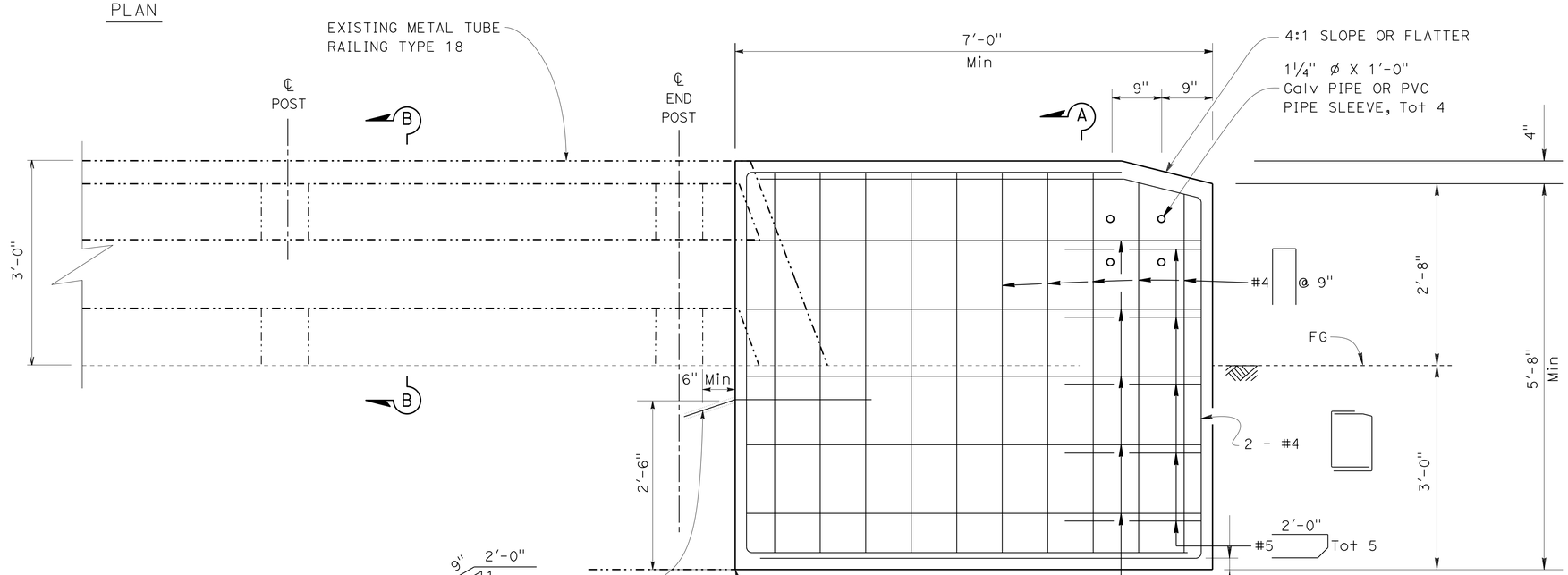


ELEVATION

## ANCHOR BLOCK, TYPE 1

## CONSTRUCTION DETAILS

NO SCALE

C-2

STATE OF CALIFORNIA - DEPARTMENT OF TRANSPORTATION
Caltrans PROJECT DEVELOPMENT

FUNCTIONAL SUPERVISOR: KAZIM MAMDANI
CALCULATED-DESIGNED BY: JIM ALSHEIKH
CHECKED BY: MARVIN A. CANTON
REVISED BY
DATE REVISED

LAST REVISION 09-20-12
DATE PLOTTED => 10-DEC-2012
TIME PLOTTED => 14:20

| Dist | COUNTY | ROUTE | POST MILES TOTAL PROJECT | SHEET No. | TOTAL SHEETS |
|---|---|---|---|---|---|
| 11 | Imp | 8 | 80.5/80.9 | 7 | 14 |

REGISTERED CIVIL ENGINEER 09-10-12 DATE

11-05-12
PLANS APPROVAL DATE

REGISTERED PROFESSIONAL ENGINEER MARVIN A. CANTON No. C69855 Exp. 09-30-14 CIVIL STATE OF CALIFORNIA

*THE STATE OF CALIFORNIA OR ITS OFFICERS OR AGENTS SHALL NOT BE RESPONSIBLE FOR THE ACCURACY OR COMPLETENESS OF SCANNED COPIES OF THIS PLAN SHEET.*

## NOTES:

Unless otherwise specified in the special provisions, all temporary warning signs shall have black legend on orange background.

California code are designated by (CA). Otherwise, Federal (MUTCD) codes are shown.

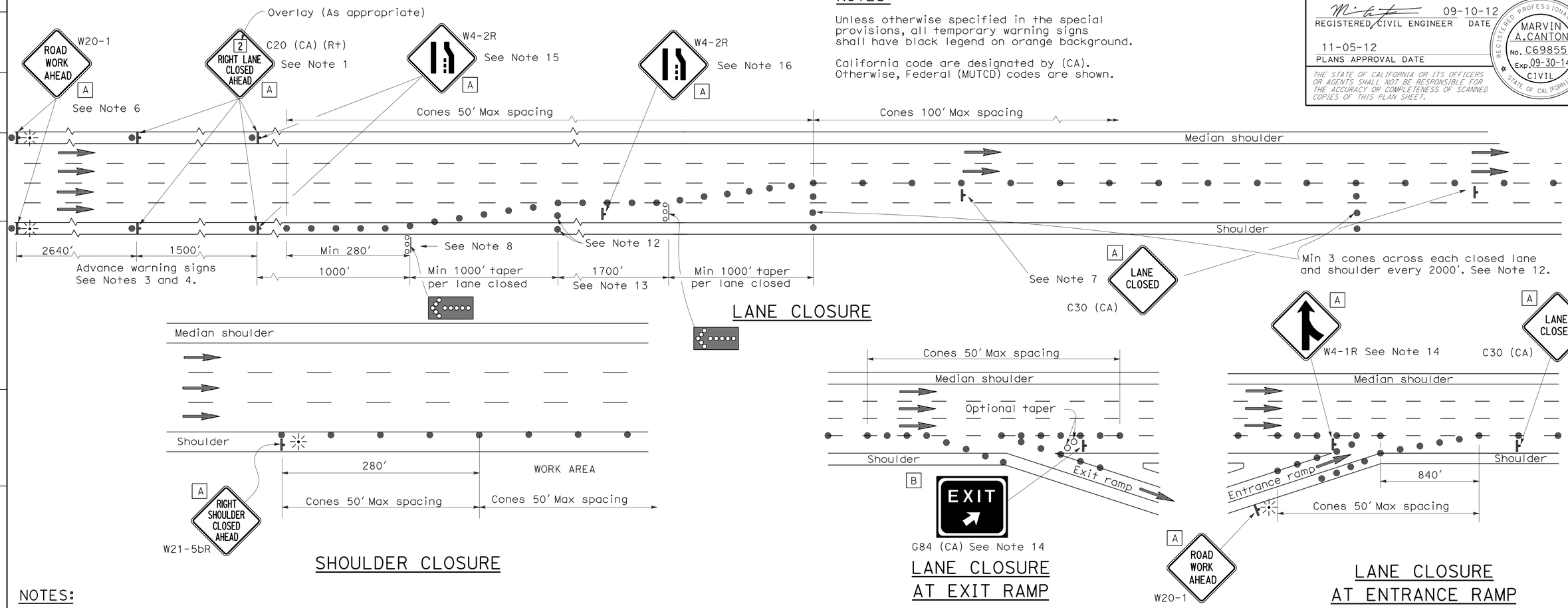


LANE CLOSURE

SHOULDER CLOSURE

LANE CLOSURE AT EXIT RAMP

LANE CLOSURE AT ENTRANCE RAMP

## NOTES:

1. Median lane closures shall conform to the details for outside lane closures except that C20 (CA) (Lt) signs shall be used.
2. At least one person shall be assigned to provide full time maintenance of traffic control devices for lane closures.
3. Duplicate sign installations are not required:
   a) On opposite shoulder if at least one-half of the available lanes remain open to traffic.
   b) In the median if the width of the median shoulder is less than 8′ and the outside lanes are to be closed.
4. Each advance warning sign on each side of the roadway shall be equipped with at least two flags for daytime closure. Each flag shall be at least 16" x 16" in size and shall be orange or fluorescent red-orange in color. Flashing beacons shall be placed at the locations indicated for lane closure during hours of darkness.
5. A C14 (CA) "END ROAD WORK" sign, as appropriate, shall be placed at the end of the lane closure unless the end of work area is obvious or ends within a larger project's limits.
6. If the W20-1 sign would follow within 2000′ of a stationary W20-1 or C11 (CA) "ROAD WORK NEXT _____ MILES", use a C20 (CA) sign for the first advance warning sign.
7. Place a C30 (CA) sign every 2000′ throughout length of lane closure.
8. One flashing arrow sign for each lane closed. The first flashing arrow sign shall be Type I. All others may be either Type I or Type II.
9. A minimum 1500′ of sight distance shall be provided where possible for vehicles approaching the first flashing arrow sign. Lane closures shall not begin at top of crest vertical curve or on a horizontal curve.
10. All cones used for lane closures during the hours of darkness shall be fitted with retroreflective bands (or sleeves) as specified in the specifications.
11. Portable delineators, placed at one-half the spacing indicated for traffic cones may be used instead of cones for daytime closures only.
12. Unless otherwise specified in the special provisions, a minimum of 3 cones shall be placed transversely across each closed lane and shoulder at each location where a taper across a traffic lane ends and every 2000′ as shown on the "Lane Closure" detail. Two Type II barricades may be used instead of the 3 cones. The transverse alignment of the cones or barricades on the closed shoulder may be shifted from the transverse alignment to provide access to the work.
13. Unless otherwise specified in the special provisions, the 1700′ tangent shown along lane lines shall be used between the 1000′ tapers required for each closed traffic lane.
14. Unless otherwise specified in the special provisions, the G84 (CA) and W4-1 signs shall be used as shown.
15. When specified in the special provisions, a W4-2 "LANE ENDS" symbol sign is to be used in place of the C20 (CA) "RIGHT LANE CLOSED AHEAD" sign.
16. The W4-2 "LANE ENDS" symbol sign shown at this location is to be used where the W4-2 sign is used as advance warning as described in Note 15.

## SIGN PANEL SIZE (Min)

| | |
|---|---|
| A | 48" x 48" |
| B | 54" x 48" |

## LEGEND

- Traffic Cone
- Traffic Cone (optional taper)
- Temporary Sign
- Flashing Arrow Sign (FAS)
- FAS Support or Trailer
- Direction of Travel
- Portable Flashing Beacon

# TRAFFIC CONTROL SYSTEM FOR LANE CLOSURE ON FREEWAYS AND EXPRESSWAYS

## CONSTRUCTION DETAILS

NO SCALE

NO SCALE

C-3

REVISED BY | DATE REVISED
JIM ALSHEIKH | MARVIN A. CANTON
CALCULATED-DESIGNED BY | CHECKED BY
FUNCTIONAL SUPERVISOR | KAZIM MAMDANI

STATE OF CALIFORNIA - DEPARTMENT OF TRANSPORTATION
Caltrans PROJECT DEVELOPMENT

LAST REVISION 09-20-12 | DATE PLOTTED => 10-DEC-2012 | TIME PLOTTED => 14:20

| Dist | COUNTY | ROUTE | POST MILES TOTAL PROJECT | SHEET No. | TOTAL SHEETS |
|---|---|---|---|---|---|
| 11 | Imp | 8 | 80.5/80.9 | 8 | 14 |

REGISTERED CIVIL ENGINEER 09-10-12 DATE

11-05-12
PLANS APPROVAL DATE

REGISTERED PROFESSIONAL ENGINEER MARVIN A. CANTON No. C69855 Exp. 09-30-14 CIVIL STATE OF CALIFORNIA

*THE STATE OF CALIFORNIA OR ITS OFFICERS OR AGENTS SHALL NOT BE RESPONSIBLE FOR THE ACCURACY OR COMPLETENESS OF SCANNED COPIES OF THIS PLAN SHEET.*

# TYPICAL RAMP CLOSURES

## SIGN PANEL SIZE (Min)

- A 48" x 48"
- B 48" x 30"
- C 30" x 30"
- D 48" x 48" - Speed of 50 mph or more
  36" x 36" - Speed less than 50 mph
- E 48" x 36"

## LEGEND

- Traffic Cone
- Temporary Sign
- Barricades
- Direction of Travel
- Turn Arrow

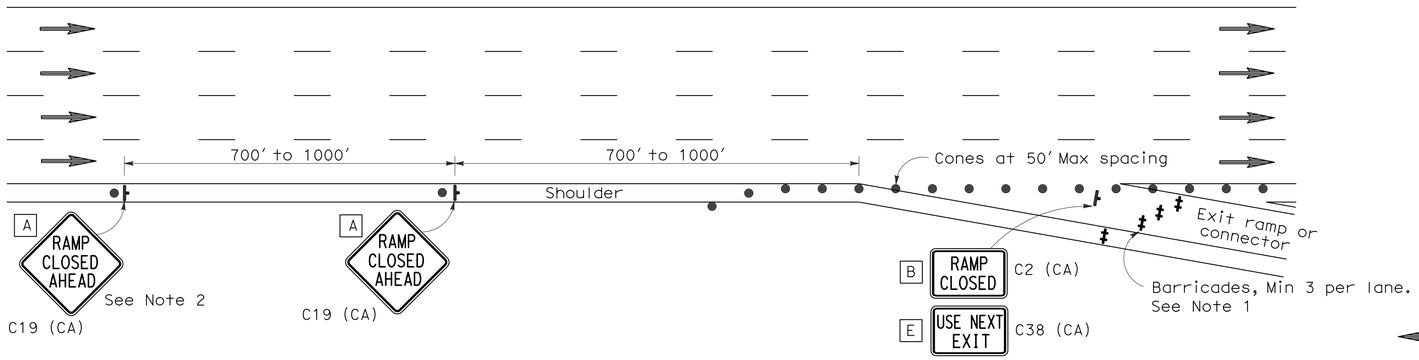


## EXIT RAMP OR CONNECTOR

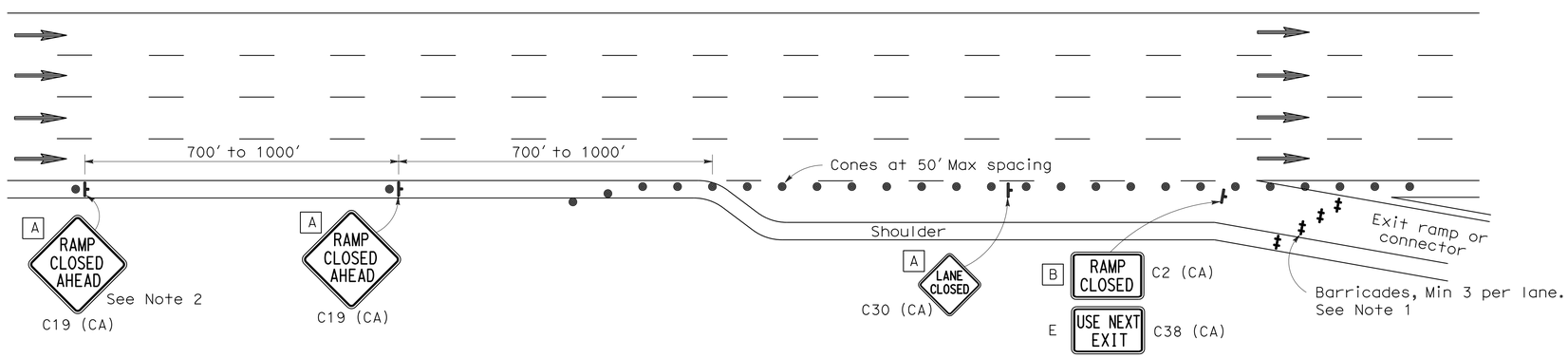


## EXIT RAMP OR CONNECTOR WITH ADDITIONAL LANE

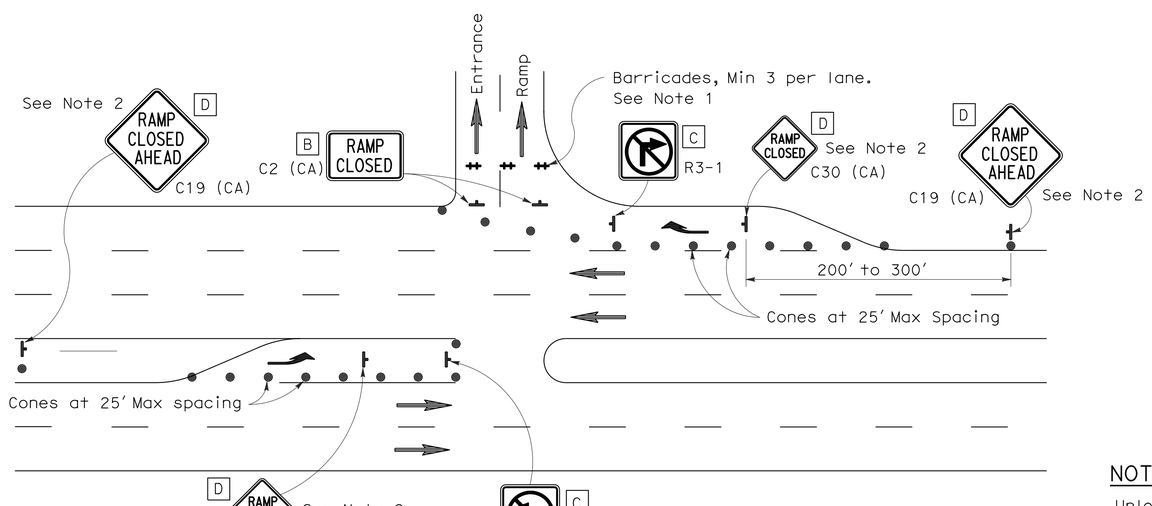


## ENTRANCE RAMP WITH TURNING POCKETS

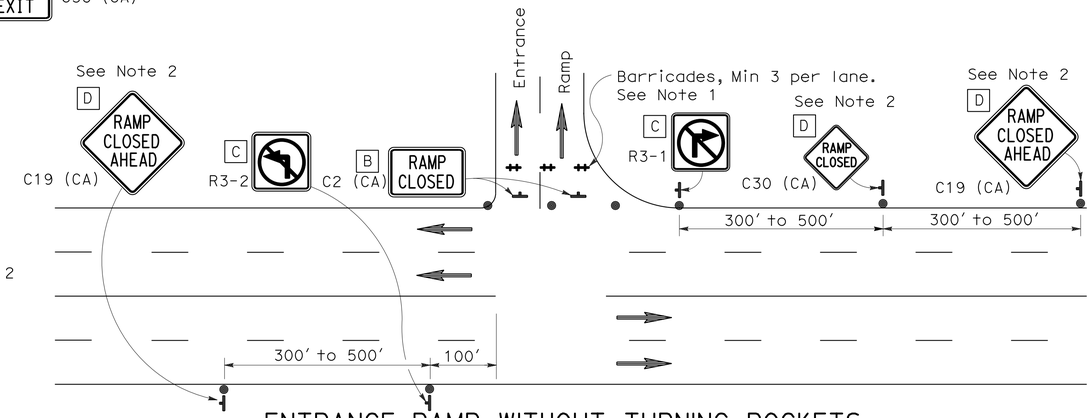


## ENTRANCE RAMP WITHOUT TURNING POCKETS

## NOTES:

1. Barricades shall be Type I, II, or III for closures lasting one week or less and Type III for closures lasting longer than one week.
2. In addition to placing the C19 (CA) "RAMP CLOSED AHEAD" and C30 (CA) "RAMP CLOSED" signs, black on orange overlay plates with the word "CLOSED" may be mounted, as directed by the Engineer, on all guide signs that refer to the closed ramp. The letter size on the overlay shall be the same as the guide sign.
3. Each advance C19 (CA) "RAMP CLOSED AHEAD" sign shall be equipped with at least two flags for daytime closure. Each flag shall be at least 16" x 16" in size and shall be orange or fluorescent red-orange in color.
4. All cones used for ramp closures during the hours of darkness shall be fitted with retroreflective bands (or sleeves) as specified in the specifications.
5. Portable delineators, placed at one-half the spacing indicated for traffic cones, may be used instead of cones for daytime ramp closures only.
6. At least one person shall be assigned to provide full time maintenance of traffic control devices, unless otherwise directed by the Engineer.
7. The existing "EXIT" sign in the gore area shall be covered during ramp closures.

## NOTES:

Unless otherwise specified in the special provisions, all temporary warning signs shall have black legend on orange background.

California code are designated by (CA). Otherwise, Federal (MUTCD) codes are shown.

# TRAFFIC CONTROL SYSTEM FOR RAMP CLOSURE

## CONSTRUCTION DETAILS

NO SCALE

C-4

STATE OF CALIFORNIA - DEPARTMENT OF TRANSPORTATION
Caltrans PROJECT DEVELOPMENT

FUNCTIONAL SUPERVISOR: KAZIM MAMDANI
CALCULATED-DESIGNED BY: JIM ALSHEIKH
CHECKED BY: MARVIN A. CANTON
REVISED BY
DATE REVISED

LAST REVISION 09-20-12
DATE PLOTTED => 10-DEC-2012
TIME PLOTTED => 14:20

| Dist | COUNTY | ROUTE | POST MILES TOTAL PROJECT | SHEET No. | TOTAL SHEETS |
|---|---|---|---|---|---|
| 11 | Imp | 8 | 80.5/80.9 | 9 | 12 |

REGISTERED CIVIL ENGINEER 09-10-12 DATE

11-05-12
PLANS APPROVAL DATE

REGISTERED PROFESSIONAL ENGINEER MARVIN A. CANTON No. C69855 Exp. 09-30-14 CIVIL STATE OF CALIFORNIA

*THE STATE OF CALIFORNIA OR ITS OFFICERS OR AGENTS SHALL NOT BE RESPONSIBLE FOR THE ACCURACY OR COMPLETENESS OF SCANNED COPIES OF THIS PLAN SHEET.*

## NOTES:

1. EXACT LOCATION OF CONSTRUCTION AREA SIGNS TO BE DETERMINED BY THE ENGINEER.
2. FEDERAL MANUAL ON UNIFORM TRAFFIC CONTROL DEVICES (MUTCD) SIGN CODES ARE SHOWN UNLESS DESIGNATED BY (CA), INDICATING CALIFORNIA MUTCD.
3. EXISTING UTILITIES ARE NOT SHOWN ON THESE PLAN SHEETS. THE CONTRACTOR SHALL VERIFY LOCATIONS OF EXISTING UTILITIES AND AVOID IMPACTING THESE EXISTING UTILITIES BY ADJUSTING THE FIELD LOCATION OF THE SIGN POST IN CONSULTATION WITH THE ENGINEER.

## LEGEND:

XX CONSTRUCTION AREA SIGN

## CONSTRUCTION AREA SIGNS

| SIGN No. | TYPE | PANEL SIZE (In) | No. OF POST AND SIZE | No. OF SIGNS |
|---|---|---|---|---|
| 1 | C40 (CA) | 108 x 42 | 2 - 4 x 6 (S) | 2 |
| 2 | SC6-4 (CA) | 48 x 60 | PORTABLE | 5 |
| 3 | C14 (CA) | 48 x 24 | 1 - 4 x 4 (S) | 3 |
| 4 | C23 (CA) | 48 X 24 | 1 - 4 x 4 (S) | 3 |

(S) DENOTES STATIONARY MOUNTED SIGN

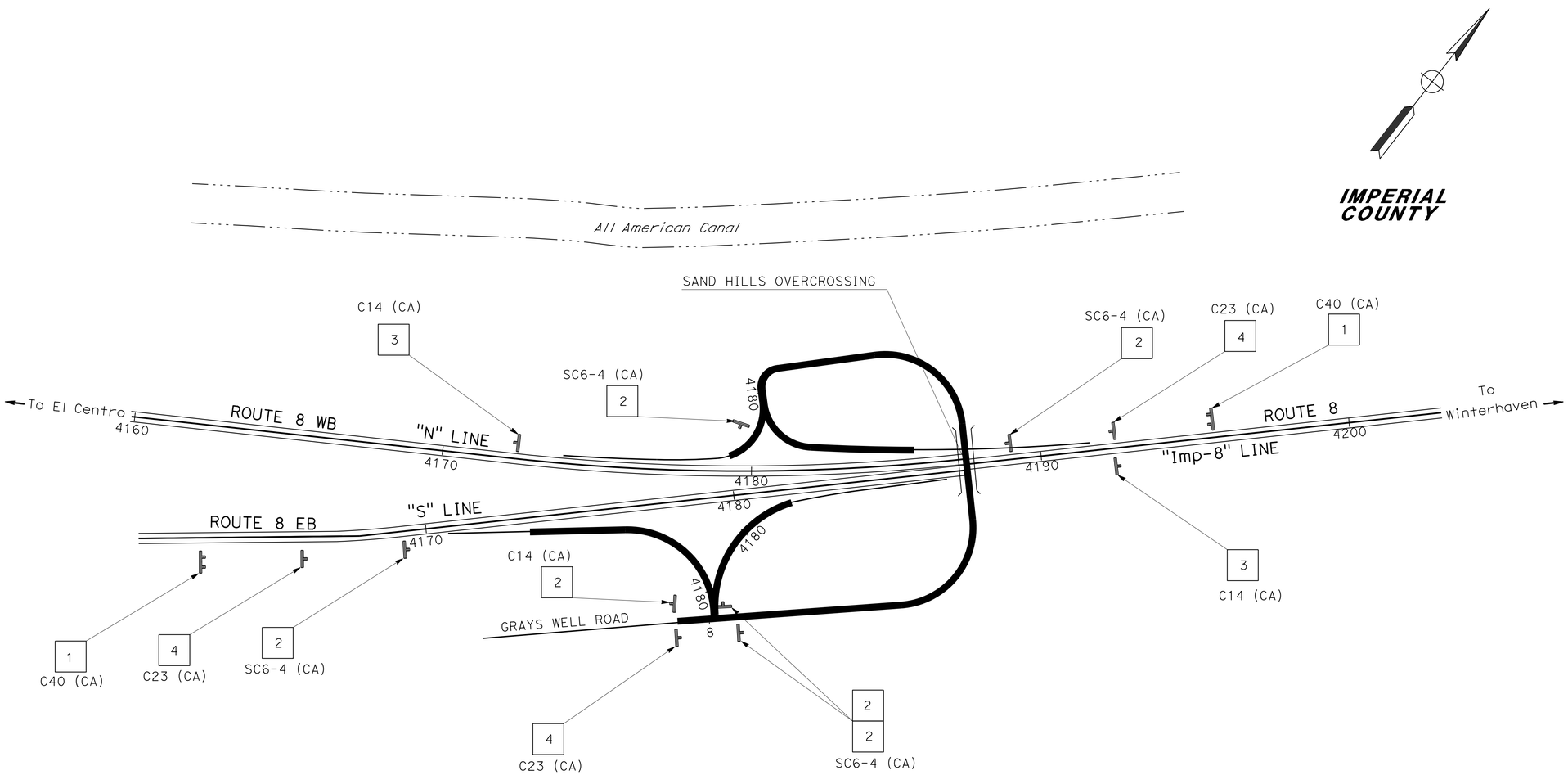


## CONSTRUCTION AREA SIGNS

NO SCALE

**CS-1**

*APPROVED FOR CONSTRUCTION AREA SIGN WORK ONLY*

STATE OF CALIFORNIA - DEPARTMENT OF TRANSPORTATION
Caltrans PROJECT DEVELOPMENT

FUNCTIONAL SUPERVISOR: KAZIM MAMDANI
CALCULATED-DESIGNED BY: JIM ALSHEIKH
CHECKED BY: MARVIN A. CANTON
REVISED BY
DATE REVISED

LAST REVISION 09-20-12
DATE PLOTTED => 10-DEC-2012
TIME PLOTTED => 14:20

| Dist | COUNTY | ROUTE | POST MILES TOTAL PROJECT | SHEET No. | TOTAL SHEETS |
|---|---|---|---|---|---|
| 11 | Imp | 8 | 80.5/80.9 | 10 | 14 |

09-10-12
REGISTERED CIVIL ENGINEER DATE

11-05-12
PLANS APPROVAL DATE

REGISTERED PROFESSIONAL ENGINEER
MARVIN A. CANTON
No. C69855
Exp. 09-30-14
CIVIL
STATE OF CALIFORNIA

*THE STATE OF CALIFORNIA OR ITS OFFICERS OR AGENTS SHALL NOT BE RESPONSIBLE FOR THE ACCURACY OR COMPLETENESS OF SCANNED COPIES OF THIS PLAN SHEET.*

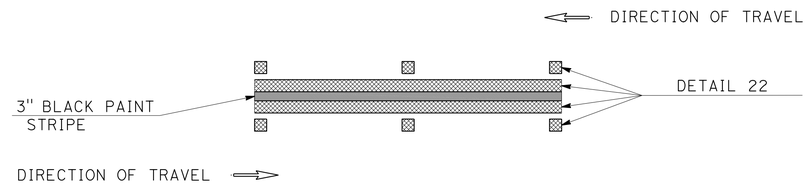


**DETAIL 22 (Mod)**

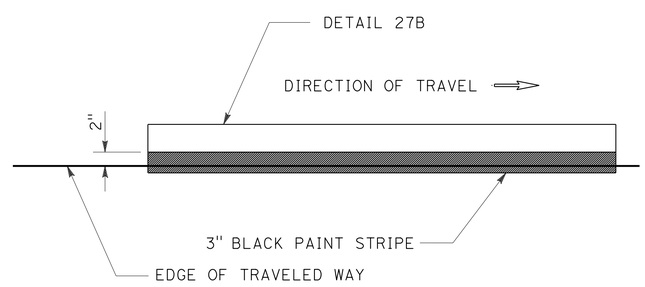


**DETAIL 27B (Mod)**

# PAVEMENT DELINEATION DETAILS

NO SCALE

**PDD-1**

STATE OF CALIFORNIA - DEPARTMENT OF TRANSPORTATION
Caltrans PROJECT DEVELOPMENT

FUNCTIONAL SUPERVISOR: KAZIM MAMDANI
CALCULATED-DESIGNED BY: JIM ALSHEIKH
CHECKED BY: MARVIN A. CANTON
REVISED BY
DATE REVISED

LAST REVISION 09-20-12 | DATE PLOTTED => 10-DEC-2012 | TIME PLOTTED => 14:20

| Dist | COUNTY | ROUTE | POST MILES TOTAL PROJECT | SHEET No. | TOTAL SHEETS |
|---|---|---|---|---|---|
| 11 | Imp | 8 | 80.5/80.9 | 11 | 14 |

REGISTERED CIVIL ENGINEER 09-10-12 DATE

11-05-12
PLANS APPROVAL DATE

REGISTERED PROFESSIONAL ENGINEER MARVIN CANTON No. C69855 Exp. 09-30-14 CIVIL STATE OF CALIFORNIA

*THE STATE OF CALIFORNIA OR ITS OFFICERS OR AGENTS SHALL NOT BE RESPONSIBLE FOR THE ACCURACY OR COMPLETENESS OF SCANNED COPIES OF THIS PLAN SHEET.*

## THERMOPLASTIC PAVEMENT MARKING

| LINE | ARROW TYPE I SQFT | ARROW TYPE V SQFT | ARROW TYPE III (B) SQFT | STOP SQFT | AHEAD SQFT | LIMIT LINE 12" SQFT | REMARKS |
|---|---|---|---|---|---|---|---|
| " SH1" | 31 | | | | | | REPLACE IN-KIND |
| " SH2" | | | 73 | 44 | 31 | 44 | REPLACE IN-KIND |
| | | | | | | | |
| " SH3" | 62 | | | | | | REPLACE IN-KIND |
| " SH4" | | 66 | | | | | REPLACE IN-KIND |
| | | | | | | | |
| SUB-TOTAL | 93 | 66 | 73 | 44 | 31 | 44 | |
| TOTAL | 351 | | | | | | |

## REMOVE PAVEMENT MARKER (N)

| ROUTE | STATION Beg | STATION END | NON-RECESSED TYPE A |
|---|---|---|---|
| 8 (Imp) | 19+04.80 | 21+09.80 | 20 |
| | | TOTAL | 20 |

## PAVEMENT DELINEATION QUANTITIES

| LINE | STATION Beg | STATION END | DIRECTION | DETAIL No. | PAINT TRAFFIC STRIPE (1-COAT) 3" BLACK SOLID LF | THERMOPLASTIC TRAFFIC STRIPE 4" WHITE SOLID LF | THERMOPLASTIC TRAFFIC STRIPE 4" YELLOW SOLID LF | PAVEMENT MARKER (RETROREFLECTIVE -RECESSED) TYPE D EA | PAVEMENT MARKER (RETROREFLECTIVE -RECESSED) TYPE H EA | PAVEMENT MARKER (RETROREFLECTIVE) TYPE D EA | DESCRIPTION/COMMENTS |
|---|---|---|---|---|---|---|---|---|---|---|---|
| "SH1" | 4177+13.60 | 4181+84.82 | EB | 25A | | | 472 | | 21 | | |
| | | | | 27B | | 472 | | | | | |
| | | | | | | | | | | | |
| "SH2" | 4173+35.69 | 4180+78.58 | EB | 25A | | | 743 | | 32 | | |
| | | | | 27B | | 743 | | | | | |
| | | | | | | | | | | | |
| "SH3" | 4179+30.00 | 4182+84.08 | WB | 25A | | | 355 | | 16 | | |
| | | | | 27B | | 355 | | | | | |
| | | | | | | | | | | | |
| "SH4" | 4178+94.97 | 4185+96.36 | WB | 25A | | | 702 | | 31 | | |
| | | | | 27B | | 702 | | | | | |
| | | | | | | | | | | | |
| "SHO" | 7+29.18 | 19+04.80 | EB/WB | 22 | | | 2,352 | 100 | | | L = 1176′ |
| | | | | 27B | | 2,352 | | | | | |
| | | | | | | | | | | | |
| "SHO" | 19+04.80 | 21+09.80 | EB/WB | 22 (Mod) | 205 | | 410 | | | 20 | L = 205′ |
| | | | | 27B (Mod) | 205 | 410 | | | | | |
| | | | | | | | | | | | |
| "SHO" | 21+09.80 | 28+51.50 | EB/WB | 22 | | | 1,484 | 64 | | | L = 742′ |
| | | | | 27B | | 1,484 | | | | | |
| | | | | | | | | | | | |
| | | | | SUBTOTAL | 410 | 6,518 | 6,518 | 164 | 100 | | |
| | | | | TOTAL | 410 | 13,036 | | 264 | | 20 | |

ALL PAVEMENT DELINEATION DETAILS TO BE REPLACED IN-KIND
(N) NOT A SEPARATE PAY ITEM. FOR INFORMATION ONLY.

# PAVEMENT DELINEATION QUANTITIES

## PDQ-1

REVISED BY | DATE REVISED
JIM ALSHEIKH | MARVIN CANTON
CALCULATED-DESIGNED BY | CHECKED BY
FUNCTIONAL SUPERVISOR
KAZIM MAMDANI

STATE OF CALIFORNIA - DEPARTMENT OF TRANSPORTATION
Caltrans PROJECT DEVELOPMENT

LAST REVISION 09-20-12 | DATE PLOTTED => 10-DEC-2012 | TIME PLOTTED => 14:21

| Dist | COUNTY | ROUTE | POST MILES TOTAL PROJECT | SHEET No. | TOTAL SHEETS |
|---|---|---|---|---|---|
| 11 | Imp | 8 | 80.5/80.9 | 12 | 14 |

REGISTERED CIVIL ENGINEER 09-10-12 DATE

11-05-12
PLANS APPROVAL DATE

REGISTERED PROFESSIONAL ENGINEER MARVIN A. CANTON No. C69855 Exp. 09-30-14 CIVIL STATE OF CALIFORNIA

*THE STATE OF CALIFORNIA OR ITS OFFICERS OR AGENTS SHALL NOT BE RESPONSIBLE FOR THE ACCURACY OR COMPLETENESS OF SCANNED COPIES OF THIS PLAN SHEET.*

## HMA DIKE

| L+/R+ | LINE | STATION | | REMOVE AC DIKE | | | PLACE HMA DIKE | | | MINOR HMA | ASPHALTIC EMULSION (FOG SEAL COAT) |
|---|---|---|---|---|---|---|---|---|---|---|---|
| | | BEGIN | END | TYPE | LENGTH (N) LF | ROADWAY EXCAVATION CY | TYPE C LF | TYPE E LF | TYPE F LF | TON | TON |
| R+ | "SH1" | 4177+13.60 | 4181+84.82 | E | 471.22 | 3.06 | | 471.22 | | 12.26 | 0.05 |
| R+ | "SH2" | 4173+35.69 | 4180+78.58 | E | 742.89 | 4.83 | | 742.89 | | 19.32 | 0.07 |
| L+ | "SH3" | 4179+30.00 | 4181+48.32 | E | 218.32 | 1.42 | | 218.32 | | 5.68 | 0.02 |
| L+ | "SH4" | 4178+94.97 | 4185+96.35 | E | 701.38 | 4.56 | | 701.38 | | 18.24 | 0.07 |
| L+ | "SH0" | 7+29.18 | 7+95.24 | E | 66.06 | 0.43 | | 66.06 | | 1.72 | 0.01 |
| L+ | "SH0" | 8+39.21 | 13+23.55 | E | 484.34 | 3.15 | | 484.34 | | 12.60 | 0.05 |
| L+ | "SH0" | 13+23.55 | 13+86.05 | E | 62.50 | 0.12 | 62.50 | | | 0.48 | 0.01 |
| L+ | "SH0" | 13+86.05 | 19+04.80 | F | 518.75 | 1.71 | | | 518.75 | 6.85 | 0.03 |
| L+ | "SH0" | 21+09.80 | 25+53.55 | F | 443.75 | 1.46 | | | 443.75 | 5.86 | 0.03 |
| L+ | "SH0" | 25+53.55 | 26+22.30 | E | 68.75 | 0.13 | 68.75 | | | 0.53 | 0.01 |
| L+ | "SH0" | 26+22.30 | 28+51.52 | E | 229.22 | 1.49 | | 229.22 | | 5.96 | 0.03 |
| | | | | TOTAL | 4,007.18 | 22.36 ** | 131.25 | 2,913.43 | 962.50 | 89.50 * | 0.38 ** |

* FOR ADDITIONAL QUANTITIES, SEE HMA OVERSIDE DRAIN TABLE.
** FOR ADDITIONAL QUANTITIES, SEE PAVEMENT STRUCTURE QUANTITIES AND/OR HMA OVERSIDE DRAIN TABLE.

## PAVEMENT STRUCTURE QUANTITIES

| LINE | STATION | | LENGTH | TRAVELED WAY WIDTH LF (N) | | SHOULDER WIDTH LF (N) INSIDE | | SHOULDER WIDTH LF (N) OUTSIDE | | AREA (N) | AC (N) DEPTH | ROADWAY EXCAVATION | HMA (TYPE C) | ASPHALTIC EMULSION (FOG SEAL COAT) | TACK COAT | REMARKS |
|---|---|---|---|---|---|---|---|---|---|---|---|---|---|---|---|---|
| | BEGIN | END | LF (N) | BEGIN | END | BEGIN | END | BEGIN | END | SQFT | FT | CY | TON | TON | TON | |
| "SH1" | 4177+13.60 | 4181+84.82 | 471.22 | 12 | 12 | 2 | 2 | 8 | 8 | 10,366.84 | 0.35 | 134.39 | 268.78 | 0.23 | 0.26 | |
| "SH1" ,"SH2" | | | | | | | | | | 434.87 | 0.35 | 5.64 | 11.28 | 0.00 | 0.02 | PAVED GORE |
| "SH1" ,"SH0" | | | | | | | | | | 528.08 | 0.35 | 6.85 | 13.70 | 0.00 | 0.02 | CURVE RETURN |
| "SH2" | 4173+35.69 | 4180+78.58 | 742.89 | 12 | 12 | 2 | 2 | 8 | 8 | 16,343.58 | 0.35 | 211.87 | 423.74 | 0.37 | 0.40 | |
| "SH2" ,"SH0" | | | | | | | | | | 614.95 | 0.35 | 7.98 | 15.96 | 0.00 | 0.02 | CURVE RETURN |
| "SH3" | 4179+30.00 | 4181+48.32 | 218.32 | 12 | 12 | 2 | 2 | 8 | 8 | 4,803.04 | 0.35 | 62.27 | 124.54 | 0.11 | 0.12 | |
| "SH3" | 4181+48.32 | 4182+84.08 | 135.76 | 12 | 12 | 0 | 0 | 8 | 4 | 2,443.68 | 0.35 | 31.68 | 63.36 | 0.03 | 0.06 | |
| "SH3","SH4" | | | | | | | | | | 372.80 | 0.35 | 4.84 | 9.68 | 0.00 | 0.01 | PAVED GORE |
| "SH3","SH4" | | | | | | | | | | 405.93 | 0.35 | 5.27 | 10.54 | 0.00 | 0.01 | TAPER AREA |
| "SH4" | 4178+94.97 | 4180+30.73 | 135.76 | 12 | 12 | 0 | 0 | 4 | 8 | 2,443.68 | 0.35 | 31.68 | 63.36 | 0.06 | 0.06 | |
| "SH4" | 4180+30.73 | 4185+96.36 | 565.63 | 12 | 12 | 2 | 2 | 8 | 8 | 12,443.86 | 0.35 | 161.31 | 322.62 | 0.28 | 0.31 | |
| "SH0" | 7+29.18 | 19+04.80 | 1,175.62 | 24 | 24 | 4 | 4 | 4 | 4 | 37,619.84 | 0.35 | 487.67 | 975.34 | 0.46 | 0.92 | |
| "SH0" | 21+09.80 | 28+51.50 | 741.70 | 24 | 24 | 4 | 4 | 4 | 4 | 23,734.40 | 0.35 | 307.67 | 615.34 | 0.29 | 0.58 | |
| | | | | | | | | | | | | | | | | |
| | | | | | | | | | | | | | | | | |
| | | | | | | | | | | | | | | | | |
| | | | | | | | | | | | TOTAL | 1,459.12 ** | 2,918.24 | 1.83 ** | 2.79 | |

** FOR ADDITIONAL QUANTITIES, SEE HMA DIKE TABLE AND HMA OVERSIDE DRAIN TABLE.
(N) NOT A SEPARATE PAY ITEM, FOR INFORMATION ONLY.

# SUMMARY OF QUANTITIES

# Q-1

STATE OF CALIFORNIA - DEPARTMENT OF TRANSPORTATION
Caltrans PROJECT DEVELOPMENT

FUNCTIONAL SUPERVISOR: KAZIM MAMDANI
CALCULATED-DESIGNED BY: JIM ALSHEIKH
CHECKED BY: MARVIN A. CANTON
REVISED BY
DATE REVISED

LAST REVISION 09-20-12
DATE PLOTTED => 10-DEC-2012
TIME PLOTTED => 14:21

| Dist | COUNTY | ROUTE | POST MILES TOTAL PROJECT | SHEET No. | TOTAL SHEETS |
|---|---|---|---|---|---|
| 11 | Imp | 8 | 80.5/80.9 | 13 | 14 |

REGISTERED CIVIL ENGINEER 09-10-12 DATE

11-05-12
PLANS APPROVAL DATE

REGISTERED PROFESSIONAL ENGINEER MARVIN A. CANTON No. C69855 Exp. 09-30-14 CIVIL STATE OF CALIFORNIA

*THE STATE OF CALIFORNIA OR ITS OFFICERS OR AGENTS SHALL NOT BE RESPONSIBLE FOR THE ACCURACY OR COMPLETENESS OF SCANNED COPIES OF THIS PLAN SHEET.*

## TEMPORARY DRAINAGE INLET PROTECTION

| LINE | STATION | EACH (TYPE 4A) |
|---|---|---|
| "SHO" | 24+00 Lt | 1 |
| "SHO" | 15+00 Lt | 1 |
| TOTAL | | 2 |

## METAL BEAM GUARD RAILING

| ⬡ MBGR No. | Lt / Rt | LINE | STATION | LAYOUT TYPE | EXISTING MBGR (N) (LF) | REMOVE METAL BEAM GUARD RAILING (LF) | RECONSTRUCT METAL BEAM GUARD RAILING (LF) | METAL BEAM GUARD RAILING (LF) | ALTERNATIVE FLARED TERMINAL SYSTEM (EA) | TRANSITION RAILING (TYPE WB) (EA) | MINOR CONCRETE (MINOR STRUCTURE) (CY) | ANCHOR BLOCK (N) | GUARD RAILING DELINEATOR (EA)* | REMARKS |
|---|---|---|---|---|---|---|---|---|---|---|---|---|---|---|
| 1 | Lt | "SHO" | 13+86.05 To 19+04.80 | 12BB | 481.25 | 37.50 | 450.00 | 43.75 | 1 | 1 | 1.55 | TYPE 1 | 22 | |
| 2 | Rt | "SHO" | 13+86.05 To 19+04.80 | 12B | 462.50 | 37.50 | 431.25 | 62.50 | 1 | 1 | 1.55 | TYPE 1 | 22 | |
| 3 | Rt | "SHO" | 21+09.80 To 23+66.05 | 12BB | 287.50 | 37.50 | 231.25 | 0.00 | 1 | 1 | 1.55 | TYPE 1 | 12 | |
| 4 | Lt | "SHO" | 21+09.80 To 25+53.55 | 12B | 387.50 | 37.50 | 356.25 | 62.50 | 1 | 1 | 1.55 | TYPE 1 | 20 | |
| TOTAL | | | | | | 150.00 | 1468.75 | 168.75 | 4 | 4 | 6.20 | | 76 | |

## HMA OVERSIDE DRAIN

| LOCATION | No. | LENGTH (N) | WIDTH (N) | PLACE HMA (Misc AREA) | MINOR HMA | ASPHALTIC EMULSION (FOG SEAL COAT) | REMARKS |
|---|---|---|---|---|---|---|---|
| | | (LF) | (LF) | SQYD | TON | TON | |
| "SHO" | 1 | 80.00 | 4.00 | 35.56 | 6.76 | 0.02 | REPLACE |
| "SH4" | 2 | 25.00 | 4.00 | 11.11 | 2.12 | 0.01 | REPLACE |
| "SHO" | 3 | 15.00 | 4.00 | 6.66 | 1.28 | 0.01 | REPLACE |
| "SHO" | 4 | 15.00 | 4.00 | 6.66 | 1.28 | 0.01 | REPLACE |
| "SH1" | 5 | 30.00 | 4.00 | 13.33 | 2.54 | 0.01 | REPLACE |
| "SHO" | 6 | 20.00 | 4.00 | 8.89 | 1.70 | 0.01 | REPLACE |
| "SH4" | 7 | 30.00 | 4.00 | 13.33 | 2.54 | 0.01 | NEW |
| | | | TOTAL | 95.54 | 18.22 ** | 0.08 *** | |

(N) NOT A PAY ITEM, FOR INFORMATION ONLY
* DELINEATOR TO BE PLACED AT EVERY 25' MAXIMUM SPACING OF RECONSTRUCTED MBGR.
** FOR ADDITIONAL QUANTITIES SEE HMA DIKE TABLE.
*** FOR ADDITIONAL QUANTITIES SEE HMA DIKE TABLE AND PAVEMENT STRUCTURE QUANTITIES.
SEE CONSTRUCTION DETAILS SHEETS FOR TYPE 1 ANCHOR BLOCK DETAILS.

## TRAFFIC HANDLING

| ⬡ MBGR No. | Lt / Rt | LINE | STATION | TEMPORARY RAILING (TYPE K) (LF) | TRAFFIC PLASTIC DRUM (EA) | ALTERNATIVE TEMPORARY CRASH CUSHION (EA) | REMARKS |
|---|---|---|---|---|---|---|---|
| 1 | Lt | "SHO" | 18+05.00 TO 18+45.00 | 40 | 6 | 1 | 20:1 TAPER |
| | Lt | "SHO" | 18+45.00 TO 21+65.00 | 320 | | | |
| | Lt | "SHO" | 21+65.00 TO 22+05.00 | 40 | 6 | 1 | 20:1 TAPER |
| 2 | Rt | "SHO" | 22+05.00 TO 21+65.00 | 40 | 6 | 1 | 20:1 TAPER |
| | Rt | "SHO" | 21+65.00 TO 18+45.00 | 320 | | | |
| | Rt | "SHO" | 18+45.00 TO 18+05.00 | 40 | 6 | 1 | 20:1 TAPER |
| TOTAL | | | | 800 | 24 | 4 | |

## SUMMARY OF QUANTITIES

NO SCALE

Q-2

REVISED BY | DATE REVISED
JIM ALSHEIKH | MARVIN A. CANTON
CALCULATED-DESIGNED BY | CHECKED BY
FUNCTIONAL SUPERVISOR: KAZIM MAMDANI
STATE OF CALIFORNIA - DEPARTMENT OF TRANSPORTATION
Caltrans PROJECT DEVELOPMENT

LAST REVISION 09-10-12 | DATE PLOTTED => 10-DEC-2012 | TIME PLOTTED => 14:29

| Dist | COUNTY | ROUTE | POST MILES TOTAL PROJECT | SHEET No. | TOTAL SHEETS |
|---|---|---|---|---|---|
| 11 | Imp | 8 | 80.5/80.9 | 14 | 14 |

REGISTERED CIVIL ENGINEER

April 20, 2012
PLANS APPROVAL DATE

Registered Professional Engineer — Roberta L. McLaughlin, No. C40375, Exp. 3-31-13, CIVIL, State of California

*THE STATE OF CALIFORNIA OR ITS OFFICERS OR AGENTS SHALL NOT BE RESPONSIBLE FOR THE ACCURACY OR COMPLETENESS OF SCANNED COPIES OF THIS PLAN SHEET.*

TO ACCOMPANY PLANS DATED 11-05-12

**2010 REVISED STANDARD PLAN RSP A24A**

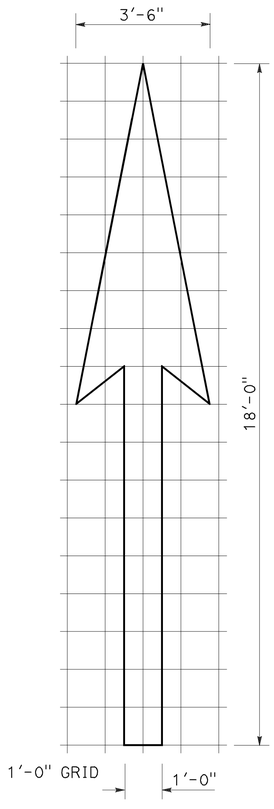


A=25 ft$^2$

TYPE I 18'-0" ARROW

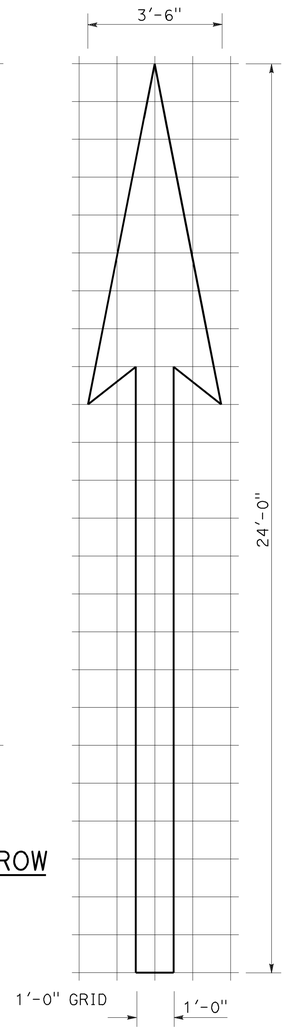


A=31 ft$^2$

TYPE I 24'-0" ARROW

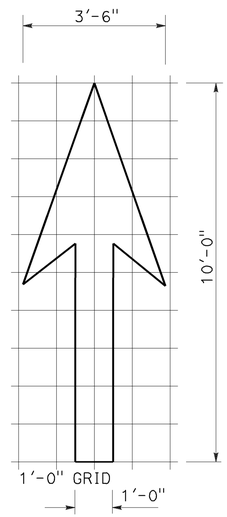


A=14 ft$^2$

TYPE I 10'-0" ARROW

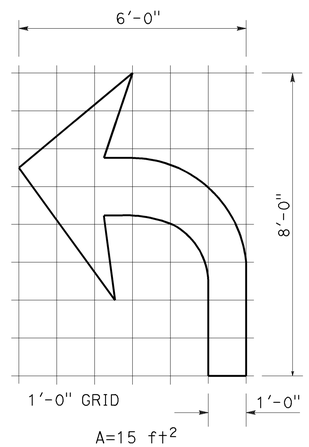


A=15 ft$^2$

TYPE IV (L) ARROW

(For Type IV (R) arrow, use mirror image)

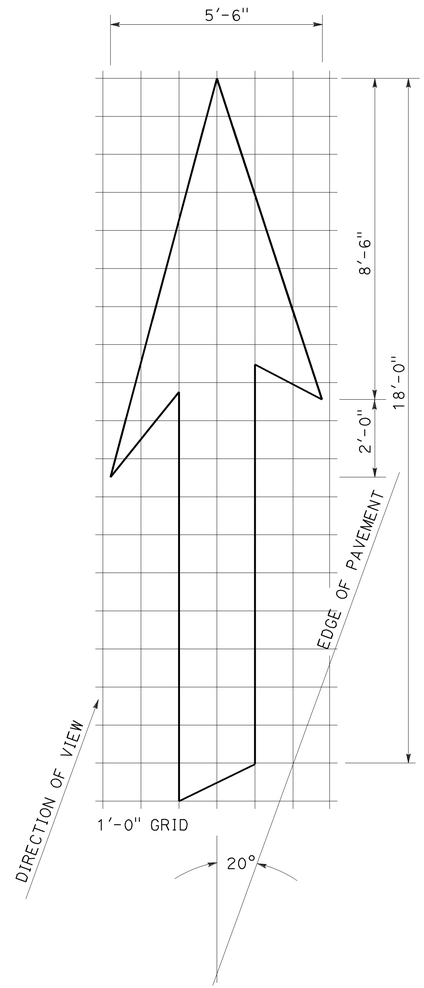


A=42 ft$^2$

TYPE VI ARROW

Right lane drop arrow
(For left lane, use mirror image)

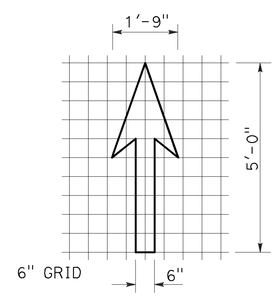


A=3.5 ft$^2$

BIKE LANE ARROW

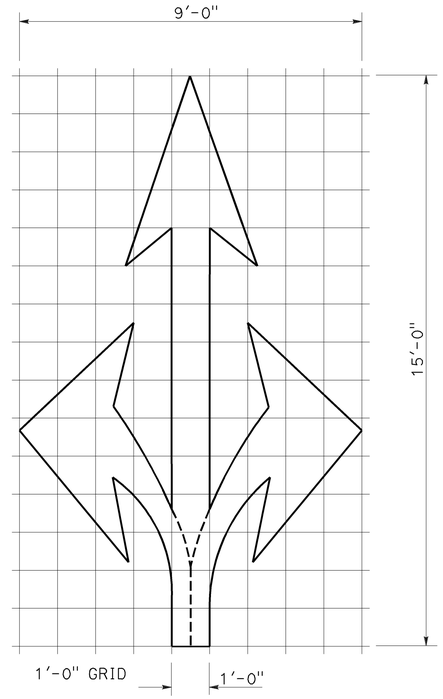


A=36 ft$^2$

TYPE VIII ARROW

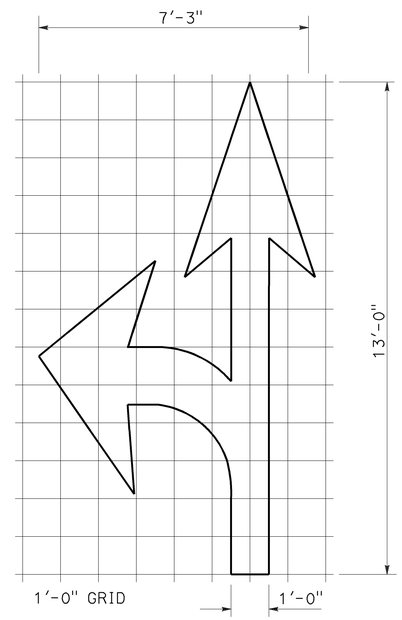


A=27 ft$^2$

TYPE VII (L) ARROW

(For Type VII (R) arrow, use mirror image)

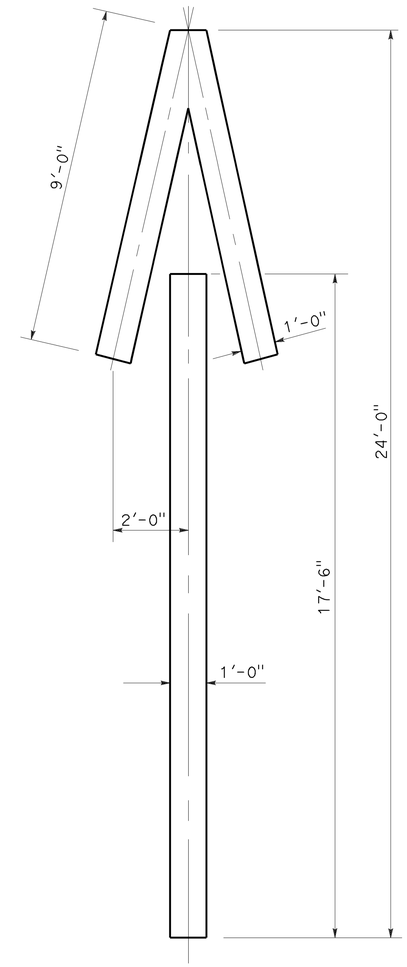


A=33 ft$^2$

TYPE V ARROW

NOTE:
Minor variations in dimensions may be accepted by the Engineer.

STATE OF CALIFORNIA
DEPARTMENT OF TRANSPORTATION

# PAVEMENT MARKINGS ARROWS

NO SCALE

RSP A24A DATED APRIL 20, 2012 SUPERSEDES STANDARD PLAN A24A DATED MAY 20, 2011 - PAGE 13 OF THE STANDARD PLANS BOOK DATED 2010.

**REVISED STANDARD PLAN RSP A24A**

3-14-12