Dist	COUNTY	ROUTE	POST MILES TOTAL PROJECT	SHEET No.	TOTAL SHEETS
11	Imp, SD	5,7,8,15, 52,etc.	Var	1	59

STATE OF CALIFORNIA

DEPARTMENT OF TRANSPORTATION

ACSTP-000C(422)E

PROJECT PLANS FOR CONSTRUCTION ON

STATE HIGHWAY

IN SAN DIEGO AND IMPERIAL COUNTIES AT VARIOUS LOCATIONS

TO BE SUPPLEMENTED BY STANDARD PLANS DATED 2010

INDEX OF PLANS

SHEET No.	DESCRIPTION
1	TITLE AND LOCATION MAP
2-3	LOCATIONS OF CONSTRUCTION
4	CONSTRUCTION AREA SIGNS
5-8	TRAFFIC HANDLING PLANS
9-12	SIGN DETAILS AND QUANTITIES
13	SUMMARY OF QUANTITIES
14-38	ELECTRICAL PLANS, DETAILS AND QUANTITIES
39-59	REVISED STANDARD PLANS

THE STANDARD PLANS LIST APPLICABLE TO THIS CONTRACT IS INCLUDED IN THE NOTICE TO BIDDERS AND SPECIAL PROVISIONS BOOK.

NOTE:
THE LOCATIONS OF CONSTRUCTION TABLES ARE SHOWN ON LC-1 & LC-2 SHEETS

LOCATION MAP

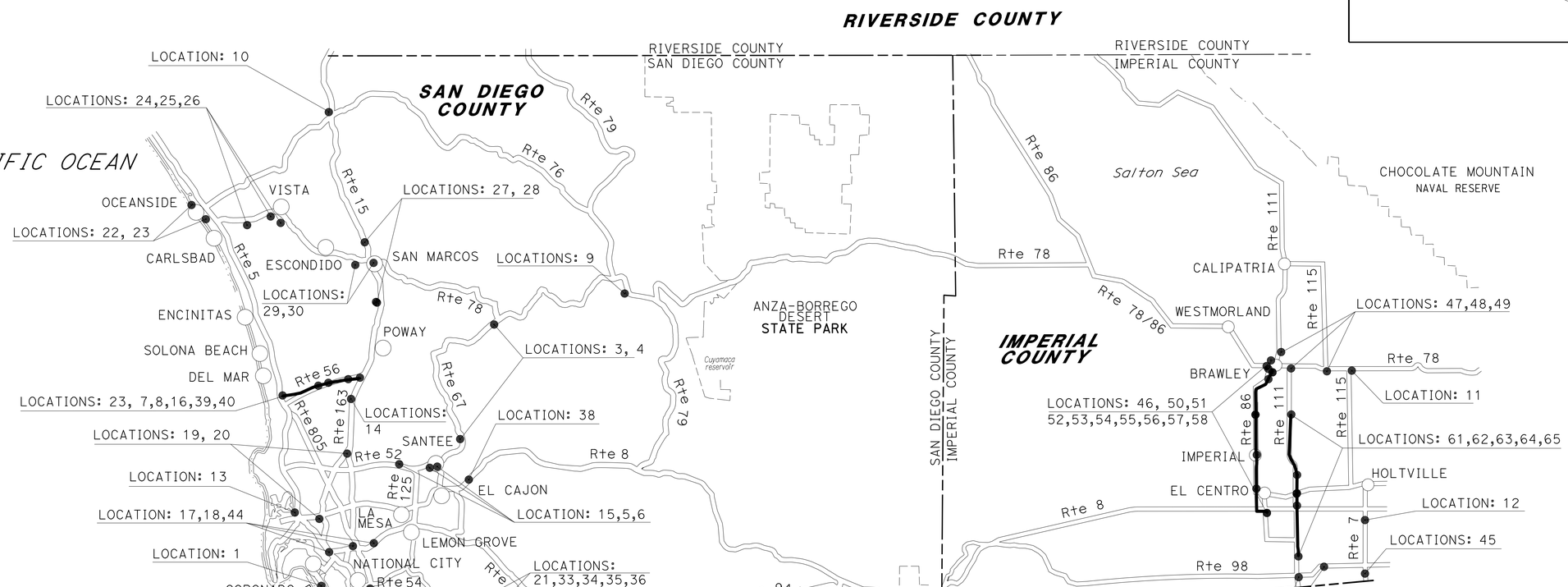

NO SCALE

THE CONTRACTOR SHALL POSSESS THE CLASS (OR CLASSES) OF LICENSE AS SPECIFIED IN THE "NOTICE TO BIDDERS."

PROJECT MANAGER: SHAHIN SEPASSI

DESIGN ENGINEER: KAZIM MAMDANI

Solomon Tadesse 10-02-15
PROJECT ENGINEER DATE
REGISTERED CIVIL ENGINEER

October 12, 2015
PLANS APPROVAL DATE

REGISTERED PROFESSIONAL ENGINEER SOLOMON TADESSE No. C62773 Exp. 06-30-16 CIVIL STATE OF CALIFORNIA

THE STATE OF CALIFORNIA OR ITS OFFICERS OR AGENTS SHALL NOT BE RESPONSIBLE FOR THE ACCURACY OR COMPLETENESS OF SCANNED COPIES OF THIS PLAN SHEET.

CONTRACT No.	11-416004
PROJECT ID	1113000046

LAST REVISION 10-12-15

DATE PLOTTED => 12-OCT-2015
TIME PLOTTED => 15:36

Dist	COUNTY	ROUTE	POST MILES TOTAL PROJECT	SHEET No.	TOTAL SHEETS
11	Imp, SD	5,7,8,15, 52,etc.	Var	2	59

REGISTERED CIVIL ENGINEER 10-02-15 DATE

10-12-15
PLANS APPROVAL DATE

REGISTERED PROFESSIONAL ENGINEER SOLOMON TADESSE No. C62773 Exp. 06-30-16 CIVIL STATE OF CALIFORNIA

THE STATE OF CALIFORNIA OR ITS OFFICERS OR AGENTS SHALL NOT BE RESPONSIBLE FOR THE ACCURACY OR COMPLETENESS OF SCANNED COPIES OF THIS PLAN SHEET.

NOTE.

DATUM REFERENCE: NAD83

LOCATIONS OF CONSTRUCTION

Loc	Co	Rte	PM	LONGITUDE	LATITUDE	ADDITIONAL LOCATION INFORMATION
1	SD	75	17.400	32.65387	-117.15175	NB Rte 75 NORTH OF FIDDLER'S COVE MARINA
2	SD	54	1.830	32.65997	-117.07096	WB Rte 54, JUST BEFORE THE CONNECTOR TO THE NB Rte 805
3	SD	67	6.960	32.87756	-116.92534	SB Rte 67, NORTH OF WILLOW Rd
4	SD	67	15.200	32.98312	-116.97484	SB Rte 67 NORTH OF POWAY Rd
5	SD	52	13.300	32.84460	-117.02593	WB Rte 52, EAST OF MAST Blvd, NE SIDE OF THE BRIDGE
6	SD	52	16.700	32.83263	-116.97428	EB Rte 52, WEST OF COTTONWOOD UNDERCROSSING
7	SD	56	8.540	32.96211	-117.10349	WB Rte 56 WEST OF Rte 15
8	SD	56	4.530	32.96651	-117.17763	ON RANCHO SANTA FE FARMS Rd, NE CORNER OF THE BRIDGE
9	SD	78	54.670	33.08854	-116.64621	EB Rte 78, EAST OF CALICO RANCH Rd BETWEEN THE TOWNS OF SANTA YSABEL AND JULIAN
10	SD	76	32.720	33.28871	-116.96122	EB Rte 76, WEST OF RINCON Rd, NEXT TO THE FIRE STATION
11	Imp	78	21.220	32.97458	-115.39840	WB Rte 78, EAST OF THE JUNCTION OF Rte 115
12	Imp	7	06.344	32.76794	-115.38329	SOUTH OF Rte 8 ON THE EAST SIDE AT BOTTOM OF THE HILL
13	SD	8	0.210	32.75875	-117.20055	WEST END OF CALTRANS' DISTRICT OFFICE PARKING LOT
14	SD	15	27.210	33.07288	-117.07044	IN THE DEL LAGO BUS TRANSPORTATION TERMINAL
15	SD	52	17.270	32.83247	-116.96428	AT MAGNOLIA Ave, UNDER THE NB Rte 67 TO WB Rte 52 INTERCHANGE
16	SD	56	9.710	32.96465	-117.09712	WB Rte 56, WEST OF Rte 15
17	SD	94	1.470	32.71383	-117.14682	WB Rte 94 OFF-RAMP TO F St BEFORE THE Rte 5 BRIDGE
18	SD	94	3.980	32.71925	-117.10461	NB Rte 805 CONNECTOR TO WB Rte 94, RIGHT SIDE ON THE HILL
19	SD	163	3.630	32.76171	-117.16383	SB Rte 163 TO EB Rte 8 ON-RAMP, INSIDE OF THE LOOP
20	SD	163	10.930	32.85496	-117.11763	NB Rte 163 IN THE CALTRAN'S KEARNY VILLA MAINTENANCE YARD
21	SD	905	10.980	32.56044	-116.94391	EB Rte 905, ACCESS AT AIRWAY Rd
22	SD	5	49.190	33.14744	-117.33357	NB Rte 5, SOUTH OF CHINQUAPIN Ave OC
23	SD	5	30.390	32.90012	-117.22444	NB Rte 5, SOUTH OF ROSELLE St
24	SD	78	1.000	33.18097	-117.33543	EB Rte 78, WEST OF EL CAMINO REAL OFF-RAMP
25	SD	78	8.010	33.17736	-117.22761	WB Rte 78, EAST OF MAR VISTA Dr
26	SD	78	5.940	33.19406	-117.25922	EB Rte 78, WEST OF MELROSE Dr
27	SD	15	30.390	33.11243	-117.09685	NB Rte15, SOUTH OF WEST VALLEY Pkwy, JUST OFF THE MBGR
28	SD	15	32.530	33.14198	-117.10512	SB Rte15, NEAR THE ON-RAMP FROM WEST EL NORTE Pkwy
29	SD	78	14.540	33.13654	-117.13678	EB Rte 78, WEST OF MISSION Rd
30	SD	78	17.610	33.13276	-117.08757	WB Rte 78, WEST OF BROADWAY, BEHIND THE DITCH
31	SD	805	0.150	32.54660	-117.03535	NB Rte 805 SOUTH OF THE 805 & 5 SEPARATION
32	SD	805	3.690	32.59519	-117.03659	SB Rte 805, NORTH OF MAIN St
33	SD	905	3.640	32.56790	-117.06638	EB Rte 905, EAST OF HOWARD Ave
34	SD	905	3.840	32.56828	-117.06274	EB Rte 905, ON THE MEDIAN EAST OF BEYER Blvd
35	SD	905	4.670	32.56855	-117.04901	WB Rte 905, EAST OF PICADOR Blvd
36	SD	905	7.070	32.56656	-117.00852	WB Rte 905, EAST OF CALIENTE Ave
37	SD	5	4.480	32.58158	-117.08706	SB Rte 5 SOUTH OF PALM Ave
38	SD	8	19.420	32.81964	-116.91010	EB Rte 8, 0.75 MILE WEST OF LOS COCHES Rd
39	SD	56	9.710	32.96450	-117.09731	WB Rte 56 JUST WEST OF Rte 15
40	SD	56	4.860	32.96728	-117.17186	WB Rte 56, 0.35 MILES EAST OF RANCHO SANTA FE FARMS Rd
41	SD	75	9.310	32.58402	-117.09274	Rte 75 AT SATURN Ave
42	SD	75	9.710	32.58369	-117.09954	Rte 75 AT 16TH STREET
43	SD	75	10.070	32.58404	-117.10599	Rte 75 AT 13TH STREET

REVISED BY | DATE REVISED
ARY JAFF | SOLOMON TADESSE
CALCULATED-DESIGNED BY | CHECKED BY
FUNCTIONAL SUPERVISOR | KAZIM MAMDANI
STATE OF CALIFORNIA - DEPARTMENT OF TRANSPORTATION
Caltrans® PROJECT DEVELOPMENT

LOCATIONS OF CONSTRUCTION

LC-1

LAST REVISION 10-12-15 | DATE PLOTTED => 12-OCT-2015 TIME PLOTTED => 15:36

Dist	COUNTY	ROUTE	POST MILES TOTAL PROJECT	SHEET No.	TOTAL SHEETS
11	Imp, SD	5,7,8,15, 52,etc.	Var	3	59

REGISTERED CIVIL ENGINEER 10-02-15 DATE

10-12-15
PLANS APPROVAL DATE

REGISTERED PROFESSIONAL ENGINEER SOLOMON TADESSE No. C62773 Exp. 06-30-16 CIVIL STATE OF CALIFORNIA

THE STATE OF CALIFORNIA OR ITS OFFICERS OR AGENTS SHALL NOT BE RESPONSIBLE FOR THE ACCURACY OR COMPLETENESS OF SCANNED COPIES OF THIS PLAN SHEET.

LOCATIONS OF CONSTRUCTION

Loc	Co	Rte	PM	LONGITUDE	LATITUDE	ADDITIONAL LOCATION INFORMATION
44	SD	94	3.650	32.71980	-117.11050	Rte 94 EB at HOME Ave & FEDERAL
45	Imp	7	0.220	32.68258	-115.38923	ROUTE 7 AT MENVIELLE Rd
46	Imp	8	37.821	32.77303	-115.55240	Rte 8 EB AT 4TH St
47	Imp	111	23.790	33.00262	-115.52625	OLD 111 @ DEL RIO Pl & WB 78
48	Imp	111	23.670	32.99906	-115.52631	OLD 111 @ SHANK Rd & EB 78
49	Imp	78	15.49	32.97849	-115.50182	Rte 78 AT Rte 111
50	Imp	86	5.830	32.77137	-115.55206	Rte 86 AT WAKE Ave
51	Imp	86	7.930	32.80586	-115.56961	Rte 86 AT PICO Ave
52	Imp	86	11.300	32.85450	-115.56917	Rte 86 AT 15TH STREET
53	Imp	86	15.320	32.91263	-115.57050	Rte 86 AT KEYSTONE Rd
54	Imp	86	19.470	32.96363	-115.54814	Rte 86 AT WILDCAT Dr
55	Imp	86	20.070	32.97101	-115.54376	Rte 86 AT MALAN St
56	Imp	86	20.270	32.97319	-115.54136	Rte 86 AT K St
57	Imp	86	20.980	32.97852	-115.54784	Rte 86 AT RIO VISTA ROAD
58	Imp	86	20.750	32.97885	-115.54374	WESTERN AVENUE
59	Imp	98	33.730	32.67978	-115.47429	Rte 98 AT EAST RIVERA Dr
60	Imp	98	35.200	32.69357	-115.45579	Rte 98 AT COLE ROAD
61	Imp	111	3.200	32.70866	-115.49911	Rte 111 AT JASPER Rd
62	Imp	111	8.260	32.78158	-115.50114	Rte 111 AT ROSS Rd
63	Imp	111	9.500	32.79950	-115.50091	Rte 111 AT EVAN HEWES Hwy
64	Imp	111	11.310	32.82564	-115.50047	Rte 111 AT ATEN Rd
65	Imp	111	17.410	32.91293	-115.50937	Rte 111 AT KEYSTONE Rd

REVISED BY | DATE REVISED
ARY JAFF | SOLOMON TADESSE
CALCULATED-DESIGNED BY | CHECKED BY
FUNCTIONAL SUPERVISOR | KAZIM MAMDANI

STATE OF CALIFORNIA - DEPARTMENT OF TRANSPORTATION
Caltrans® PROJECT DEVELOPMENT

LOCATIONS OF CONSTRUCTION

LC-2

LAST REVISION 10-12-15 | DATE PLOTTED => 12-OCT-2015 | TIME PLOTTED => 15:36

Dist	COUNTY	ROUTE	POST MILES TOTAL PROJECT	SHEET No.	TOTAL SHEETS
11	Imp, SD	5,7,8,15, 52,etc.	Var	4	59

REGISTERED CIVIL ENGINEER 10-02-15 DATE

10-12-15
PLANS APPROVAL DATE

REGISTERED PROFESSIONAL ENGINEER NOEL TAPIA No. 81028 Exp. 09-30-17 CIVIL STATE OF CALIFORNIA

THE STATE OF CALIFORNIA OR ITS OFFICERS OR AGENTS SHALL NOT BE RESPONSIBLE FOR THE ACCURACY OR COMPLETENESS OF SCANNED COPIES OF THIS PLAN SHEET.

NOTES:

1. EXACT LOCATION OF CONSTRUCTION AREA SIGNS WILL BE DETERMINED BY THE ENGINEER.
2. SEE TRAFFIC HANDLING PLANS FOR ADDITIONAL CONSTRUCTION AREA SIGNS.
3. FEDERAL MANUAL ON UNIFORM TRAFFIC CONTROL DEVICES (MUTCD) SIGN CODES ARE SHOWN UNLESS DESIGNATED BY (CA), INDICATING CALIFORNIA MUTCD.
4. EXISTING UTILITIES ARE NOT SHOWN ON THESE PLAN SHEETS. THE CONTRACTOR SHALL VERIFY LOCATIONS OF EXISTING UTILITIES AND ADJUST THE FIELD LOCATION OF THE SIGN POSTS IN CONSULTATION WITH THE ENGINEER.

LEGEND:

(XX) = CONSTRUCTION AREA SIGNS

TYPICAL - CONSTRUCTION AREA SIGN PLACEMENT ON INTERSECTING STREETS

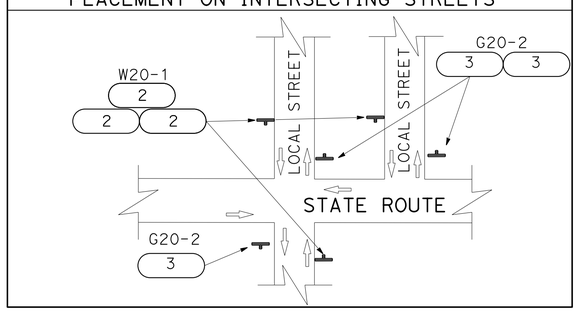

TYPICAL-CONSTRUCTION AREA SIGN PLACEMENT

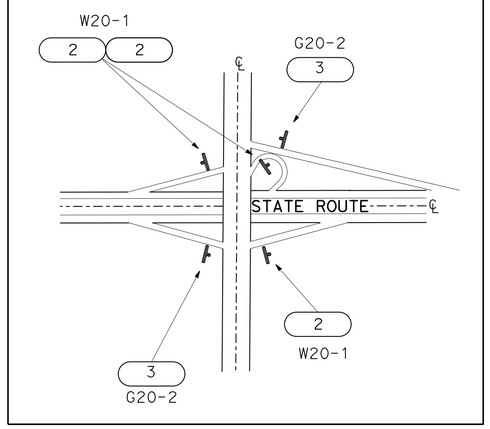

CONSTRUCTION AREA SIGNS

SIGN No.	CODE	PANEL SIZE (INCH)	No. OF POST AND SIZE (INCH)	No. OF SIGNS
1	C40 (CA)	144" x 60"	2 - 4 X 6 (S)	21
2	W20-1	48" x 48"	1 - 4 X 6 (S)	185
3	G20-2	36" x 18"	1 - 4 X 4 (S)	187
4	SC6-4 (CA)	48" x 60"	1 - 6 X 6 (S)	32

(S) DENOTES STATIONARY MOUNTED SIGN

TYPICAL - PLACEMENT OF CONSTRUCTION AREA SIGNS

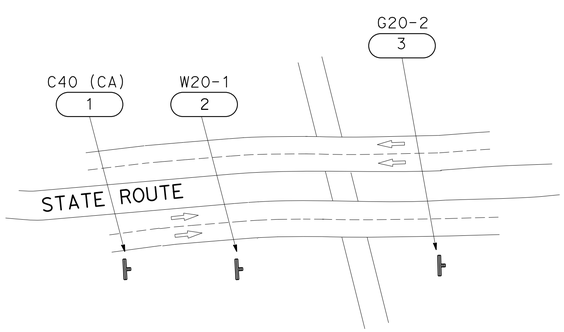

TYPICAL- PLACEMENT OF SC6-4 (CA) CONSTRUCTION AREA SIGNS

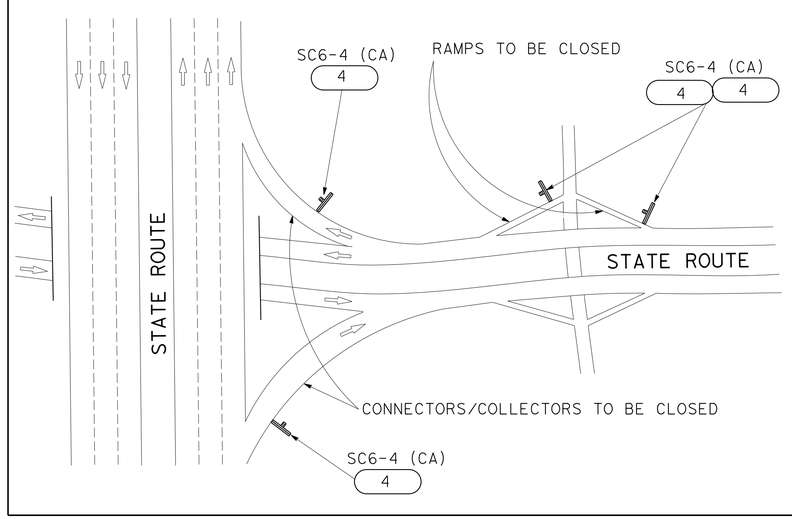

APPROVED FOR CONSTRUCTION AREA SIGN WORK ONLY

NO SCALE

CONSTRUCTION AREA SIGNS

CS-1

STATE OF CALIFORNIA - DEPARTMENT OF TRANSPORTATION
Caltrans® TRAFFIC DESIGN

FUNCTIONAL SUPERVISOR: CAMILLE ABOU FADEL
CALCULATED-DESIGNED BY: IRAM SYED
CHECKED BY: NOEL TAPIA
REVISED BY
DATE REVISED

LAST REVISION 10-12-15
DATE PLOTTED => 12-OCT-2015
TIME PLOTTED => 15:36

Dist	COUNTY	ROUTE	POST MILES TOTAL PROJECT	SHEET No.	TOTAL SHEETS
11	Imp, SD	5,7,8,15, 52,etc.	Var	5	59

REGISTERED CIVIL ENGINEER 10-02-15 DATE

10-12-15
PLANS APPROVAL DATE

REGISTERED PROFESSIONAL ENGINEER NOEL TAPIA No. 81028 Exp. 09-30-17 CIVIL STATE OF CALIFORNIA

THE STATE OF CALIFORNIA OR ITS OFFICERS OR AGENTS SHALL NOT BE RESPONSIBLE FOR THE ACCURACY OR COMPLETENESS OF SCANNED COPIES OF THIS PLAN SHEET.

NOTES:

1. EXACT LOCATION OF CONSTRUCTION AREA SIGNS WILL BE DETERMINED BY THE ENGINEER.
2. FEDERAL MANUAL ON UNIFORM TRAFFIC CONTROL DEVICES (MUTCD) SIGN CODES ARE SHOWN UNLESS DESIGNATED BY (CA), INDICATING CALIFORNIA MUTCD.
3. SEE CONSTRUCTION AREA SIGN PLANS FOR ADDITIONAL CONSTRUCTION AREA SIGNS.
4. EXISTING UTILITIES ARE NOT SHOWN ON THESE PLAN SHEETS. THE CONTRACTOR SHALL VERIFY LOCATIONS OF EXISTING UTILITIES AND ADJUST THE FIELD LOCATION OF SIGN POSTS IN CONSULTATION WITH THE ENGINEER.
5. ROTATE ARROW ON SC9 (CA) PANEL TO REFLECT DIRECTION OF DETOUR.

CONSTRUCTION AREA SIGNS

SIGN No.	TYPE	PANEL SIZE (In)x(In)	No. OF POST AND SIZE (In)x(In)	No. OF SIGNS
D	SC9 (CA)	48 X 48	1-4 X 6 (s)	35
M	M4-8a	24 X 18	PORTABLE	4
1	SPCL-1	72 X 72	2-6 X 6 (s)	2
2	SPCL-2	72 X 72	2-6 X 6 (s)	6
3	SPCL-3	72 X 72	2-6 X 6 (s)	2
4	SPCL-4	72 X 72	2-6 X 6 (s)	2

(s) DENOTES STATIONARY MOUNTED SIGN

LEGEND:

X - CONSTRUCTION AREA SIGN
⇨ - DIRECTION OF TRAFFIC
Caps - CAPITAL LETTERING
SPCL - SPECIAL CONSTRUCTION AREA SIGN

SIGN #1

SPCL-1 8" Caps

ROUTE 86
USE
DETOUR

72" 72"

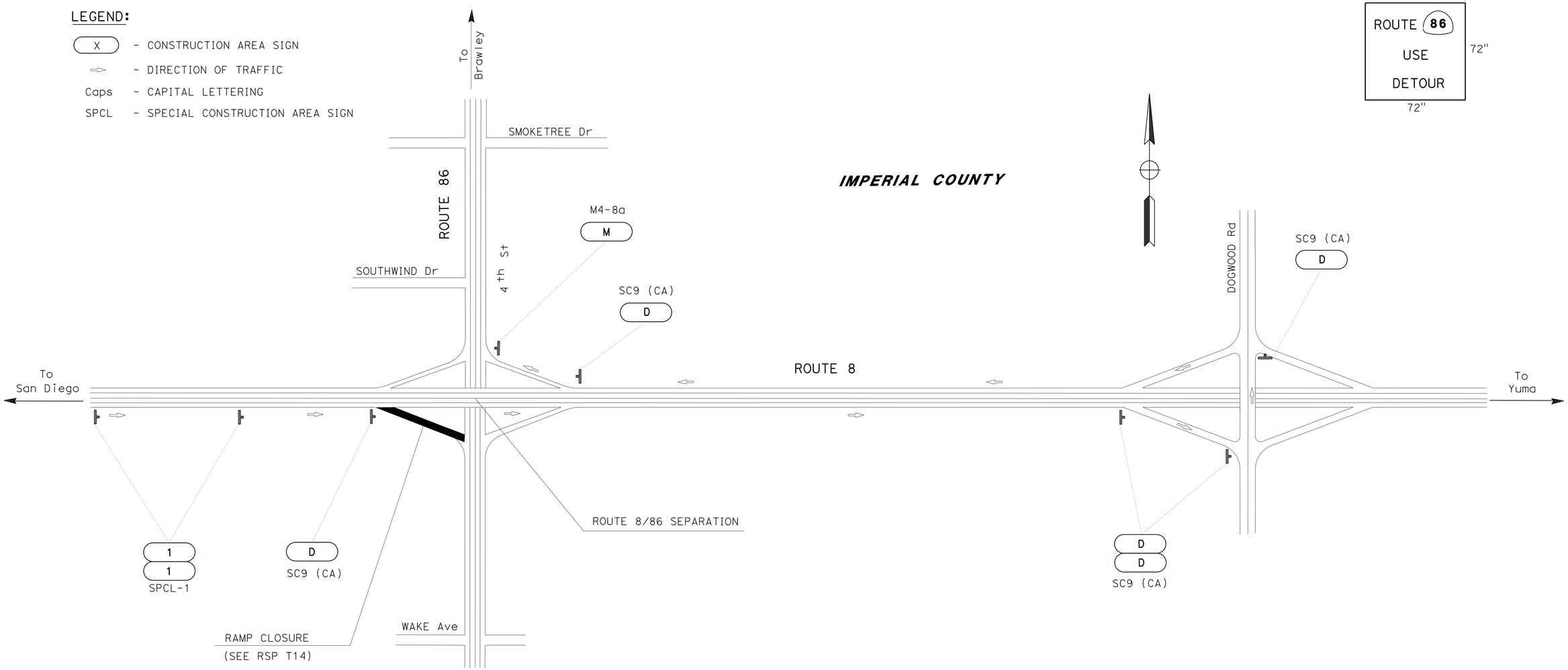

EB ROUTE 8 TO ROUTE 86

TRAFFIC HANDLING PLAN

NO SCALE

TH-1

APPROVED FOR TRAFFIC HANDLING WORK ONLY

STATE OF CALIFORNIA - DEPARTMENT OF TRANSPORTATION
Caltrans® TRAFFIC DESIGN

FUNCTIONAL SUPERVISOR: CAMILLE ABOU-FADEL
CALCULATED-DESIGNED BY: PARVIS NAHAVANDIAN
CHECKED BY: NOEL TAPIA
REVISED BY
DATE REVISED

LAST REVISION 10-12-15
DATE PLOTTED => 12-OCT-2015
TIME PLOTTED => 15:36

Dist	COUNTY	ROUTE	POST MILES TOTAL PROJECT	SHEET No.	TOTAL SHEETS
11	Imp, SD	5,7,8,15, 52,etc.	Var	6	59

REGISTERED CIVIL ENGINEER 10-02-15 DATE

10-12-15
PLANS APPROVAL DATE

REGISTERED PROFESSIONAL ENGINEER
NOEL TAPIA
No. 81028
Exp. 09-30-17
CIVIL
STATE OF CALIFORNIA

THE STATE OF CALIFORNIA OR ITS OFFICERS OR AGENTS SHALL NOT BE RESPONSIBLE FOR THE ACCURACY OR COMPLETENESS OF SCANNED COPIES OF THIS PLAN SHEET.

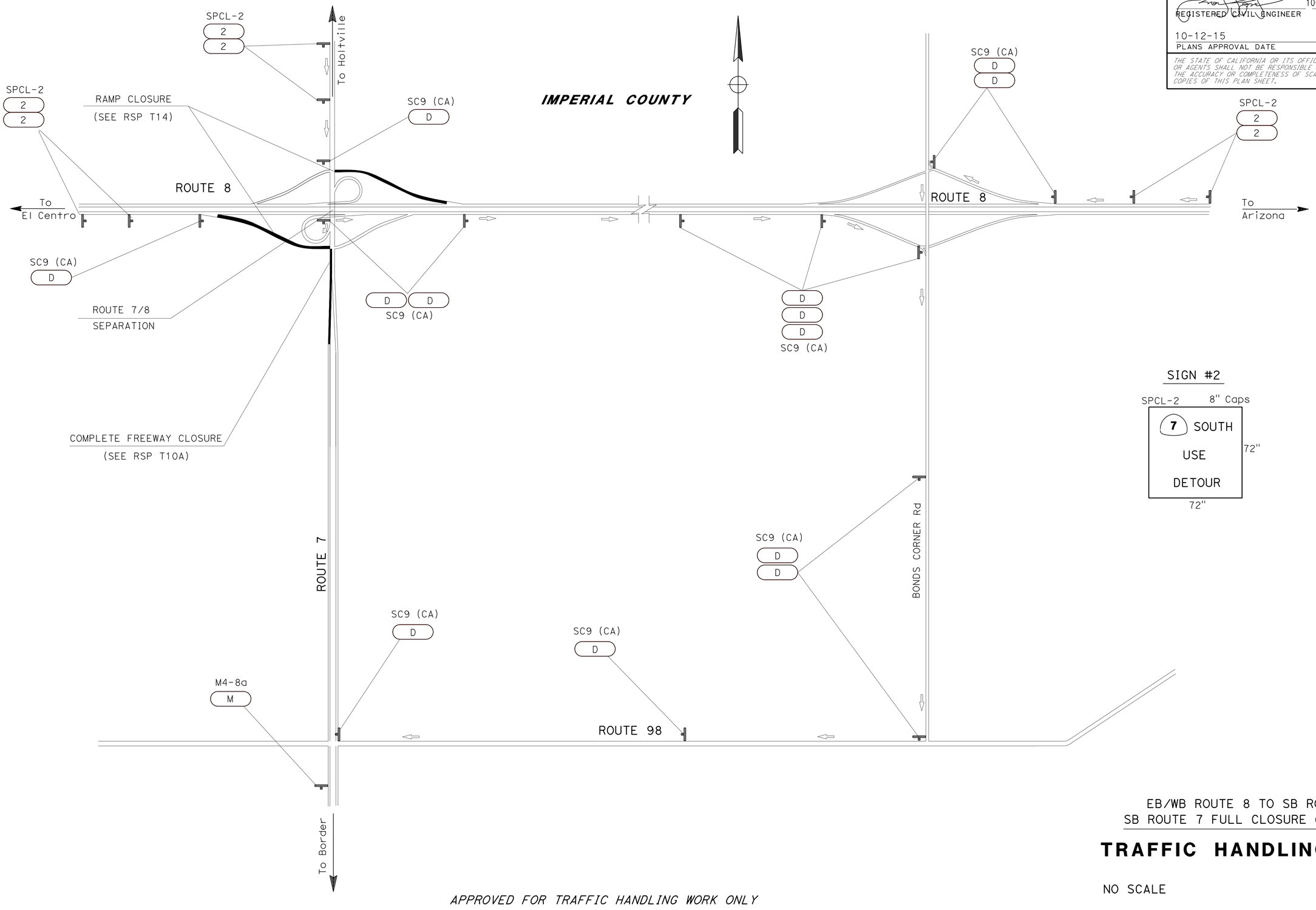

SIGN #2

SPCL-2 8" Caps

7 SOUTH
USE
DETOUR

72" 72"

EB/WB ROUTE 8 TO SB ROUTE 7
SB ROUTE 7 FULL CLOSURE @ ROUTE 8

TRAFFIC HANDLING PLAN

NO SCALE

TH-2

APPROVED FOR TRAFFIC HANDLING WORK ONLY

STATE OF CALIFORNIA - DEPARTMENT OF TRANSPORTATION
Caltrans
TRAFFIC DESIGN

FUNCTIONAL SUPERVISOR: CAMILLE ABOU-FADEL
CALCULATED-DESIGNED BY: PARVIS NAHAVANDIAN
CHECKED BY: NOEL TAPIA
REVISED BY
DATE REVISED

LAST REVISION 10-12-15
DATE PLOTTED => 12-OCT-2015
TIME PLOTTED => 15:36

Dist	COUNTY	ROUTE	POST MILES TOTAL PROJECT	SHEET No.	TOTAL SHEETS
11	Imp, SD	5,7,8,15, 52,etc.	Var	7	59

REGISTERED CIVIL ENGINEER 10-02-15 DATE

10-12-15
PLANS APPROVAL DATE

REGISTERED PROFESSIONAL ENGINEER
NOEL TAPIA
No. 81028
Exp. 09-30-17
CIVIL
STATE OF CALIFORNIA

THE STATE OF CALIFORNIA OR ITS OFFICERS OR AGENTS SHALL NOT BE RESPONSIBLE FOR THE ACCURACY OR COMPLETENESS OF SCANNED COPIES OF THIS PLAN SHEET.

IMPERIAL BEACH

SIGN #3

SPCL-3 8" Caps

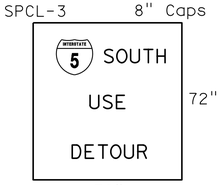

SB ROUTE 75 TO SB ROUTE 5

TRAFFIC HANDLING PLAN

NO SCALE

TH-3

APPROVED FOR TRAFFIC HANDLING WORK ONLY

STATE OF CALIFORNIA - DEPARTMENT OF TRANSPORTATION
Caltrans
TRAFFIC DESIGN

FUNCTIONAL SUPERVISOR: CAMILLE ABOU-FADEL

CALCULATED-DESIGNED BY: PARVIS NAHAVANDIAN
CHECKED BY: NOEL TAPIA

REVISED BY
DATE REVISED

LAST REVISION 10-12-15
DATE PLOTTED => 12-OCT-2015
TIME PLOTTED => 15:36

Dist	COUNTY	ROUTE	POST MILES TOTAL PROJECT	SHEET No.	TOTAL SHEETS
11	Imp, SD	5,7,8,15, 52,etc.	Var	8	59

REGISTERED CIVIL ENGINEER 10-02-15 DATE

10-12-15
PLANS APPROVAL DATE

REGISTERED PROFESSIONAL ENGINEER
NOEL TAPIA
No. 81028
Exp. 09-30-17
CIVIL
STATE OF CALIFORNIA

THE STATE OF CALIFORNIA OR ITS OFFICERS OR AGENTS SHALL NOT BE RESPONSIBLE FOR THE ACCURACY OR COMPLETENESS OF SCANNED COPIES OF THIS PLAN SHEET.

SIGN #4

SPCL-4 8" Caps

8 EAST
USE
DETOUR

72" 72"

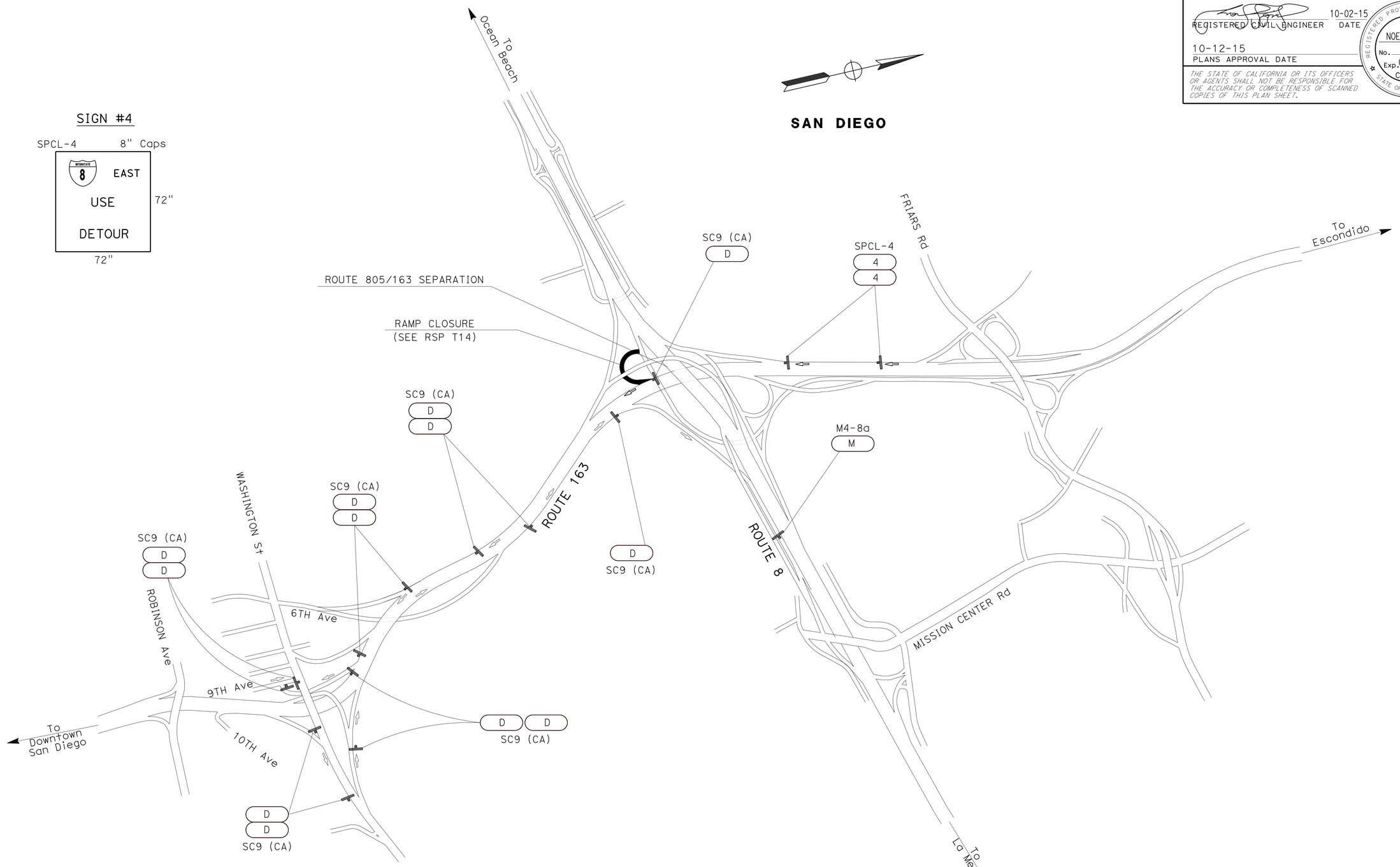

SB ROUTE 163 TO EB ROUTE 8

TRAFFIC HANDLING PLAN

NO SCALE

TH-4

APPROVED FOR TRAFFIC HANDLING WORK ONLY

STATE OF CALIFORNIA - DEPARTMENT OF TRANSPORTATION
Caltrans® **TRAFFIC DESIGN**

FUNCTIONAL SUPERVISOR: CAMILLE ABOU-FADEL
CALCULATED-DESIGNED BY: PARVIS NAHAVANDIAN
CHECKED BY: NOEL TAPIA
REVISED BY
DATE REVISED

LAST REVISION 10-12-15
DATE PLOTTED => 12-OCT-2015
TIME PLOTTED => 15:36

Dist	COUNTY	ROUTE	POST MILES TOTAL PROJECT	SHEET No.	TOTAL SHEETS
11	Imp, SD	5,7,8,15, 52,etc.	Var	9	59

REGISTERED CIVIL ENGINEER 10-02-15 DATE

10-12-15
PLANS APPROVAL DATE

REGISTERED PROFESSIONAL ENGINEER
NOEL TAPIA
No. 81028
Exp. 09-30-17
CIVIL
STATE OF CALIFORNIA

THE STATE OF CALIFORNIA OR ITS OFFICERS OR AGENTS SHALL NOT BE RESPONSIBLE FOR THE ACCURACY OR COMPLETENESS OF SCANNED COPIES OF THIS PLAN SHEET.

LEGEND:

U/L = UPPER/LOWER CASE LETTERING
Caps = CAPITAL LETTERING
Num = NUMERAL SIZE

SIGN # 1

D12-1 (Mod)

LEGEND				ARROW	
LINE No.	U/L	Caps	Num	Deg	LENGTH
1		10E			
2		10E			
3		10E			

SIGN # 2

D12-1 (Mod)

LEGEND				ARROW	
LINE No.	U/L	Caps	Num	Deg	LENGTH
1		10E			
2		10E			
3		10E			

SIGN DETAILS

NO SCALE

SD-1

STATE OF CALIFORNIA - DEPARTMENT OF TRANSPORTATION
Caltrans® **TRAFFIC DESIGN**

FUNCTIONAL SUPERVISOR: CAMILLE ABOU FADEL
CALCULATED-DESIGNED BY: IRAM SYED
CHECKED BY: NOEL TAPIA
REVISED BY
DATE REVISED

LAST REVISION 10-12-15
DATE PLOTTED => 12-OCT-2015
TIME PLOTTED => 15:36

DIST	COUNTY	ROUTE	POST MILES TOTAL PROJECT	SHEET No.	TOTAL SHEETS
11	Imp,SD	5,7,8,15, 52,etc.	Var	10	59

REGISTERED CIVIL ENGINEER 10-05-15 DATE

10-12-15
PLANS APPROVAL DATE

REGISTERED PROFESSIONAL ENGINEER JOEL MAGANA No. C61500 Exp. 6/30/17 CIVIL STATE OF CALIFORNIA

The State of California or its officers or agents shall not be responsible for the accuracy or completeness of electronic copies of this plan sheet.

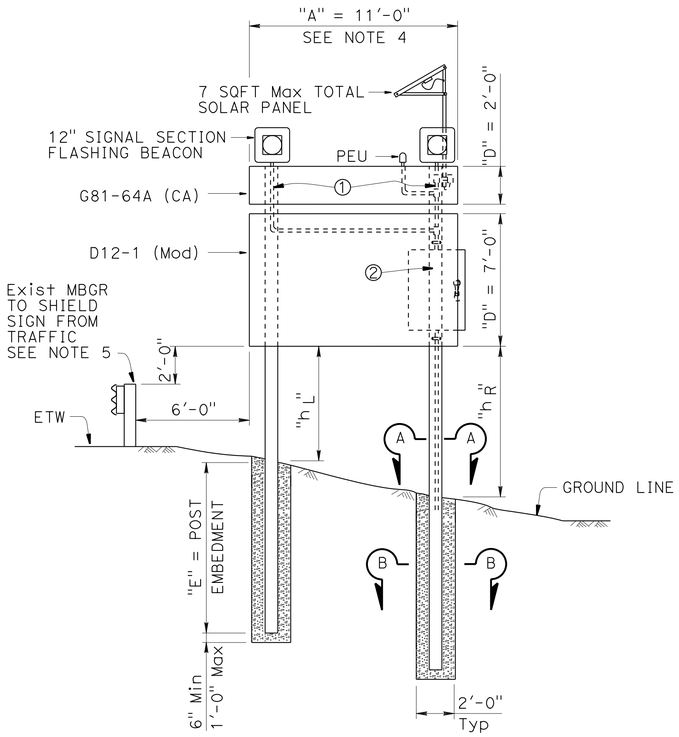

ELEVATION

SCALE 1/4" = 1'

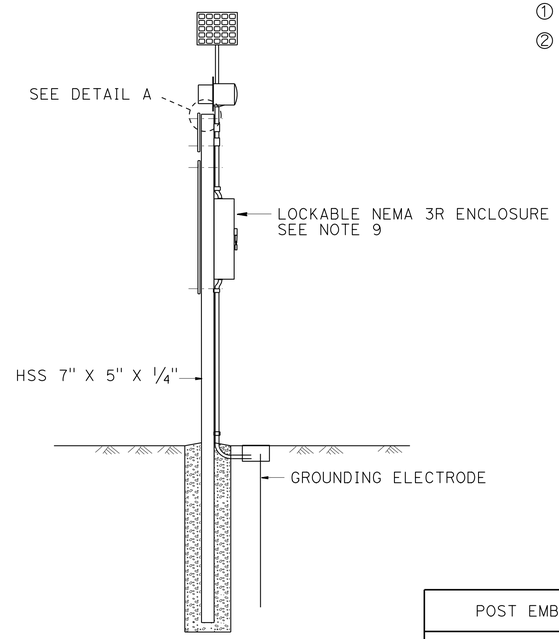

SIDE VIEW

SCALE 1/4" = 1'

ELECTRICAL NOTES:

① 1" * hole, BEVELED EDGE

② 1½" * hole, BEVELED EDGE

POST EMBEDMENT	
"h_L" OR "h_R"	"E"
6'-0" to 10'-0"	8'-0"
10'-0" to 14'-0"	9'-0"

DESIGN NOTES:

SPECIFICATIONS:

Design: AASHTO Standard Specifications for Structural Supports for Highway Signs, Luminaires and Traffic Signals, Fifth Edition (LTS-6).

LOADING:

Wind loading: 100 mph (3-Second gusts).

1. Unit Stresses (Structural Steel):
   a. fy = 46,000 psi (steel post)
   b. fy = 36,000 psi (unless otherwise noted)
2. Unit Stresses (Reinforced Concrete):
   a. f'c = 3,600 psi
   b. fy = 60,000 psi
3. Pole embedment depth design is based on Broms' approximate procedure as described in Article 13.6 of AASHTO LTS-6.
4. Embedment depth is calculated based on the following assumed soil parameters,
   Cohesive Soil:
   Shear strength of soil c = 1200 psf.
   Cohesionless Soil:
   ø = 30 deg, γ = 120 pcf.
   Soil assumed to be unsaturated.
5. An overload factor of 2.0 and an undercapacity factor of 0.7 were used for a minimum safety factor of 2.86.
6. Allowable vertical bearing pressure at the end bearing of posts is 3000 psf at 6 feet or more embedment.

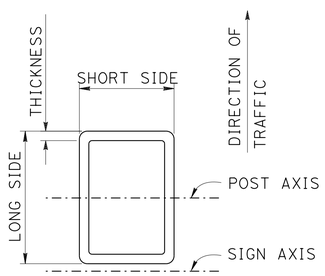

HSS STEEL POST SECTION A-A

NO SCALE

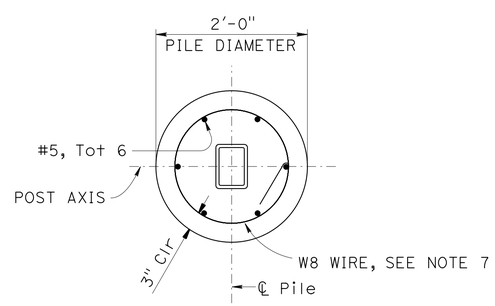

SECTION B-B

SCALE 1" = 1'

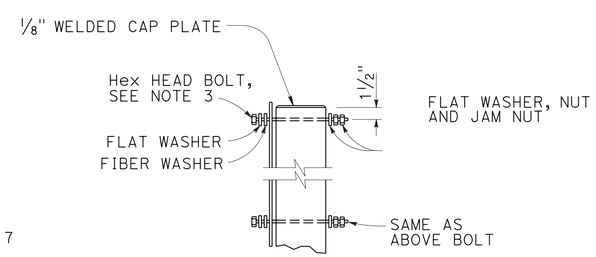

DETAIL A

NO SCALE

NOTES:

1. See Project Plans for:
   a. Location of each sign
   b. Length of sign panel "A"
   c. Depth of sign "D"
   d. Height "h_L" and "h_R" of bottom of sign above ground line at each post
2. For **H**ighway **A**dvisory **R**adio Framed Single Sheet Aluminum sign details not shown, see Standard Plans S93 and S94.
3. 3/8" Dia for laminated panel signs or framed single sheet aluminum panel signs.
4. Dimension shown on sign panels are for fabrication.
5. No guardrail is required where sign is located outside the clear recovery zone.
6. Do not exceed the attachments shown.
7. Lapped splices in spiral reinforcement shall be lapped at least 80 wire diameters. Spiral reinforcement at splices and at ends shall be terminated with a 135° hook with a 6" tail hooked around a longitudinal bar. Spiral pitch at 6" in full length of pile.
8. Fabricate posts to accommodate Electrical mounting prior to galvanization. Refer to Electrical Notes & Electrical sheets.
9. NEMA attachment to the post shall require Engineer's approval.

NOTE:
THE CONTRACTOR MUST VERIFY ALL CONTROLLING FIELD DIMENSIONS BEFORE ORDERING OR FABRICATING ANY MATERIAL.

BRANCH CHIEF DAVID NEUMANN	DESIGN	BY J MAGANA	CHECKED L WARREN
	DETAILS	BY H NGUYEN	CHECKED L WARREN
	QUANTITIES	BY	CHECKED

STATE OF CALIFORNIA
DEPARTMENT OF TRANSPORTATION

DIVISION OF ENGINEERING SERVICES
STRUCTURE DESIGN
SPECIAL DESIGN BRANCH

BRIDGE NO. N/A
POST MILE N/A

HIGHWAY ADVISORY RADIO SYSTEM
SIGN ON STEEL POST

SDS-1

STRUCTURES DESIGN SPECIAL DESIGN SHEET (ENGLISH) (REV. 09-01-10)

ORIGINAL SCALE IN INCHES FOR REDUCED PLANS 0 1 2 3

UNIT:
PROJECT NUMBER & PHASE: 1113000046
CONTRACT NO.: 11-416001

DISREGARD PRINTS BEARING EARLIER REVISION DATES

REVISION DATES 3/9/15 3/21/15

SHEET 1 OF 1

FILE => 1113000046oc001.dgn

USERNAME => s127400 DATE PLOTTED => 12-OCT-2015 TIME PLOTTED => 15:36

Dist	COUNTY	ROUTE	POST MILES TOTAL PROJECT	SHEET No.	TOTAL SHEETS
11	Imp, SD	5,7,8,15, 52,etc.	Var	11	59

REGISTERED CIVIL ENGINEER 10-02-15 DATE

10-12-15
PLANS APPROVAL DATE

REGISTERED PROFESSIONAL ENGINEER NOEL TAPIA No. 81028 Exp. 09-30-17 CIVIL STATE OF CALIFORNIA

THE STATE OF CALIFORNIA OR ITS OFFICERS OR AGENTS SHALL NOT BE RESPONSIBLE FOR THE ACCURACY OR COMPLETENESS OF SCANNED COPIES OF THIS PLAN SHEET.

NOTES:

1. FEDERAL (MUTCD) SIGN CODES ARE SHOWN UNLESS DESIGNATED BY (CA) INDICATING STANDARD CALIFORNIA SIGN SPECIFICATIONS.
2. REFER TO "FURNISH SIGN PANEL" CHART FOR FURTHER INFORMATION.
3. SEE ELECTRICAL PLANS FOR LOCATION OF SIGNS.

SIGN QUANTITIES

SIGN No.	CODE	ROUTE	COUNTY	POSTMILE	LOCATION	DIRECTION	PANEL SIZE (N) Horiz x Vert INCHES x INCHES	REMOVE ROADSIDE SIGN EA	TREATED WOOD WASTE LB	REMARKS
	G81-64A (CA)	5	SD	49.19	22	NB	132 X 24			
1	D12-1 (Mod)						132 X 84			
	G81-64A (CA)	78		1.00	24	EB	132 X 24			
1	D12-1 (Mod)						132 X 84			
	G81-64A (CA)	78		8.01	25	WB	132 X 24			
1	D12-1 (Mod)						132 X 84			
	G81-64A (CA)	78		5.94	26	EB	132 X 24			
1	D12-1 (Mod)						132 X 84			
	G81-64A (CA)	15		30.39	27	NB	132 X 24			
1	D12-1 (Mod)						132 X 84			
	G81-64A (CA)	15		32.53	28	SB	132 X 24			
1	D12-1 (Mod)						132 X 84	1	309	
	G81-64A (CA)	78		14.54	29	EB	132 X 24			
1	D12-1 (Mod)						132 X 84			
	G81-64A (CA)	78		17.61	30	WB	132 X 24			
1	D12-1 (Mod)						132 X 84			
	G81-64A (CA)	805		0.45	31	NB	132 X 24			
2	D12-1 (Mod)						132 X 84			
	G81-64A (CA)	805		3.20	32	SB	132 X 24			
2	D12-1 (Mod)						132 X 84			
	G81-64A (CA)	905		3.84	34	EB	132 X 24			
2	D12-1 (Mod)						132 X 84	1	309	
	G81-64A (CA)	905		4.67	35	WB	132 X 24			
2	D12-1 (Mod)						132 X 84			
	G81-64A (CA)	905		7.07	36	WB	132 X 24			
2	D12-1 (Mod)						132 X 84			
	G81-64A (CA)	5		4.48	37	SB	132 X 24			
2	D12-1 (Mod)						132 X 84			
							TOTAL	2	618	

(N) - NOT A SEPARATE PAY ITEM, FOR INFORMATION ONLY.

STATE OF CALIFORNIA - DEPARTMENT OF TRANSPORTATION
Caltrans
TRAFFIC DESIGN

FUNCTIONAL SUPERVISOR: CAMILLE ABOUFADEL
CALCULATED-DESIGNED BY: IRAM SYED
CHECKED BY: NOEL TAPIA
REVISED BY
DATE REVISED

SIGN QUANTITIES

SQ-1

LAST REVISION 10-12-15
DATE PLOTTED => 12-OCT-2015
TIME PLOTTED => 15:36

Dist	COUNTY	ROUTE	POST MILES TOTAL PROJECT	SHEET No.	TOTAL SHEETS
11	Imp, SD	5,7,8,15, 52,etc.	Var	12	59

REGISTERED CIVIL ENGINEER 10-02-15 DATE

10-12-15
PLANS APPROVAL DATE

REGISTERED PROFESSIONAL ENGINEER NOEL TAPIA No. 81028 Exp. 09-30-17 CIVIL STATE OF CALIFORNIA

THE STATE OF CALIFORNIA OR ITS OFFICERS OR AGENTS SHALL NOT BE RESPONSIBLE FOR THE ACCURACY OR COMPLETENESS OF SCANNED COPIES OF THIS PLAN SHEET.

NOTES:

1. WHITE-Wht, BLACK-Blk, BLUE-Blu, FLUORESCENT YELLOW-FY.
2. REFER TO "SIGN QUANTITIES" CHART FOR FURTHER INFORMATION.
3. FEDERAL (MUTCD) SIGN CODES ARE SHOWN UNLESS DESIGNATED BY (CA) INDICATING STANDARD CALIFORNIA SIGN SPECIFICATIONS.

FURNISH SIGN PANEL

Loc No.	CODE	PANEL SIZE Horiz	PANEL SIZE Vert	BACKGROUND SHEETING COLOR	BACKGROUND RETRO-REFLECTIVE ASTM TYPE	LEGEND SHEETING COLOR	LEGEND REFLECTIVE ASTM TYPE	LEGEND BLACK(NON-REFLECTIVE	SIGN PANEL TYPE XI RETROREFLECTIVE SHEETING	SIGN PANEL SINGLE SHEET ALUMINUM (SQFT) FRAMED 0.080 INCHES	SIGN PANEL PROTECTIVE OVERLAY
		INCHES X INCHES							SQFT		PREMIUM FILM
22	G81-64A (CA)	132 X 24		FY	XI	Blk		X	22	22	X
	D12-1 (Mod)	132 X 84		Blu	XI	Wht	XI		77	77	X
24	G81-64A (CA)	132 X 24		FY	XI	Blk		X	22	22	X
	D12-1 (Mod)	132 X 84		Blu	XI	Wht	XI		77	77	X
25	G81-64A (CA)	132 X 24		FY	XI	Blk		X	22	22	X
	D12-1 (Mod)	132 X 84		Blu	XI	Wht	XI		77	77	X
26	G81-64A (CA)	132 X 24		FY	XI	Blk		X	22	22	X
	D12-1 (Mod)	132 X 84		Blu	XI	Wht	XI		77	77	X
27	G81-64A (CA)	132 X 24		FY	XI	Blk		X	22	22	X
	D12-1 (Mod)	132 X 84		Blu	XI	Wht	XI		77	77	X
28	G81-64A (CA)	132 X 24		FY	XI	Blk		X	22	22	X
	D12-1 (Mod)	132 X 84		Blu	XI	Wht	XI		77	77	X
29	G81-64A (CA)	132 X 24		FY	XI	Blk		X	22	22	X
	D12-1 (Mod)	132 X 84		Blu	XI	Wht	XI		77	77	X
30	G81-64A (CA)	132 X 24		FY	XI	Blk		X	22	22	X
	D12-1 (Mod)	132 X 84		Blu	XI	Wht	XI		77	77	X
31	G81-64A (CA)	132 X 24		FY	XI	Blk		X	22	22	X
	D12-1 (Mod)	132 X 84		Blu	XI	Wht	XI		77	77	X
32	G81-64A (CA)	132 X 24		FY	XI	Blk		X	22	22	X
	D12-1 (Mod)	132 X 84		Blu	XI	Wht	XI		77	77	X
34	G81-64A (CA)	132 X 24		FY	XI	Blk		X	22	22	X
	D12-1 (Mod)	132 X 84		Blu	XI	Wht	XI		77	77	X
35	G81-64A (CA)	132 X 24		FY	XI	Blk		X	22	22	X
	D12-1 (Mod)	132 X 84		Blu	XI	Wht	XI		77	77	X
36	G81-64A (CA)	132 X 24		FY	XI	Blk		X	22	22	X
	D12-1 (Mod)	132 X 84		Blu	XI	Wht	XI		77	77	X
37	G81-64A (CA)	132 X 24		FY	XI	Blk		X	22	22	X
	D12-1 (Mod)	132 X 84		Blu	XI	Wht	XI		77	77	X
								TOTAL	1,386	1,386	

SIGN QUANTITIES

SQ-2

STATE OF CALIFORNIA - DEPARTMENT OF TRANSPORTATION
Caltrans® TRAFFIC DESIGN

FUNCTIONAL SUPERVISOR: CAMILLE ABOUFADEL
CALCULATED-DESIGNED BY: IRAM SYED
CHECKED BY: NOEL TAPIA
REVISED BY
DATE REVISED

LAST REVISION 10-12-15
DATE PLOTTED => 12-OCT-2015
TIME PLOTTED => 15:36

Dist	COUNTY	ROUTE	POST MILES TOTAL PROJECT	SHEET No.	TOTAL SHEETS
11	Imp, SD	5,7,8,15, 52,etc.	Var	13	59

REGISTERED CIVIL ENGINEER 10-02-15 DATE

10-12-15
PLANS APPROVAL DATE

REGISTERED PROFESSIONAL ENGINEER SOLOMON TADESSE No. C62773 Exp. 06-30-16 CIVIL STATE OF CALIFORNIA

THE STATE OF CALIFORNIA OR ITS OFFICERS OR AGENTS SHALL NOT BE RESPONSIBLE FOR THE ACCURACY OR COMPLETENESS OF SCANNED COPIES OF THIS PLAN SHEET.

LEGEND

HAR HIGHWAY ADVISORY RADIO

NOTE

1. FOR HAR SIGN FOUNDATION DETAIL, SEE SDS-1 SHEET.

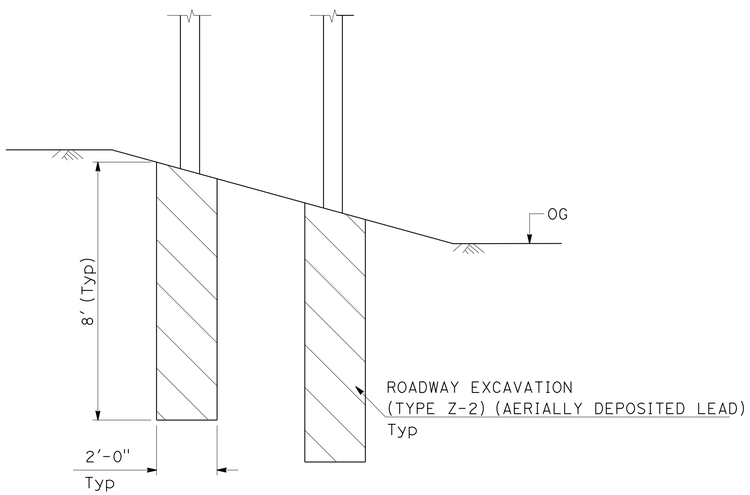

ROADWAY EXCAVATION FOR HAR SIGN FOUNDATION

ROADWAY EXCAVATION QUANTITIES

LOCATION	# OF PILES	LENGTH OF PILES	PILE DIAMETER	ROADWAY EXCAVATION (TYPE Z-2) (AERIALLY DEPOSITED LEAD)	REMARK
	(EA) [N]	(LF) [N]	(LF) [N]	(CY)	
22	2	8	2	1.86	HAR SIGN FOUNDATION
29	2	8	2	1.86	HAR SIGN FOUNDATION
30	2	8	2	1.86	HAR SIGN FOUNDATION
31	2	8	2	1.86	HAR SIGN FOUNDATION
35	2	8	2	1.86	HAR SIGN FOUNDATION
			TOTAL	9.30	

[N] NOT A PAY ITEM, FOR INFORMATION ONLY.

SUMMARY OF QUANTITIES

Q-1

STATE OF CALIFORNIA - DEPARTMENT OF TRANSPORTATION
Caltrans PROJECT DEVELOPMENT

FUNCTIONAL SUPERVISOR: KAZIM MAMDANI
CALCULATED-DESIGNED BY: ARY JAFF
CHECKED BY: SOLOMON TADESSE
REVISED BY
DATE REVISED

LAST REVISION 10-12-15
DATE PLOTTED => 12-OCT-2015
TIME PLOTTED => 15:36

Dist	COUNTY	ROUTE	POST MILES TOTAL PROJECT	SHEET No.	TOTAL SHEETS
11	Imp, SD	5,7,8,15, 52,etc.	Var	14	59

M Fullenwider 10-02-15
REGISTERED ELECTRICAL ENGINEER DATE

10-12-15
PLANS APPROVAL DATE

REGISTERED PROFESSIONAL ENGINEER MERVIN D. FULLENWIDER No. E20211 Exp. 3-31-17 ELECTRICAL STATE OF CALIFORNIA

THE STATE OF CALIFORNIA OR ITS OFFICERS OR AGENTS SHALL NOT BE RESPONSIBLE FOR THE ACCURACY OR COMPLETENESS OF SCANNED COPIES OF THIS PLAN SHEET.

NOTES:

1. REFER TO THE INFORMATION HANDOUT, SECTION 1, FOR MORE INFORMATION.
2. REFER TO THE ELECTRICAL DETAILS SHEETS E-9, E-10, E-11 AND E-12 FOR MORE INFORMATION.
3. GPS COORDINATES ARE APPROXIMATE VALUES. THE GPS COORDINATES ARE NAD 1983.
4. FOR COUNT STATION 831 REFER TO THE ELECTRICAL DETAILS SHEET E-11, DETAIL 'A'.
5. FOR COUNT STATION 402 REFER TO THE ELECTRICAL DETAILS SHEET E-11, DETAIL 'B'.

ABBREVIATIONS:

GPS GLOBAL POSITIONING SYSTEM
NAD NORTH AMERICAN DATUM

MODIFY COUNT STATION

LOCATION OF CONSTRUCTION	COUNT STATION	COUNTY	ROUTE	POST MILE	ADDITIONAL LOCATION INFORMATION	GPS COORDINATE	
						LATITUDE	LONGITUDE
1	717	SD	75	17.40	NB Rte 75, NORTH OF FIDDLER'S COVE MARINA	32.65387	-117.15175
2	814	SD	54	1.83	WB Rte 54, JUST BEFORE THE CONNECTOR TO THE NB Rte 805	32.65997	-117.07096
3	821	SD	67	6.96	SB Rte 67, NORTH OF WILLOW Rd	32.87756	-116.92534
4	972	SD	67	15.20	SB Rte 67, NORTH OF POWAY Rd	32.98312	-116.97484
5	730	SD	52	13.30	WB Rte 52, EAST OF MAST Blvd, NE SIDE OF THE BRIDGE	32.84460	-117.02593
6	734	SD	52	16.70	EB Rte 52, WEST OF COTTONWOOD UNDERCROSSING	32.83263	-116.97428
7	759	SD	56	8.54	WB Rte 56, WEST OF Rte 15	32.96211	-117.10349
8	754	SD	56	4.53	WB Rte 56, ON RANCHO SANTA FE FARMS Rd, NE CORNER OF THE BRIDGE	32.96651	-117.17763
9	968	SD	78	54.67	EB Rte 78, EAST OF CALICO RANCH Rd BETWEEN THE TOWNS OF SANTA YSABEL AND JULIAN	33.08854	-116.64621
10	831	SD	76	32.72	EB Rte 76, WEST OF RINCON SPRINGS Rd, NEXT TO THE FIRE STATION	33.28871	-116.96122
11	719	Imp	78	21.22	WB Rte 78, EAST OF THE JUNCTION OF Rte 115	32.97458	-115.39840
12	402	Imp	7	6.34	NB Rte 7, SOUTH OF Rte 8 AT BOTTOM OF THE EMBANKMENT	32.76794	-115.38329

SERVICE EQUIPMENT ENCLOSURE INFORMATION

LOCATION OF CONSTRUCTION	LOCATION OF SERVICE EQUIPMENT ENCLOSURE FROM COUNT STATION CABINET	SERVICE EQUIPMENT ENCLOSURE TYPE AND VOLTAGE
1	MOUNTED ON THE CABINET	TYPE A, 120 V
2	510', NW	TYPE III, 120 V
3	260' S, MOUNTED ON A UTILITY CABINET	TYPE A, 120 V
4	5' S	TYPE III, 120V
5	175', NE	TYPE III, 120 V
6	375', SE	TYPE III, 120 V
7	0.35 MILES, NE	TYPE III, 120 V
8	227' N	TYPE III, 120 V
9	3' E, MOUNTED ON A WOOD POLE	TYPE A, 120 V
10	2' SE	TYPE III, 120 V
11	40', E	TYPE A, 120 V
12	350, S	TYPE III, 120 V

MODIFY COUNT STATION

E-1

REVISED BY | DATE REVISED
LOUIE LA COMPTE | MERVIN FULLENWIDER
CALCULATED-DESIGNED BY | CHECKED BY
FUNCTIONAL SUPERVISOR | RAJPREET SINGH
STATE OF CALIFORNIA - DEPARTMENT OF TRANSPORTATION
Caltrans® TRAFFIC ELECTRICAL

LAST REVISION 10-08-15 | DATE PLOTTED => 12-OCT-2015 TIME PLOTTED => 15:36

Dist	COUNTY	ROUTE	POST MILES TOTAL PROJECT	SHEET No.	TOTAL SHEETS
11	Imp, SD	5,7,8,15, 52,etc.	Var	15	59

REGISTERED ELECTRICAL ENGINEER — DATE: 10-02-15

PLANS APPROVAL DATE: 10-12-15

REGISTERED PROFESSIONAL ENGINEER — MERVIN D. FULLENWIDER No. E20211 Exp. 3-31-17 ELECTRICAL — STATE OF CALIFORNIA

THE STATE OF CALIFORNIA OR ITS OFFICERS OR AGENTS SHALL NOT BE RESPONSIBLE FOR THE ACCURACY OR COMPLETENESS OF SCANNED COPIES OF THIS PLAN SHEET.

NOTES:

1. REFER TO THE INFORMATION HANDOUT, SECTION 2, FOR MORE INFORMATION.
2. GPS COORDINATES ARE APPROXIMATE VALUES. THE GPS COORDINATES ARE NAD 1983.

ABBREVIATIONS:

GPS - GLOBAL POSITIONING SYSTEM
NAD - NORTH AMERICAN DATUM

MODIFY COMMUNICATION HUB

LOCATION OF CONSTRUCTION	COMMUNICATION HUB	COUNTY	ROUTE	POST MILE	ADDITIONAL LOCATION INFORMATION	GPS COORDINATES	
						LATITUDE	LONGITUDE
13	2	SD	8	0.21	WEST END OF THE CALTRANS' DISTRICT OFFICE PARKING LOT	32.75875	-117.20055
14	9	SD	15	27.21	IN THE DEL LAGO BUS TRANSPORTATION TERMINAL	33.07288	-117.07044
15	11	SD	52	17.27	AT MAGNOLIA Ave, UNDER THE NB Rte 67 TO WB 52 INTERCHANGE	32.83247	-116.96428
16	6	SD	56	9.71	WB Rte 56, WEST OF Rte 15	32.96465	-117.09712
17	3	SD	94	1.47	WB Rte 94 OFF-RAMP TO F STREET BEFORE THE Rte 5 BRIDGE	32.71383	-117.14682
18	4	SD	94	3.98	NB Rte 805 CONNECTOR TO WB Rte 94, RIGHT SIDE ON THE HILL	32.71925	-117.10461
19	1	SD	163	3.63	SB Rte 163 TO EB Rte 8 ON-RAMP, INSIDE OF THE LOOP	32.76171	-117.16383
20	5	SD	163	10.93	NB Rte 163 IN THE CALTRANS' KEARNY VILLA MAINTENANCE YARD	32.85496	-117.11763
21	13	SD	905	10.98	EB Rte 905, ACCESS AT AIRWAY Rd	32.56044	-116.94391

SERVICE EQUIPMENT ENCLOSURE INFORMATION

LOCATION OF CONSTRUCTION	LOCATION OF SERVICE EQUIPMENT ENCLOSURE FROM COMMUNICATION HUB	SERVICE EQUIPMENT ENCLOSURE TYPE AND VOLTAGE
13	15' SE	TRANSFORMER DISCONNECT CABINET, 120/240 V
14	200' SW	TYPE III, 120/240 V
15	375' SE	TYPE III, 120/240 V
16	80' SW	TYPE III, 120/240 V
17	130' SW	TYPE III, 120 V
18	60' SW	TRANSFORMER DISCONNECT CABINET, 120/240 V
19	5' FROM THE FRONT DOOR	TRANSFORMER DISCONNECT CABINET, 120/240 V
20	660' SW	TYPE III, 120/240 V
21	425' W	TYPE III, 120/240 V

MODIFY COMMUNICATION HUB

E-2

STATE OF CALIFORNIA - DEPARTMENT OF TRANSPORTATION
Caltrans® TRAFFIC ELECTRICAL

FUNCTIONAL SUPERVISOR: RAJPREET SINGH
CALCULATED-DESIGNED BY: LOUIE LA COMPTE
CHECKED BY: MERVIN FULLENWIDER
REVISED BY
DATE REVISED

LAST REVISION 10-09-15
DATE PLOTTED => 12-OCT-2015
TIME PLOTTED => 15:36

Dist	COUNTY	ROUTE	POST MILES TOTAL PROJECT	SHEET No.	TOTAL SHEETS
11	Imp, SD	5,7,8,15 52, etc	Var	16	59

REGISTERED ELECTRICAL ENGINEER — DATE: 10-02-15

PLANS APPROVAL DATE: 10-12-15

REGISTERED PROFESSIONAL ENGINEER — MERVIN D. FULLENWIDER No. E20211 Exp. 3-31-17 ELECTRICAL — STATE OF CALIFORNIA

THE STATE OF CALIFORNIA OR ITS OFFICERS OR AGENTS SHALL NOT BE RESPONSIBLE FOR THE ACCURACY OR COMPLETENESS OF SCANNED COPIES OF THIS PLAN SHEET.

NOTES:

1. REFER TO THE INFORMATION HANDOUT, SECTION 3, FOR MORE INFORMATION.
2. REFER TO THE ELECTRICAL DETAIL SHEETS E-14, E-15, E-16, E-17 AND SDS-1 FOR MORE INFORMATION.
3. GPS COORDINATES ARE APPROXIMATE VALUES. THE GPS COORDINATES ARE NAD 1983.

ABBREVIATIONS:

GPS GLOBAL POSITIONING SYSTEM
NAD NORTH AMERICAN DATUM

MODIFY HIGHWAY ADVISORY RADIO SYSTEM

LOCATION OF CONSTRUCTION	COUNTY	ROUTE	PM	LOCATION DESCRIPTION	GPS COORDINATES		DETAIL
					LATITUDE	LONGITUDE	
22	SD	5	48.91	NB Rte 5, SOUTH OF CHINQUAPIN Ave OVERCROSSING	33.14744	-117.33357	SEE DETAIL 'A'
24	SD	78	1.00	EB Rte 78, WEST OF EL CAMINO REAL OFF-RAMP	33.18097	-117.33543	SEE DETAIL 'C'
25	SD	78	8.01	WB Rte 78, EAST OF MAR VISTA Dr	33.17736	-117.22761	SEE DETAIL 'D'
26	SD	78	5.94	EB Rte 78, WEST OF MELROSE Dr	33.19445	-117.25451	SEE DETAIL 'E'
27	SD	15	30.39	NB Rte 15, SOUTH OF WEST VALLEY Pkwy, JUST OFF THE MBGR	33.11243	-117.09685	SEE DETAIL 'F'
28	SD	15	32.53	SB Rte 15, NEAR THE ON-RAMP FROM WEST EL NORTE Pkwy	33.14198	-117.10512	SEE DETAIL 'D'
29	SD	78	14.54	EB Rte 78, WEST OF MISSION Rd	33.13654	-117.13678	SEE DETAIL 'G'
30	SD	78	17.61	WB Rte 78, WEST OF BROADWAY, BEHIND THE DITCH	33.13276	-117.08757	SEE DETAIL 'H'
31	SD	805	0.15	NB Rte 805, SOUTH OF THE Rte 805 AND Rte 5 SEPARATION	32.54660	-117.03535	SEE DETAIL 'I'
32	SD	805	3.69	SB Rte 805, NORTH OF MAIN St	32.59519	-117.03659	SEE DETAIL 'J'
33	SD	905	3.64	EB Rte 905, EAST OF HOWARD Ave	32.56790	-117.06638	NO DETAIL
34	SD	905	3.84	EB Rte 905, ON THE MEDIAN EAST OF BEYER Blvd	32.56828	-117.06274	SEE DETAIL 'K'
35	SD	905	4.67	WB Rte 905 EAST OF PICADOR Blvd	32.56855	-117.04901	SEE DETAIL 'L'
36	SD	905	7.07	WB Rte 905, EAST OF CALIENTE Ave	32.56656	-117.00852	SEE DETAIL 'M'
37	SD	5	4.48	SB Rte 5, SOUTH OF PALM Ave	32.58158	-117.08706	SEE DETAIL 'N'

STATE OF CALIFORNIA - DEPARTMENT OF TRANSPORTATION
Caltrans® TRAFFIC ELECTRICAL

FUNCTIONAL SUPERVISOR: RAJPREET SINGH
CALCULATED-DESIGNED BY: LOUIE LA COMPTE
CHECKED BY: MERVIN FULLENWIDER
REVISED BY
DATE REVISED

MODIFY HIGHWAY ADVISORY RADIO SYSTEM

E-3

LAST REVISION 10-09-15
DATE PLOTTED => 12-OCT-2015
TIME PLOTTED => 15:36

Dist	COUNTY	ROUTE	POST MILES TOTAL PROJECT	SHEET No.	TOTAL SHEETS
11	Imp, SD	5,7,8,15 52, etc	Var	17	59

REGISTERED ELECTRICAL ENGINEER — DATE: 10-02-15

10-12-15
PLANS APPROVAL DATE

REGISTERED PROFESSIONAL ENGINEER — MERVIN D. FULLENWIDER — No. E20211 — Exp. 3-31-17 — ELECTRICAL — STATE OF CALIFORNIA

THE STATE OF CALIFORNIA OR ITS OFFICERS OR AGENTS SHALL NOT BE RESPONSIBLE FOR THE ACCURACY OR COMPLETENESS OF SCANNED COPIES OF THIS PLAN SHEET.

NOTES:

1. REFER TO THE INFORMATION HANDOUT, SECTION 4, FOR MORE INFORMATION.
2. REFER TO THE ELECTRICAL DETAIL SHEET E-18 FOR MORE INFORMATION.
3. GPS COORDINATES ARE APPROXIMATE VALUES.
   THE GPS COORDINATES ARE NAD 1983.

ABBREVIATIONS:

GPS - GLOBAL POSITIONING SYSTEM
NAD - NORTH AMERICAN DATUM

MODIFY PHOTOVOLTAIC SYSTEM

LOCATION OF CONSTRUCTION	COUNTY	ROUTE	PM	ADDITIONAL LOCATION INFORMATION	GPS COORDINATES	
					LATITUDE	LONGITUDE
38	SD	8	19.42	EB Rte 8, 0.75 MILES WEST OF LOS COCHES Rd	32.81964	-116.91010

MODIFY PHOTOVOLTAIC SYSTEM

E-4

REVISED BY | DATE REVISED
LOUIE LA COMPTE | MERVIN FULLENWIDER
CALCULATED-DESIGNED BY | CHECKED BY
FUNCTIONAL SUPERVISOR: RAJPREET SINGH

STATE OF CALIFORNIA - DEPARTMENT OF TRANSPORTATION
Caltrans® TRAFFIC ELECTRICAL

LAST REVISION 10-09-15 | DATE PLOTTED => 12-OCT-2015 | TIME PLOTTED => 15:36

Dist	COUNTY	ROUTE	POST MILES TOTAL PROJECT	SHEET No.	TOTAL SHEETS
11	Imp, SD	5,7,8,15 52, etc	Var	18	59

REGISTERED ELECTRICAL ENGINEER — DATE 10-02-15

PLANS APPROVAL DATE 10-12-15

REGISTERED PROFESSIONAL ENGINEER MERVIN D. FULLENWIDER No. E20211 Exp. 3-31-17 ELECTRICAL STATE OF CALIFORNIA

THE STATE OF CALIFORNIA OR ITS OFFICERS OR AGENTS SHALL NOT BE RESPONSIBLE FOR THE ACCURACY OR COMPLETENESS OF SCANNED COPIES OF THIS PLAN SHEET.

NOTES:

1. REFER TO THE INFORMATION HANDOUT, SECTION 5, FOR MORE INFORMATION.
2. REFER TO THE ELECTRICAL DETAIL SHEET E-19 FOR MORE INFORMATION.
3. GPS COORDINATES ARE APPROXIMATE VALUES.
   THE GPS COORDINATES ARE NAD 1983.
4. FOR LOCATION 39, SEE ELECTRICAL DETAILS SHEET E-19, DETAIL 'A' DETAIL 'C' AND DETAIL 'E'.
5. FOR LOCATION 40, SEE ELECTRICAL DETAILS SHEET E-19, DETAIL 'B', DETAIL 'D' AND DETAIL 'F'.
6. FOR LOCATION 23, SEE ELECTRICAL DETAILS SHEET E-19, DETAIL 'B', DETAIL 'C' AND DETAIL 'G'.

ABBREVIATIONS:

GPS - GLOBAL POSITIONING SYSTEM
NAD - NORTH AMERICAN DATUM

MODIFY CLOSED CIRCUIT TELEVISION CAMERA

LOCATION OF CONSTRUCTION	COUNTY	ROUTE	PM	ADDITIONAL LOCATION INFORMATION	GPS COORDINATES	
					LATITUDE	LONGITUDE
23	SD	5	30.39	NB Rte 5, SOUTH OF ROSELLE St	32.90012	-117.22444
39	SD	56	09.71	WB Rte 56 JUST WEST OF Rte 15	32.96451	-117.09731
40	SD	56	04.86	WB Rte 56, 0.35 MILES EAST OF RANCHO SANTA FE FARMS Rd	32.96728	-117.17186

SERVICE EQUIPMENT ENCLOSURE INFORMATION

LOCATION OF CONSTRUCTION	LOCATION OF SERVICE EQUIPMENT ENCLOSURE FROM THE CCTV CONTROLLER CABINET	SERVICE EQUIPMENT ENCLOSURE TYPE AND VOLTAGE
23	550', SW	TYPE III, 120/240 V
39	25', NE	TYPE III, 120/240 V
40	1.2 MILES SE, AT THE CAMINO DEL SUR ON-RAMP TO WB Rte 56	TYPE III, 120 V

MODIFY CLOSED CIRCUIT TELEVISION CAMERA

E-5

STATE OF CALIFORNIA - DEPARTMENT OF TRANSPORTATION
Caltrans® TRAFFIC ELECTRICAL

FUNCTIONAL SUPERVISOR: RAJPREET SINGH
CALCULATED-DESIGNED BY: LOUIE LA COMPTE
CHECKED BY: MERVIN FULLENWIDER
REVISED BY
DATE REVISED

LAST REVISION 10-09-15
DATE PLOTTED => 12-OCT-2015
TIME PLOTTED => 15:36

Dist	COUNTY	ROUTE	POST MILES TOTAL PROJECT	SHEET No.	TOTAL SHEETS
11	Imp, SD	5,7,8,15 52, etc	Var	19	59

REGISTERED ELECTRICAL ENGINEER — DATE 10-02-15

PLANS APPROVAL DATE 10-12-15

REGISTERED PROFESSIONAL ENGINEER MERVIN D. FULLENWIDER No. E20211 Exp. 3-31-17 ELECTRICAL STATE OF CALIFORNIA

THE STATE OF CALIFORNIA OR ITS OFFICERS OR AGENTS SHALL NOT BE RESPONSIBLE FOR THE ACCURACY OR COMPLETENESS OF SCANNED COPIES OF THIS PLAN SHEET.

NOTES:

1. REFER TO THE INFORMATION HANDOUT, SECTION 6, FOR MORE INFORMATION.
2. REFER TO THE ELECTRICAL DETAILS SHEET E-20, E-21 AND E-22 FOR MORE INFORMATION.
3. GPS COORDINATES ARE APPROXIMATE VALUES. THE GPS COORDINATES ARE NAD 1983.

ABBREVIATIONS:

GPS - GLOBAL POSITIONING SYSTEM
NAD - NORTH AMERICAN DATUM

MODIFY SIGNAL

LOCATION OF CONSTRUCTION	COUNTY	ROUTE	PM	INTERSECTION	GPS COORDINATES		SERVICE EQUIPMENT ENCLOSURE FROM TYPE 332	SERVICE EQUIPMENT ENCLOSURE TYPE AND VOLTAGE
					LATITUDE	LONGITUDE		
41	SD	75	9.31	Rte 75 AT SATURN Ave (P9.312)	32.58402	-117.09274	40' NORTH, ON SATURN Ave	TYPE II, 120/240V
42	SD	75	9.71	Rte 75 AT 16TH STREET (P9.706)	32.58369	-117.09954	10' SOUTH, ON 16TH St	TYPE III, 120/240V
43	SD	75	10.07	Rte 75 AT 13TH STREET (P10.070)	32.58404	-117.10599	50' NW, SAME CORNER OF INTERSECTION ON 13TH St.	TYPE III, 120/240V
44	SD	94	3.65	Rte 94 EB AT HOME Ave AND FEDERAL (P3.649)	32.71980	-117.11050	75' SW, SAME CORNER OF INTERSECTION ON ASH St	TYPE III, 120/240V

REVISED BY | DATE REVISED

MERVIN FULLENWIDER | LOUIE LA COMPTE

CALCULATED-DESIGNED BY | CHECKED BY

FUNCTIONAL SUPERVISOR: RAJPREET SINGH

STATE OF CALIFORNIA - DEPARTMENT OF TRANSPORTATION
Caltrans TRAFFIC ELECTRICAL

MODIFY SIGNAL

E-6

LAST REVISION 10-09-15 | DATE PLOTTED => 12-OCT-2015 | TIME PLOTTED => 15:36

Dist	COUNTY	ROUTE	POST MILES TOTAL PROJECT	SHEET No.	TOTAL SHEETS
11	Imp, SD	5,7,8,15 52, etc	Var	20	59

REGISTERED ELECTRICAL ENGINEER — DATE: 10-02-15

10-12-15
PLANS APPROVAL DATE

REGISTERED PROFESSIONAL ENGINEER — MERVIN D. FULLENWIDER — No. E20211 — Exp. 3-31-17 — ELECTRICAL — STATE OF CALIFORNIA

THE STATE OF CALIFORNIA OR ITS OFFICERS OR AGENTS SHALL NOT BE RESPONSIBLE FOR THE ACCURACY OR COMPLETENESS OF SCANNED COPIES OF THIS PLAN SHEET.

NOTES:

1. REFER TO THE INFORMATION HANDOUT, SECTION 6, FOR MORE INFORMATION.
2. REFER TO THE ELECTRICAL DETAILS SHEETS E-20, E-21 AND E-22 FOR MORE INFORMATION.
3. GPS COORDINATES ARE APPROXIMATE VALUES.
   THE GPS COORDINATES ARE NAD 1983.

ABBREVIATIONS:

GPS - GLOBAL POSITIONING SYSTEM
NAD - NORTH AMERICAN DATUM

MODIFY SIGNAL

LOCATION OF CONSTRUCTION	COUNTY	ROUTE	PM	INTERSECTION	GPS COORDINATES		SERVICE EQUIPMENT ENCLOSURE FROM TYPE 332	SERVICE EQUIPMENT ENCLOSURE TYPE AND VOLTAGE
					LATITUDE	LONGITUDE		
45	Imp	7	0.22	Imp Rte 7 AT MENVIELLE Rd (P0.242)	32.68258	-115.38923	278' NE, NE QUADRANT OF INTERSECTION	TYPE III, 120/240V
46	Imp	8	37.82	Imp Rte 8 EB AT 4TH STREET (P37.972)	32.77303	-115.55240	8' SOUTH ON Rte 86	TYPE III, 120/240V
47	Imp	111	23.79	Imp OLD 111 AT DEL RIO PLACE AND WB 78 (P12.811)	33.00262	-115.52625	140' EAST ON DEL RIO PLACE	TYPE III, 120/240V
48	Imp	111	23.67	Imp OLD 111 AT SHANK Rd AND EB 78 (P12.812)	32.99906	-115.52631	8' EAST ON SHANK Rd	TYPE III, 120/240V
49	Imp	78	15.49	Imp Rte 78 AT Rte 111 (P22.008)	32.97849	-115.50182	197' WEST ON Rte 78	TYPE III, 120/240V
50	Imp	86	5.83	Imp Rte 86 AT WAKE Ave (P5.830)	32.77137	-115.55206	30' SE, ON WAKE Ave, SAME CORNER OF INTERSECTION	TYPE III, 120/240V
51	Imp	86	7.93	Imp Rte 86 AT PICO AVENUE (P7.938)	32.80586	-115.56961	221' EAST, ON PICO Ave	TYPE III, 120/240V
52	Imp	86	11.30	Imp Rte 86 AT 15TH STREET (P11.320)	32.85450	-115.56917	4' NORTH ON Rte 86	TYPE III, 120/240V
53	Imp	86	15.32	Imp Rte 86 AT KEYSTONE Rd (P15.321)	32.91263	-115.57050	3' WEST ON KEYSTONE Rd	TYPE III, 120/240V
54	Imp	86	19.47	Imp Rte 86 AT WILDCAT Dr (19.474)	32.96363	-115.54814	50' EAST ON WILDCAT Dr	TYPE III, 120/240V
55	Imp	86	20.07	Imp Rte 86 AT MALAN STREET (20.068)	32.97101	-115.54376	102' SE, ON DRIVEWAY OFF MALAN St. NEXT TO PP 10070ID	TYPE III, 120/240V
56	Imp	86	20.27	Imp Rte 86 AT K STREET (P20.250)	32.97319	-115.54136	160' NORTH OF NE QUADRANT OF THE INTERSECTION, ON Rte 86	TYPE III, 120/240V
57	Imp	86	20.98	Imp Rte 86 AT RIO VISTA Rd (20.983)	32.97852	-115.54784	155' NORTH, ON RIO VISTA	TYPE II, 120/240V
58	Imp	86	20.75	Imp Rte 86 AT WESTERN Ave (20.750)	32.97885	-115.54374	125' NORTH, ON WESTERN Ave, NB SIDE OF WESTERN Ave	TYPE III, 120/240V
59	Imp	98	33.73	Imp Rte 98 AT EAST RIVERA Dr (P33.724)	32.67978	-115.47429	30' SOUTH, ON EAST RIVERA Dr	TYPE III, 120/240V
60	Imp	98	35.20	Imp Rte 98 AT COLE Rd (P35.371)	32.69357	-115.45579	110' NW, ON COLE Rd	TYPE III, 120/240V
61	Imp	111	3.20	Imp Rte 111 AT JASPER Rd (P3.200)	32.70866	-115.49911	250' EAST ON JASPER Rd	TYPE III, 120/240V
62	Imp	111	8.26	Imp Rte 111 AT ROSS Rd (P8.244)	32.78158	-115.50114	7' WEST ON ROSS Rd	TYPE III, 120/240V
63	Imp	111	9.50	Imp Rte 111 AT EVAN HEWES Hwy (P9.496)	32.79950	-115.50091	8' EAST ON EVAN HEWES Hwy	TYPE III, 120/240V
64	Imp	111	11.31	Imp Rte 111 AT ATEN Rd (P12.544)	32.82564	-115.50047	15' WEST ON ATEN Rd	TYPE III, 120/240V
65	Imp	111	17.41	Imp Rte 111 AT KEYSTONE Rd (P17.590)	32.91293	-115.50937	297' EAST, ON EB KEYSTONE Rd	TYPE III, 120/240V

MODIFY SIGNAL

E-7

REVISED BY | DATE REVISED
MERVIN FULLENWIDER | LOUIE LA COMPTE
CALCULATED-DESIGNED BY | CHECKED BY
FUNCTIONAL SUPERVISOR: RAJPREET SINGH
STATE OF CALIFORNIA - DEPARTMENT OF TRANSPORTATION
Caltrans® TRAFFIC ELECTRICAL

LAST REVISION 10-09-15 | DATE PLOTTED => 12-OCT-2015 | TIME PLOTTED => 15:36

Dist	COUNTY	ROUTE	POST MILES TOTAL PROJECT	SHEET No.	TOTAL SHEETS
11	Imp, SD	5,7,8,15 52, etc	Var	21	59

M Fullenwider 10-02-15
REGISTERED ELECTRICAL ENGINEER DATE

10-12-15
PLANS APPROVAL DATE

REGISTERED PROFESSIONAL ENGINEER MERVIN D. FULLENWIDER No. E20211 Exp. 3-31-17 ELECTRICAL STATE OF CALIFORNIA

THE STATE OF CALIFORNIA OR ITS OFFICERS OR AGENTS SHALL NOT BE RESPONSIBLE FOR THE ACCURACY OR COMPLETENESS OF SCANNED COPIES OF THIS PLAN SHEET.

NOTES:

1. REFER TO THE INFORMATION HANDOUT, SECTION 7, FOR MORE INFORMATION.
2. REFER TO THE ELECTRICAL DETAILS SHEET E-13 FOR MORE INFORMATION.
3. GPS COORDINATES ARE APPROXIMATE VALUES.
   THE GPS COORDINATES ARE NAD 1983.

ABBREVIATIONS:

GPS - GLOBAL POSITIONING SYSTEM
NAD - NORTH AMERICAN DATUM

MODIFY AIR CONDITIONING

LOCATION OF CONSTRUCTION	COMMUNICATION HUB	COUNTY	ROUTE	PM	ADDITIONAL LOCATION INFORMATION	GPS COORDINATES	
						LATITUDE	LONGITUDE
16	6	SD	56	9.71	WB Rte 56, WEST OF Rte 15	32.96465	-117.09712
17	3	SD	94	1.47	WB Rte 94 OFF-RAMP TO F-STREET BEFORE THE Rte 5 BRIDGE	32.71383	-117.14682
18	4	SD	94	3.98	NB Rte 805 CONNECTOR TO WB Rte 94, RIGHT SIDE ON THE HILL	32.71925	-117.10461
20	5	SD	163	10.93	NB Rte 163 IN THE CALTRANS' KEARNY VILLA MAINTENANCE YARD	32.85496	-117.11763

SERVICE EQUIPMENT ENCLOSURE INFORMATION

LOCATION OF CONSTRUCTION	LOCATION OF SERVICE EQUIPMENT ENCLOSURE FROM COMMUNICATION HUB	SERVICE EQUIPMENT ENCLOSURE TYPE AND VOLTAGE
16	80' SW	TYPE III, 120/240 V
17	130' SW	TYPE III, 120 V
18	60' SW	TRANSFORMER DISCONNECT CABINET, 120/240 V
20	660' SW	TYPE III, 120/240 V

MODIFY AIR CONDITIONING

E-8

REVISED BY | DATE REVISED
LOUIE LA COMPTE | MERVIN FULLENWIDER
CALCULATED-DESIGNED BY | CHECKED BY
FUNCTIONAL SUPERVISOR | RAJPREET SINGH
STATE OF CALIFORNIA - DEPARTMENT OF TRANSPORTATION
Caltrans TRAFFIC ELECTRICAL

LAST REVISION 10-09-15 | DATE PLOTTED => 12-OCT-2015 TIME PLOTTED => 15:36

Dist	COUNTY	ROUTE	POST MILES TOTAL PROJECT	SHEET No.	TOTAL SHEETS
11	Imp, SD	5,7,8,15 52, etc	Var	22	59

REGISTERED ELECTRICAL ENGINEER — DATE: 10-02-15

PLANS APPROVAL DATE: 10-12-15

REGISTERED PROFESSIONAL ENGINEER — MERVIN D. FULLENWIDER No. E20211 Exp. 3-31-17 ELECTRICAL — STATE OF CALIFORNIA

THE STATE OF CALIFORNIA OR ITS OFFICERS OR AGENTS SHALL NOT BE RESPONSIBLE FOR THE ACCURACY OR COMPLETENESS OF SCANNED COPIES OF THIS PLAN SHEET.

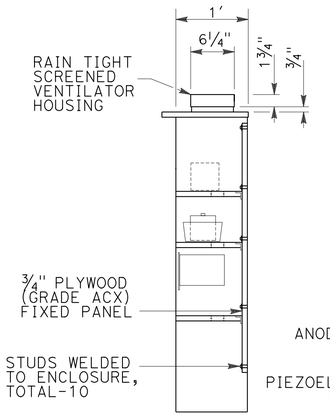

SECTION A-A

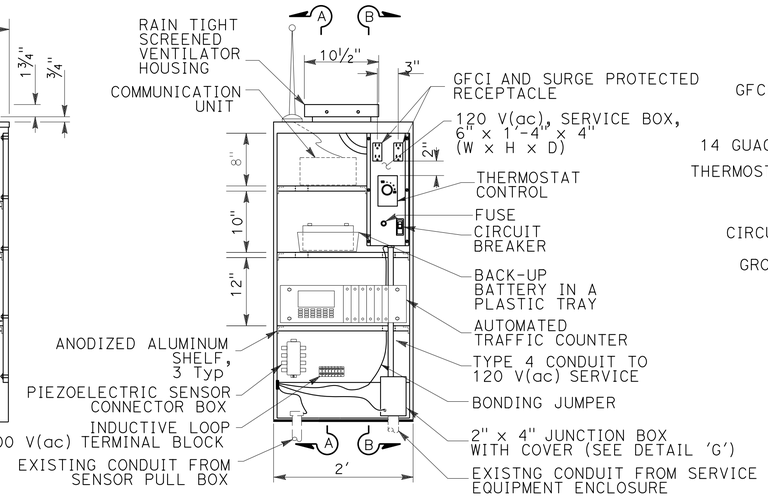

FRONT VIEW

INTERIOR

DETAIL 'A'

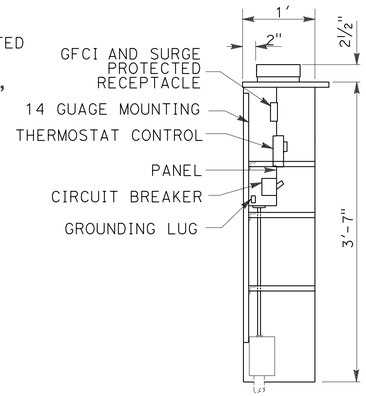

SECTION B-B

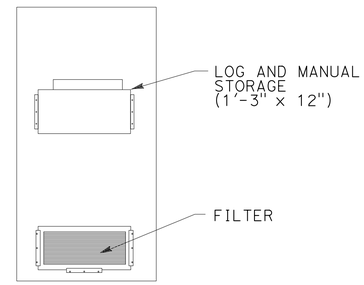

DOOR

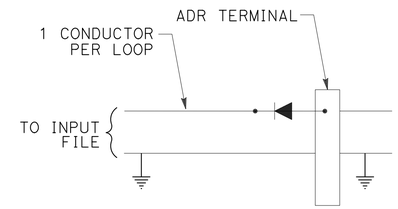

DETECTOR ISOLATION WIRING DIAGRAM

DETAIL 'F'

(TYPICAL)

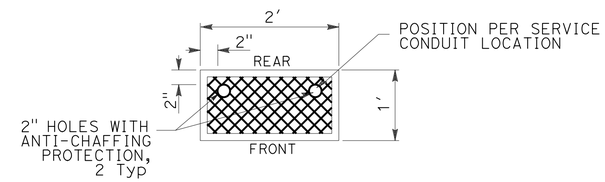

SHELF

DETAIL 'C'

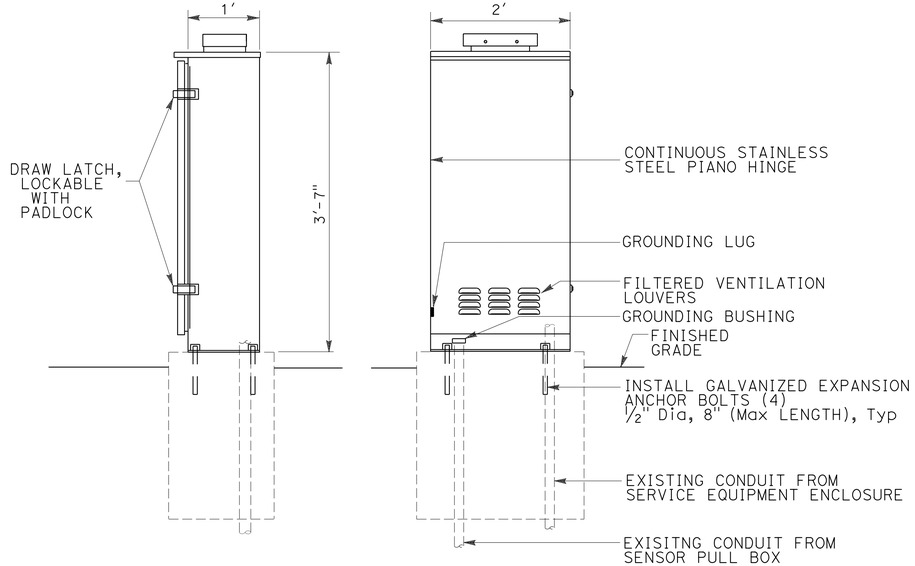

SIDE VIEW

FRONT VIEW

EXTERIOR

DETAIL 'B'

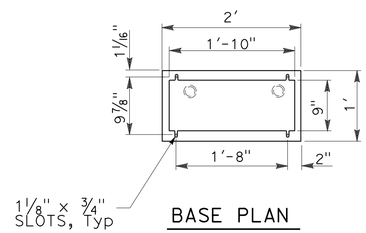

BASE PLAN

DETAIL 'D'

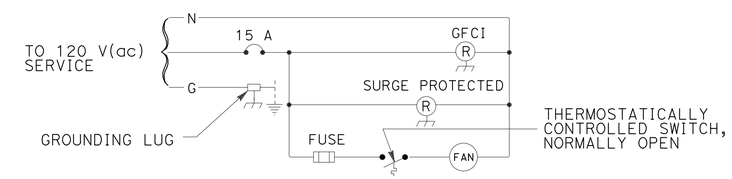

WIRING DIAGRAM

DETAIL 'E'

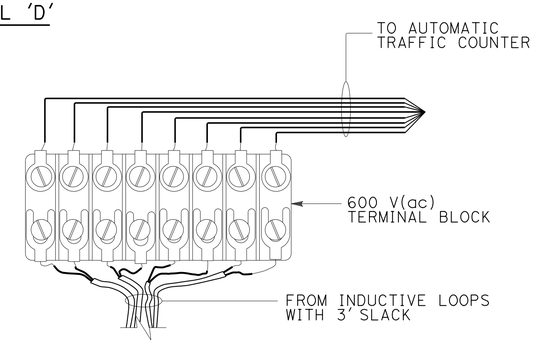

INDUCTIVE LOOP TERMINAL BLOCK

DETAIL F

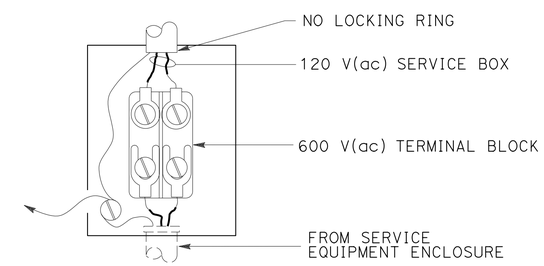

2" X 4" JUNCTION BOX

DETAIL 'G'

MODIFY COUNT STATION

ELECTRICAL DETAILS

NO SCALE

E-9

STATE OF CALIFORNIA - DEPARTMENT OF TRANSPORTATION — Caltrans — TRAFFIC ELECTRICAL

FUNCTIONAL SUPERVISOR: RAJPREET SINGH

CALCULATED-DESIGNED BY: LOUIE LA COMPTE — CHECKED BY: MERVIN FULLENWIDER

REVISED BY — DATE REVISED

LAST REVISION 10-09-15 — DATE PLOTTED => 12-OCT-2015 — TIME PLOTTED => 15:36

Dist	COUNTY	ROUTE	POST MILES TOTAL PROJECT	SHEET No.	TOTAL SHEETS
11	Imp, SD	5,7,8,15 52, etc	Var	23	59

REGISTERED ELECTRICAL ENGINEER — DATE: 10-02-15

PLANS APPROVAL DATE: 10-12-15

REGISTERED PROFESSIONAL ENGINEER — MERVIN D. FULLENWIDER No. E20211 Exp. 3-31-17 ELECTRICAL — STATE OF CALIFORNIA

THE STATE OF CALIFORNIA OR ITS OFFICERS OR AGENTS SHALL NOT BE RESPONSIBLE FOR THE ACCURACY OR COMPLETENESS OF SCANNED COPIES OF THIS PLAN SHEET.

NOTES:

1. PIEZOELECTRIC SENSOR CONNECTION TO THE PIEZOELECTRIC CABLE MUST BE BELOW THE LANE LINE OR ETW.
2. REFER TO REVISED STANDARD PLAN RSP ES-5D FOR CONDUIT TERMINATION.
3. THE VALUE OF A' IS THE DIFFERENCE OF THE LOOP FROM EITHER THE LANE LINE OR ETW.

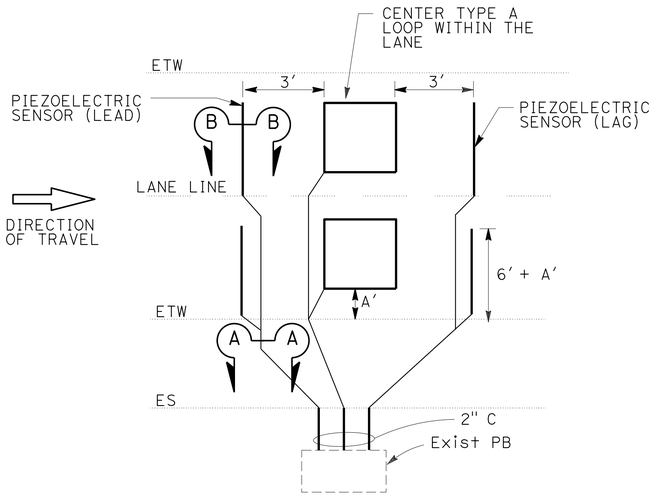

PIEZOELECTRIC-LOOP-PIEZOELECTRIC DETECTOR INSTALLATION
(TYPICAL AC ROADWAY)
DETAIL 'A'
(SEE NOTE 3)

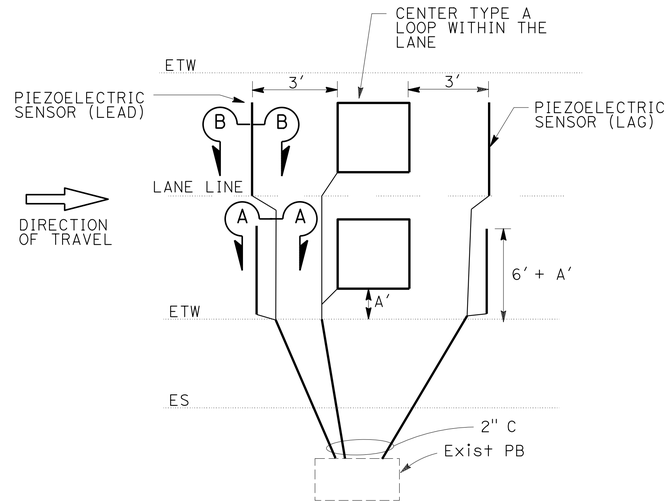

PIEZOELECTRIC-LOOP-PIEZOELECTRIC DETECTOR INSTALLATION
(TYPICAL PCC ROADWAY)
DETAIL 'B'
(SEE NOTE 3)

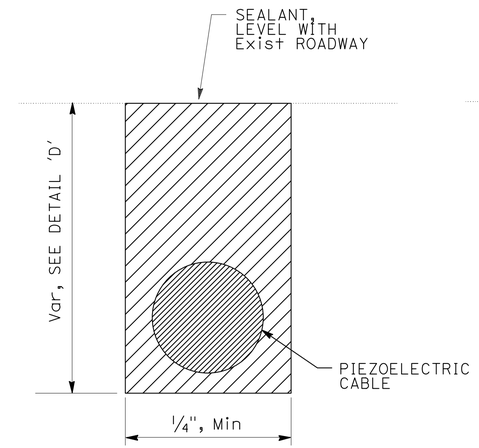

PIEZOELECTRIC CABLE INSTALLATION
SECTION A-A

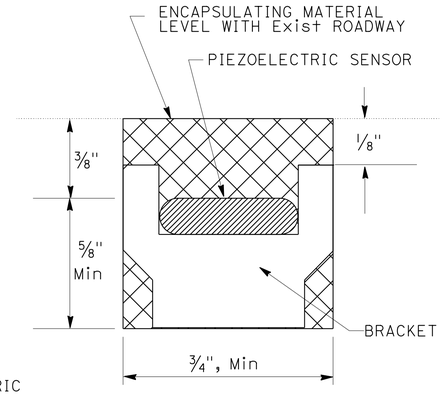

PIEZOELECTRIC SENSOR INSTALLATION
SECTION B-B

COUNT STATION
DETECTOR INSTALLATION
DETAIL 'C'

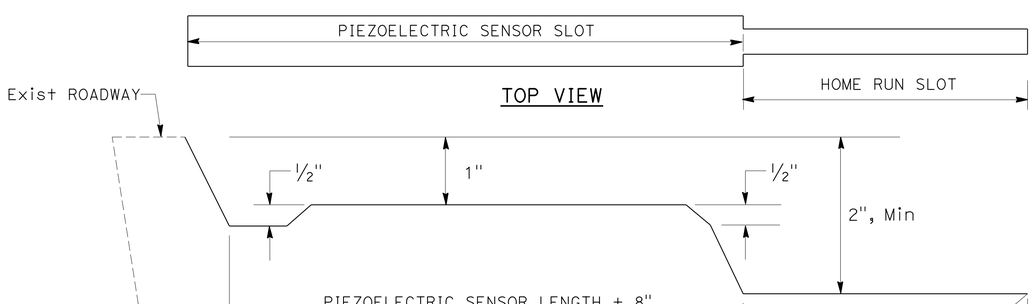

TOP VIEW

SIDE VIEW
SAWCUT
DETAIL 'E'

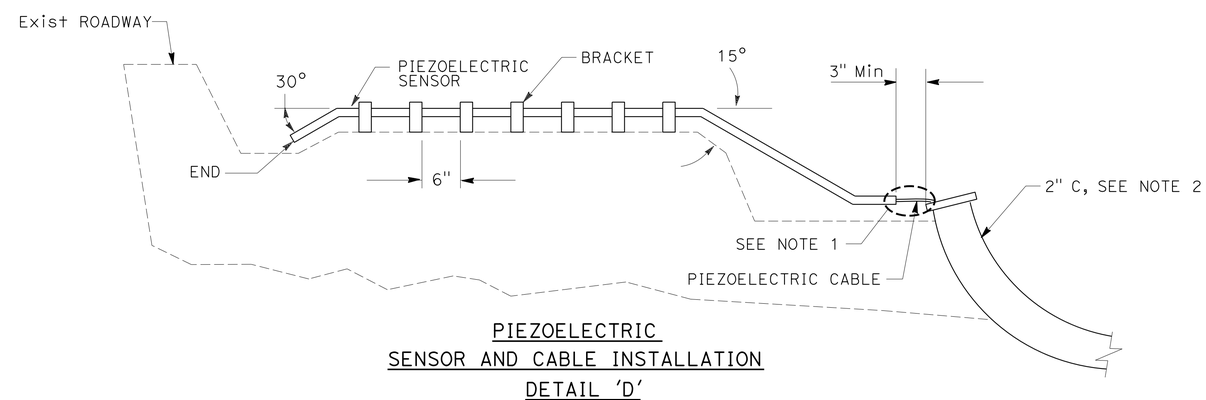

PIEZOELECTRIC
SENSOR AND CABLE INSTALLATION
DETAIL 'D'

MODIFY COUNT STATION

ELECTRICAL DETAILS

NO SCALE

E-10

STATE OF CALIFORNIA - DEPARTMENT OF TRANSPORTATION
Caltrans® TRAFFIC ELECTRICAL

FUNCTIONAL SUPERVISOR: RAJPREET SINGH
CALCULATED-DESIGNED BY: LOUIE LA COMPTE
CHECKED BY: MERVIN FULLENWIDER
REVISED BY / DATE REVISED

LAST REVISION 10-12-15 | DATE PLOTTED => 12-OCT-2015 | TIME PLOTTED => 15:36

Dist	COUNTY	ROUTE	POST MILES TOTAL PROJECT	SHEET No.	TOTAL SHEETS
11	Imp, SD	5,7,8,15 52, etc	Var	24	59

REGISTERED ELECTRICAL ENGINEER — DATE: 10-02-15

PLANS APPROVAL DATE: 10-12-15

REGISTERED PROFESSIONAL ENGINEER — MERVIN D. FULLENWIDER No. E20211 Exp. 3-31-17 ELECTRICAL — STATE OF CALIFORNIA

THE STATE OF CALIFORNIA OR ITS OFFICERS OR AGENTS SHALL NOT BE RESPONSIBLE FOR THE ACCURACY OR COMPLETENESS OF SCANNED COPIES OF THIS PLAN SHEET.

NOTES:

1. PULL BOX COVER MUST BE MARKED COUNT STATION.
2. SEE DETAIL 'A', FOR FOUNDATION DETAIL.
3. FOR CABINET INFORMATION AND INSTALLATION SEE ELECTRICAL DETAILS SHEET E-9.

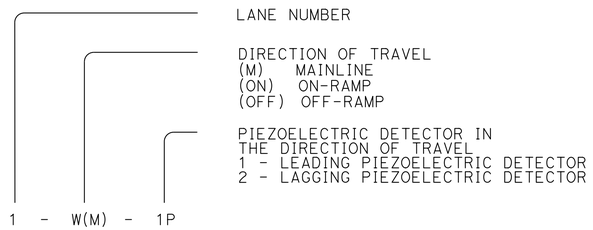

PIEZOELECTRIC DETECTOR IDENTIFICATION

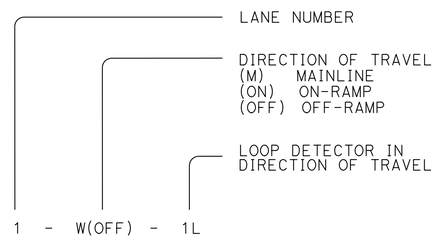

LOOP DETECTOR IDENTIFICATION

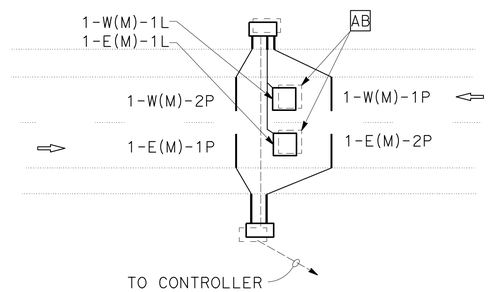

COUNT STATION 968

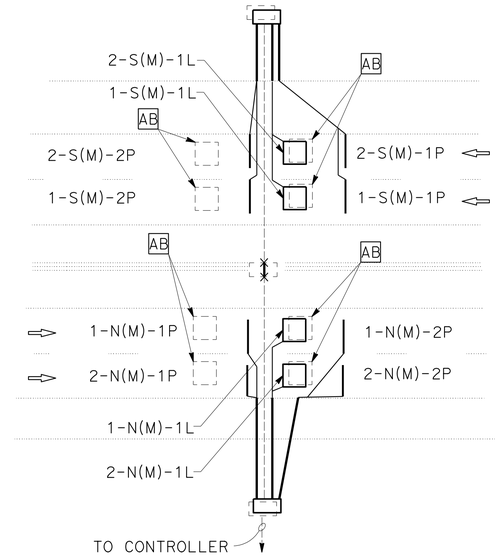

COUNT STATION 717

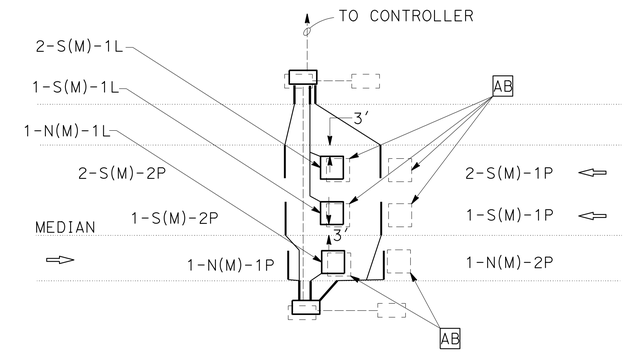

COUNT STATION 821

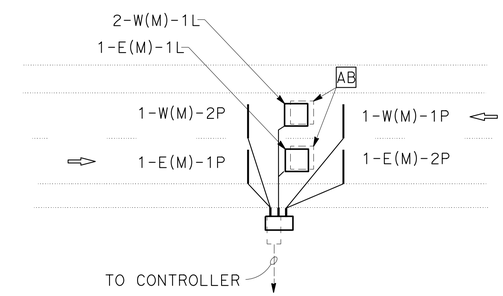

COUNT STATION 831
(SEE NOTE 2)

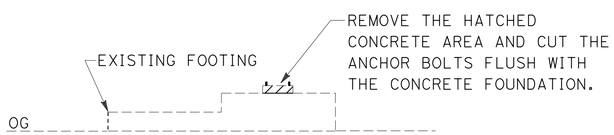

MODIFY EXISTING CONCRETE FOUNDATION
(SEE NOTE 3)
DETAIL 'A'

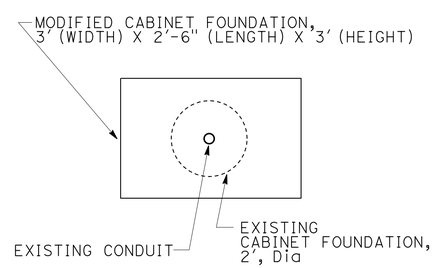

PLAN VIEW

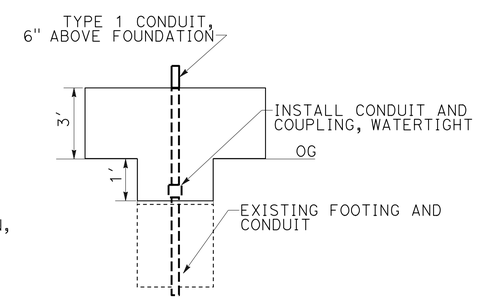

SIDE VIEW
CIRCULAR FOUNDATION

MODIFY EXISTING CONCRETE FOUNDATION
(SEE NOTE 3)
DETAIL 'B'

ELECTRICAL DETAILS

NO SCALE

E-11

STATE OF CALIFORNIA - DEPARTMENT OF TRANSPORTATION
Caltrans® TRAFFIC ELECTRICAL

FUNCTIONAL SUPERVISOR: RAJPREET SINGH
CALCULATED-DESIGNED BY: LOUIE LA COMPTE
CHECKED BY: MERVIN FULLENWIDER
REVISED BY
DATE REVISED

LAST REVISION 10-09-15
DATE PLOTTED => 12-OCT-2015
TIME PLOTTED => 15:36

Dist	COUNTY	ROUTE	POST MILES TOTAL PROJECT	SHEET No.	TOTAL SHEETS
11	Imp, SD	5,7,8,15 52, etc	Var	25	59

M Fullenwider 10-02-15
REGISTERED ELECTRICAL ENGINEER DATE

10-12-15
PLANS APPROVAL DATE

REGISTERED PROFESSIONAL ENGINEER MERVIN D. FULLENWIDER No. E20211 Exp. 3-31-17 ELECTRICAL STATE OF CALIFORNIA

THE STATE OF CALIFORNIA OR ITS OFFICERS OR AGENTS SHALL NOT BE RESPONSIBLE FOR THE ACCURACY OR COMPLETENESS OF SCANNED COPIES OF THIS PLAN SHEET.

NOTES:

1. SEE E-11, DETAIL 'B', FOR FOUNDATION DETAIL.
2. SHELF REQUIRED FOR EQUIPMENT.

LANE NUMBER

DIRECTION OF TRAVEL
(M) MAINLINE
(ON) ON-RAMP
(OFF) OFF-RAMP

PIEZOELECTRIC DETECTOR IN THE DIRECTION OF TRAVEL
1 - LEADING PIEZOELECTRIC DETECTOR
2 - LAGGING PIEZOELECTRIC DETECTOR

1 - W(M) - 1P

PIEZOELECTRIC DETECTOR IDENTIFICATION

LANE NUMBER

DIRECTION OF TRAVEL
(M) MAINLINE
(ON) ON-RAMP
(OFF) OFF-RAMP

LOOP DETECTOR IN DIRECTION OF TRAVEL

1 - W(OFF) - 1L

LOOP DETECTOR IDENTIFICATION

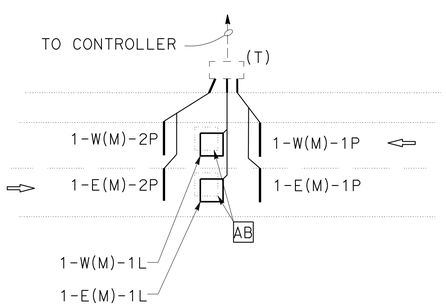

COUNT STATION 719

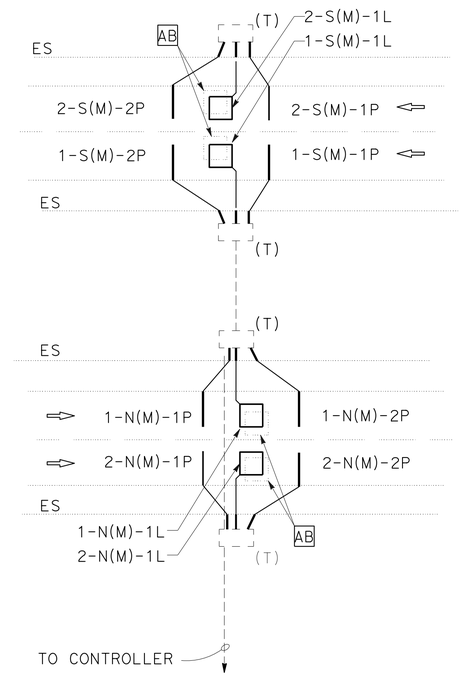

COUNT STATION 402

(SEE NOTE 1)

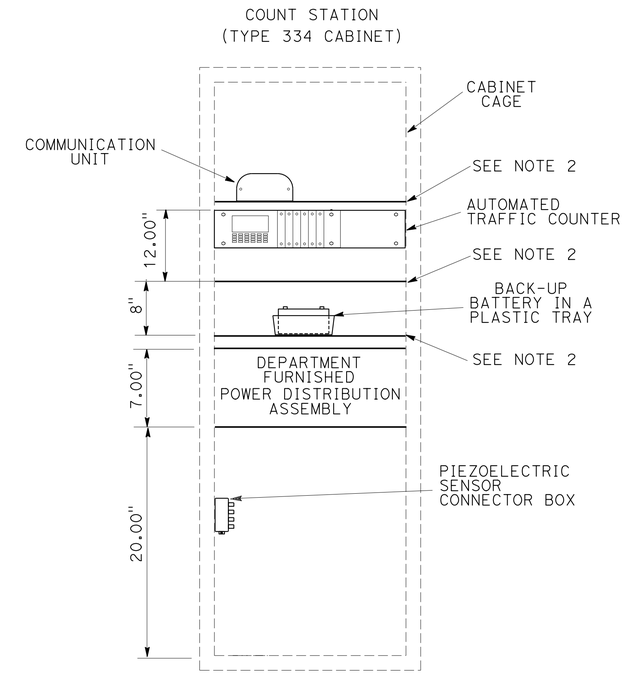

EXISTING COUNT STATION CABINET

(TYPICAL)

DETAIL 'A'

MODIFY COUNT STATION

ELECTRICAL DETAILS

NO SCALE

E-12

STATE OF CALIFORNIA - DEPARTMENT OF TRANSPORTATION
Caltrans TRAFFIC ELECTRICAL

FUNCTIONAL SUPERVISOR: RAJPREET SINGH
CALCULATED-DESIGNED BY: LOUIE LA COMPTE
CHECKED BY: MERVIN FULLENWIDER
REVISED BY
DATE REVISED

LAST REVISION 10-09-15
DATE PLOTTED => 12-OCT-2015
TIME PLOTTED => 15:36

Dist	COUNTY	ROUTE	POST MILES TOTAL PROJECT	SHEET No.	TOTAL SHEETS
11	Imp, SD	5,7,8,15 52, etc	Var	26	59

M Fullenwider 10-02-15
REGISTERED ELECTRICAL ENGINEER DATE

10-12-15
PLANS APPROVAL DATE

REGISTERED PROFESSIONAL ENGINEER
MERVIN D. FULLENWIDER
No. E20211
Exp. 3-31-17
ELECTRICAL
STATE OF CALIFORNIA

THE STATE OF CALIFORNIA OR ITS OFFICERS OR AGENTS SHALL NOT BE RESPONSIBLE FOR THE ACCURACY OR COMPLETENESS OF SCANNED COPIES OF THIS PLAN SHEET.

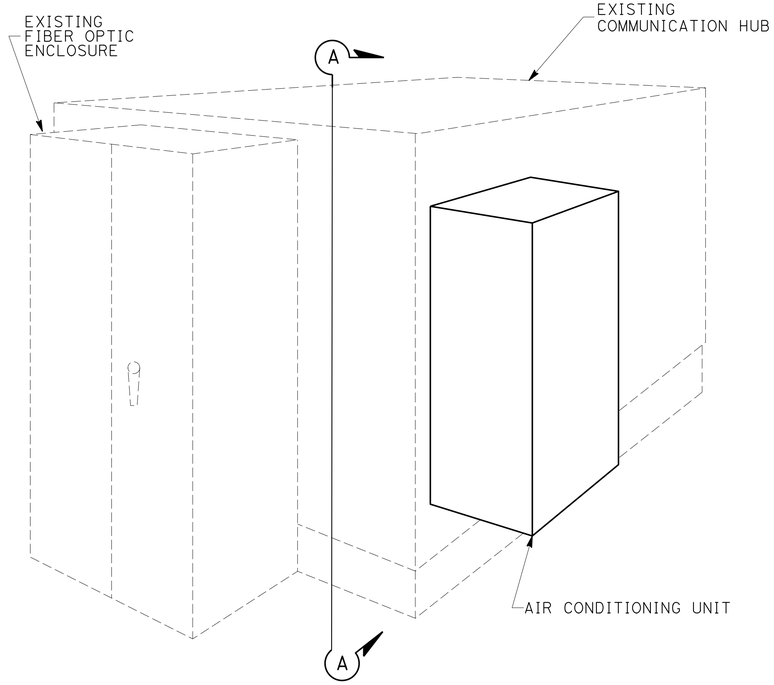

AIR CONDITIONING UNIT

DETAIL 'A'

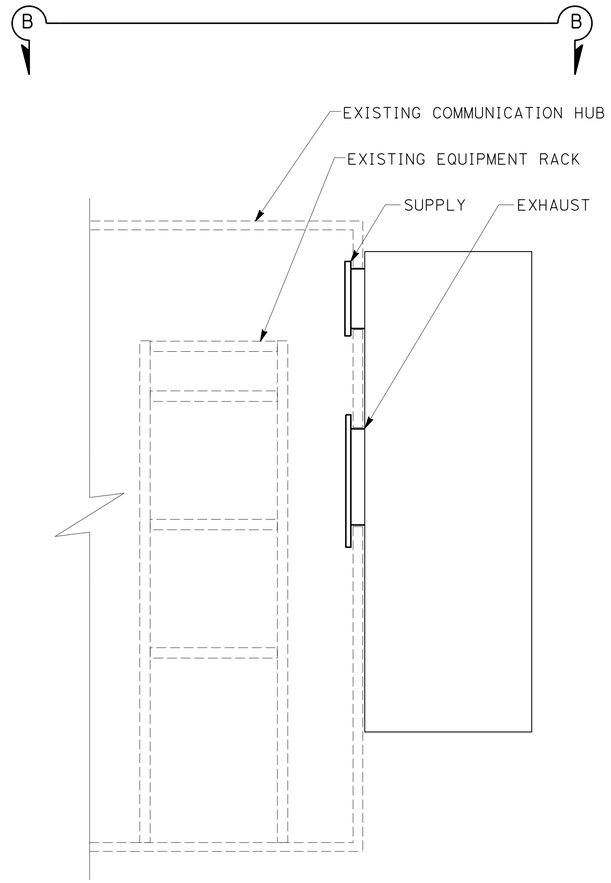

SECTION A-A

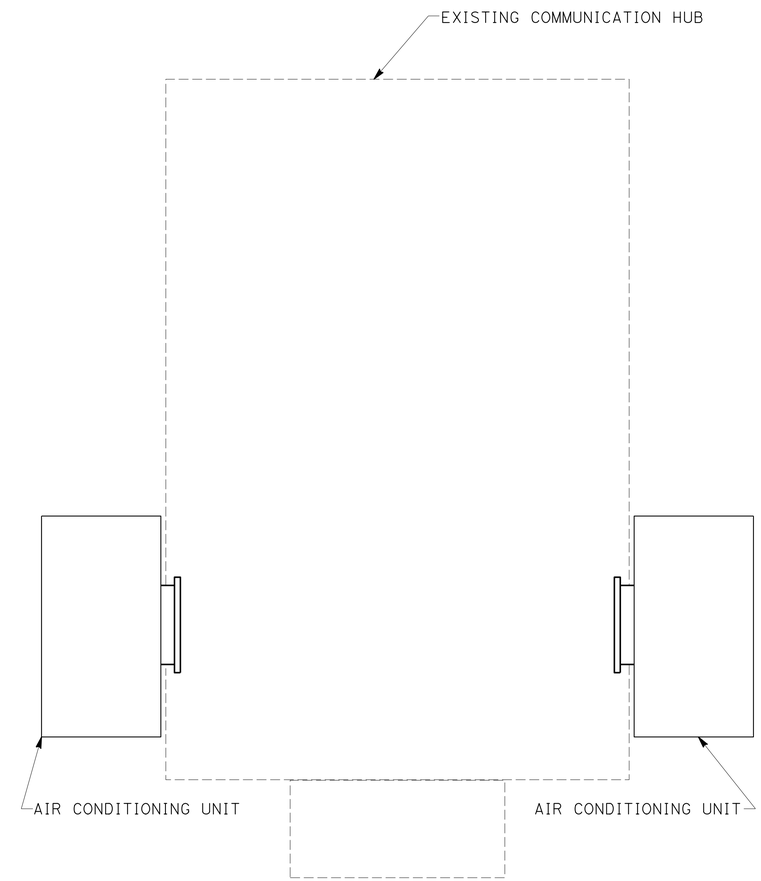

SECTION B-B

MODIFY COMMUNICATION HUB

ELECTRICAL DETAILS

NO SCALE

E-13

STATE OF CALIFORNIA - DEPARTMENT OF TRANSPORTATION
Caltrans® TRAFFIC ELECTRICAL

FUNCTIONAL SUPERVISOR: RAJPREET SINGH
CALCULATED-DESIGNED BY: LOUIE LA COMPTE
CHECKED BY: MERVIN FULLENWIDER
REVISED BY
DATE REVISED

LAST REVISION 10-09-15
DATE PLOTTED => 12-OCT-2015
TIME PLOTTED => 15:36

Dist	COUNTY	ROUTE	POST MILES TOTAL PROJECT	SHEET No.	TOTAL SHEETS
11	Imp, SD	5,7,8,15 52, etc	Var	27	59

M Fullenwider 10-02-15
REGISTERED ELECTRICAL ENGINEER DATE

10-12-15
PLANS APPROVAL DATE

REGISTERED PROFESSIONAL ENGINEER MERVIN D. FULLENWIDER No. E20211 Exp. 3-31-17 ELECTRICAL STATE OF CALIFORNIA

THE STATE OF CALIFORNIA OR ITS OFFICERS OR AGENTS SHALL NOT BE RESPONSIBLE FOR THE ACCURACY OR COMPLETENESS OF SCANNED COPIES OF THIS PLAN SHEET.

NOTE:

1. ANTENNA MUST BE POSITIONED FOR BEST RECEPTION.

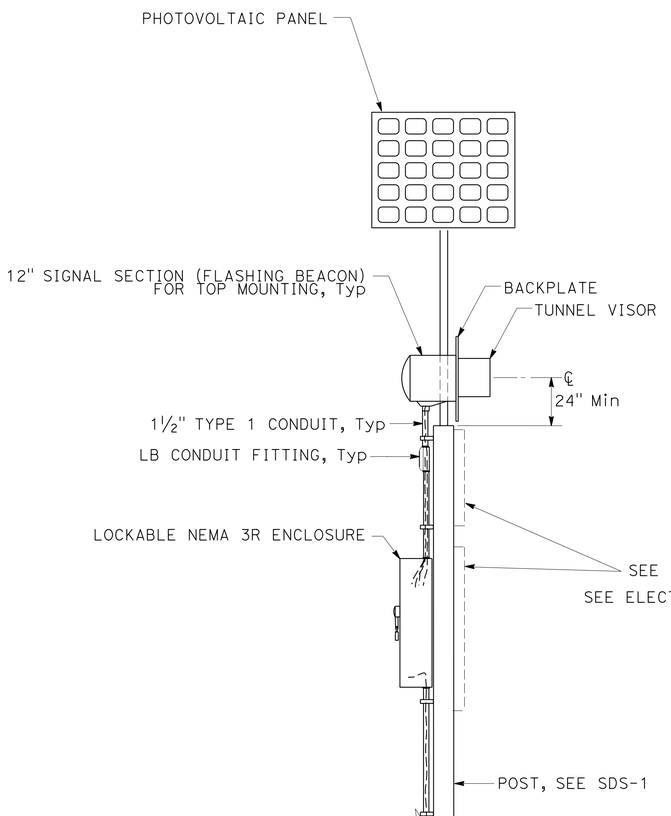

SIDE VIEW

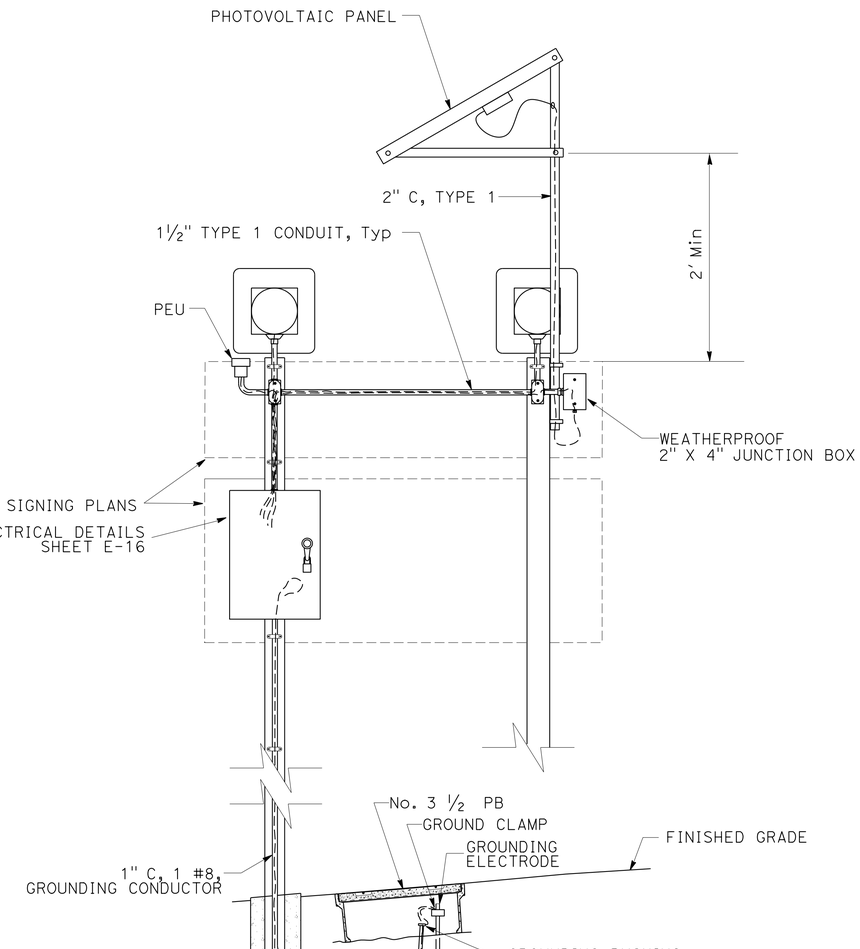

REAR VIEW

MODIFY HIGHWAY ADVISORY RADIO SYSTEM

ELECTRICAL DETAILS

NO SCALE

E-14

STATE OF CALIFORNIA - DEPARTMENT OF TRANSPORTATION
Caltrans® TRAFFIC ELECTRICAL

FUNCTIONAL SUPERVISOR: RAJPREET SINGH
CALCULATED-DESIGNED BY: LOUIE LA COMPTE
CHECKED BY: MERVIN FULLENWIDER
REVISED BY
DATE REVISED

LAST REVISION 10-09-15
DATE PLOTTED => 12-OCT-2015
TIME PLOTTED => 15:36

Dist	COUNTY	ROUTE	POST MILES TOTAL PROJECT	SHEET No.	TOTAL SHEETS
11	Imp, SD	5,7,8,15 52, etc	Var	28	59

REGISTERED ELECTRICAL ENGINEER — DATE: 10-02-15

PLANS APPROVAL DATE: 10-12-15

REGISTERED PROFESSIONAL ENGINEER — MERVIN D. FULLENWIDER No. E20211 Exp. 3-31-17 ELECTRICAL — STATE OF CALIFORNIA

THE STATE OF CALIFORNIA OR ITS OFFICERS OR AGENTS SHALL NOT BE RESPONSIBLE FOR THE ACCURACY OR COMPLETENESS OF SCANNED COPIES OF THIS PLAN SHEET.

ABBREVIATION:

AWG - AMERICAN WIRE GAUGE

NOTE:

1. ALL CONDUCTORS SHALL BE No. 10 AWG Min.

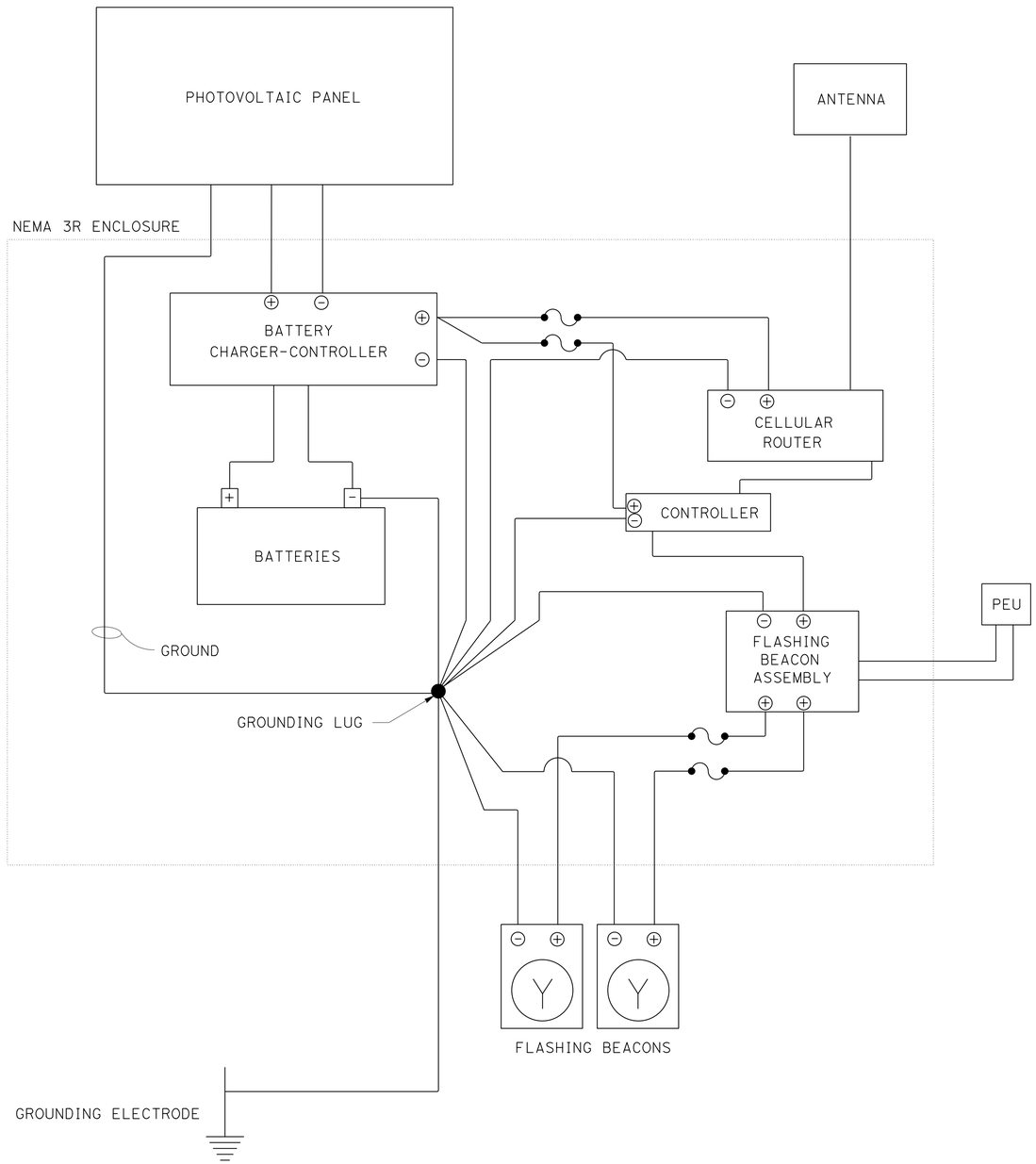

MODIFY HIGHWAY ADVISORY RADIO SYSTEM

WIRING DIAGRAM

NO SCALE

ELECTRICAL DETAILS

E-15

STATE OF CALIFORNIA - DEPARTMENT OF TRANSPORTATION

Caltrans® TRAFFIC ELECTRICAL

FUNCTIONAL SUPERVISOR: RAJPREET SINGH

CALCULATED-DESIGNED BY: LOUIE LA COMPTE

CHECKED BY: MERVIN FULLENWIDER

REVISED BY

DATE REVISED

LAST REVISION 10-09-15 | DATE PLOTTED => 12-OCT-2015 | TIME PLOTTED => 15:36

Dist	COUNTY	ROUTE	POST MILES TOTAL PROJECT	SHEET No.	TOTAL SHEETS
11	Imp, SD	5,7,8,15 52, etc	Var	29	59

M Fullenwider 10-02-15
REGISTERED ELECTRICAL ENGINEER DATE

10-12-15
PLANS APPROVAL DATE

REGISTERED PROFESSIONAL ENGINEER MERVIN D. FULLENWIDER No. E20211 Exp. 3-31-17 ELECTRICAL STATE OF CALIFORNIA

THE STATE OF CALIFORNIA OR ITS OFFICERS OR AGENTS SHALL NOT BE RESPONSIBLE FOR THE ACCURACY OR COMPLETENESS OF SCANNED COPIES OF THIS PLAN SHEET.

NOTES:

1. INSTALL THE HAR SIGN 10 FT EAST OF THE MBGR'S END POST.
2. INSTALL THE HAR SIGN 10 FT NORTH OF THE MBGR'S END POST.
3. PLACE THE HAR SIGN 11 FEET WEST OF BRIDGE BARRIER.
4. SEE HIGHWAY ADVISORY RADIO SYSTEM, ELECTRICAL DETAILS SHEET E-14.
5. SEE SIGNING PLANS FOR SIGN DETAILS.

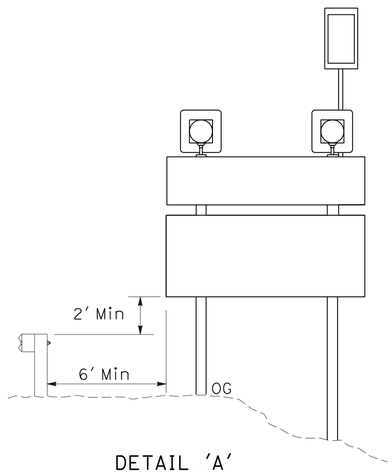

DETAIL 'A'

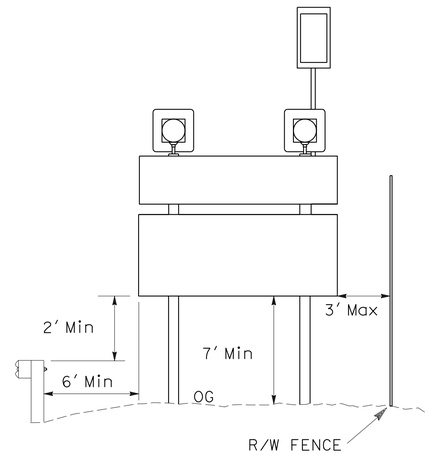

DETAIL 'C'
(SEE NOTE 1)

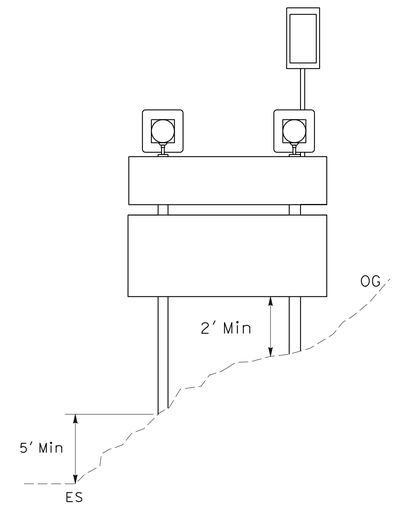

DETAIL 'D'

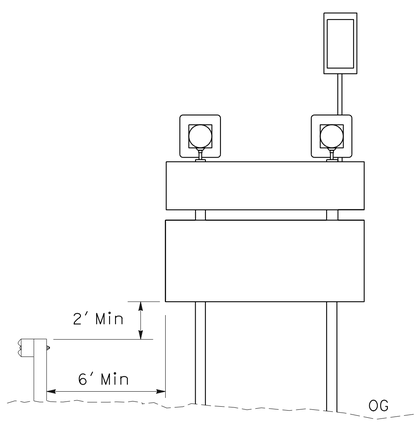

DETAIL 'E'
(SEE NOTE 1)

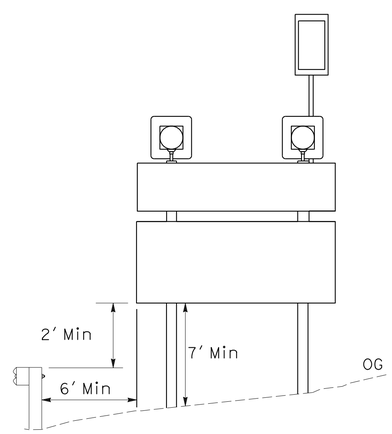

DETAIL 'F'
(SEE NOTE 2)

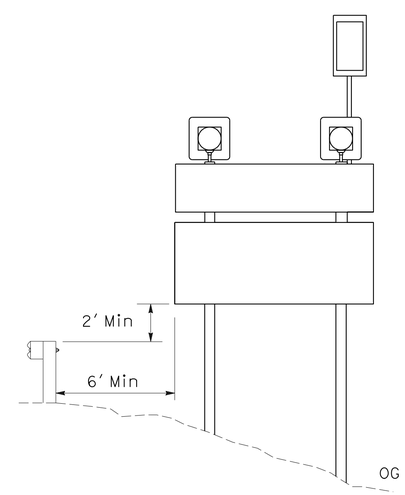

DETAIL 'G'
(SEE NOTE 3)

MODIFY HIGHWAY ADVISORY RADIO SYSTEM

ELECTRICAL DETAILS

NO SCALE

E-16

STATE OF CALIFORNIA - DEPARTMENT OF TRANSPORTATION
Caltrans® TRAFFIC ELECTRICAL

FUNCTIONAL SUPERVISOR: RAJPREET SINGH

CALCULATED-DESIGNED BY: LOUIE LA COMPTE
CHECKED BY: MERVIN FULLENWIDER

REVISED BY
DATE REVISED

LAST REVISION 10-09-15
DATE PLOTTED => 12-OCT-2015
TIME PLOTTED => 15:36

Dist	COUNTY	ROUTE	POST MILES TOTAL PROJECT	SHEET No.	TOTAL SHEETS
11	Imp, SD	5,7,8,15 52, etc	Var	30	59

M Fullenwider 10-02-15
REGISTERED ELECTRICAL ENGINEER DATE

10-12-15
PLANS APPROVAL DATE

REGISTERED PROFESSIONAL ENGINEER
MERVIN D. FULLENWIDER
No. E20211
Exp. 3-31-17
ELECTRICAL
STATE OF CALIFORNIA

THE STATE OF CALIFORNIA OR ITS OFFICERS OR AGENTS SHALL NOT BE RESPONSIBLE FOR THE ACCURACY OR COMPLETENESS OF SCANNED COPIES OF THIS PLAN SHEET.

NOTES:

1. PLACE THE HAR SIGN 25 FT WEST OF THE BEGINNING OF THE DITCH.
2. PLACE THE HAR SIGN 5 FT SOUTH OF THE SIGN POST.
3. PLACE THE HAR SIGN 7 FT NORTH OF THE OVERHEAD SIGN POST.
4. PLACE THE HAR SIGN 10 FT EAST OF THE BRIDGE BARRIER. IN THE SAME LOCATION AS THE EXISTING HAR SIGN.
5. PLACE THE HAR SIGN 15 FT EAST OF THE OVERHEAD SIGN POST.
6. PLACE THE HAR SIGN 18 FT EAST OF THE OVERHEAD SIGN POST.
7. PLACE THE HAR SIGN IN THE SAME LOCATION OF THE EXISTING HAR SIGN.
8. SEE HIGHWAY ADVISORY RADIO SYSTEM, ELECTRICAL DETAILS SHEET E-14.
9. SEE SIGNING PLANS FOR SIGN DETAILS.

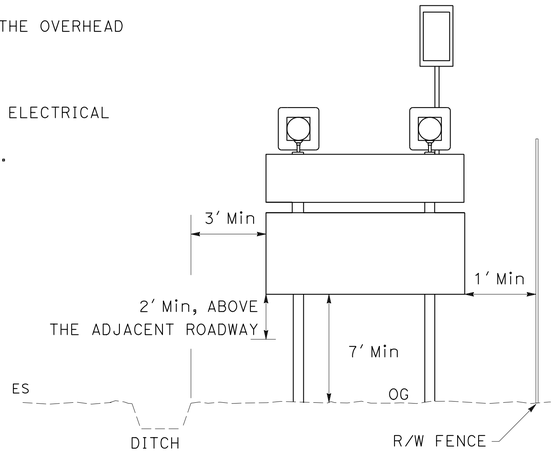

DETAIL 'H'
(SEE NOTE 1)

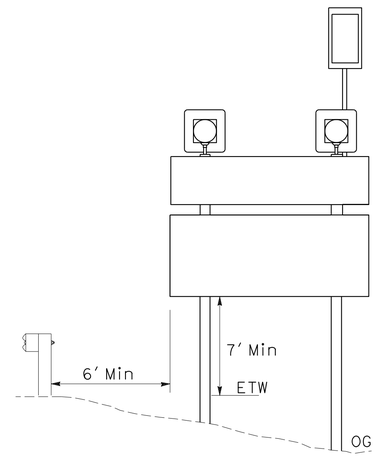

DETAIL 'I'
(SEE NOTE 2)

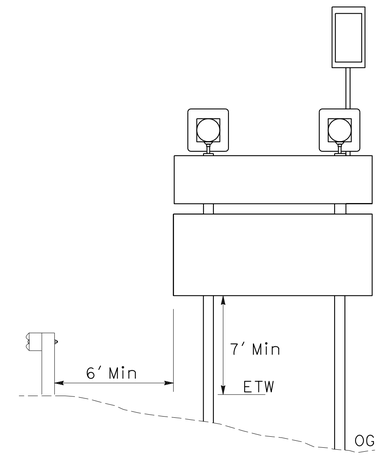

DETAIL 'J'
(SEE NOTE 3)

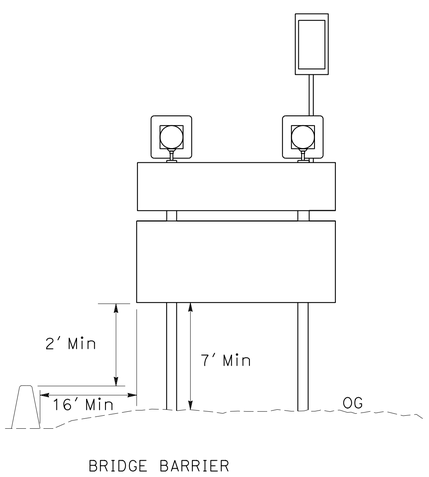

DETAIL 'K'
(SEE NOTE 4)

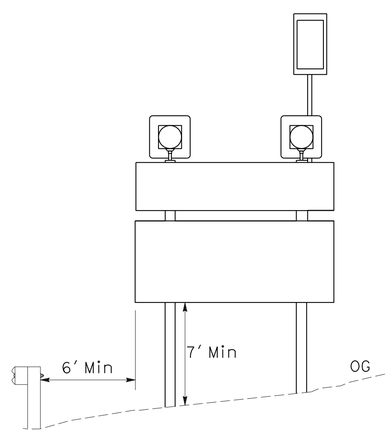

DETAIL 'L'
(SEE NOTE 5)

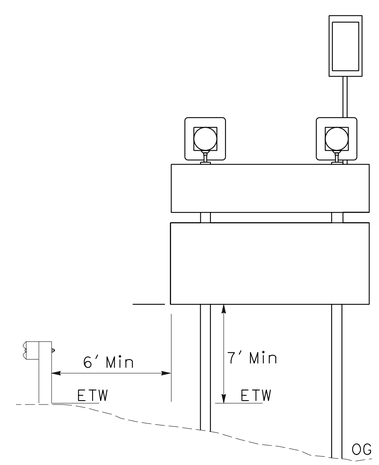

DETAIL 'M'
(SEE NOTE 6)

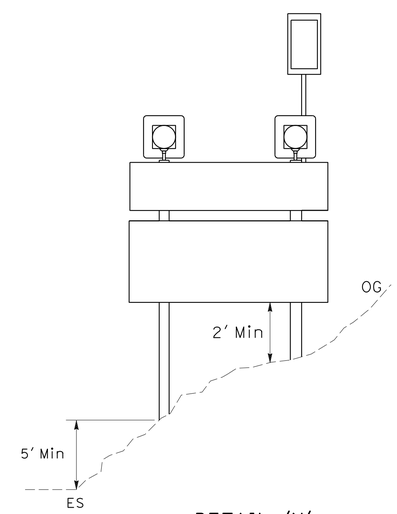

DETAIL 'N'
(SEE NOTE 7)

MODIFY HIGHWAY ADVISORY RADIO SYSTEM

ELECTRICAL DETAILS

NO SCALE

E-17

STATE OF CALIFORNIA - DEPARTMENT OF TRANSPORTATION
Caltrans® TRAFFIC ELECTRICAL

FUNCTIONAL SUPERVISOR: RAJPREET SINGH
CALCULATED-DESIGNED BY: LOUIE LA COMPTE
CHECKED BY: MERVIN FULLENWIDER
REVISED BY
DATE REVISED

LAST REVISION 10-09-15 | DATE PLOTTED => 12-OCT-2015 | TIME PLOTTED => 15:36

Dist	COUNTY	ROUTE	POST MILES TOTAL PROJECT	SHEET No.	TOTAL SHEETS
11	Imp, SD	5,7,8,15 52, etc	Var	31	59

REGISTERED ELECTRICAL ENGINEER — DATE 10-02-15

10-12-15
PLANS APPROVAL DATE

REGISTERED PROFESSIONAL ENGINEER — MERVIN D. FULLENWIDER — No. E20211 — Exp. 3-31-17 — ELECTRICAL — STATE OF CALIFORNIA

THE STATE OF CALIFORNIA OR ITS OFFICERS OR AGENTS SHALL NOT BE RESPONSIBLE FOR THE ACCURACY OR COMPLETENESS OF SCANNED COPIES OF THIS PLAN SHEET.

LEGEND AND NOTE:

1. RC EXISTING POLE AND FOUNDATION.

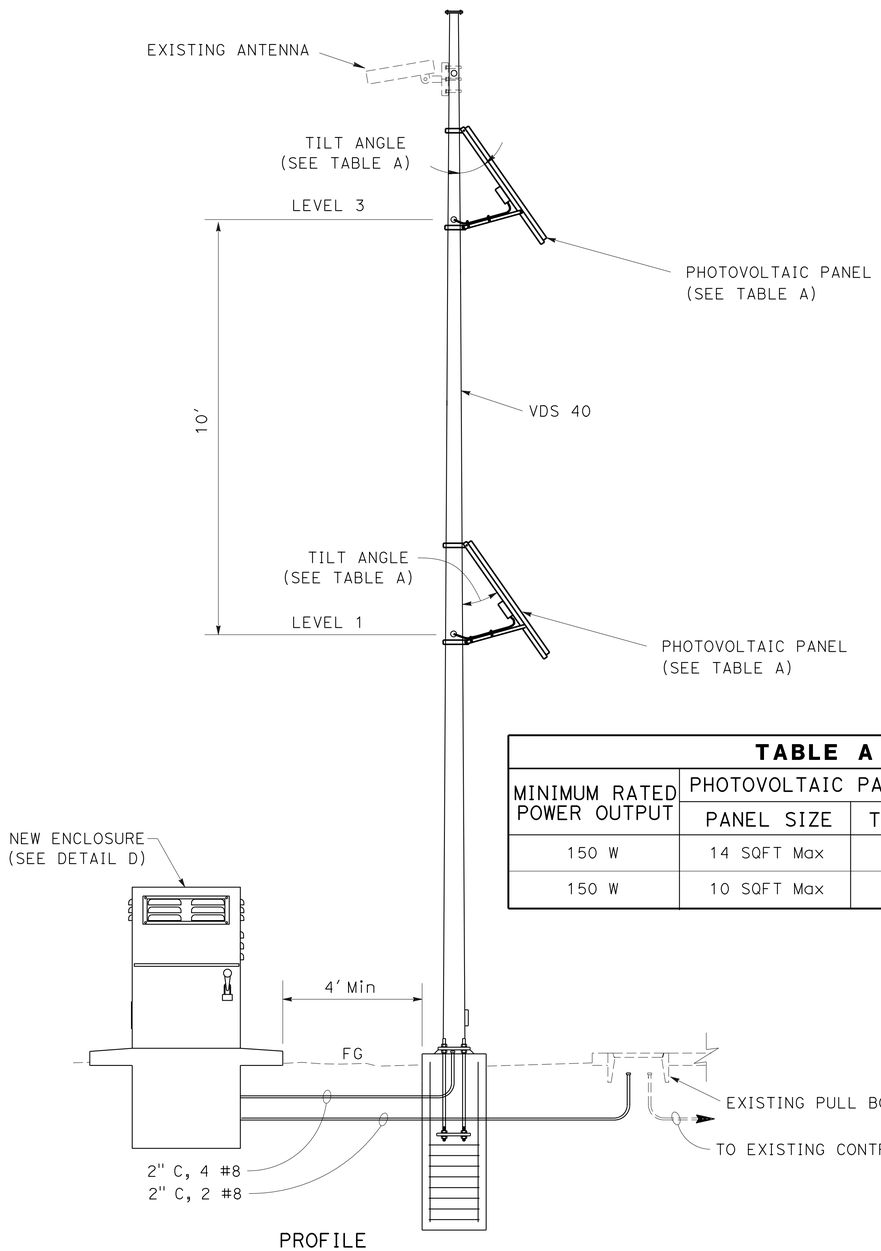

PROFILE
DETAIL A

TABLE A			
MINIMUM RATED POWER OUTPUT	PHOTOVOLTAIC PANEL LIMITS		NOTE
	PANEL SIZE	TILT ANGLE	
150 W	14 SQFT Max	37°	LEVEL 1
150 W	10 SQFT Max	37°	LEVEL 3

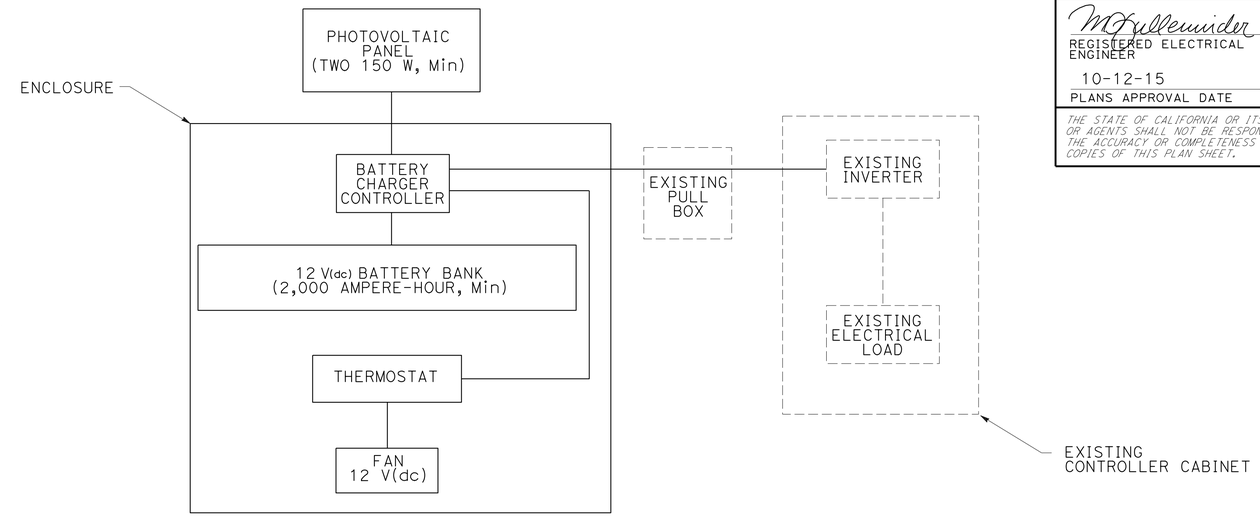

BLOCK DIAGRAM
DETAIL 'B'

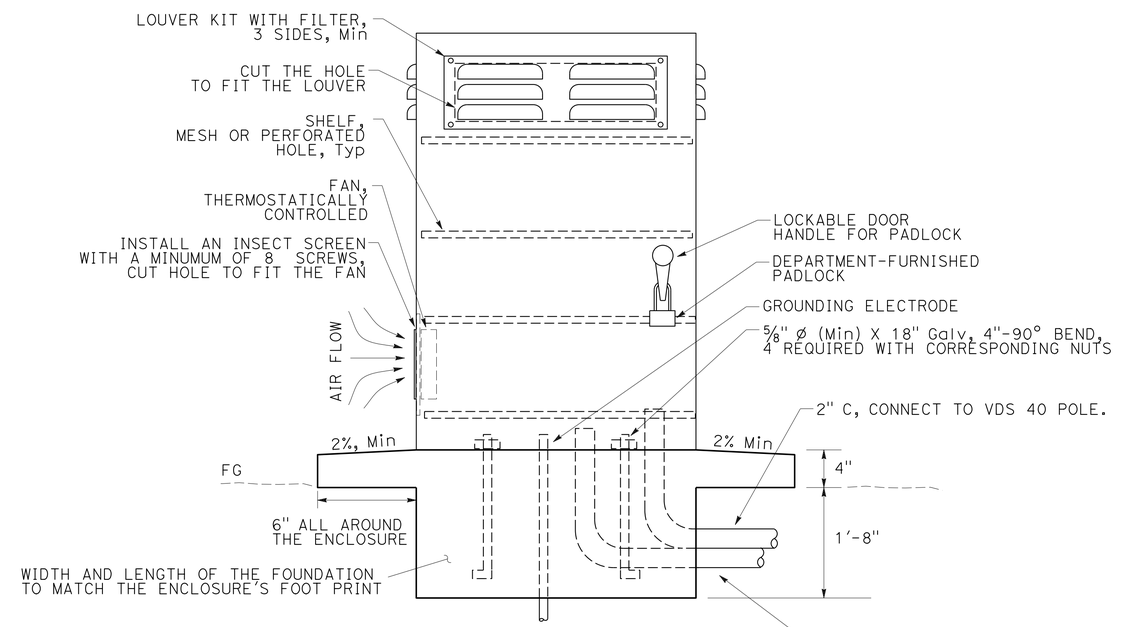

ENCLOSURE
DETAIL 'D'

MODIFY PHOTOVOLTAIC SYSTEM

ELECTRICAL DETAILS

NO SCALE

E-18

STATE OF CALIFORNIA - DEPARTMENT OF TRANSPORTATION
Caltrans® TRAFFIC ELECTRICAL

FUNCTIONAL SUPERVISOR: RAJPREET SINGH
CALCULATED-DESIGNED BY: LOUIE LA COMPTE
CHECKED BY: MERVIN FULLENWIDER
REVISED BY
DATE REVISED

LAST REVISION 10-09-15
DATE PLOTTED => 12-OCT-2015
TIME PLOTTED => 15:36

Dist	COUNTY	ROUTE	POST MILES TOTAL PROJECT	SHEET No.	TOTAL SHEETS
11	Imp, SD	5,7,8,15 52, etc	Var	32	59

M Fullenwider 10-02-15
REGISTERED ELECTRICAL ENGINEER DATE

10-12-15
PLANS APPROVAL DATE

REGISTERED PROFESSIONAL ENGINEER MERVIN D. FULLENWIDER No. E20211 Exp. 3-31-17 ELECTRICAL STATE OF CALIFORNIA

THE STATE OF CALIFORNIA OR ITS OFFICERS OR AGENTS SHALL NOT BE RESPONSIBLE FOR THE ACCURACY OR COMPLETENESS OF SCANNED COPIES OF THIS PLAN SHEET.

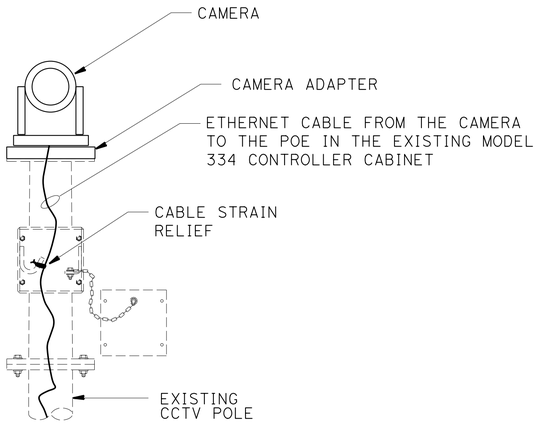

DETAIL 'A'

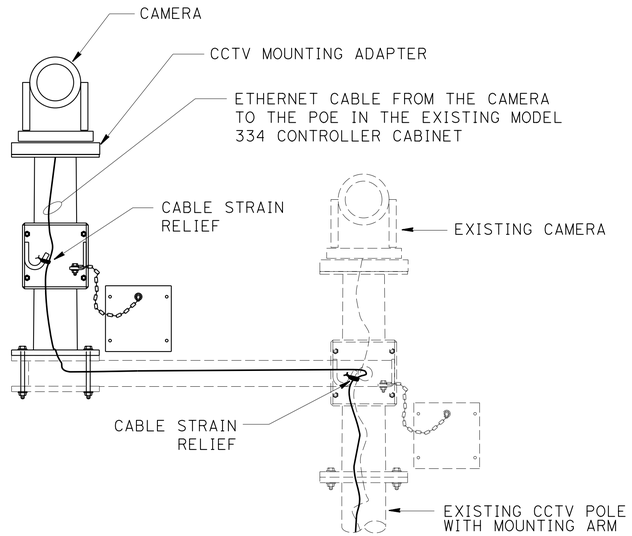

DETAIL 'B'

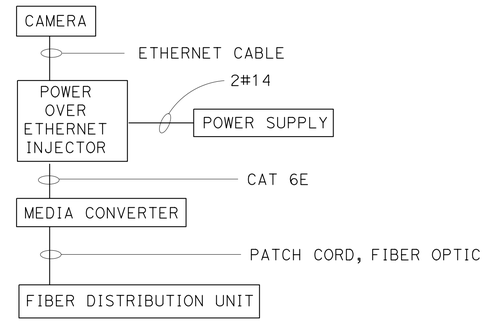

DETAIL 'C'

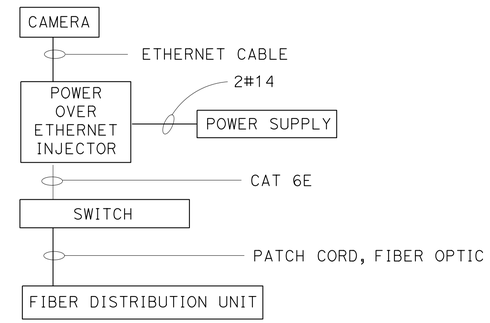

DETAIL 'D'

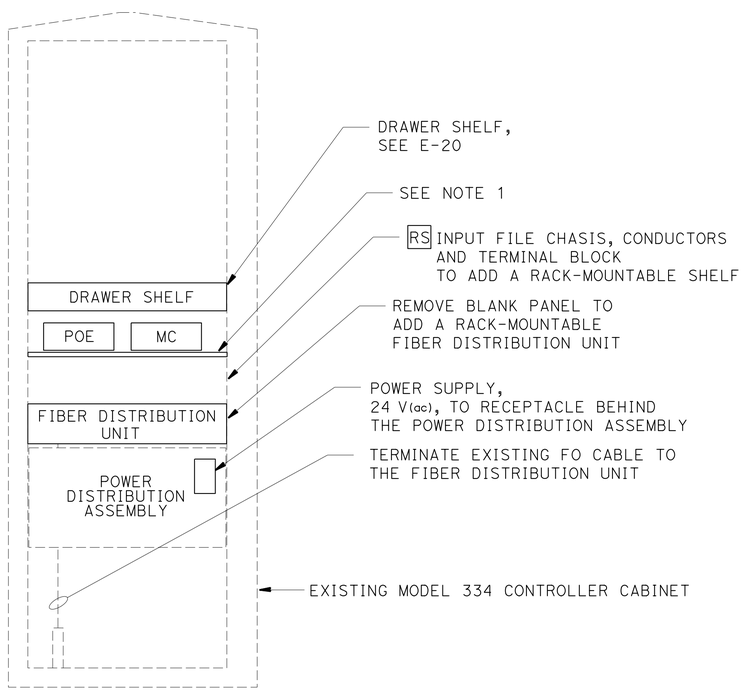

DETAIL 'E'

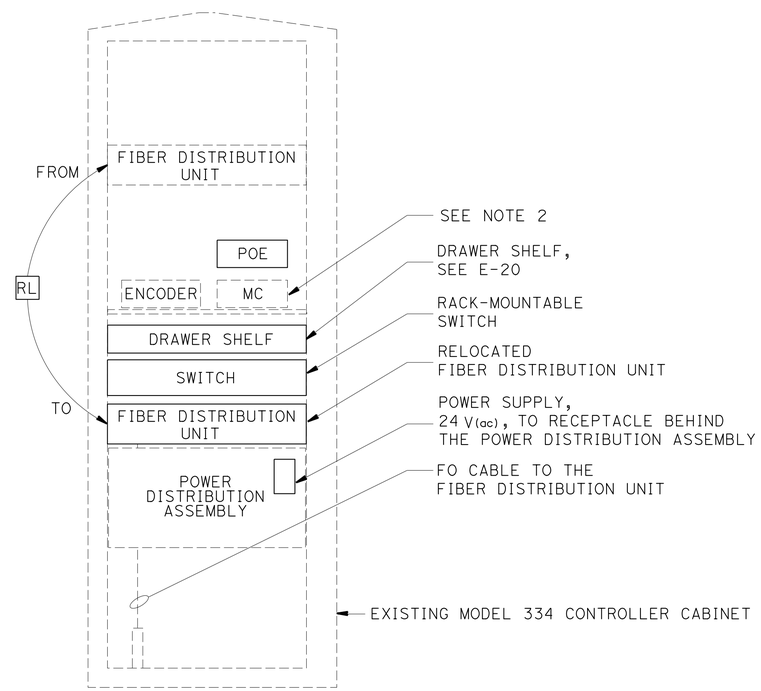

DETAIL 'F'

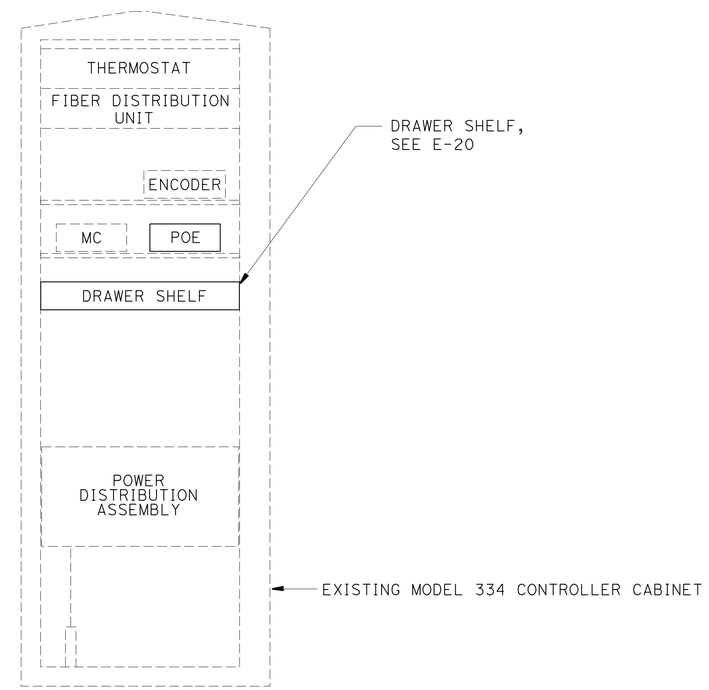

DETAIL 'G'

ABBREVIATIONS:

MC - MEDIA CONVERTER
POE - POWER OVER ETHERNET

LEGEND AND NOTES:

1. A FULL SHELF FOR POWER OVER ETHERNET INJECTOR AND REUSED MEDIA CONVERTER FROM LOCATION 40.
2. RR MEDIA CONVERTER

MODIFY CLOSED CIRCUIT TELEVISION CAMERA

ELECTRICAL DETAILS

NO SCALE

E-19

STATE OF CALIFORNIA - DEPARTMENT OF TRANSPORTATION
Caltrans® TRAFFIC ELECTRICAL

FUNCTIONAL SUPERVISOR: RAJPREET SINGH
CALCULATED-DESIGNED BY: LOUIE LA COMPTE
CHECKED BY: MERVIN FULLENWIDER
REVISED BY
DATE REVISED

LAST REVISION 10-09-15
DATE PLOTTED => 12-OCT-2015
TIME PLOTTED => 15:36

Dist	COUNTY	ROUTE	POST MILES TOTAL PROJECT	SHEET No.	TOTAL SHEETS
11	Imp, SD	5,7,8,15 52, etc	Var	33	59

REGISTERED ELECTRICAL ENGINEER — DATE: 10-02-15

10-12-15
PLANS APPROVAL DATE

REGISTERED PROFESSIONAL ENGINEER — MERVIN D. FULLENWIDER — No. E20211 — Exp. 3-31-17 — ELECTRICAL — STATE OF CALIFORNIA

THE STATE OF CALIFORNIA OR ITS OFFICERS OR AGENTS SHALL NOT BE RESPONSIBLE FOR THE ACCURACY OR COMPLETENESS OF SCANNED COPIES OF THIS PLAN SHEET.

NOTES:

1. TRACK FLUSH TO BRACKETS LOWER EDGE.
   THIS ASSURES PROPER DRAWER MOUNT CLEARANCE (BOTH SIDES)

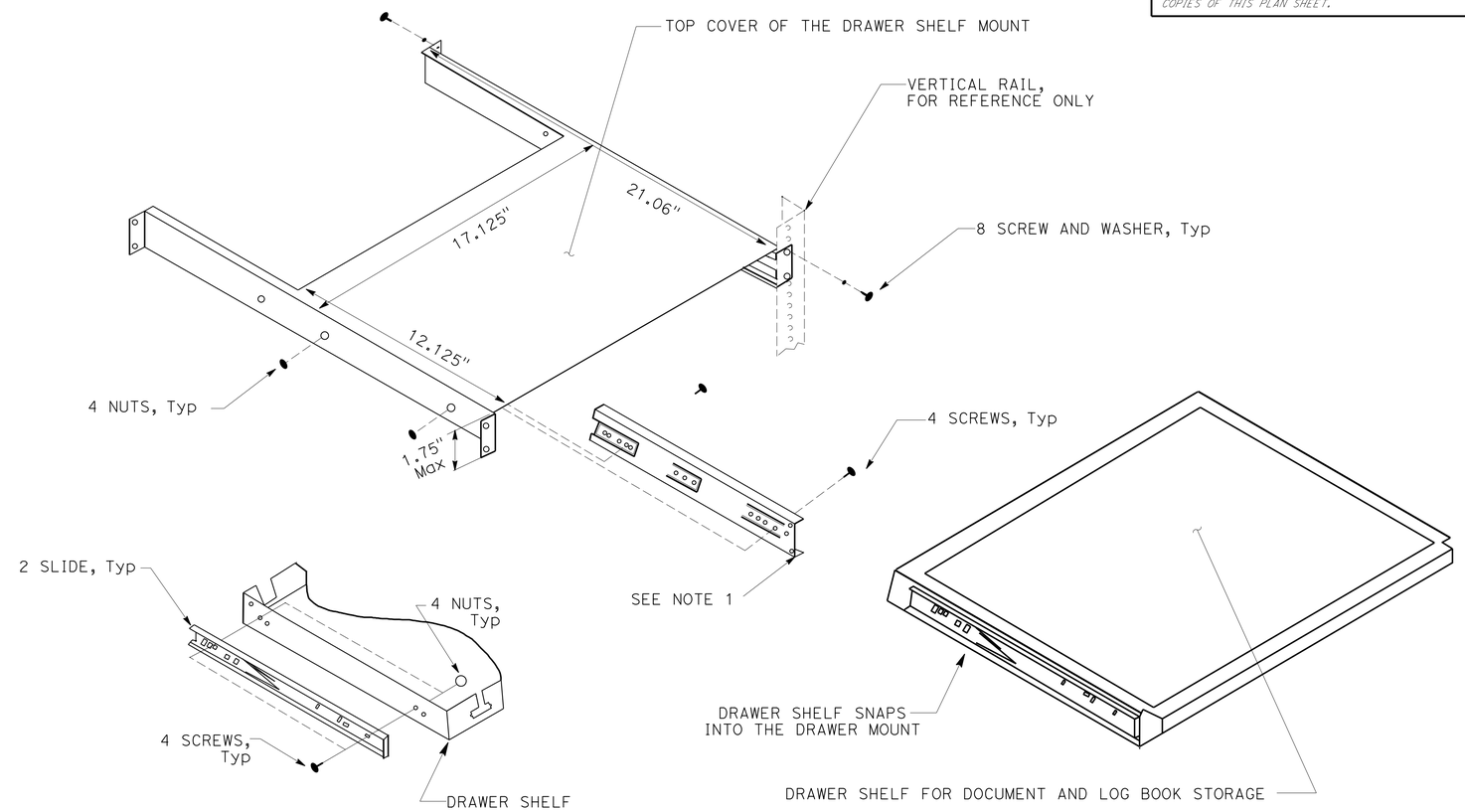

DRAWER SHELF

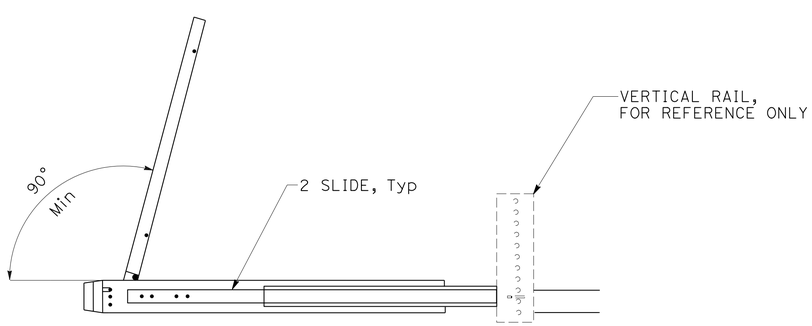

17" SCREEN MONITOR

MODIFY SIGNAL

ELECTRICAL DETAILS

NO SCALE

E-20

STATE OF CALIFORNIA - DEPARTMENT OF TRANSPORTATION
Caltrans® TRAFFIC ELECTRICAL

FUNCTIONAL SUPERVISOR: RAJPREET SINGH
CALCULATED-DESIGNED BY: LOUIE LA COMPTE
CHECKED BY: MERVIN FULLENWIDER
REVISED BY
DATE REVISED

LAST REVISION 10-09-15 | DATE PLOTTED => 12-OCT-2015 | TIME PLOTTED => 15:36

Dist	COUNTY	ROUTE	POST MILES TOTAL PROJECT	SHEET No.	TOTAL SHEETS
11	Imp, SD	5,7,8,15 52, etc	Var	34	59

REGISTERED ELECTRICAL ENGINEER — DATE: 10-02-15

10-12-15
PLANS APPROVAL DATE

REGISTERED PROFESSIONAL ENGINEER — MERVIN D. FULLENWIDER — No. E20211 — Exp. 3-31-17 — ELECTRICAL — STATE OF CALIFORNIA

THE STATE OF CALIFORNIA OR ITS OFFICERS OR AGENTS SHALL NOT BE RESPONSIBLE FOR THE ACCURACY OR COMPLETENESS OF SCANNED COPIES OF THIS PLAN SHEET.

SIGNAL CABINET
WITH FIELD MASTER
FRONT
(TYPE 332 CABINET)

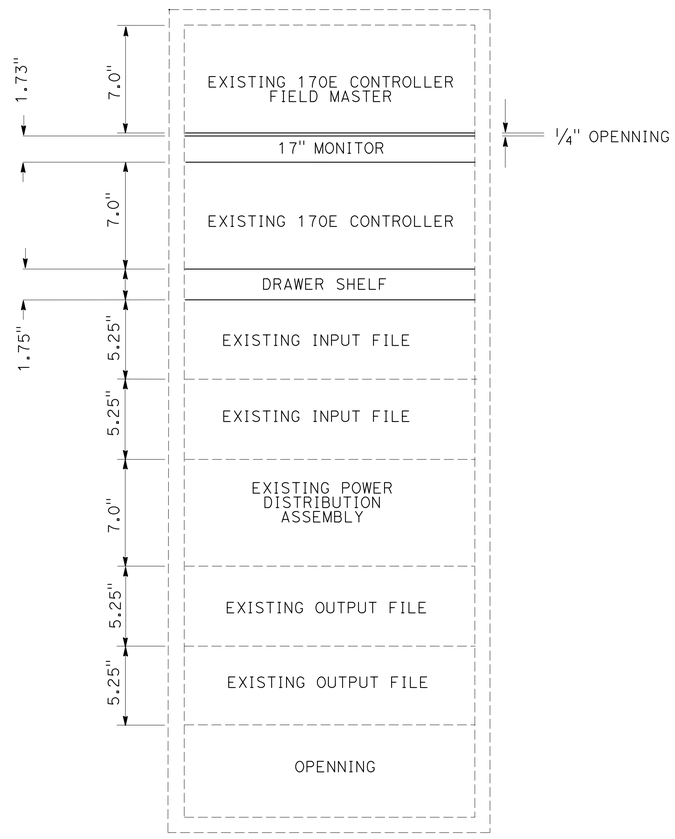

EXISTING TYPE 332 CABINET
(TYPICAL)
DETAIL 'A'

SIGNAL CABINET
FRONT
(TYPE 332 CABINET)

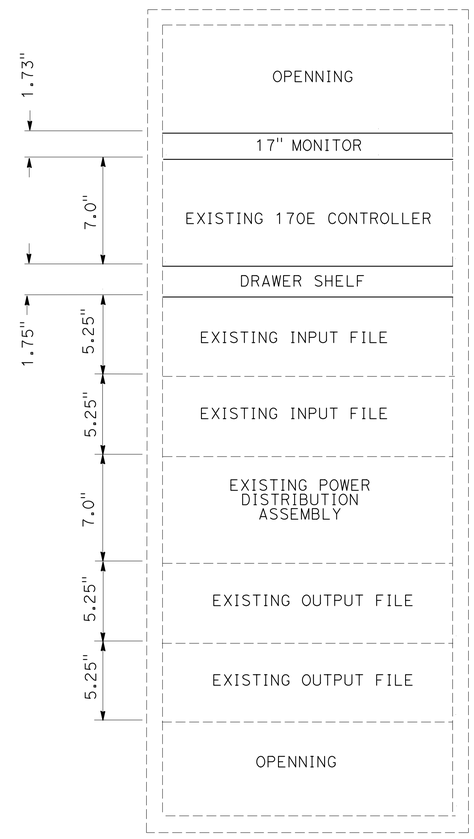

EXISTING TYPE 332 CABINET
(TYPICAL)
DETAIL 'B'

MODIFY SIGNAL

ELECTRICAL DETAILS

NO SCALE

E-21

STATE OF CALIFORNIA - DEPARTMENT OF TRANSPORTATION
Caltrans® TRAFFIC ELECTRICAL

FUNCTIONAL SUPERVISOR: RAJPREET SINGH
CALCULATED-DESIGNED BY: LOUIE LA COMPTE
CHECKED BY: MERVIN FULLENWIDER
REVISED BY
DATE REVISED

LAST REVISION 10-09-15 | DATE PLOTTED => 12-OCT-2015 | TIME PLOTTED => 15:36

Dist	COUNTY	ROUTE	POST MILES TOTAL PROJECT	SHEET No.	TOTAL SHEETS
11	Imp,SD	5,7,8,15, 52, etc.	Var	35	59

M Fullenwider 10-02-15
REGISTERED ELECTRICAL ENGINEER DATE

10-12-15
PLANS APPROVAL DATE

REGISTERED PROFESSIONAL ENGINEER
MERVIN D. FULLENWIDER
No. E20211
Exp. 3-31-17
ELECTRICAL
STATE OF CALIFORNIA

THE STATE OF CALIFORNIA OR ITS OFFICERS OR AGENTS SHALL NOT BE RESPONSIBLE FOR THE ACCURACY OR COMPLETENESS OF SCANNED COPIES OF THIS PLAN SHEET.

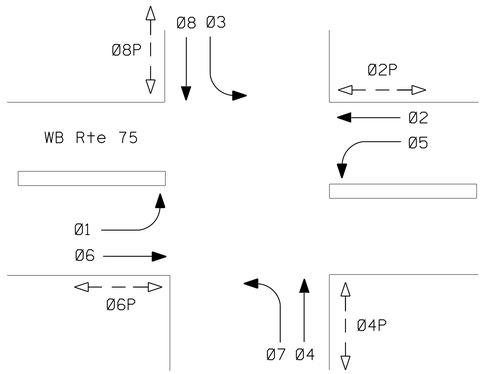

LOCATION OF CONSTRUCTION 41

(EXISTING PHASE DESIGNATION)

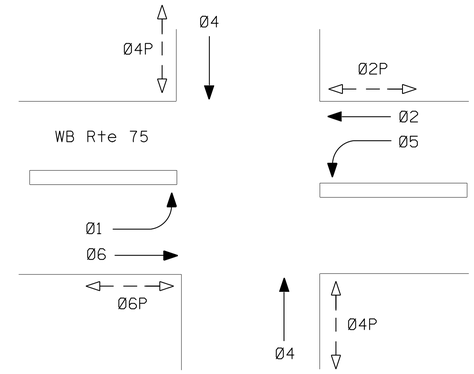

LOCATION OF CONSTRUCTION 42

(EXISTING PHASE DESIGNATION)

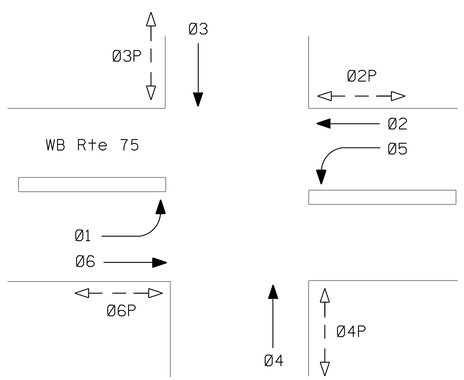

LOCATION OF CONSTRUCTION 43

(EXISTING PHASE DESIGNATION)

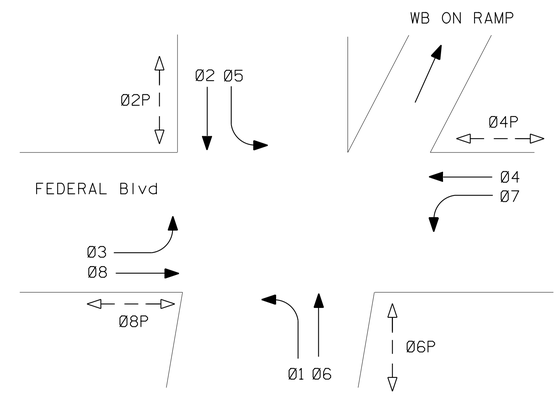

LOCATION OF CONSTRUCTION 44

(EXISTING PHASE DESIGNATION)

MODIFY SIGNAL

ELECTRICAL DETAILS

NO SCALE

E-22

REVISED BY	DATE REVISED

MERVIN FULLENWIDER — LOUIE LA COMPTE

CALCULATED-DESIGNED BY — CHECKED BY

FUNCTIONAL SUPERVISOR: RAJPREET SINGH

STATE OF CALIFORNIA - DEPARTMENT OF TRANSPORTATION

Caltrans® TRAFFIC ELECTRICAL

LAST REVISION 10-09-15 — DATE PLOTTED => 12-OCT-2015 — TIME PLOTTED => 15:36

Dist	COUNTY	ROUTE	POST MILES TOTAL PROJECT	SHEET No.	TOTAL SHEETS
11	Imp, SD	5,7,8,15 52, etc	Var	36	59

REGISTERED ELECTRICAL ENGINEER — DATE 10-02-15

PLANS APPROVAL DATE 10-12-15

REGISTERED PROFESSIONAL ENGINEER MERVIN D. FULLENWIDER No. E20211 Exp. 3-31-17 ELECTRICAL STATE OF CALIFORNIA

THE STATE OF CALIFORNIA OR ITS OFFICERS OR AGENTS SHALL NOT BE RESPONSIBLE FOR THE ACCURACY OR COMPLETENESS OF SCANNED COPIES OF THIS PLAN SHEET.

NOTE:

1. ITEMS SHOWN IN THIS TABLE ARE NOT A SEPARATE PAY ITEM, FOR INFORMATION ONLY.

MODIFY COMMUNICATION HUB

LOCATION OF CONSTRUCTION	COMMUNICATION HUB (No.)	UNINTERRUPTIBLE POWER SUPPLY	COMMUNICATION HUB SWITCH COMPONENTS				24-PORT SWITCH
			VS-S2T-10G (EA)	S2TISK9-15101SY (EA)	WS-X6848-TX-2T (EA)	WS-X6824-SFP-2T (EA)	
13	2	0	2	2	2	2	0
14	9	0	2	2	1	2	1
15	11	0	2	2	1	2	0
16	6	1	2	2	2	3	0
17	3	0	2	2	2	2	0
18	4	0	2	2	2	2	0
19	1	0	2	2	2	2	0
20	5	1	2	2	2	2	0
21	13	0	2	2	1	2	0

MODIFY COUNT STATION

LOCATION OF CONSTRUCTION	COUNT STATION (No.)	PULL BOX (EA)	ANTENNA (EA)	WIRELESS COMMUNICATION (EA)	AUTOMATIC TRAFFIC COUNTER (EA)	BATTERY (EA)	PIEZOELECTRIC SENSOR (EA)	PIEZOELECTRIC SENSOR CABLE (FT)	INDUCTIVE LOOP (EA)	INDUCTIVE LOOP CABLE (FT)	COUNT STATION CABINET (EA)	PIEZOELECTRIC SENSOR CONNECTOR BOX (EA)	POWER DISTRIBUTION UNIT (EA)	DETECTOR ISOLATION (EA)
1	717	2	0	0	1	1	8	320	4	160	0	1	0	0
2	814	0	0	0	1	1	0	0	0	0	0	0	0	0
3	821	2	0	0	1	1	4	710	2	495	0	1	1	0
4	972	0	0	0	1	1	0	0	0	0	0	0	0	0
5	730	0	0	0	1	1	0	0	0	0	0	0	1	1
6	734	0	1	0	1	1	0	0	0	0	0	0	0	0
7	759	0	1	1	1	1	0	0	0	0	0	0	0	1
8	754	0	1	1	1	1	0	0	0	0	0	0	0	1
9	968	2	1	0	1	1	4	160	2	80	0	1	0	0
10	831	1	0	0	1	1	4	120	2	60	1	1	0	0
11	719	0	1	1	1	1	4	140	2	70	1	1	0	0
12	402	0	1	0	1	1	8	850	4	425	1	1	0	0

MODIFY HIGHWAY ADVISORY RADIO SYSTEM

LOCATION OF CONSTRUCTION	DEPTH OF PILE	NUMBER OF PILES	PILE LENGTH	BAR REINFORCING STEEL	RECTANGULAR HSS STEEL POST	PHOTOVOLTAIC PANEL	ENCLOSURE	BATTERY CHARGER-REGULATOR	BATTERY	COMMUNICATION	CONTROLLER	POTOELECTRIC UNIT	FLASHING BEACON	HAR TRANSMITTER ANTENNA ACCESSORY
	LF	EA	LF	LB	LF	EA	EA	EA	EA	EA	EA	EA	EA	EA
22	8	2	16	154.66	52	1	1	1	1	1	1	1	2	0
24	8	2	16	154.66	52	1	1	1	1	1	1	1	2	0
25	8	2	16	154.66	44	1	1	1	1	1	1	1	2	0
26	8	2	16	154.66	52	1	1	1	1	1	1	1	2	0
27	8	2	16	154.66	52	1	1	1	1	1	1	1	2	0
28	8	2	16	154.66	52	1	1	1	1	1	1	1	2	0
29	8	2	16	154.66	52	1	1	1	1	1	1	1	2	0
30	8	2	16	154.66	52	1	1	1	1	1	1	1	2	0
31	8	2	16	154.66	52	1	1	1	1	1	1	1	2	0
32	8	2	16	154.66	52	1	1	1	1	1	1	1	2	0
33	0	0	0	0	0	0	0	0	0	0	0	0	0	1
34	8	2	16	154.66	52	1	1	1	1	1	1	1	2	0
35	8	2	16	154.66	52	1	1	1	1	1	1	1	2	0
36	8	2	16	154.66	52	1	1	1	1	1	1	1	2	0
37	8	2	16	154.66	44	1	1	1	1	1	1	1	2	0

ELECTRICAL QUANTITIES
E-23

REVISED BY | DATE REVISED

LOUIE LA COMPTE | MERVIN FULLENWIDER

CALCULATED-DESIGNED BY | CHECKED BY

FUNCTIONAL SUPERVISOR | RAJPREET SINGH

STATE OF CALIFORNIA - DEPARTMENT OF TRANSPORTATION

Caltrans® TRAFFIC ELECTRICAL

LAST REVISION 10-09-15 | DATE PLOTTED => 12-OCT-2015 | TIME PLOTTED => 15:36

Dist	COUNTY	ROUTE	POST MILES TOTAL PROJECT	SHEET No.	TOTAL SHEETS
11	Imp, SD	5,7,8,15 52, etc	Var	37	59

REGISTERED ELECTRICAL ENGINEER — DATE: 10-02-15

PLANS APPROVAL DATE: 10-12-15

REGISTERED PROFESSIONAL ENGINEER — MERVIN D. FULLENWIDER No. E20211 Exp. 3-31-17 ELECTRICAL — STATE OF CALIFORNIA

THE STATE OF CALIFORNIA OR ITS OFFICERS OR AGENTS SHALL NOT BE RESPONSIBLE FOR THE ACCURACY OR COMPLETENESS OF SCANNED COPIES OF THIS PLAN SHEET.

NOTE:

1. ITEMS SHOWN IN THIS TABLE ARE NOT A SEPARATE PAY ITEM, FOR INFORMATION ONLY.

MODIFY SIGNAL

LOCATION OF CONSTRUCTION	INTERSECTION	SIGNAL HEAD					DRAWER SHELF (EA)	RACK MOUNT MONITOR (EA)	INFRARED DETECTION CAMERA (EA)	VIDEO DETECTION PROCESSOR (EA)
		TV-1-T (EA)	TV-2-T (EA)	LT-2-T (EA)	SV-1 (EA)	SV-2-T (EA)				
41	Rte 75 AT SATURN Ave	1	1	1	0	0	0	0	0	0
42	Rte 75 AT 16TH STREET	0	0	0	2	0	0	0	0	0
43	Rte 75 AT 13TH STREET	0	0	0	2	0	0	0	0	0
44	Rte 94 EB AT HOME Ave AND FEDERAL	2	2	0	0	0	0	0	0	0
45	Imp Rte 7 AT MENVIELLE Rd	0	0	0	0	0	1	0	0	0
46	Imp Rte 8 EB AT 4TH SREET	0	0	0	0	0	1	0	0	0
47	Imp OLD 111 AT DEL RIO PLACE AND WB 78	0	0	0	0	0	1	0	0	0
48	Imp OLD 111 AT SHANK Rd AND EB 78	0	0	0	0	0	0	0	3	0
49	Imp Rte 78 AT Rte 111	0	0	0	0	0	1	0	0	0
50	Imp Rte 86 AT WAKE Ave	0	0	0	0	0	1	1	0	0
51	Imp Rte 86 AT PICO AVENUE	0	0	0	0	0	0	1	0	0
52	Imp Rte 86 AT 15TH STREET	0	0	0	0	0	0	1	0	0
53	Imp Rte 86 AT KEYSTONE ROAD	0	0	0	0	0	1	0	0	0
54	Imp Rte 86 AT WILDCAT Dr	0	0	0	0	0	1	0	0	0
55	Imp Rte 86 AT MALAN STREET	0	0	0	0	0	1	0	0	0
56	Imp Rte 86 AT K STREET	0	0	0	0	0	0	1	3	0
57	Imp Rte 86 AT RIO VISTA Rd	0	0	0	0	0	0	1	0	0
58	Imp Rte 86 AT WESTERN Ave	0	0	0	0	0	0	1	0	1
59	Imp Rte 98 AT EAST RIVERA Dr	0	0	0	0	0	0	1	0	0
60	Imp Rte 98 AT COLE ROAD	0	0	0	0	0	0	1	0	0
61	Imp Rte 111 AT JASPER Rd	0	0	0	0	0	1	0	0	0
62	Imp Rte 111 AT ROSS Rd	0	0	0	0	0	1	0	0	0
63	Imp Rte 111 AT EVAN HEWES Hwy	0	0	0	0	0	1	1	0	0
64	Imp Rte 111 AT ATEN Rd	0	0	0	0	0	1	0	0	0
65	Imp Rte 111 AT KEYSTONE Rd	0	0	0	0	0	1	0	0	0

ELECTRICAL QUANTITIES

E-24

REVISED BY | DATE REVISED

MERVIN FULLENWIDER | LOUIE LA COMPTE

CALCULATED-DESIGNED BY | CHECKED BY

FUNCTIONAL SUPERVISOR: RAJPREET SINGH

STATE OF CALIFORNIA - DEPARTMENT OF TRANSPORTATION

Caltrans® TRAFFIC ELECTRICAL

LAST REVISION 10-09-15 | DATE PLOTTED => 12-OCT-2015 | TIME PLOTTED => 15:36

Dist	COUNTY	ROUTE	POST MILES TOTAL PROJECT	SHEET No.	TOTAL SHEETS
11	Imp, SD	5,7,8,15 52, etc	Var	38	59

REGISTERED ELECTRICAL ENGINEER — DATE 10-02-15

PLANS APPROVAL DATE 10-12-15

REGISTERED PROFESSIONAL ENGINEER MERVIN D. FULLENWIDER No. E20211 Exp. 3-31-17 ELECTRICAL STATE OF CALIFORNIA

THE STATE OF CALIFORNIA OR ITS OFFICERS OR AGENTS SHALL NOT BE RESPONSIBLE FOR THE ACCURACY OR COMPLETENESS OF SCANNED COPIES OF THIS PLAN SHEET.

NOTE:

1. ITEMS SHOWN IN THIS TABLE ARE NOT A SEPARATE PAY ITEM, FOR INFORMATION ONLY.

MODIFY PHOTOVOLTAIC SYSTEM

LOCATION	PHOTOVOLTAIC PANEL (EA)	BATTERY BANK (AMPERE-HOUR)	NEMA 3R ENCLOSURE (EA)	VDS 40 POLE (EA)	CONDUIT 2" (FT)	#8 CONDUCTORS (FT)	BATTERY CHARGER-CONTROLLER (EA)	FAN (EA)	THERMOSTAT (EA)
38	2	2000	1	1	15	110	1	1	1

MODIFY CLOSED CIRCUIT TELEVISION CAMERA

LOCATION	FIBER DISTRIBUTION UNIT (EA)	SWITCH (EA)	CAMERA (EA)	CAMERA MOUNTING ADAPTER (EA)	ETHERNET CABLE (FT)	POWER OVER ETHERNET (EA)	DRAWER SHELF (EA)
23	0	0	1	1	75	1	1
39	1	0	1	1	75	1	1
40	0	1	1	1	75	1	1

MODIFY AIR CONDITIONING

LOCATION	COMMUNICATION HUB (No.)	AIR CONDITIONING PART NUMBER		
		W12AA05XX4 (EA)	220V175 (EA)	2701710 (EA)
16	6	2	4	4
17	3	2	4	4
18	4	2	4	4
20	5	2	4	4

ELECTRICAL QUANTITIES

E-25

STATE OF CALIFORNIA - DEPARTMENT OF TRANSPORTATION
Caltrans® TRAFFIC ELECTRICAL

FUNCTIONAL SUPERVISOR: RAJPREET SINGH
CALCULATED-DESIGNED BY: LOUIE LA COMPTE
CHECKED BY: MERVIN FULLENWIDER
REVISED BY / DATE REVISED

LAST REVISION 10-09-15 | DATE PLOTTED => 12-OCT-2015 | TIME PLOTTED => 15:36

M

Maint	MAINTENANCE
Max	MAXIMUM
MB	METAL BEAM
MBB	METAL BEAM BARRIER
MBGR	METAL BEAM GUARD RAILING
Med	MEDIAN
MGS	MIDWEST GUARDRAIL SYSTEM
MH	MANHOLE
Min	MINIMUM
Misc	MISCELLANEOUS
Misc I & S	MISCELLANEOUS IRON AND STEEL
Mkr	MARKER
Mod	MODIFIED,
	MODIFY
Mon	MONUMENT
MP	METAL PLATE
MPGR	METAL PLATE GUARD RAILING
MR	MOVEMENT RATING
MSE	MECHANICALLY STABILIZED EMBANKMENT
Mt	MOUNTAIN, MOUNT
Mtl	MATERIAL
MVP	MAINTENANCE VEHICLE PULLOUT

N

N	NORTH
NB	NORTHBOUND
No.	NUMBER (MUST HAVE PERIOD)
Nos.	NUMBERS (MUST HAVE PERIOD)
NPS	NOMINAL PIPE SIZE
NS	NEAR SIDE
NSP	NEW STANDARD PLAN
NTS	NOT TO SCALE

O

Oblr	OBLITERATE
OC	OVERCROSSING
OD	OUTSIDE DIAMETER
OF	OUTSIDE FACE
OG	ORIGINAL GROUND
OGAC	OPEN GRADED ASPHALT CONCRETE
OGFC	OPEN GRADED FRICTION COURSE
OH	OVERHEAD
OHWM	ORDINARY HIGH WATER MARK
O-O	OUT TO OUT
Opp	OPPOSITE
OSD	OVERSIDE DRAIN

P

P	PAGE
PAP	PERFORATED ALUMINUM PIPE
PB	PULL BOX
PC	POINT OF CURVATURE,
	PRECAST
PCC	POINT OF COMPOUND CURVE,
	PORTLAND CEMENT CONCRETE
PCMS	PORTABLE CHANGEABLE MESSAGE SIGN
PCP	PERFORATED CONCRETE PIPE,
	PRESTRESSED CONCRETE PIPE
PCVC	POINT OF COMPOUND VERTICAL CURVE
PEC	PERMIT TO ENTER AND CONSTRUCT
Ped	PEDESTRIAN
Ped OC	PEDESTRIAN OVERCROSSING
Ped UC	PEDESTRIAN UNDERCROSSING
Perm Mtl	PERMEABLE MATERIAL

P continued

PG	PROFILE GRADE
PI	POINT OF INTERSECTION
PJP	PARTIAL JOINT PENETRATION
Pkwy	PARKWAY
₱,PL	PLATE
P/L	PROPERTY LINE
PM	POST MILE,
	TIME FROM NOON TO MIDNIGHT
PN	PAVING NOTCH
POC	POINT OF HORIZONTAL CURVE
POT	POINT OF TANGENT
POVC	POINT OF VERTICAL CURVE
PP	PIPE PILE,
	PLASTIC PIPE,
	POWER POLE
PPL	PREFORMED PERMEABLE LINER
PPP	PERFORATED PLASTIC PIPE
PRC	POINT OF REVERSE CURVE
PRF	PAVEMENT REINFORCING FABRIC
PRVC	POINT OF REVERSE VERTICAL CURVE
PS&E	PLANS, SPECIFICATIONS AND ESTIMATES
PS, P/S	PRESTRESSED
PSP	PERFORATED STEEL PIPE
PT	POINT OF TANGENCY
PVC	POLYVINYL CHLORIDE
Pvmt	PAVEMENT

Q

Qty	QUANTITY

R

R	RADIUS
R & D	REMOVE AND DISPOSE
R & S	REMOVE AND SALVAGE
R/C	RATE OF CHANGE
RCA	REINFORCED CONCRETE ARCH
RCB	REINFORCED CONCRETE BOX
RCP	REINFORCED CONCRETE PIPE
RCPA	REINFORCED CONCRETE PIPE ARCH
Rd	ROAD
Reinf	REINFORCED,
	REINFORCEMENT,
	REINFORCING
Rel	RELOCATE
Repl	REPLACEMENT
Ret	RETAINING
Rev	REVISED, REVISION
Rdwy	ROADWAY
RHMA	RUBBERIZED HOT MIX ASPHALT
Riv	RIVER
RM	ROAD-MIXED
RP	RADIUS POINT,
	REFERENCE POINT
RR	RAILROAD
RSP	ROCK SLOPE PROTECTION,
	REVISED STANDARD PLAN
Rt	RIGHT
Rte	ROUTE
RW	REDWOOD,
	RETAINING WALL
R/W	RIGHT OF WAY
Rwy	RAILWAY

S

S	SOUTH,
	SUPPLEMENT
SAE	STRUCTURE APPROACH EMBANKMENT
Salv	SALVAGE
SAPP	STRUCTURAL ALUMINUM PLATE PIPE
SB	SOUTHBOUND
SC	SAND CUSHION
SCSP	SLOTTED CORRUGATED STEEL PIPE
SD	STORM DRAIN
Sec	SECOND,
	SECTION
Sep	SEPARATION
SG	SUBGRADE
Shld	SHOULDER
Sht	SHEET
Sim	SIMILAR
℄	STATION LINE
SM	SELECTED MATERIAL
Spec	SPECIAL,
	SPECIFICATIONS
SPP	SLOTTED PLASTIC PIPE
SS	SLOPE STAKE
SSBM	STRAP AND SADDLE BRACKET METHOD
SSD	STRUCTURAL SECTION DRAIN
SSPA	STRUCTURAL STEEL PLATE ARCH
SSPP	STRUCTURAL STEEL PLATE PIPE
SSPPA	STRUCTURAL STEEL PLATE PIPE ARCH
SSRP	STEEL SPIRAL RIB PIPE
St	STREET
Sta	STATION
STBB	SINGLE THRIE BEAM BARRIER
Std	STANDARD
Str	STRUCTURE
Surf	SURFACING
SW	SIDEWALK,
	SOUND WALL
Swr	SEWER
Sym	SYMMETRICAL
S4S	SURFACE 4 SIDES

T

T	SEMI-TANGENT
Tan	TANGENT
TBB	THRIE BEAM BARRIER
Tbr	TIMBER
TC	TOP OF CURB
TCB	TRAFFIC CONTROL BOX
TCE	TEMPORARY CONSTRUCTION EASEMENT
Tel	TELEPHONE
Temp	TEMPORARY
TG	TOP OF GRADE
Tot	TOTAL
TP	TELEPHONE POLE
TPB	TREATED PERMEABLE BASE
TPM	TREATED PERMEABLE MATERIAL
Trans	TRANSITION

T continued

TS	TRANSVERSE,
	TRAFFIC SIGNAL,
	TUBULAR STEEL
Typ	TYPICAL

U

UC	UNDERCROSSING
UD	UNDERDRAIN
UG	UNDERGROUND
UON	UNLESS OTHERWISE NOTED
UP	UNDERPASS

V

V	VALVE,
	DESIGN SPEED
Var	VARIABLE,
	VARIES
VC	VERTICAL CURVE
VCP	VITRIFIED CLAY PIPE
Vert	VERTICAL
Via	VIADUCT
Vol	VOLUME

W

W	WEST,
	WIDTH
WB	WESTBOUND
WH	WEEP HOLE
WM	WIRE MESH
WS	WATER SURFACE
WSP	WELDED STEEL PIPE
Wt	WEIGHT
WV	WATER VALVE
WW	WINGWALL
WWLOL	WINGWALL LAYOUT LINE

X

X Sec	CROSS SECTION
Xing	CROSSING

Y

Yr	YEAR
Yrs	YEARS

Dist	COUNTY	ROUTE	POST MILES TOTAL PROJECT	SHEET No.	TOTAL SHEETS
11	Imp, SD	5,7,8,15, 52,etc.	Var	39	59

Grace M. Tsushima
REGISTERED CIVIL ENGINEER

July 19, 2013
PLANS APPROVAL DATE

REGISTERED PROFESSIONAL ENGINEER
Grace M. Tsushima
No. C49814
Exp. 9-30-14
CIVIL
STATE OF CALIFORNIA

THE STATE OF CALIFORNIA OR ITS OFFICERS OR AGENTS SHALL NOT BE RESPONSIBLE FOR THE ACCURACY OR COMPLETENESS OF SCANNED COPIES OF THIS PLAN SHEET.

TO ACCOMPANY PLANS DATED 10-12-15

UNIT OF MEASUREMENT SYMBOLS:

Some of the symbols used in the project plan quantity tables and in the Bid Item List are:

TABLE A

SYMBOL USED	DEFINITIONS
ACRE	ACRE
CF	CUBIC FOOT
CY	CUBIC YARD
EA	EACH
GAL	GALLON
LB	POUND
LF	LINEAR FOOT
SQFT	SQUARE FOOT
SQYD	SQUARE YARD
STA	100 FEET
TAB	TABLET
TON	2,000 POUNDS

Some of the symbols used in the plans other than in the project plan quantity tables are:

TABLE B

SYMBOL USED	DEFINITIONS
ksi	KIPS PER SQUARE INCH
ksf	KIPS PER SQUARE FOOT
psi	POUNDS PER SQUARE INCH
psf	POUNDS PER SQUARE FOOT
lb/ft^3, pcf	POUNDS PER CUBIC FOOT
tsf	TONS PER SQUARE FOOT
mph, MPH *	MILES PER HOUR
ø	NOMINAL DIAMETER
oz	OUNCE
lb	POUND
kip	1,000 POUNDS
cal	CALORIE
ft	FOOT OR FEET
gal	GALLON

* For use on a sign panel only

STATE OF CALIFORNIA
DEPARTMENT OF TRANSPORTATION

ABBREVIATIONS (SHEET 2 OF 2)

NO SCALE

RSP A10B DATED JULY 19, 2013 SUPERSEDES STANDARD PLAN A10B DATED MAY 20, 2011 - PAGE 2 OF THE STANDARD PLANS BOOK DATED 2010.

REVISED STANDARD PLAN RSP A10B

2010 REVISED STANDARD PLAN RSP A10B

6-7-13

Dist	COUNTY	ROUTE	POST MILES TOTAL PROJECT	SHEET No.	TOTAL SHEETS
11	Imp, SD	5,7,8,15, 52,etc.	Var	40	59

REGISTERED CIVIL ENGINEER

July 19, 2013
PLANS APPROVAL DATE

REGISTERED PROFESSIONAL ENGINEER
Gurinderpal Bhullar
No. C48815
Exp. 9-30-14
CIVIL
STATE OF CALIFORNIA

THE STATE OF CALIFORNIA OR ITS OFFICERS OR AGENTS SHALL NOT BE RESPONSIBLE FOR THE ACCURACY OR COMPLETENESS OF SCANNED COPIES OF THIS PLAN SHEET.

TO ACCOMPANY PLANS DATED 10-12-15

2010 REVISED STANDARD PLAN RSP T9

TABLE 1

TAPER LENGTH CRITERIA AND CHANNELIZING DEVICE SPACING

SPEED (S)	MINIMUM TAPER LENGTH * FOR WIDTH OF OFFSET 12 FEET (W)				MAXIMUM CHANNELIZING DEVICE SPACING		
					X	Y	Z **
	TANGENT 2L	MERGING L	SHIFTING L/2	SHOULDER L/3	TAPER	TANGENT	CONFLICT
mph	ft	ft	ft	ft	ft	ft	ft
20	160	80	40	27	20	40	10
25	250	125	63	42	25	50	12
30	360	180	90	60	30	60	15
35	490	245	123	82	35	70	17
40	640	320	160	107	40	80	20
45	1080	540	270	180	45	90	22
50	1200	600	300	200	50	100	25
55	1320	660	330	220	55	110	27
60	1440	720	360	240	60	120	30
65	1560	780	390	260	65	130	32
70	1680	840	420	280	70	140	35

* - For other offsets, use the following merging taper length formula for L:
For speed of 40 mph or less, $L = WS^2/60$
For speed of 45 mph or more, $L = WS$

Where: L = Taper length in feet
W = Width of offset in feet
S = Posted speed limit, off-peak 85th-percentile speed prior to work starting, or the anticipated operating speed in mph

** - Use for taper and tangent sections where there are no pavement markings or where there is a conflict between existing pavement markings and channelizers (CA).

TABLE 2

LONGITUDINAL BUFFER SPACE AND FLAGGER STATION SPACING

SPEED *	Min D **	DOWNGRADE Min D ***		
		-3%	-6%	-9%
mph	ft	ft	ft	ft
20	115	116	120	126
25	155	158	165	173
30	200	205	215	227
35	250	257	271	287
40	305	315	333	354
45	360	378	400	427
50	425	446	474	507
55	495	520	553	593
60	570	598	638	686
65	645	682	728	785
70	730	771	825	891

* - Speed is posted speed limit, off-peak 85th-percentile speed prior to work starting, or the anticipated operating speed in mph

** - Longitudinal buffer space or flagger station spacing

*** - Use on sustained downgrade steeper than -3 percent and longer than 1 mile.

TABLE 3

ADVANCE WARNING SIGN SPACING

ROAD TYPE	DISTANCE BETWEEN SIGNS *		
	A	B	C
	ft	ft	ft
URBAN - 25 mph OR LESS	100	100	100
URBAN - MORE THAN 25 mph TO 40 mph	250	250	250
URBAN - MORE THAN 40 mph	350	350	350
RURAL	500	500	500
EXPRESSWAY / FREEWAY	1000	1500	2640

* - The distances are approximate, are intended for guidance purposes only, and should be applied with engineering judgment. These distances should be adjusted by the Engineer for field conditions, if necessary, by increasing or decreasing the recommmended distances.

STATE OF CALIFORNIA
DEPARTMENT OF TRANSPORTATION

TRAFFIC CONTROL SYSTEM TABLES FOR LANE AND RAMP CLOSURES

NO SCALE

RSP T9 DATED JULY 19, 2013 SUPERSEDES RSP T9 DATED APRIL 19, 2013 THAT SUPPLEMENTS THE STANDARD PLANS BOOK DATED 2010.

REVISED STANDARD PLAN RSP T9

Dist	COUNTY	ROUTE	POST MILES TOTAL PROJECT	SHEET No.	TOTAL SHEETS
11	Imp, SD	5,7,8,15, 52,etc.	Var	41	59

REGISTERED CIVIL ENGINEER

April 19, 2013
PLANS APPROVAL DATE

REGISTERED PROFESSIONAL ENGINEER Gurinderpal Bhullar No. C48815 Exp. 9-30-14 CIVIL STATE OF CALIFORNIA

THE STATE OF CALIFORNIA OR ITS OFFICERS OR AGENTS SHALL NOT BE RESPONSIBLE FOR THE ACCURACY OR COMPLETENESS OF SCANNED COPIES OF THIS PLAN SHEET.

TO ACCOMPANY PLANS DATED 10-12-15

NOTES:

See Revised Standard Plan RSP T9 for tables.

Use cone spacing X for taper segment, Y for tangent segment or Z for conflict situations, as approriate, per Table 1, unless X, Y, or Z cone spacing is shown on this sheet.

Unless otherwise specified in the special provisions, all temporary warning signs shall have black legend on fluorescent orange background.

California codes are designated by (CA). Otherwise, Federal (MUTCD) codes are shown.

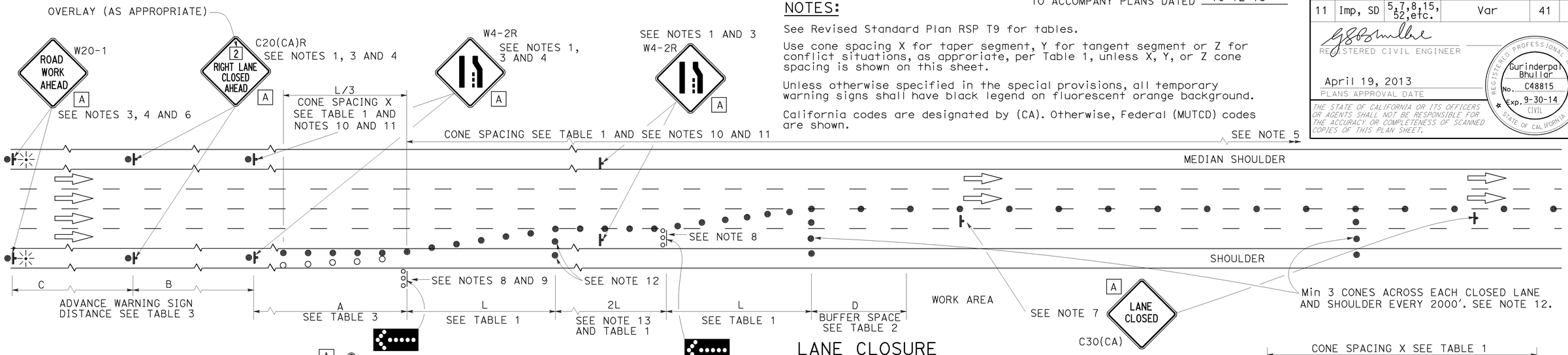

LANE CLOSURE

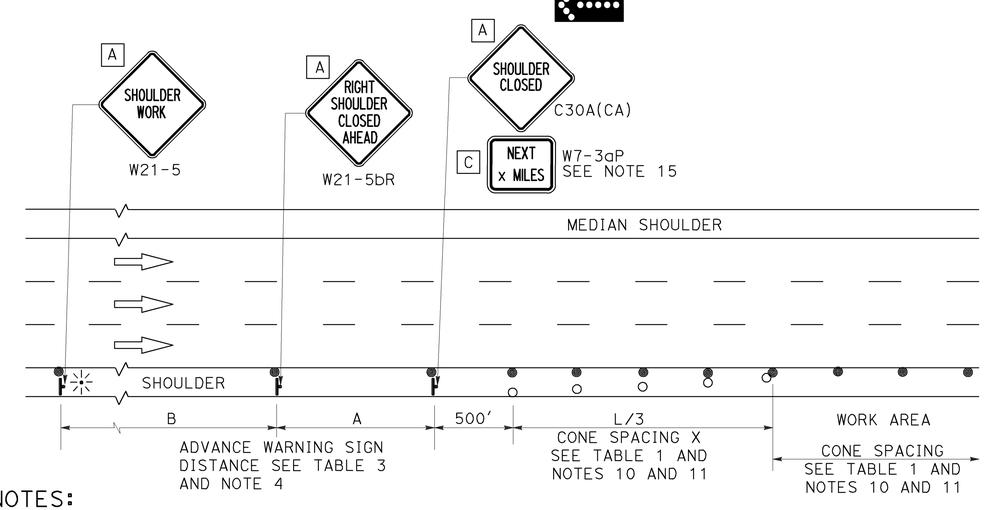

SHOULDER CLOSURE

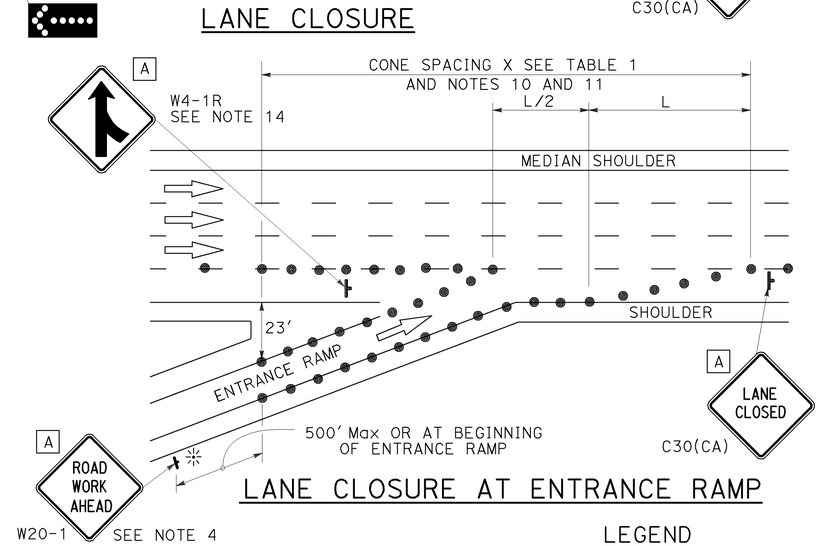

LANE CLOSURE AT ENTRANCE RAMP

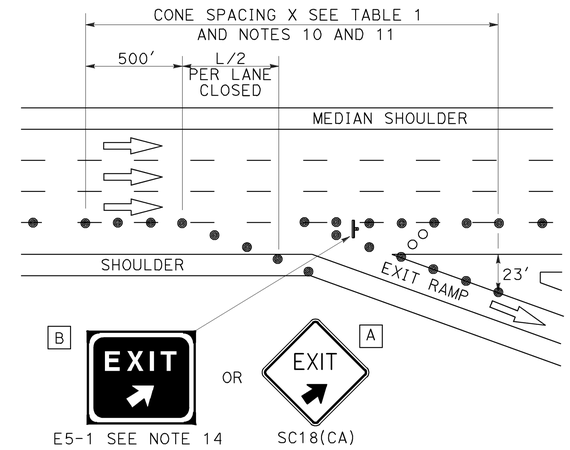

LANE CLOSURE AT EXIT RAMP

NOTES:

1. Median lane closures shall conform to the details as shown except that C20(CA)L and W4-2L signs shall be used.
2. At least one person shall be assigned to provide full time maintenance of traffic control devices for lane closures.
3. Duplicate sign installations are not required:
   a) On opposite shoulder if at least one-half of the available lanes remain open to traffic.
   b) In the median if the width of the median shoulder is less than 8' and the outside lanes are to be closed.
4. Each advance warning sign on each side of the roadway shall be equipped with at least two flags for daytime closure. Each flag shall be at least 16" x 16" in size and shall be orange or fluorescent red-orange in color. Flashing beacons shall be placed at the locations indicated for lane closure during hours of darkness.
5. A G20-2 "END ROAD WORK" sign, with minimum size of 48" x 24" as appropriate, shall be placed at the end of the lane closure unless the end of work area is obvious or ends within a larger project's limits.
6. If the W20-1 sign would follow within 2000' of a stationary W20-1 or G20-1 "ROAD WORK NEXT _____ MILES", use a C20(CA) sign for the first advance warning sign.
7. Place a C30(CA) sign every 2000' throughout length of lane closure.
8. One flashing arrow sign for each lane closed. The flashing arrow signs shall be Type I.
9. A minimum 1500' of sight distance shall be provided where possible for vehicles approaching the first flashing arrow sign. Lane closures shall not begin at top of crest vertical curve or on a horizontal curve.
10. All cones used for lane closures during the hours of darkness shall be fitted with retroreflective bands (or sleeves) as specified in the specifications.
11. Portable delineators, placed at one-half the spacing indicated for traffic cones may be used instead of cones for daytime closures only.
12. Unless otherwise specified in the special provisions, a minimum of 3 cones shall be placed transversely across each closed lane and shoulder at each location where a taper across a traffic lane ends and every 2000' as shown on the "Lane Closure" detail. Two Type II barricades may be used instead of the 3 cones. The transverse alignment of the cones or barricades on the closed shoulder may be shifted from the transverse alignment to provide access to the work.
13. Unless otherwise specified in the special provisions, the 2L tangent shown along lane lines shall be used between the L tapers required for each closed traffic lane.
14. Unless otherwise specified in the special provisions, the E5-1 or SC18(CA) and W4-1 signs shall be used as shown.
15. A W7-3aP "NEXT____ MILES" plaque must be used if theshoulder closure extends beyond the distance that can be perceived by road users.

LEGEND

- TRAFFIC CONE
- TRAFFIC CONE (OPTIONAL TAPER)
- TEMPORARY TRAFFIC CONTROL SIGN
- FLASHING ARROW SIGN (FAS)
- FAS SUPPORT OR TRAILER
- PORTABLE FLASHING BEACON

SIGN PANEL SIZE (Min)

A	48" x 48"
B	72" x 60"
C	36" x 30"

STATE OF CALIFORNIA
DEPARTMENT OF TRANSPORTATION

TRAFFIC CONTROL SYSTEM FOR LANE CLOSURE ON FREEWAYS AND EXPRESSWAYS

NO SCALE

RSP T10 DATED APRIL 19, 2013 SUPERSEDES STANDARD PLAN T10 DATED MAY 20, 2011 - PAGE 237 OF THE STANDARD PLANS BOOK DATED 2010.

REVISED STANDARD PLAN RSP T10

2010 REVISED STANDARD PLAN RSP T10

12-18-12

TO ACCOMPANY PLANS DATED 10-12-15

Dist	COUNTY	ROUTE	POST MILES TOTAL PROJECT	SHEET No.	TOTAL SHEETS
11	Imp, SD	5,7,8,15, 52,etc.	Var	42	59

REGISTERED CIVIL ENGINEER

April 19, 2013
PLANS APPROVAL DATE

REGISTERED PROFESSIONAL ENGINEER Gurinderpal Bhullar No. C48815 Exp. 9-30-14 CIVIL STATE OF CALIFORNIA

THE STATE OF CALIFORNIA OR ITS OFFICERS OR AGENTS SHALL NOT BE RESPONSIBLE FOR THE ACCURACY OR COMPLETENESS OF SCANNED COPIES OF THIS PLAN SHEET.

NOTES: See Revised Standard Plan RSP T9 for tables.

Use cone spacing X for taper segment, Y for tangent segment or Z for conflict situations, as approriate, per Table 1, unless X, Y, or Z cone spacing is shown on this sheet.

Unless otherwise specified in the special provisions, all temporary warning signs shall have black legend on fluorescent orange background.

California codes are designated by (CA). Otherwise, Federal (MUTCD) codes are shown.

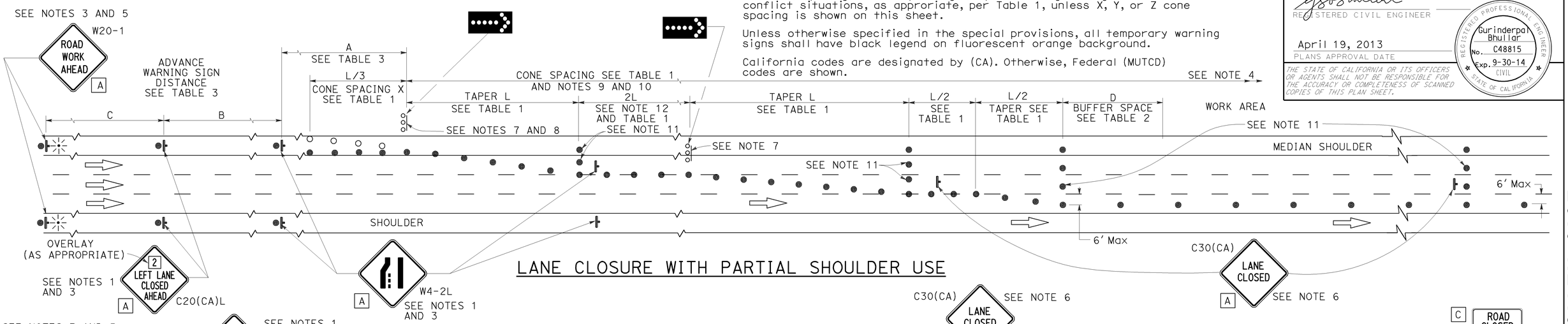

LANE CLOSURE WITH PARTIAL SHOULDER USE

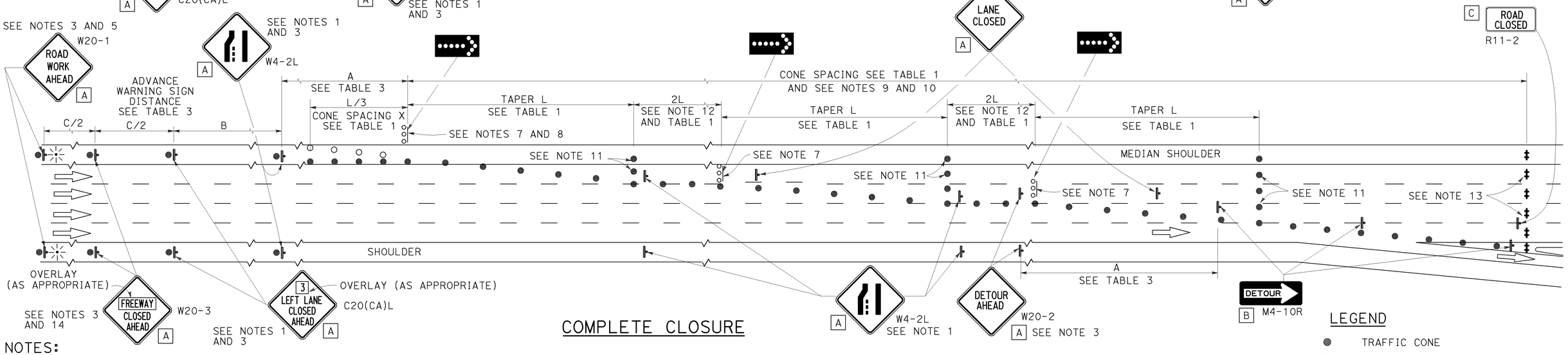

COMPLETE CLOSURE

NOTES:

1. Lane closures on the right side using partial median shoulder as a traffic lane shall conform to the details as shown except that C20(CA)R and W4-2R signs shall be used.
2. At least one person shall be assigned to provide full time maintenance of traffic control devices for lane closures.
3. Each advance warning sign on each side of the roadway shall be equipped with at least two flags for daytime closure. Each flag shall be at least 16" X 16" in size and shall be orange or fluorescent red-orange in color. Flashing beacons shall be placed at the locations indicated for lane closure during hours of darkness.
4. A G20-2 "END ROAD WORK" sign, with minimum size of 48" x 24" as appropriate, shall be placed at the end of the lane closure unless the end of work area is obvious or ends within a larger project's limits.
5. If the W20-1 sign would follow within 2000' of a stationary W20-1 or G20-1 "ROAD WORK NEXT ___ MILES", use a C20(CA) sign for the first advance warning sign.
6. Place a C30(CA) sign every 2000' throughout length of lane closure.
7. One flashing arrow sign for each lane closed. The flashing arrow signs shall be Type I.
8. A minimum 1500' of sight distance shall be provided where possible for vehicles approaching the first flashing arrow sign. Lane closures shall not begin at the top of crest vertical curve or on a horizontal curve.
9. All cones used for lane closures during the hours of darkness shall be fitted with retroreflective bands (or sleeves) as specified in the specifications.
10. Portable delineators, placed at one-half the spacing indicated for traffic cones, may be used instead of cones for daytime closures only.
11. Unless otherwise specified in the special provisions, a minimum of 3 cones shall be placed transversely across each closed lane and shoulder at each location where a taper across a traffic lane ends and every 2000' as shown on the "Lane Closure With Partial Shoulder Use" detail. Two Type II barricades may be used instead of the 3 cones. The transverse alignment of the cones or barricades on the closed shoulder may be shifted from the transverse alignment to provide access to the work.
12. Unless otherwise specified in the special provisions, the 2L tangent shown along lane lines shall be used between the L tapers required for each closed traffic lane.
13. A minimum of Two Type II or III barricades shall be placed across each closed lane and shoulder at the location shown and every 2000' within the complete closure area. Within the complete closure area, the transverse alignment of the barricades on the closed shoulder may be shifted from the transverse alignment to provide access to the work.
14. When specified in the special provisions, a W20-2 "DETOUR AHEAD" sign is to be used in place of the W20-3 "FREEWAY CLOSED AHEAD" sign.

SIGN PANEL SIZE (Min)

A	48" x 48"
B	48" x 18"
C	48" x 30"

LEGEND

- TRAFFIC CONE
- TRAFFIC CONE (OPTIONAL TAPER)
- TEMPORARY TRAFFIC CONTROL SIGN
- FLASHING ARROW SIGN (FAS)
- FAS SUPPORT OR TRAILER
- PORTABLE FLASHING BEACON

STATE OF CALIFORNIA
DEPARTMENT OF TRANSPORTATION

TRAFFIC CONTROL SYSTEM FOR LANE CLOSURES ON FREEWAYS AND EXPRESSWAYS

NO SCALE

RSP T10A DATED APRIL 19, 2013 SUPERSEDES STANDARD PLAN T10A DATED MAY 20, 2011 - PAGE 238 OF THE STANDARD PLANS BOOK DATED 2010.

REVISED STANDARD PLAN RSP T10A

2010 REVISED STANDARD PLAN RSP T10A

12-18-12

Dist	COUNTY	ROUTE	POST MILES TOTAL PROJECT	SHEET No.	TOTAL SHEETS
11	Imp, SD	5,7,8,15, 52,etc.	Var	43	59

REGISTERED CIVIL ENGINEER

April 19, 2013
PLANS APPROVAL DATE

REGISTERED PROFESSIONAL ENGINEER Gurinderpal Bhullar No. C48815 Exp. 9-30-14 CIVIL STATE OF CALIFORNIA

THE STATE OF CALIFORNIA OR ITS OFFICERS OR AGENTS SHALL NOT BE RESPONSIBLE FOR THE ACCURACY OR COMPLETENESS OF SCANNED COPIES OF THIS PLAN SHEET.

TO ACCOMPANY PLANS DATED 10-12-15

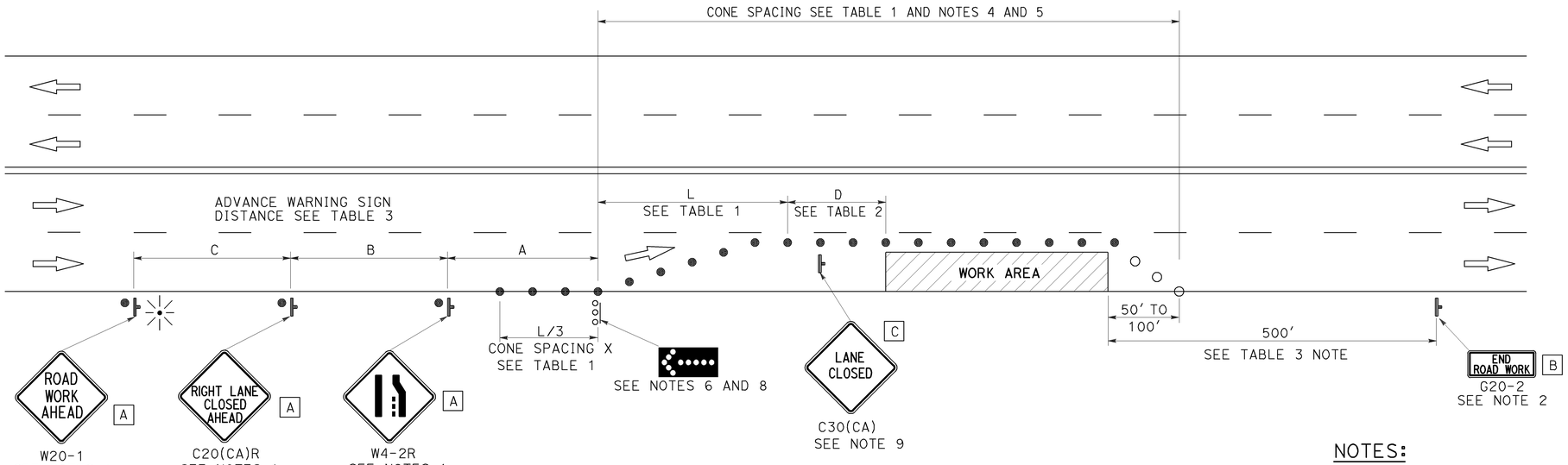

TYPICAL LANE CLOSURE

NOTES:

See Revised Standard Plan RSP T9 for tables.

Use cone spacing X for taper segment, Y for tangent segment or Z for conflict situations, as approriate, per Table 1, unless X, Y, or Z cone spacing is shown on this sheet.

Unless otherwise specified in the special provisions, all temporary warning signs shall have black legend on fluorescent orange background.

California codes are designated by (CA). Otherwise, Federal (MUTCD) codes are shown.

NOTES:

1. Each advance warning sign shall be equipped with at least two flags for daytime closure. Each flag shall be at least 16" x 16" in size and shall be orange or fluorescent red-orange in color. Flashing beacons shall be placed at the locations indicated for lane closure during hours of darkness.
2. A G20-2 "END ROAD WORK" sign, as appropriate, shall be placed at the end of the lane closure unless the end of work area is obvious, or ends within a larger project's limits.
3. If the W20-1 sign would follow within 2000' of a stationary W20-1 or G20-1 "ROAD WORK NEXT _____ MILES", use a C20(CA) sign for the first advance warning sign.
4. All cones used for lane closures during the hours of darkness shall be fitted with retroreflective bands (or sleeves) as specified in the specifications.
5. Portable delineators, placed at one-half the spacing indicated for traffic cones, may be used instead of cones for daytime closures only.
6. Flashing arrow sign shall be either Type I or Type II.
7. For approach speeds over 50 mph, use the "Traffic Control System for Lane Closure On Freeways And Expressways" plan for lane closure details and requirements.
8. A minimum 1500' of sight distance shall be provided where possible for vehicles approaching the first flashing arrow sign. Lane closures shall not begin at the top of crest vertical curve or on a horizontal curve.
9. Place a C30(CA) sign every 2000' throughout length of lane closure.
10. Median lane closures shall conform to the details as shown except that C20(CA)L and W4-2L signs shall be used.
11. At least one person shall be assigned to provide full time maintenance of traffic control devices for lane closure unless, otherwise directed by the Engineer.

LEGEND

- TRAFFIC CONE
- TRAFFIC CONE (OPTIONAL TAPER)
- TEMPORARY TRAFFIC CONTROL SIGN
- FLASHING ARROW SIGN (FAS)
- FAS SUPPORT OR TRAILER
- PORTABLE FLASHING BEACON

SIGN PANEL SIZE (Min)

A	48" x 48"
B	36" x 18"
C	30" x 30"

STATE OF CALIFORNIA
DEPARTMENT OF TRANSPORTATION

TRAFFIC CONTROL SYSTEM FOR LANE CLOSURE ON MULTILANE CONVENTIONAL HIGHWAYS

NO SCALE

RSP T11 DATED APRIL 19, 2013 SUPERSEDES STANDARD PLAN T11 DATED MAY 20, 2011 - PAGE 239 OF THE STANDARD PLANS BOOK DATED 2010.

REVISED STANDARD PLAN RSP T11

2010 REVISED STANDARD PLAN RSP T11

4-2-13

Dist	COUNTY	ROUTE	POST MILES TOTAL PROJECT	SHEET No.	TOTAL SHEETS
11	Imp, SD	5,7,8,15, 52,etc.	Var	44	59

REGISTERED CIVIL ENGINEER

April 19, 2013
PLANS APPROVAL DATE

REGISTERED PROFESSIONAL ENGINEER Gurinderpal Bhullar No. C48815 Exp. 9-30-14 CIVIL STATE OF CALIFORNIA

THE STATE OF CALIFORNIA OR ITS OFFICERS OR AGENTS SHALL NOT BE RESPONSIBLE FOR THE ACCURACY OR COMPLETENESS OF SCANNED COPIES OF THIS PLAN SHEET.

TO ACCOMPANY PLANS DATED 10-12-15

LEGEND

- TRAFFIC CONE
- TEMPORARY TRAFFIC CONTROL SIGN
- FLASHING ARROW SIGN (FAS)
- FAS SUPPORT OR TRAILER
- PORTABLE FLASHING BEACON

SIGN PANEL SIZE (Min)

A	48" x 48"
B	24" x 24"
C	36" x 18"

NOTES:

See Revised Standard Plan RSP T9 for tables.

Use cone spacing X for taper segment, Y for tangent segment or Z for conflict situations, as approriate, per Table 1, unless X, Y, or Z cone spacing is shown on this sheet.

Unless otherwise specified in the special provisions, all temporary warning signs shall have black legend on fluorescent orange background.

California codes are designated by (CA). Otherwise, Federal (MUTCD) codes are shown.

TYPICAL HALF ROAD CLOSURE

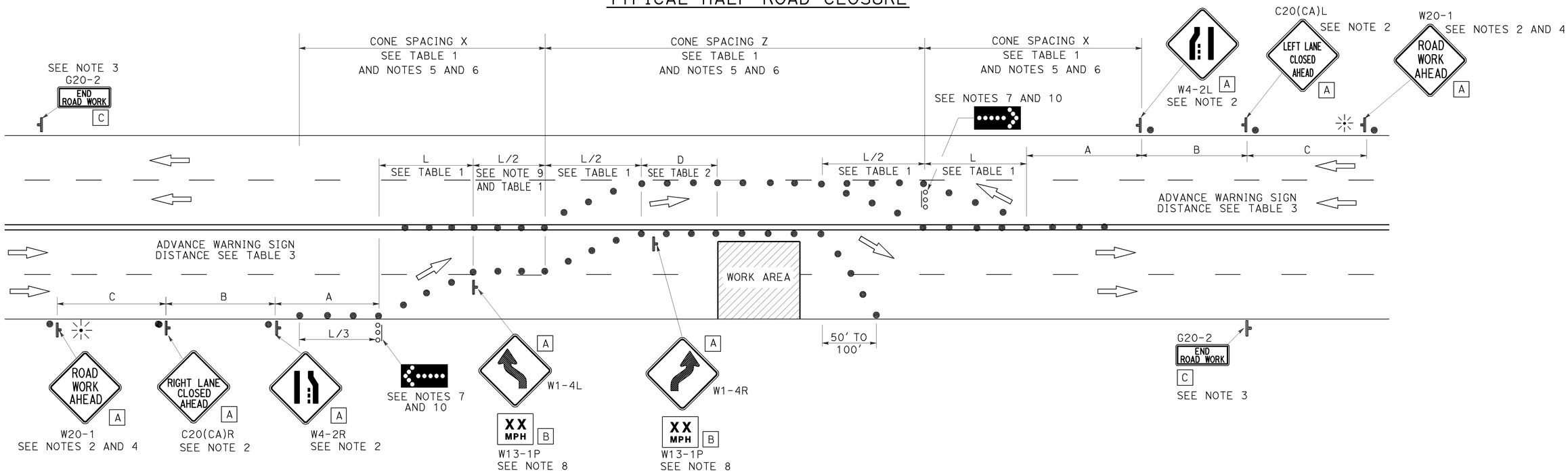

NOTES:

1. At least one person shall be assigned to provide full time maintenance of traffic control devices for lane closure unless, otherwise directed by the Engineer.
2. Each advance warning sign in each direction of travel shall be equipped with at least two flags for daytime closure. Each flag shall be at least 16" x 16" in size and shall be orange or fluorescent red-orange in color. Flashing beacons shall be placed at the locations indicated for lane closure during hours of darkness.
3. A G20-2 "END ROAD WORK" sign, as appropriate, shall be placed at the end of the lane closure unless the end of work area is obvious, or ends within a larger project's limits.
4. If the W20-1 sign would follow within 2000' of a stationary W20-1 or G20-1 "ROAD WORK NEXT _____ MILES", use a C20(CA) sign for the first advance warning sign.
5. All cones used for lane closures during the hours of darkness shall be fitted with retroreflective bands (or sleeves) as specified in the specifications.
6. Portable delineators, placed at one-half the spacing indicated for traffic cones, may be used instead of cones for daytime closures only.
7. Flashing arrow signs shall be either Type I or Type II.
8. Advisory speed will be determined by the Engineer. The W13-1P Plaque will not be required when advisory speed is more than the posted or maximum speed limit.
9. Unless otherwise specified in the special provisions, the tangent (L/2) shall be used.
10. A minimum 1500' of sight distance shall be provided where possible for vehicles approaching the first flashing arrow sign. Lane closures shall not begin at the top of crest vertical curve or on a horizontal curve.

STATE OF CALIFORNIA
DEPARTMENT OF TRANSPORTATION

TRAFFIC CONTROL SYSTEM FOR HALF ROAD CLOSURE ON MULTILANE CONVENTIONAL HIGHWAYS AND EXPRESSWAYS

NO SCALE

RSP T12 DATED APRIL 19, 2013 SUPERSEDES STANDARD PLAN T12
DATED MAY 20, 2011 - PAGE 240 OF THE STANDARD PLANS BOOK DATED 2010.

REVISED STANDARD PLAN RSP T12

2010 REVISED STANDARD PLAN RSP T12

4-2-13

Dist	COUNTY	ROUTE	POST MILES TOTAL PROJECT	SHEET No.	TOTAL SHEETS
11	Imp, SD	5,7,8,15, 52,etc.	Var	45	59

Devinder Singh
REGISTERED CIVIL ENGINEER

October 17, 2014
PLANS APPROVAL DATE

REGISTERED PROFESSIONAL ENGINEER
Devinder Singh
No. C50470
Exp. 6-30-15
CIVIL
STATE OF CALIFORNIA

THE STATE OF CALIFORNIA OR ITS OFFICERS OR AGENTS SHALL NOT BE RESPONSIBLE FOR THE ACCURACY OR COMPLETENESS OF SCANNED COPIES OF THIS PLAN SHEET.

TO ACCOMPANY PLANS DATED 10-12-15

2010 REVISED STANDARD PLAN RSP T13

NOTES:

See Revised Standard Plan RSP T9 for tables.

Use cone spacing X for taper segment, Y for tangent segment or Z for conflict situations, as approriate, per Table 1, unless X, Y, or Z cone spacing is shown on this sheet.

Unless otherwise specified in the special provisions, all temporary warning signs shall have black legend on fluorescent orange background.

California codes are designated by (CA). Otherwise, Federal (MUTCD) codes are shown.

TYPICAL LANE CLOSURE WITH REVERSIBLE CONTROL

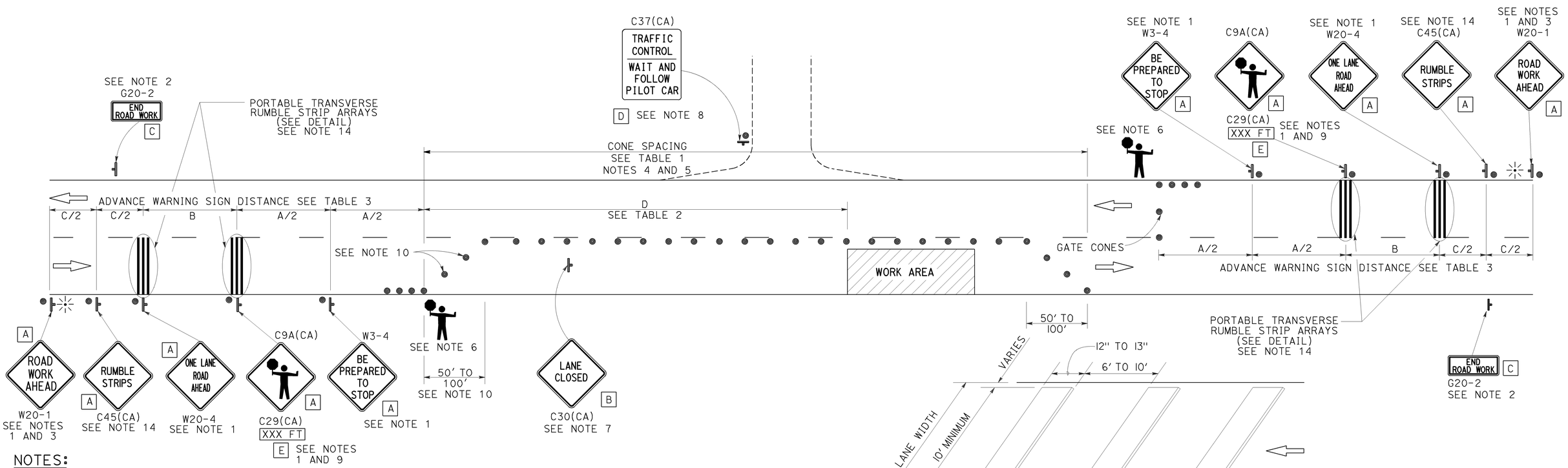

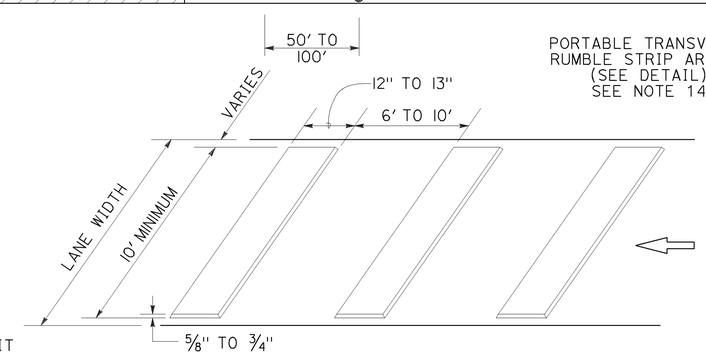

PORTABLE TRANSVERSE RUMBLE STRIP ARRAY DETAIL

NOTES:

1. Each advance warning sign in each direction of travel shall be equipped with at least two flags for daytime closure. Each flag shall be at least 16" x 16" in size and shall be orange or fluorescent red-orange in color. Flashing beacons shall be placed at the locations indicated for lane closure during hours of darkness.
2. A G20-2 "END ROAD WORK" sign, as appropriate, shall be placed at the end of the lane control unless the end of work area is obvious, or ends within a larger project's limits.
3. If the W20-1 sign would follow within 2000' of a stationary W20-1 or G20-1 "ROAD WORK NEXT _____ MILES", use a W20-4 sign for the first advance warning sign.
4. All cones used for lane closures during the hours of darkness shall be fitted with retroreflective bands (or sleeves) as specified in the specifications.
5. Portable delineators, placed at one-half the spacing indicated for traffic cones, may be used instead of cones for daytime closures only.
6. Additional advance flaggers may be required. Flagger should stand in a conspicuous place, be visible to approaching traffic as well as approaching vehicles after the first vehicle has stopped. During the hours of darkness, the flagging-station and flagger shall be illuminated and clearly visible to approaching traffic. The illumination footprint of the lighting on the ground shall be at least 20' in diameter. Place a minimum of four cones at 50' intervals in advance of flagger station as shown.
7. Place C30(CA) "LANE CLOSED" sign at 500' to 1000' intervals throughout extended work areas. They are optional if the work area is visible from the flagger station.
8. When a pilot car is used, place a C37(CA) "TRAFFIC CONTROL-WAIT AND FOLLOW PILOT CAR" sign with black legend on white background at all intersections, driveways and alleys without a flagger within traffic control area. Signs shall be clean and visible at all times. Where traffic can not be effectively self-regulated, at least one flagger shall be used at each intersection within traffic control area.
9. An optional C29(CA) sign may be placed below the C9A(CA) sign.
10. Either traffic cones or barricades shall be placed on the taper. Barricades shall be Type I, II, or III.
11. The color of the portable transverse rumble strips shall be black or orange. Use 2 arrays, each array shall consist of 3 rumble strips.
12. Portable transverse rumble strips shall not be placed on sharp horizontal or vertical curves nor shall they be placed through pedestrian crossings.
13. If the portable transverse rumble strips become out of alignment (skewed) by more than 6 inches, measured from one end to the other, they shall be readjusted to bring the placement back to the original location.
14. Portable transverse rumble strips are not required if any one of the following conditions is satisfied:
    A. Work duration occupies a location for four hours or less
    B. Posted speed limit is below 45 MPH
    C. Work is of emergency nature
    D. Work zone is in snow or icy weather conditions

LEGEND

- TRAFFIC CONE
- TEMPORARY TRAFFIC CONTROL SIGN
- PORTABLE FLASHING BEACON
- FLAGGER

SIGN PANEL SIZE (Min)

A	48" x 48"
B	30" x 30"
C	36" x 18"
D	36" x 42"
E	20" x 7"

STATE OF CALIFORNIA
DEPARTMENT OF TRANSPORTATION

TRAFFIC CONTROL SYSTEM FOR LANE CLOSURE ON TWO LANE CONVENTIONAL HIGHWAYS

NO SCALE

RSP T13 DATED OCTOBER 17, 2014 SUPERSEDES RSP T13 DATED JULY 18, 2014 AND RSP T13 DATED APRIL 19, 2013 AND STANDARD PLAN T13 DATED MAY 20, 2011 - PAGE 241 OF THE STANDARD PLANS BOOK DATED 2010.

REVISED STANDARD PLAN RSP T13

9-26-14

Dist	COUNTY	ROUTE	POST MILES TOTAL PROJECT	SHEET No.	TOTAL SHEETS
11	Imp, SD	5,7,8,15, 52,etc.	Var	46	59

REGISTERED CIVIL ENGINEER

April 19, 2013
PLANS APPROVAL DATE

REGISTERED PROFESSIONAL ENGINEER Gurinderpal Bhullar No. C48815 Exp. 9-30-14 CIVIL STATE OF CALIFORNIA

THE STATE OF CALIFORNIA OR ITS OFFICERS OR AGENTS SHALL NOT BE RESPONSIBLE FOR THE ACCURACY OR COMPLETENESS OF SCANNED COPIES OF THIS PLAN SHEET.

TO ACCOMPANY PLANS DATED 10-12-15

TYPICAL RAMP CLOSURES

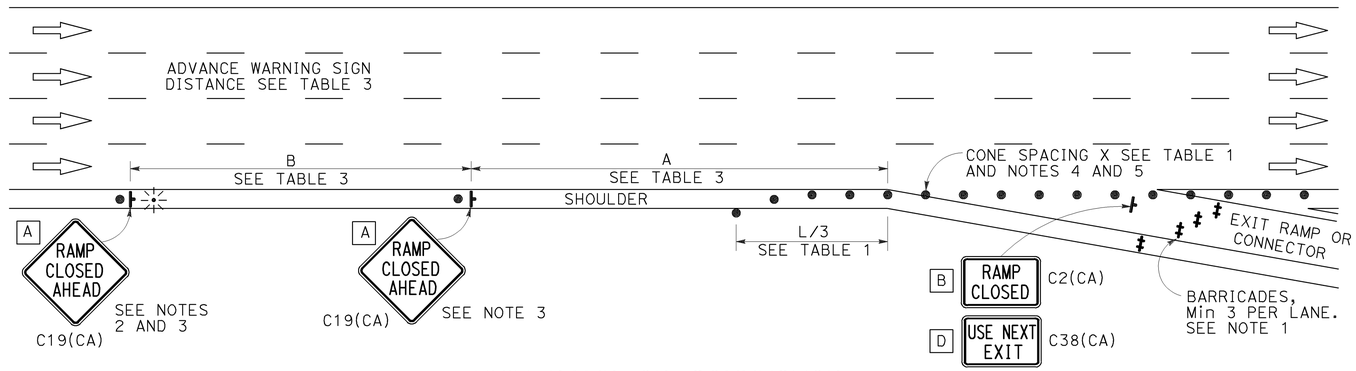

EXIT RAMP OR CONNECTOR

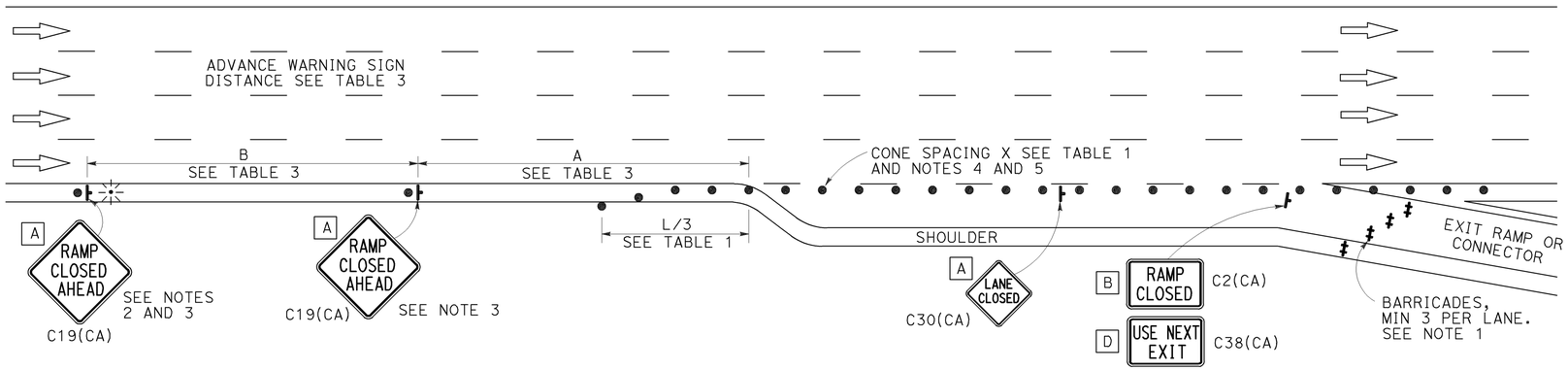

EXIT RAMP OR CONNECTOR WITH ADDITIONAL LANE

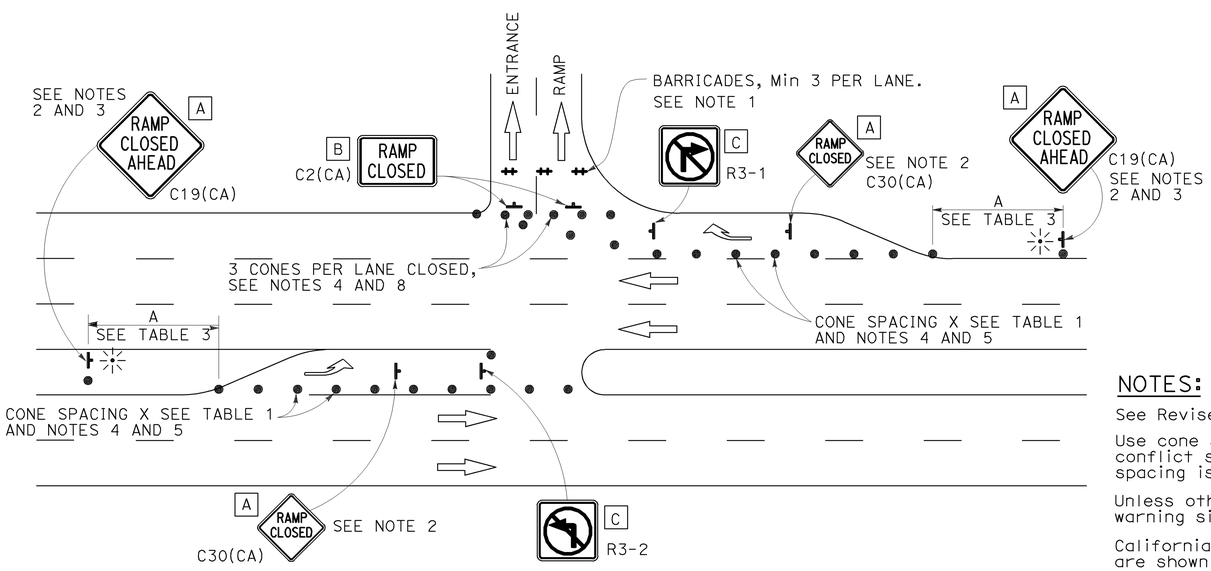

ENTRANCE RAMP WITH TURNING POCKETS

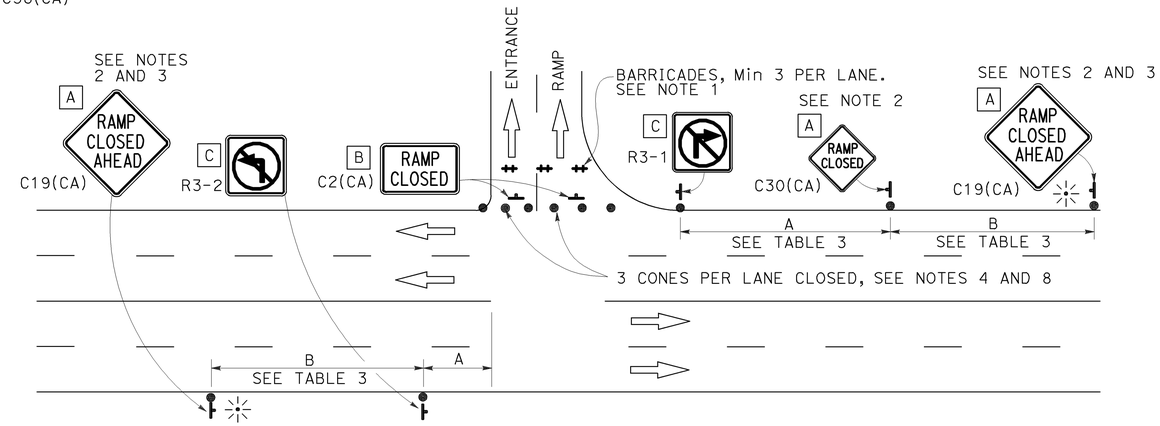

ENTRANCE RAMP WITHOUT TURNING POCKETS

SIGN PANEL SIZE (Min)

- A 48" × 48"
- B 48" × 30"
- C 36" × 36"
- D 48" × 36"

LEGEND

- TRAFFIC CONE
- TEMPORARY TRAFFIC CONTROL SIGN
- BARRICADES
- PORTABLE FLASHING BEACON

NOTES:

1. Barricades shall be Type I, II, or III for closures lasting one week or less and Type III for closures lasting longer than one week.
2. In addition to placing the C19(CA) "RAMP CLOSED AHEAD" and C30(CA) "RAMP CLOSED" signs, black on orange overlay plates with the word "CLOSED" may be mounted, as directed by the Engineer, on all guide signs that refer to the closed ramp. The letter size on the overlay shall be the same as the guide sign.
3. Each advance C19(CA) "RAMP CLOSED AHEAD" sign shall be equipped with at least two flags for daytime closure. Each flag shall be at least 16" × 16" in size and shall be orange or fluorescent red-orange in color. A flashing beacon shall be placed on top of the first C19(CA) sign during hours of darkness.
4. All cones used for ramp closures during the hours of darkness shall be fitted with retroreflective bands (or sleeves) as specified in the specifications.
5. Portable delineators, placed at one-half the spacing indicated for traffic cones, may be used instead of cones for daytime ramp closures only.
6. At least one person shall be assigned to provide full time maintenance of traffic control devices, unless otherwise directed by the Engineer.
7. The existing "EXIT" signs shall be covered during ramp closures.
8. A minimum of 3 cones shall be placed transversely across each closed lane and shoulder.

NOTES:

See Revised Standard Plan RSP T9 for tables.

Use cone spacing X for taper segment, Y for tangent segment or Z for conflict situations, as approriate, per Table 1, unless X, Y, or Z cone spacing is shown on this sheet.

Unless otherwise specified in the special provisions, all temporary warning signs shall have black legend on fluorescent orange background.

California codes are designated by (CA). Otherwise, Federal (MUTCD) codes are shown.

STATE OF CALIFORNIA
DEPARTMENT OF TRANSPORTATION

TRAFFIC CONTROL SYSTEM FOR RAMP CLOSURE

NO SCALE

RSP T14 DATED APRIL 19, 2013 SUPERSEDES STANDARD PLAN T14 DATED MAY 20, 2011 - PAGE 242 OF THE STANDARD PLANS BOOK DATED 2010.

REVISED STANDARD PLAN RSP T14

2010 REVISED STANDARD PLAN RSP T14

12-18-12

Dist	COUNTY	ROUTE	POST MILES TOTAL PROJECT	SHEET No.	TOTAL SHEETS
11	Imp, SD	5,7,8,15, 52 etc.	Var	47	59

Theresa Gabriel
REGISTERED ELECTRICAL ENGINEER

July 19, 2013
PLANS APPROVAL DATE

REGISTERED PROFESSIONAL ENGINEER Theresa Aziz Gabriel No. E15129 Exp. 6-30-14 ELECTRICAL STATE OF CALIFORNIA

THE STATE OF CALIFORNIA OR ITS OFFICERS OR AGENTS SHALL NOT BE RESPONSIBLE FOR THE ACCURACY OR COMPLETENESS OF SCANNED COPIES OF THIS PLAN SHEET.

TO ACCOMPANY PLANS DATED 10-12-15

LEGEND:

AB	ABANDON. IF APPLIED TO CONDUIT, REMOVE CONDUCTORS
BC	INSTALL PULL BOX IN EXISTING CONDUIT RUN
BP	PEDESTRIAN BARRICADE, TYPE AS INDICATED ON PLAN
CB	INSTALL CONDUIT INTO EXISTING PULL BOX
CC	CONNECT NEW AND EXISTING CONDUIT. REMOVE EXISTING CONDUCTORS AND INSTALL CONDUCTORS AS INDICATED
CF	CONDUIT TO REMAIN FOR FUTURE USE. REMOVE CONDUCTORS. INSTALL PULL TAPE
DH	DETECTOR HANDHOLE
FA	FOUNDATION TO BE ABANDONED
IS	INSTALL SIGN ON SIGNAL MAST ARM
NS	NO SLIP BASE ON STANDARD
PEC	PHOTOELECTRIC CONTROL
PEU	PHOTOELECTRIC UNIT
RC	EQUIPMENT OR MATERIAL TO BE REMOVED AND BECOME THE PROPERTY OF THE CONTRACTOR
RE	REMOVE ELECTROLIER, FUSES AND BALLAST. TAPE ENDS OF CONDUCTORS
RL	RELOCATE EQUIPMENT
RR	REMOVE AND REUSE EQUIPMENT
RS	REMOVE AND SALVAGE EQUIPMENT
SC	SPLICE NEW TO EXISTING CONDUCTORS
SD	SERVICE DISCONNECT
TSP	TELEPHONE SERVICE POINT

ABBREVIATIONS

APS	ACCESSIBLE PEDESTRIAN SIGNAL
BBS	BATTERY BACKUP SYSTEM
BC	BOLT CIRCLE
BPB	BICYCLE PUSH BUTTON
C	CONDUIT
CB	CIRCUIT BREAKER
CCTV	CLOSED CIRCUIT TELEVISION
Ckt	CIRCUIT
CMS	CHANGEABLE MESSAGE SIGN
Ctid	CALTRANS IDENTIFICATION
Comm	COMMUNICATION
DLC	LOOP DETECTOR LEAD-IN CABLE
EMS	EXTINGUISHABLE MESSAGE SIGN
EVUC	EMERGENCY VEHICLE UNIT CABLE
EVUD	EMERGENCY VEHICLE UNIT DETECTOR
FB	FLASHING BEACON
FBCA	FLASHING BEACON CONTROL ASSEMBLY
FBS	FLASHING BEACON WITH SLIP BASE
FO	FIBER OPTIC
G	EQUIPMENT GROUNDING CONDUCTOR
GB	GROUND BUS
GFCI	GROUND FAULT CIRCUIT INTERRUPTER
HAR	HIGHWAY ADVISORY RADIO
Hex	HEXAGONAL
HPS	HIGH PRESSURE SODIUM
IISNS	INTERNALLY ILLUMINATED STREET NAME SIGN
ISL	INDUCTION SIGN LIGHTING
LED	LIGHT EMITTING DIODE
LMA	LUMINAIRE MAST ARM
LPS	LOW PRESSURE SODIUM
Ltg	LIGHTING
Lum	LUMINAIRE
M	METERED
MAT	MAST ARM MOUNTING TOP ATTACHMENT
MAS	MAST ARM MOUNTING SIDE ATTACHMENT
M/M	MULTIPLE TO MULTIPLE TRANSFORMER
Mtg	MOUNTING
MV	MERCURY VAPOR LIGHTING FIXTURE
MVDS	MICROWAVE VEHICLE DETECTION SYSTEM
N	NEUTRAL (GROUNDED CONDUCTOR)
NB	NEUTRAL BUS
NC	NORMALLY CLOSE
NO	NORMALLY OPEN
P	CIRCUIT BREAKER'S POLE
PB	PULL BOX
PBA	PUSH BUTTON ASSEMBLY
PEC	PHOTOELECTRIC CONTROL
Ped	PEDESTRIAN
PEU	PHOTOELECTRIC UNIT
PT	CONDUIT WITH PULL TAPE
RE	RELOCATED EQUIPMENT
RM	RAMP METERING
RWIS	ROADSIDE WEATHER INFORMATION SYSTEM
SB	SLIP BASE
SIC	SIGNAL INTERCONNECT CABLE
Sig	SIGNAL
SMA	SIGNAL MAST ARM
SNS	STREET NAME SIGN
SP	SERVICE POINT
TDC	TELEPHONE DEMARCATION CABINET
TMS	TRAFFIC MONITORING STATION
TOS	TRAFFIC OPERATIONS SYSTEM
Veh	VEHICLE
VIVDS	VIDEO IMAGE VEHICLE DETECTION SYSTEM
WIM	WEIGH-IN-MOTION
Xfmr	TRANSFORMER

SOFFIT AND WALL MOUNTED LUMINAIRES

PENDANT, 70 W HPS UNLESS OTHERWISE SPECIFIED

FLUSH, 70 W HPS UNLESS OTHERWISE SPECIFIED

WALL SURFACE, 70 W HPS UNLESS OTHERWISE SPECIFIED

EXISTING SOFFIT OR WALL LUMINAIRE TO REMAIN UNMODIFIED

EXISTING SOFFIT OR WALL LUMINAIRE TO BE MODIFIED AS SPECIFIED

NOTE:

Arrow indicates "street side" of luminaire.

COMMONLY USED SYMBOLS FOR UNITED STATES CUSTOMARY UNITS OF MEASUREMENT:

SYMBOL USED	DEFINITIONS
Ω	OHMS
min	MINUTE
s	SECOND
bps	BITS PER SECOND
Bps	BYTES PER SECOND
A	AMPERE
V	VOLT
V(dc)	VOLT (DIRECT CURRENT)
V(ac)	VOLT (ALTERNATING CURRENT)
FC	FOOT - CANDLE
W	WATTS
VA	VOLT-AMPERE
M	MEGA
k	KILO
m	MILLI
μ	MICRO
P	PICO
Hz	HERTZ

MISCELLANEOUS ELECTROLIERS

NEW	EXISTING	
		LUMINAIRE ON WOOD POLE
		NON-STANDARD ELECTROLIER (SEE PROJECT NOTES OR PROJECT PLANS)
		CITY ELECTROLIER
		ELECTROLIER FOUNDATION (FUTURE INSTALLATION)

NOTES:

1. HPS luminaires shall be 310 W HPS when installed on Type 21, 21D, 30, 31 and 32 Standards, unless otherwise specified. HPS luminaires shall be 200 W when installed on other type standards or poles, unless otherwise specified.
2. LED luminaires shall be 235 W when installed on Type 21, 21D, 30, 31 and 32 Standards, unless otherwise specified. LED luminaires shall be 165 W when installed on other type standards or poles, unless otherwise specified.
3. Luminaires shall be the cutoff type, ANSI Type III medium cutoff lighting distribution, unless otherwise specified.

STANDARD ELECTROLIER

NEW	EXISTING	STANDARD TYPE
		15
		15D
		15 STRUCTURE
		15D STRUCTURE
		21
		21D
		21 STRUCTURE
		21D STRUCTURE
		30
		31
		32

STATE OF CALIFORNIA
DEPARTMENT OF TRANSPORTATION

ELECTRICAL SYSTEMS (LEGEND AND ABBREVIATIONS)

NO SCALE

RSP ES-1A DATED JULY 19, 2013 SUPERSEDES STANDARD PLAN ES-1A DATED MAY 20, 2011 - PAGE 425 OF THE STANDARD PLANS BOOK DATED 2010.

REVISED STANDARD PLAN RSP ES-1A

2010 REVISED STANDARD PLAN RSP ES-1A

Dist	COUNTY	ROUTE	POST MILES TOTAL PROJECT	SHEET No.	TOTAL SHEETS
11	Imp, SD	5,7,8,15, 52, etc.	Var	48	59

Theresa Gabriel
REGISTERED ELECTRICAL ENGINEER

July 19, 2013
PLANS APPROVAL DATE

REGISTERED PROFESSIONAL ENGINEER
Theresa Aziz Gabriel
No. E15129
Exp. 6-30-14
ELECTRICAL
STATE OF CALIFORNIA

THE STATE OF CALIFORNIA OR ITS OFFICERS OR AGENTS SHALL NOT BE RESPONSIBLE FOR THE ACCURACY OR COMPLETENESS OF SCANNED COPIES OF THIS PLAN SHEET.

TO ACCOMPANY PLANS DATED 10-12-15

CONDUIT

NEW	EXISTING	
		LIGHTING CONDUIT, UNLESS OTHERWISE INDICATED OR NOTED
		TRAFFIC SIGNAL CONDUIT
C	c	COMMUNICATION CONDUIT
T	t	TELEPHONE CONDUIT
F	f	FIRE ALARM CONDUIT
FO	fo	FIBER OPTIC CONDUIT
		CONDUIT TERMINATION
R	r	CONDUIT RISER ATTACHED TO THE STRUCTURE OR SERVICE POLE

SERVICE EQUIPMENT

NEW	EXISTING	
OH	oh	OVERHEAD LINES
U	U	WOOD POLE, "U" INDICATES UTILITY OWNED
		POLE GUY WITH ANCHOR
		UTILITY TRANSFORMER - GROUND MOUNTED
III	III	SERVICE EQUIPMENT ENCLOSURE TYPE. DOOR INDICATES FRONT OF ENCLOSURE
T	t	TELEPHONE DEMARCATION CABINET

POLE-MOUNTED SERVICE DESIGNATION

TYPE H SERVICE, 28'-10" — TYPE OF INSTALLATION AND POLE HEIGHT ABOVE GRADE

FLASHING BEACON

NEW	EXISTING	
R	R	FLASHING BEACON (ONE VEHICLE SIGNAL HEAD WITH BACKPLATE AND VISOR) "R" INDICATES RED INDICATION, "Y" INDICATES YELLOW INDICATION
Y Y	Y Y	FLASHING BEACON WITH TYPE 15-FBS STANDARD AND A SIGN.
R R	R R	FLASHING BEACON WITH TYPES 9, 9A OR 9B SIGN UNLESS OTHERWISE SPECIFIED OR INDICATED

SIGNAL EQUIPMENT

NEW	EXISTING	
C	C	PEDESTRIAN SIGNAL HEAD "C" INDICATES COUNTDOWN PEDESTRIAN HEAD
		PUSH BUTTON ASSEMBLY POST
		PEDESTRIAN BARRICADE
		VEHICLE SIGNAL HEAD (WITH BACKPLATE AND 3-SECTIONS: RED, YELLOW AND GREEN)
		VEHICLE SIGNAL HEAD WITH ANGLE VISOR
PV	PV	MODIFICATIONS OF BASIC SYMBOL: "L" INDICATES ALL NON-ARROW SECTIONS LOUVERED "LG" INDICATES LOUVERED GREEN SECTION ONLY "PV" INDICATES ALL 12" SECTIONS PROGRAMMED VISIBILITY "8" INDICATES ALL 8" SECTIONS (ONLY WHEN SPECIFIED)
		VEHICLE SIGNAL HEAD CONSISTING OF RED, YELLOW AND GREEN LEFT ARROW SECTIONS
		VEHICLE SIGNAL HEAD CONSISTING OF RED AND YELLOW SECTIONS WITH AN UP GREEN ARROW SECTION
		VEHICLE SIGNAL HEAD (5 SECTION) CONSISTING OF RED, YELLOW AND GREEN SECTIONS WITH YELLOW AND GREEN RIGHT ARROW SECTIONS
		TYPE 15TS STANDARD WITH VEHICLE SIGNAL HEAD AND LUMINAIRE
		TYPE 21TS STANDARD WITH VEHICLE SIGNAL HEAD AND LUMINAIRE
		STANDARD WITH LUMINAIRE AND SIGNAL MAST ARMS AND ATTACHED VEHICLE SIGNAL HEADS
		TYPE 1 STANDARD WITH ATTACHED VEHICLE SIGNAL HEADS
		STANDARD WITH A SIGNAL MAST ARM, ATTACHED VEHICLE SIGNAL HEADS AND INTERNALLY ILLUMINATED STREET NAME SIGN
		CONTROLLER ASSEMBLY. DOOR INDICATES FRONT OF CABINET

SIGNAL EQUIPMENT Cont

NEW	EXISTING	
		GUARD POST
		TYPE 1 STANDARD WITH RAMP METERING SIGN
		OPTICAL DETECTOR FOR THE EMERGENCY VEHICLE DETECTION SYSTEM

NOTES:

1. All signal sections shall be 12" unless shown otherwise.
2. Signal heads shall be provided with backplates unless shown otherwise.

ILLUMINATED OVERHEAD SIGN

NEW	EXISTING	
		SINGLE POST, SINGLE ILLUMINATED SIGN, BALANCED BUTTERFLY
		SINGLE POST, DOUBLE ILLUMINATED SIGN, BALANCED BUTTERFLY
		SINGLE POST, SINGLE ILLUMINATED SIGN, FULL CANTILEVER
		DOUBLE POST, SINGLE ILLUMINATED SIGN
		SINGLE ILLUMINATED SIGN MOUNTED ON STRUCTURE
		DOUBLE POST, SINGLE ILLUMINATED SIGN WITH ELECTROLIER

STATE OF CALIFORNIA
DEPARTMENT OF TRANSPORTATION

ELECTRICAL SYSTEMS (LEGEND AND ABBREVIATIONS)

NO SCALE

RSP ES-1B DATED JULY 19, 2013 SUPERSEDES STANDARD PLAN ES-1B DATED MAY 20, 2011 - PAGE 426 OF THE STANDARD PLANS BOOK DATED 2010.

REVISED STANDARD PLAN RSP ES-1B

2010 REVISED STANDARD PLAN RSP ES-1B

7-15-13

Dist	COUNTY	ROUTE	POST MILES TOTAL PROJECT	SHEET No.	TOTAL SHEETS
11	Imp, SD	5,7,8,15, 52, etc.	Var	49	59

Theresa Gabriel
REGISTERED ELECTRICAL ENGINEER

July 19, 2013
PLANS APPROVAL DATE

REGISTERED PROFESSIONAL ENGINEER
Theresa Aziz Gabriel
No. E15129
Exp. 6-30-14
ELECTRICAL
STATE OF CALIFORNIA

THE STATE OF CALIFORNIA OR ITS OFFICERS OR AGENTS SHALL NOT BE RESPONSIBLE FOR THE ACCURACY OR COMPLETENESS OF SCANNED COPIES OF THIS PLAN SHEET.

TO ACCOMPANY PLANS DATED 10-12-15

EQUIPMENT IDENTIFICATION

ILLUMINATED SIGN IDENTIFICATION NUMBER:

SIGN No. 12345
10 ISL SCI 1.0

- SIGN NUMBER - PLACE ON POST OR STRUCTURE
- TRANSFORMER RATING (kVA)
- LIGHTING CONTROL TYPE
- NUMBER AND TYPE OF FIXTURES

DO NOT PLACE ON STANDARD OR STRUCTURE

ELECTROLIER OR EQUIPMENT IDENTIFICATION NUMBER:

12345 - 15'-0"

- MAST ARM LENGTH, IF SHOWN. DO NOT PLACE ON STANDARD OR STRUCTURE
- EQUIPMENT NUMBER - PLACE ON STANDARD OR STRUCTURE. EXISTING EQUIPMENT NUMBERS ARE SHOWN IN PARENTHESIS

CONDUIT AND CONDUCTOR IDENTIFICATION:

1½"C, 2#10, 15#14, 2 DLC, 12P#18

- PAIR
- NUMBER AND SIZE OF CONDUCTORS AND CABLES
- SIZE OF CONDUIT IN INCHES

ø1, ø2, ø2P, etc.	TRAFFIC PHASE IDENTIFICATION FOR SIGNAL FACES, DETECTORS AND PHASE DIAGRAMS
1 2 3	LEGEND NUMBERS
A B C	EQUIPMENT, SIGNAL POLES, INSTALLATION OR ITEMS
1 2 3	CONDUIT RUN NUMBERS

SIGNAL AND LIGHTING STANDARD (TYPICAL DESIGNATION):

19A - 3 - 100

- WIND VELOCITY = 100 mph
- CASE 3 ARM LOADING
- STANDARD TYPE
- STANDARD PLAN SHEET NUMBER
- DETAIL, NUMBER, SECTION, TYPE OR ELEVATION

MISCELLANEOUS EQUIPMENT

NEW	EXISTING	
CMS	cms	CHANGEABLE MESSAGE SIGN
		CLOSED CIRCUIT TELEVISION CAMERA
		HIGHWAY ADVISORY RADIO POLE AND ANTENNA
EMS	ems	EXTINGUISHABLE MESSAGE SIGN
M V	m v	DETECTION DEVICE M = MICROWAVE SENSOR V = VIDEO IMAGE SENSOR

WIRING DIAGRAM LEGEND

----	EXTERNAL CONDUCTOR
	CONDUCTOR OR BUS
	TIE POINT
	CONTACTOR COIL
	CONTACTOR, NO CONTACT
	TERMINAL BLOCKS
	CONTACTOR, NC CONTACT
	ENCLOSURE BOND
	GROUNDING ELECTRODE
	CIRCUIT BREAKER
	RECEPTACLE

PULL BOXES

NEW	EXISTING	
		PULL BOX, No. 5 UNLESS OTHERWISE INDICATED OR NOTED
3	9A(21)	PULL BOX, ADDITIONAL DESIGNATIONS OR DESCRIPTIONS

3 No. 3½ PULL BOX
5 No. 5 PULL BOX
6 No. 6 PULL BOX
7 No. 7 (CEILING PULL BOX)
8 No. 8 (PENDANT SOFFIT PULL BOX)
9 No. 9 PULL BOX
9A No. 9A PULL BOX

(C) COMMUNICATIONS PULL BOX
(E) PULL BOX WITH EXTENSION
(S) SPRINKLER CONTROL PULL BOX
(21) ANCHOR BOLTS AND CONDUIT FOR FUTURE INSTALLATION OF TYPE 21 STANDARD
(T) TRAFFIC PULL BOX

VEHICLE DETECTORS

5 J 9 U

- VEHICLE DETECTOR DESIGNATION
- U = UPPER
  L = LOWER
- SLOT NUMBER IN INPUT FILE
- INPUT FILE (I OR J)
- PHASE

NEW	EXISTING	
		TYPE A DETECTOR LOOP. OUTLINE OF SAWCUT SHOWN
		TYPE B DETECTOR LOOP. OUTLINE OF SAWCUT SHOWN
		TYPE C DETECTOR LOOP. OUTLINE OF SAWCUT SHOWN
		TYPE D DETECTOR LOOP. OUTLINE OF SAWCUT SHOWN
		TYPE E DETECTOR LOOP. OUTLINE OF SAWCUT SHOWN
		TYPE Q DETECTOR LOOP. OUTLINE OF SAWCUT SHOWN
		MAGNETIC DETECTOR
DH	dh	DETECTOR HANDHOLE
		MICROWAVE OR VIDEO DETECTION ZONE

STATE OF CALIFORNIA
DEPARTMENT OF TRANSPORTATION

ELECTRICAL SYSTEMS (LEGEND AND ABBREVIATIONS)

NO SCALE

RSP ES-1C DATED JULY 19, 2013 SUPERSEDES STANDARD PLAN ES-1C DATED MAY 20, 2011 - PAGE 427 OF THE STANDARD PLANS BOOK DATED 2010.

REVISED STANDARD PLAN RSP ES-1C

2010 REVISED STANDARD PLAN RSP ES-1C

7-11-13

Dist	COUNTY	ROUTE	POST MILES TOTAL PROJECT	SHEET No.	TOTAL SHEETS
11	Imp, SD	5,7,8,15, 52, etc.	Var	50	59

Theresa Gabriel
REGISTERED ELECTRICAL ENGINEER

July 19, 2013
PLANS APPROVAL DATE

REGISTERED PROFESSIONAL ENGINEER
Theresa Aziz Gabriel
No. E15129
Exp. 6-30-14
ELECTRICAL
STATE OF CALIFORNIA

THE STATE OF CALIFORNIA OR ITS OFFICERS OR AGENTS SHALL NOT BE RESPONSIBLE FOR THE ACCURACY OR COMPLETENESS OF SCANNED COPIES OF THIS PLAN SHEET.

TO ACCOMPANY PLANS DATED 10-12-15

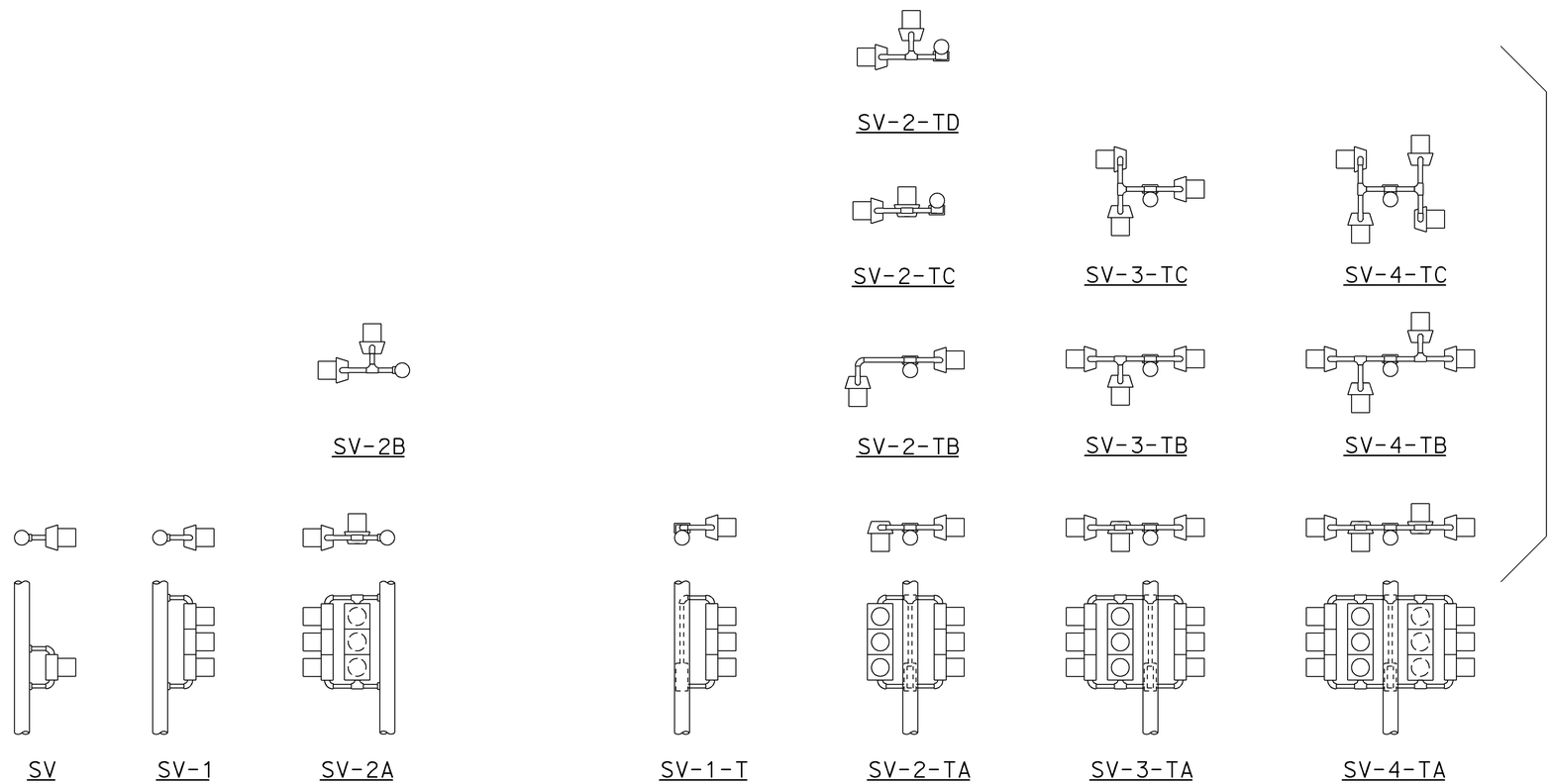

SIDE MOUNTINGS

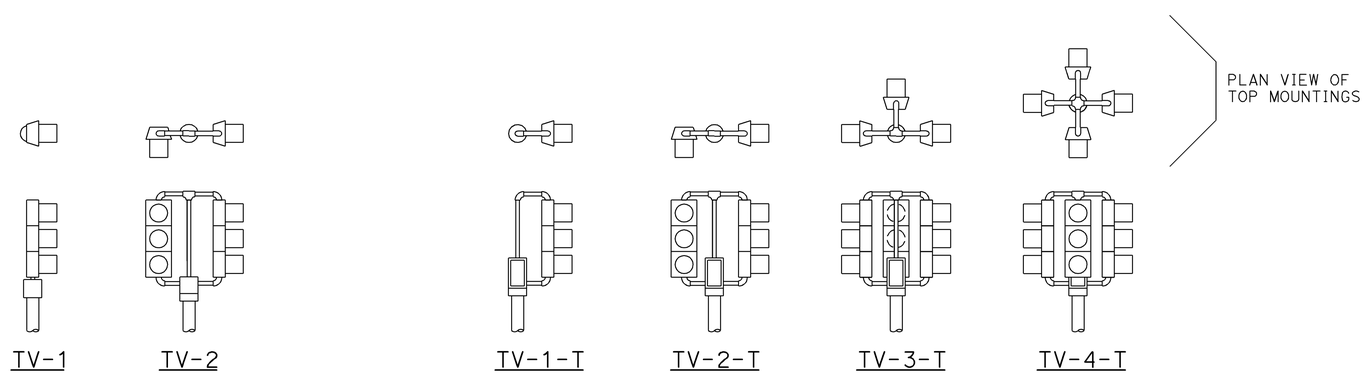

TOP MOUNTINGS

ABBREVIATIONS:

SV	SIDE MOUNTED VEHICLE SIGNALS
T	TERMINAL COMPARTMENT
TV	TOP MOUNTED VEHICLE SIGNALS
1, 2, 3, 4	NUMBER OF SIGNAL FACES (3 - SECTION, UNLESS OTHERWISE INDICATED)
A, B, C, D	CONFIGURATION OF SIGNALS

NOTES:

1. Mountings shall be oriented to provide maximum horizontal clearance to adjacent roadway.
2. Bracket arms shall be long enough to permit proper alignment of signals and backplate installation.
3. See Standard Plans ES-4D and ES-4E for attachment fitting details.

STATE OF CALIFORNIA
DEPARTMENT OF TRANSPORTATION

ELECTRICAL SYSTEMS (VEHICULAR SIGNAL HEADS AND MOUNTINGS)

NO SCALE

RSP ES-4A DATED JULY 19, 2013 SUPERSEDES STANDARD PLAN ES-4A DATED MAY 20, 2011 - PAGE 443 OF THE STANDARD PLANS BOOK DATED 2010.

REVISED STANDARD PLAN RSP ES-4A

2010 REVISED STANDARD PLAN RSP ES-4A

7-9-13

Dist	COUNTY	ROUTE	POST MILES TOTAL PROJECT	SHEET No.	TOTAL SHEETS
11	Imp, SD	5,7,8,15, 52, etc.	Var	51	59

Theresa Gabriel
REGISTERED ELECTRICAL ENGINEER

October 17, 2014
PLANS APPROVAL DATE

REGISTERED PROFESSIONAL ENGINEER
Theresa Aziz Gabriel
No. E15129
Exp. 6-30-16
ELECTRICAL
STATE OF CALIFORNIA

THE STATE OF CALIFORNIA OR ITS OFFICERS OR AGENTS SHALL NOT BE RESPONSIBLE FOR THE ACCURACY OR COMPLETENESS OF SCANNED COPIES OF THIS PLAN SHEET.

TO ACCOMPANY PLANS DATED 10-12-15

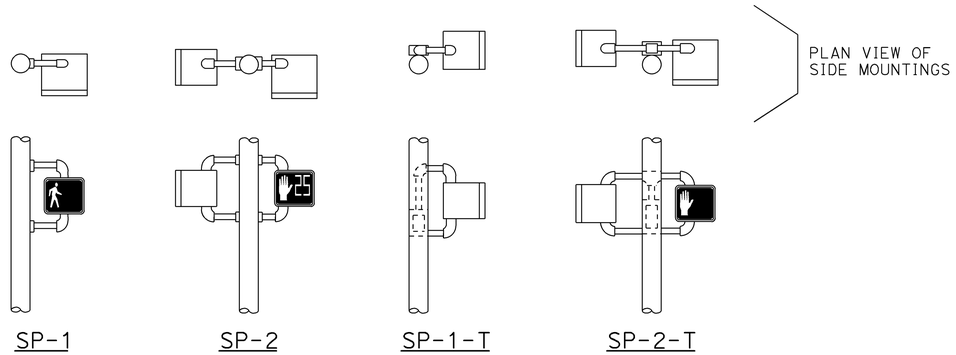

SP-1 SP-2 SP-1-T SP-2-T

SIDE MOUNTINGS

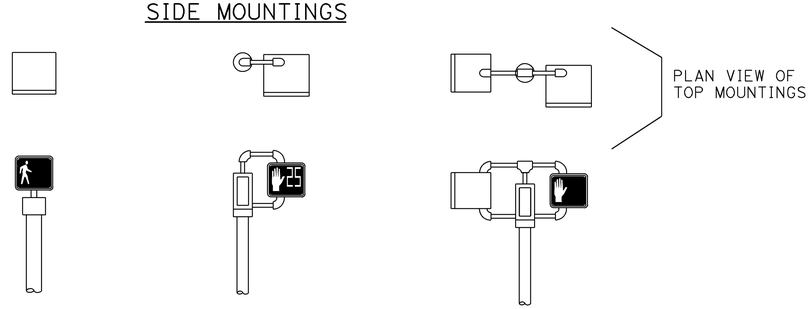

TP-1 TP-1-T TP-2-T

TOP MOUNTINGS

PEDESTRIAN SIGNALS AND MOUNTINGS

DETAIL A

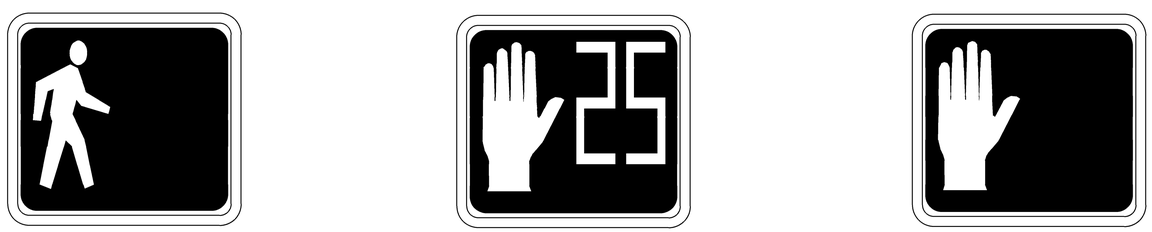

PERSON WALKING INTERVAL FLASHING UPRAISED HAND INTERVAL STEADY UPRAISED HAND INTERVAL

PEDESTRIAN SIGNAL MODULE WITH COUNTDOWN

DETAIL B

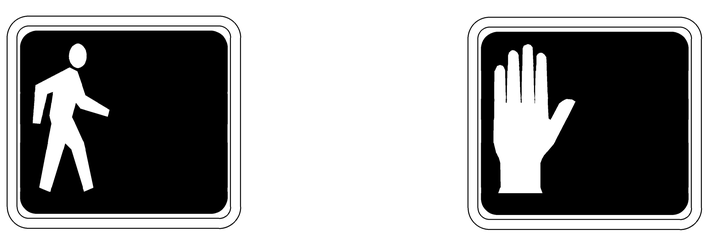

PERSON WALKING INTERVAL STEADY UPRAISED HAND INTERVAL

PEDESTRIAN SIGNAL MODULE WITHOUT COUNTDOWN

DETAIL C

NOTES:

1. Mounting shall be oriented to provide maximum horizontal clearance to adjacent roadway.
2. Bracket arms shall be long enough to permit proper alignment of signals.
3. See Standard Plan ES-4D for attachment fittings details.

ABBREVIATIONS:

1, 2	NUMBER OF SIGNAL FACES
SP	SIDE MOUNTED PEDESTRIAN SIGNAL
T	TERMINAL COMPARTMENT
TP	TOP MOUNTED PEDESTRIAN SIGNAL

STATE OF CALIFORNIA
DEPARTMENT OF TRANSPORTATION

ELECTRICAL SYSTEMS (PEDESTRIAN SIGNAL)

NO SCALE

RSP ES-4B DATED OCTOBER 17, 2014 SUPERSEDES RSP ES-4B DATED JULY 19, 2013 AND STANDARD PLAN ES-4B DATED MAY 20, 2011 - PAGE 444 OF THE STANDARD PLANS BOOK DATED 2010.

REVISED STANDARD PLAN RSP ES-4B

2010 REVISED STANDARD PLAN RSP ES-4B

9-23-14

Dist	COUNTY	ROUTE	POST MILES TOTAL PROJECT	SHEET No.	TOTAL SHEETS
11	Imp, SD	5,7,8,15, 52, etc.	Var	52	59

Theresa Gabriel
REGISTERED ELECTRICAL ENGINEER

July 19, 2013
PLANS APPROVAL DATE

REGISTERED PROFESSIONAL ENGINEER Theresa Aziz Gabriel No. E15129 Exp. 6-30-14 ELECTRICAL STATE OF CALIFORNIA

THE STATE OF CALIFORNIA OR ITS OFFICERS OR AGENTS SHALL NOT BE RESPONSIBLE FOR THE ACCURACY OR COMPLETENESS OF SCANNED COPIES OF THIS PLAN SHEET.

TO ACCOMPANY PLANS DATED 10-12-15

VISORS

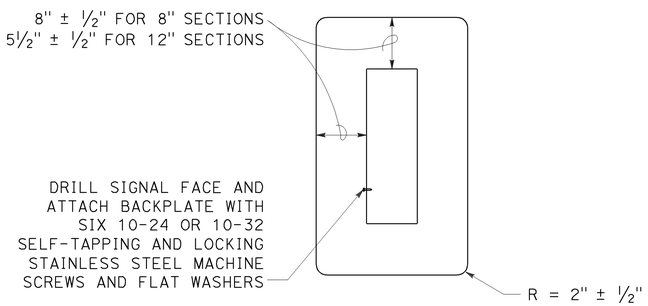

8" AND 12" SECTIONS

BACKPLATE

1/16" minimum thickness
3001-14 aluminum or plastic
when specified

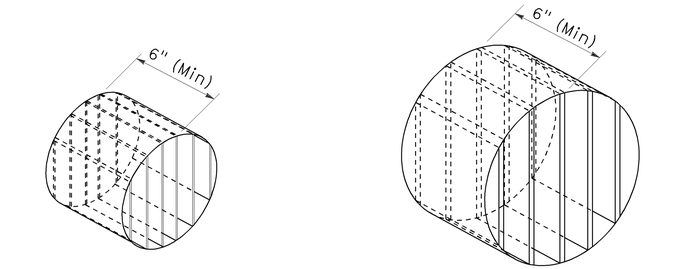

ISOMETRIC VIEW

ISOMETRIC VIEW

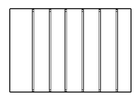

SECTION A-A

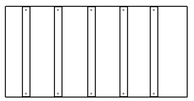

SECTION B-B

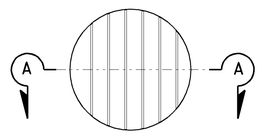

8" DIAMETER FRONT VIEW

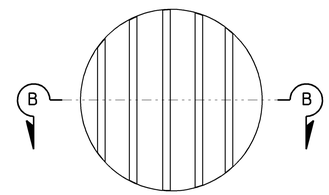

12" DIAMETER FRONT VIEW

DIRECTIONAL LOUVER

Directional louvers shall be oriented as directed by the Engineer and secured in place with one plated brass machine screw and nut.

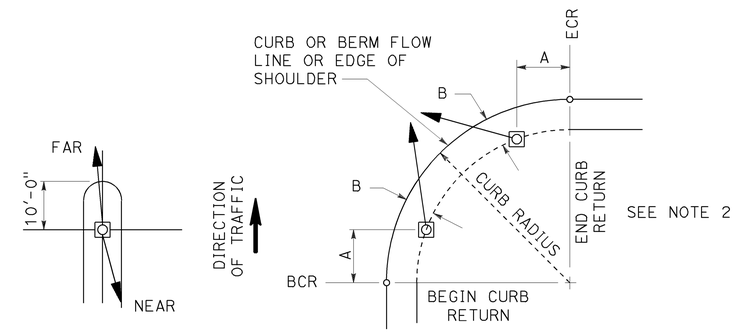

NOTES:

1. Typical signal pole placement unless dimensioned on plans.
2. For A and B dimensions, see Pole Schedule, or as directed by the Engineer.

SIGNAL STANDARD PLACEMENT DIMENSIONS AND EQUIPMENT LOCATIONS

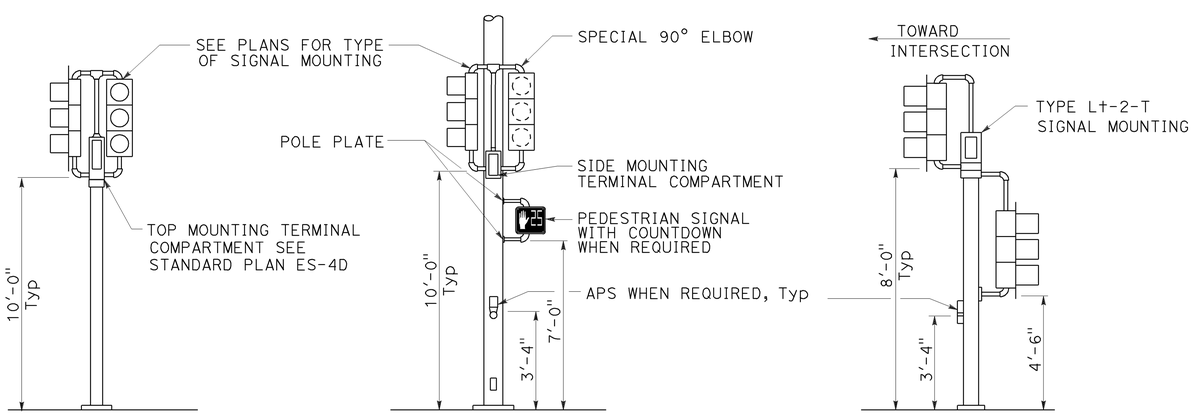

TOP MOUNTED SIGNALS (TV)

Type 1-A, 1-B, 1-C and 1-D standard as indicated on the plans

SIDE MOUNTED SIGNALS (SV AND SP)

Normally used on standards with luminaire or signal mast arm

LEFT TURN LANE SIGNAL

Type 1-A, 1-B, 1-C and 1-D standard as indicated on plans

TYPICAL SIGNAL INSTALLATIONS

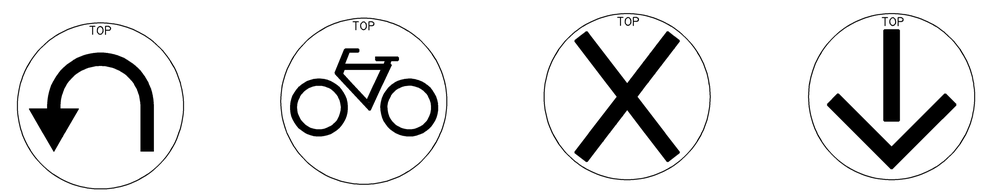

U-TURN

BICYCLE

LANE CONTROL

LANE CONTROL

SIGNAL FACES

STATE OF CALIFORNIA
DEPARTMENT OF TRANSPORTATION

ELECTRICAL SYSTEMS (VEHICULAR SIGNAL HEADS AND MOUNTINGS)

NO SCALE

RSP ES-4C DATED JULY 19, 2013 SUPERSEDES STANDARD PLAN ES-04C DATED MAY 20, 2011 - PAGE 445 OF THE STANDARD PLANS BOOK DATED 2010.

REVISED STANDARD PLAN RSP ES-4C

2010 REVISED STANDARD PLAN RSP ES-4C

7-10-13

Dist	COUNTY	ROUTE	POST MILES TOTAL PROJECT	SHEET No.	TOTAL SHEETS
11	Imp, SD	5,7,8,15, 52, etc.	Var	53	59

Theresa Gabriel
REGISTERED ELECTRICAL ENGINEER

July 19, 2013
PLANS APPROVAL DATE

REGISTERED PROFESSIONAL ENGINEER
Theresa Aziz Gabriel
No. E15129
Exp. 6-30-14
ELECTRICAL
STATE OF CALIFORNIA

THE STATE OF CALIFORNIA OR ITS OFFICERS OR AGENTS SHALL NOT BE RESPONSIBLE FOR THE ACCURACY OR COMPLETENESS OF SCANNED COPIES OF THIS PLAN SHEET.

TO ACCOMPANY PLANS DATED 10-12-15

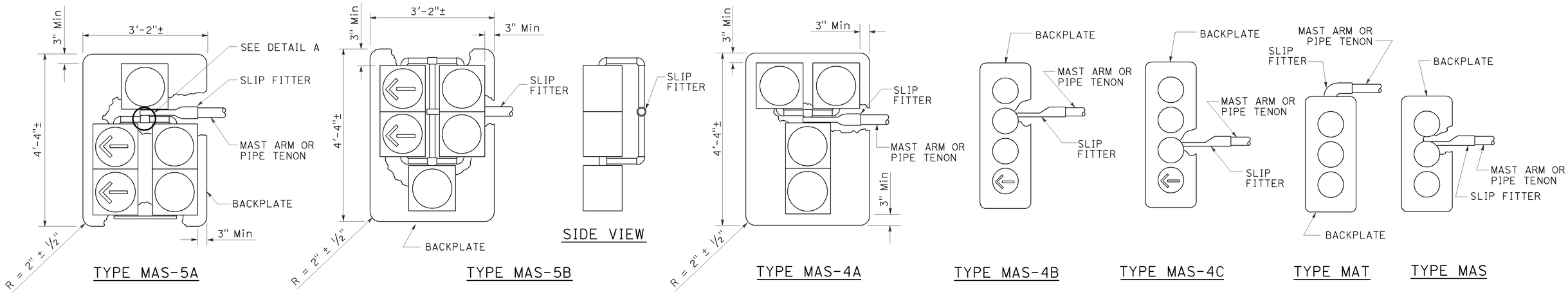

MAST ARM MOUNTINGS

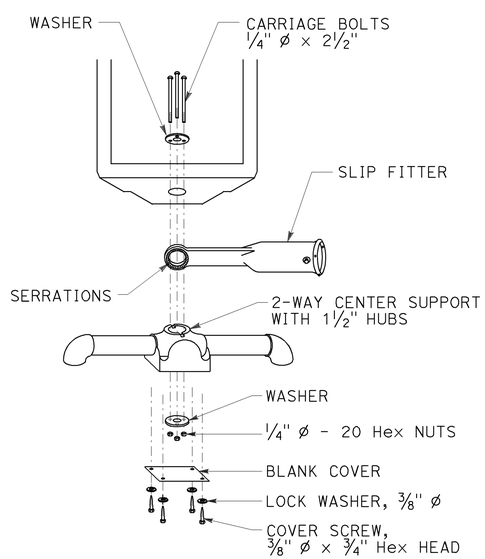

DETAIL A

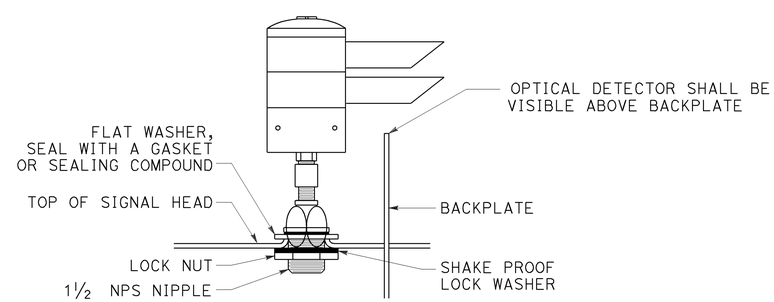

OPTICAL DETECTOR MOUNTING FOR EMERGENCY VEHICLE DETECTION SYSTEM

DETAIL B

STATE OF CALIFORNIA
DEPARTMENT OF TRANSPORTATION

ELECTRICAL SYSTEMS (VEHICULAR SIGNAL HEADS AND OPTICAL DETECTOR MOUNTING)

NO SCALE

RSP ES-4E DATED JULY 19, 2013 SUPERSEDES STANDARD PLAN ES-4E DATED MAY 20, 2011 - 447 OF THE STANDARD PLANS BOOK DATED 2010.

REVISED STANDARD PLAN RSP ES-4E

2010 REVISED STANDARD PLAN RSP ES-4E

Dist	COUNTY	ROUTE	POST MILES TOTAL PROJECT	SHEET No.	TOTAL SHEETS
11	Imp, SD	5,7,8,15, 52, etc.	Var	54	59

Theresa Gabriel
REGISTERED ELECTRICAL ENGINEER

July 19, 2013
PLANS APPROVAL DATE

REGISTERED PROFESSIONAL ENGINEER
Theresa Aziz Gabriel
No. E15129
Exp. 6-30-14
ELECTRICAL
STATE OF CALIFORNIA

THE STATE OF CALIFORNIA OR ITS OFFICERS OR AGENTS SHALL NOT BE RESPONSIBLE FOR THE ACCURACY OR COMPLETENESS OF SCANNED COPIES OF THIS PLAN SHEET.

TO ACCOMPANY PLANS DATED 10-12-15

2010 REVISED STANDARD PLAN RSP ES-5B

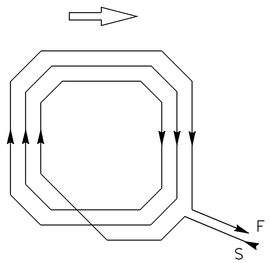

WINDING DETAIL

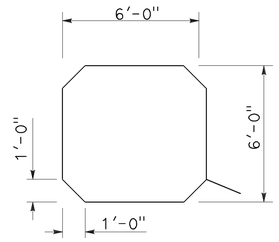

SAWCUT DETAIL

TYPE A LOOP DETECTOR CONFIGURATION

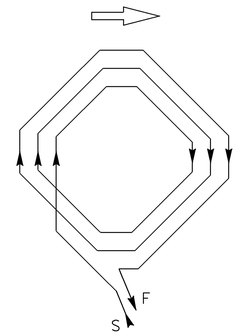

WINDING DETAIL

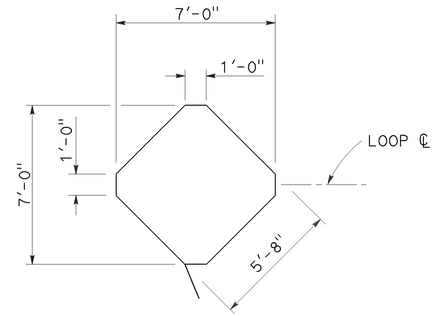

SAWCUT DETAIL

TYPE B LOOP DETECTOR CONFIGURATION

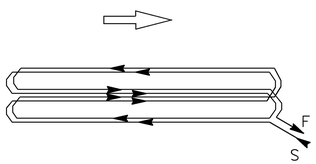

WINDING DETAIL

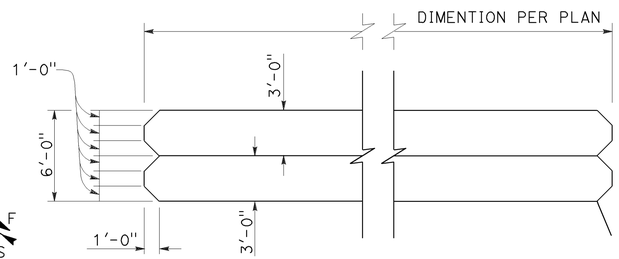

SAWCUT DETAIL

TYPE C LOOP DETECTOR CONFIGURATION

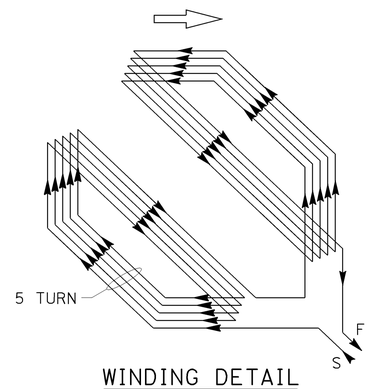

WINDING DETAIL

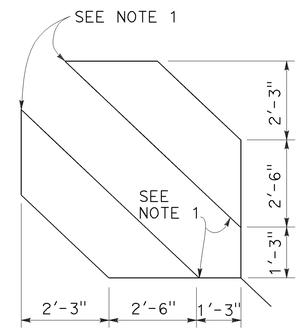

SAWCUT DETAIL

TYPE D LOOP DETECTOR CONFIGURATION

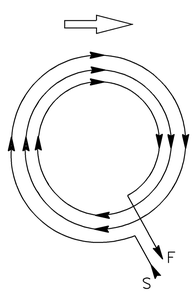

WINDING DETAIL

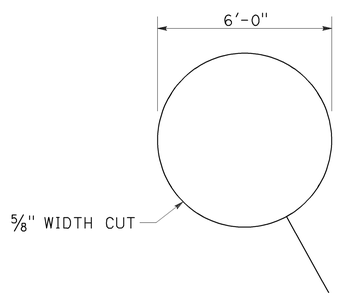

SAWCUT DETAIL

TYPE E LOOP DETECTOR CONFIGURATION

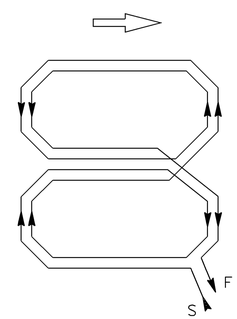

WINDING DETAIL

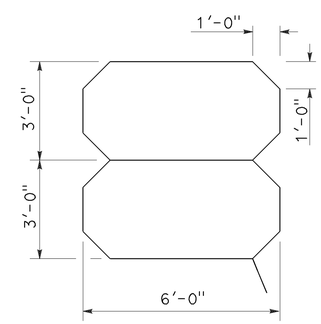

SAWCUT DETAIL

TYPE Q LOOP DETECTOR CONFIGURATION

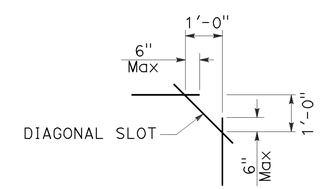

PLAN VIEW OF DIAGONAL SLOT AT CORNERS

NOTES:

1. Round corners of acute angle sawcuts to prevent damage to conductors.
2. Typical distance separating loops from edge to edge is 10' for Type A, B, D and E installation in single lane.

STATE OF CALIFORNIA
DEPARTMENT OF TRANSPORTATION

ELECTRICAL SYSTEMS (DETECTORS)

NO SCALE

RSP ES-5B DATED JULY 19, 2013 SUPERSEDES STANDARD PLAN ES-5B DATED MAY 20, 2011 - PAGE 449 OF THE STANDARD PLANS BOOK DATED 2010.

REVISED STANDARD PLAN RSP ES-5B

Dist	COUNTY	ROUTE	POST MILES TOTAL PROJECT	SHEET No.	TOTAL SHEETS
11	Imp, SD	5,7,8,15, 52, etc.	Var	55	59

Theresa Gabriel
REGISTERED ELECTRICAL ENGINEER

July 19, 2013
PLANS APPROVAL DATE

REGISTERED PROFESSIONAL ENGINEER Theresa Aziz Gabriel No. E15129 Exp. 6-30-14 ELECTRICAL STATE OF CALIFORNIA

THE STATE OF CALIFORNIA OR ITS OFFICERS OR AGENTS SHALL NOT BE RESPONSIBLE FOR THE ACCURACY OR COMPLETENESS OF SCANNED COPIES OF THIS PLAN SHEET.

TO ACCOMPANY PLANS DATED 10-12-15

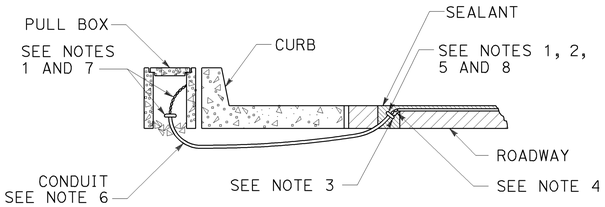

TYPE A
CURB TERMINATION DETAIL

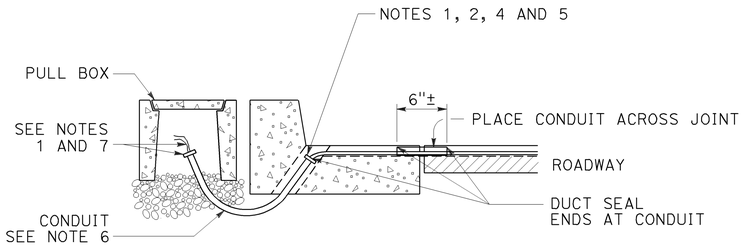

CROSS SECTION

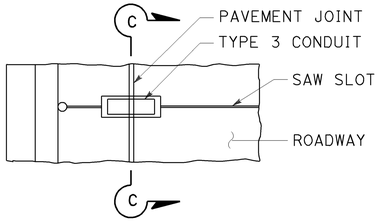

PLAN VIEW

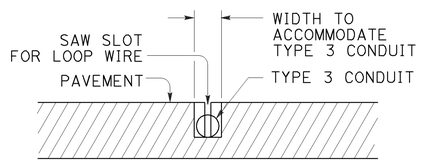

SECTION C-C

TYPE B
CURB TERMINATION DETAIL

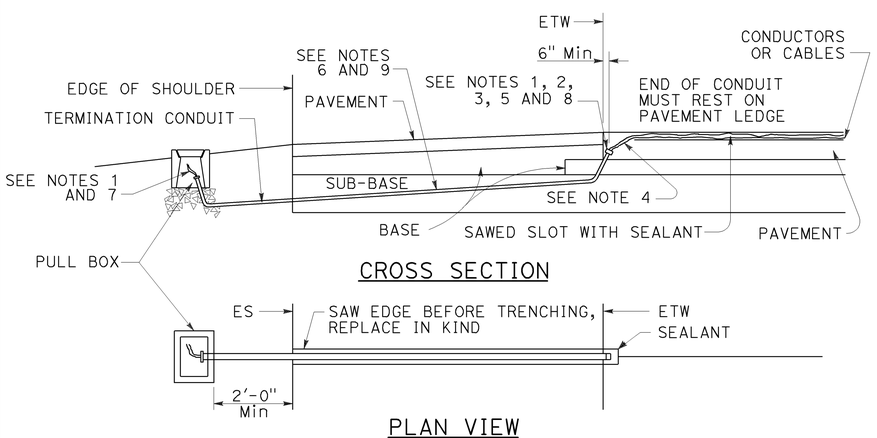

CROSS SECTION

PLAN VIEW

SHOULDER TERMINATION DETAILS

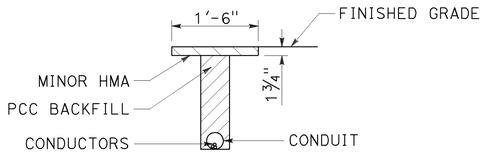

"T" TRENCH
DETAIL T

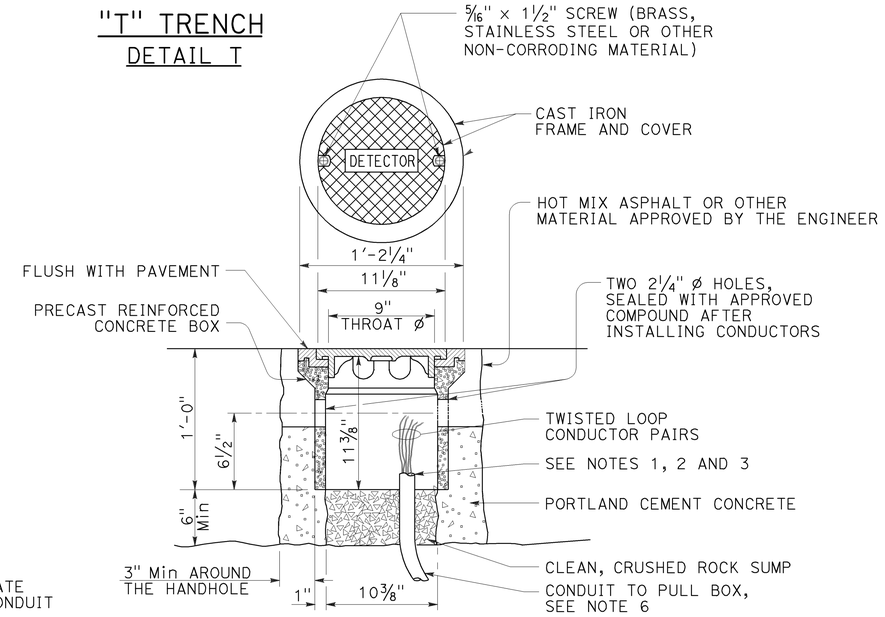

DETECTOR HANDHOLE DETAIL

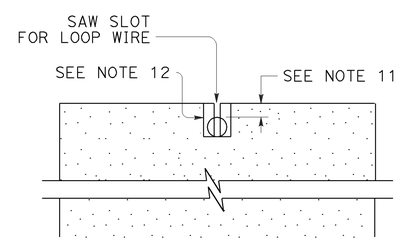

SECTION A-A

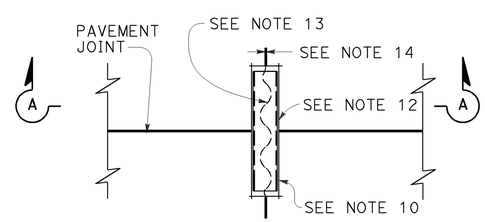

PLAN VIEW

TYPICAL LOOP LEAD-IN DETAIL AT PAVEMENT JOINT

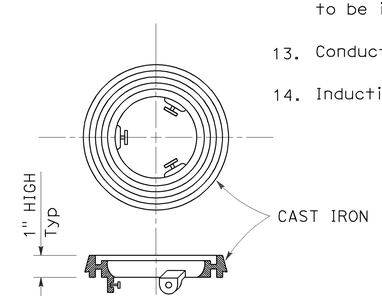

LOCKING GRADE RING

NOTES:

1. Bushing shall be used at end of conduit.
2. Tape detector conductors or cables 3" each side of bushings.
3. Install duct seal compound to each end of termination conduit before installing sealant.
4. Round all sharp edges where detector conductors or cables have to pass.
5. End of conduit shall be 3⅛" below roadway surface.
6. Conduit size / Loop conductors
   - 1"C minimum — 1 to 2 pairs
   - 1½"C minimum — 3 to 4 pairs
   - 2"C minimum — 5 or more pairs
7. Splice detector conductors or cables to detector lead-in-cable.
8. Location of detector handhole when shown on plans.
9. When the shoulder and traveled way are paved with the same material and there is no joint between them, the conduit shall extend only 2'-0" into the shoulder pavement.
10. ¾"C, Type 3 conduit 6" long minimum, plug both ends with duct compound to keep out sealant.
11. ½" Minimum between top of conduit and pavement surface.
12. Sawcut shall not exceed 1" in width and ⅛" longer than conduit to be installed.
13. Conductors with ½" minimum slack inside conduit.
14. Inductive loop detector saw slot.

STATE OF CALIFORNIA
DEPARTMENT OF TRANSPORTATION

ELECTRICAL SYSTEMS (CURB TERMINATION AND HANDHOLE)

NO SCALE

RSP ES-5D DATED JULY 19, 2013 SUPERSEDES STANDARD PLAN ES-5D DATED MAY 20, 2011 - PAGE 451 OF THE STANDARD PLANS BOOK DATED 2010.

REVISED STANDARD PLAN RSP ES-5D

2010 REVISED STANDARD PLAN RSP ES-5D

7-9-13

Dist	COUNTY	ROUTE	POST MILES TOTAL PROJECT	SHEET No.	TOTAL SHEETS
11	Imp, SD	5,7,8,15, 52,etc.	Var	56	59

REGISTERED CIVIL ENGINEER

July 19, 2013
PLANS APPROVAL DATE

REGISTERED PROFESSIONAL ENGINEER
Stanley P. Johnson
No. C57793
Exp. 3-31-14
CIVIL
STATE OF CALIFORNIA

THE STATE OF CALIFORNIA OR ITS OFFICERS OR AGENTS SHALL NOT BE RESPONSIBLE FOR THE ACCURACY OR COMPLETENESS OF SCANNED COPIES OF THIS PLAN SHEET.

TO ACCOMPANY PLANS DATED 10-12-15

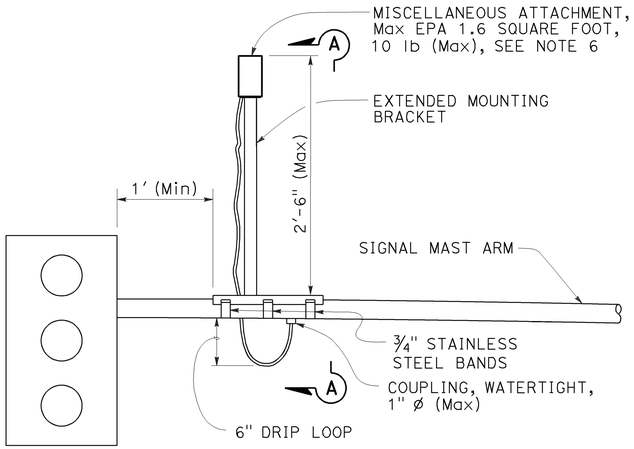

SIGNAL MAST ARM MOUNT

DETAIL A

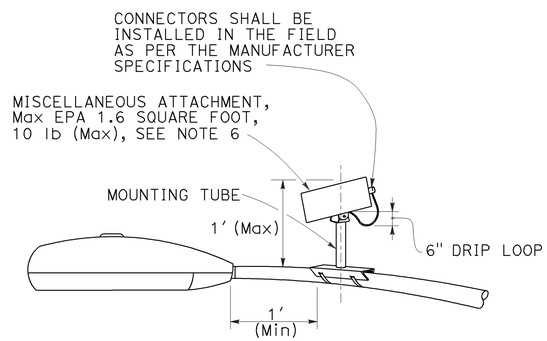

LUMINAIRE MAST ARM MOUNT

DETAIL B

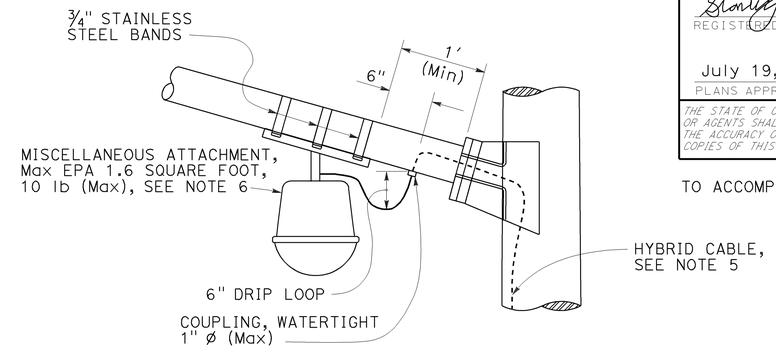

LUMINAIRE MAST ARM MOUNT

DETAIL C

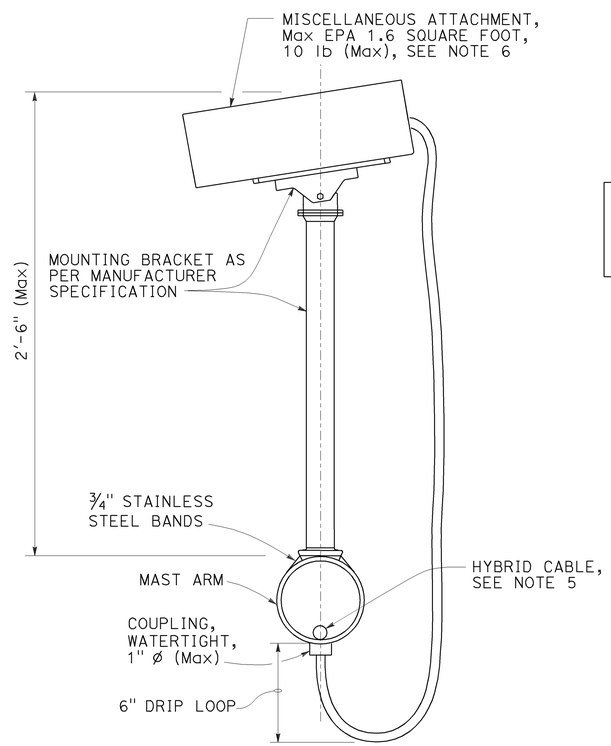

SECTION A-A

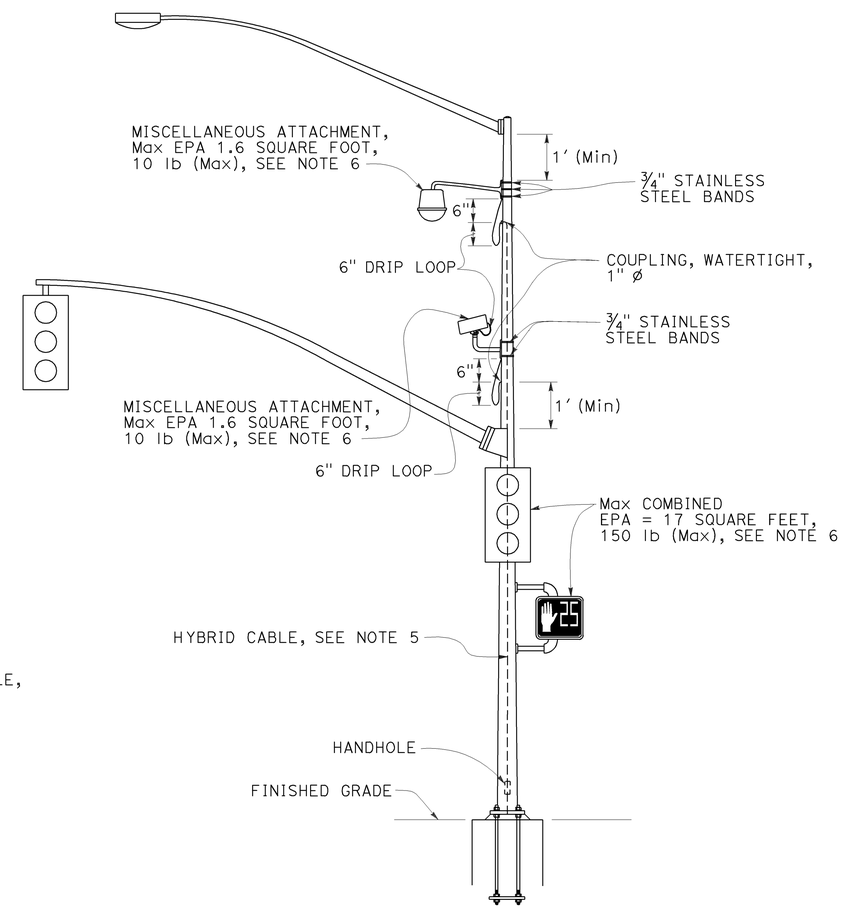

SIGNAL POLE MOUNT

DETAIL D

NOTES:

1. Exact mounting location of miscellaneous attachment and bracket shall be approved by the Engineer per manufacturer's recommendation.
2. Location of cable entrances on signal pole shall be a minimum of 1′ from any flange or base plate.
3. Hybrid cable entrances on signal pole shall be drilled for weathertight coupling as required.
4. Hybrid cable shall have a drip loop at the entrance into signal pole, luminaire mast arm and signal mast arm.
5. A single hybrid cable shall run continuous and shall not be twisted from the miscellaneous attachment to the controller cabinet. No splices shall be allowed.
6. Use the manufacturer's Effective Projected Area (EPA) for miscellaneous attachment. The maximum EPA for each miscellaneous attachment shall be 1.6 square feet.
7. Maximum of two miscellaneous attachments per traffic signal structure.
8. Maximum of one miscellaneous attachment per mast arm.
9. Miscellaneous attachment shall be mounted using clamping devices.

STATE OF CALIFORNIA
DEPARTMENT OF TRANSPORTATION

ELECTRICAL SYSTEMS (SIGNAL AND LIGHTING, MISCELLANEOUS ATTACHMENT)

NO SCALE

RSP ES-7R DATED JULY 19, 2013 SUPERSEDES STANDARD PLAN ES-7R
DATED MAY 20, 2011 - PAGE 479 OF THE STANDARD PLANS BOOK DATED 2010.

REVISED STANDARD PLAN RSP ES-7R

2010 REVISED STANDARD PLAN RSP ES-7R

6-17-13

DIST	COUNTY	ROUTE	POST MILES TOTAL PROJECT	SHEET NO.	TOTAL SHEETS
11	Imp, SD	5,7,8,15, 52, etc.	Var	57	59

Theresa Gabriel
REGISTERED ELECTRICAL ENGINEER

July 19, 2013
PLANS APPROVAL DATE

REGISTERED PROFESSIONAL ENGINEER Theresa Aziz Gabriel No. E15129 Exp. 6-30-14 ELECTRICAL STATE OF CALIFORNIA

THE STATE OF CALIFORNIA OR ITS OFFICERS OR AGENTS SHALL NOT BE RESPONSIBLE FOR THE ACCURACY OR COMPLETENESS OF SCANNED COPIES OF THIS PLAN SHEET.

TO ACCOMPANY PLANS DATED 10-12-15

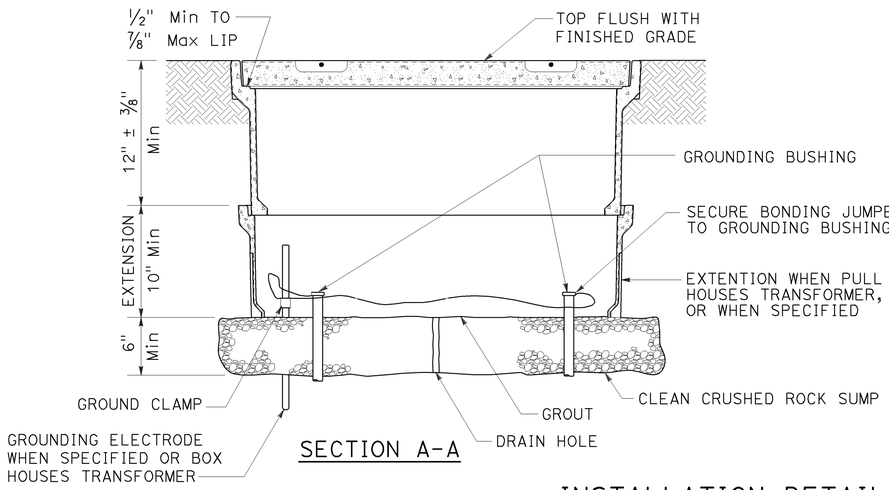

SECTION A-A

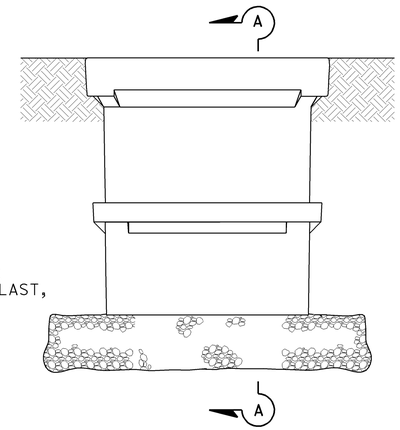

SIDE VIEW

INSTALLATION DETAILS

DETAIL A

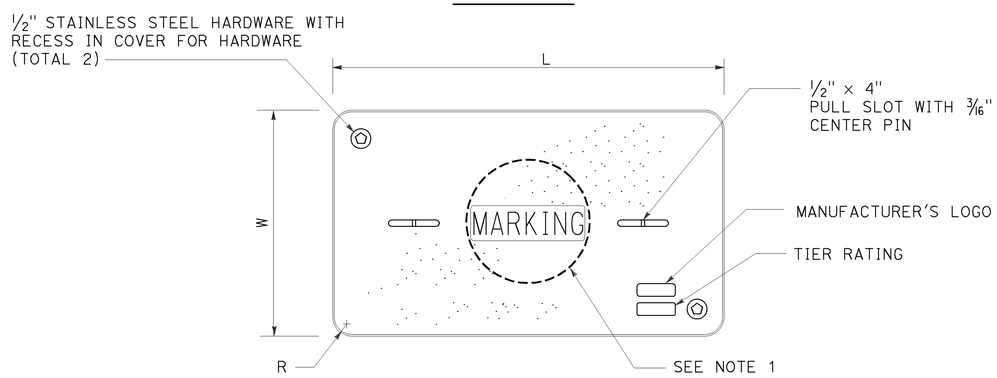

COVER TOP VIEW

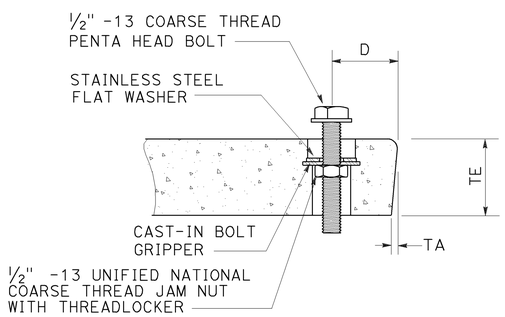

TYPICAL COVER CAPTIVE BOLT

OR SIMILAR

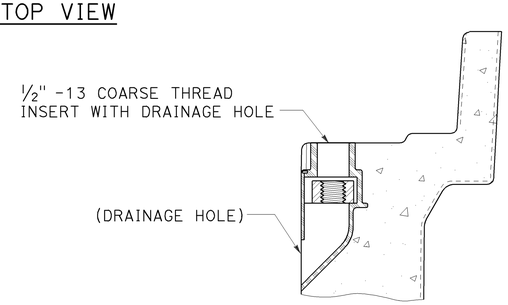

TYPICAL THREADED INSERT

OR SIMILAR

DIMENSION TABLE

PULL BOX	PULL BOX			COVER						
	MINIMUM DEPTH BOX	MINIMUM DEPTH EXTENSION	MAXIMUM WEIGHT	L	W	R	TE	TA	D	MAXIMUM WEIGHT
No. 3½	12"	N/A	40 lb	1′ - 3⅜"	10⅛"	1⅜"	2"	⅛"	1¾"	30 lb
No. 5	12"	10"	55 lb	1′ - 11¼"	1′ - 1¾"	1⅜"	2"	⅛"	1¾"	60 lb
No. 6	12"	10"	70 lb	2′ - 6½"	1′ - 5½"	1⅜"	2"	⅛"	2"	85 lb

NOTES:

1. Pull box covers shall be marked as follows: "SERVICE" Service circuits between service point and service disconnect; "SPRINKLER-CONTROL" sprinkler control circuits, 50 V or less; "CALTRANS" on all pull boxes, except pull boxes marked "SPRINKLER-CONTROL"; and "TELEPHONE" Telephone service;

   A) No. 3½ pull box.
      1) "SIGNAL" - Traffic signal circuits with or without lighting or sign lighting circuits.
      2) "LIGHTING" - Lighting or sign lighting circuits where voltage is under 600 V.

   B) No. 5, 6, 9 or 9A pull box.
      1) "TRAFFIC SIGNAL" - Traffic signal circuits with or without lighting or sign lighting circuits.
      2) "LIGHTING" - Lighting or sign lighting circuits where voltage is under 600 V.
      3) "LIGHTING-HIGH VOLTAGE" - Lighting or sign lighting circuits where voltage is above 600 V.
      4) "IRRIGATION" - Circuits to irrigation controller 120 V or more.
      5) "RAMP METER" - Ramp meter circuits.
      6) "COUNT STATION" - Count or speed monitor circuits.
      7) "COMMUNICATIONS" - Communication circuits.
      8) "TOS COMMUNICATIONS" - TOS communication line.
      9) "TOS POWER" - TOS power.
      10) "TDC POWER" - Telephone demarcation cabinet power.
      11) "CCTV" - Closed circuit television circuits.
      12) "TMS" - Traffic monitoring station circuits.
      13) "CMS" - Changeable message sign circuits.
      14) "HAR" - Highway advisory radio circuits.
      15) "BOOSTER PUMP" - Booster pump circuit.

2. The nominal dimensions of the opening in which the cover sets shall be the same as the cover dimensions except the length and width dimensions shall be ⅛" greater.

3. Covers and boxes shall be interchangeable with California standard male and female gages. When interchanged with a standard male or female gage, the top surfaces shall be flush within ⅛". Top outside radius of covers and pull boxes shall have a ⅛" radius.

4. Pull box extension may be another pull box as long as the bottom edge of the pull box can fit into the cover opening.

5. All dimensions for the cover for non-traffic pull box are nominal values.

STATE OF CALIFORNIA
DEPARTMENT OF TRANSPORTATION

ELECTRICAL SYSTEMS (NON-TRAFFIC PULL BOX)

NO SCALE

RSP ES-8A DATED JULY 19, 2013 SUPERSEDES RSP ES-8A DATED JANUARY 20, 2012 THAT SUPPLEMENTS THE STANDARD PLANS BOOK DATED 2010.

REVISED STANDARD PLAN RSP ES-8A

2010 REVISED STANDARD PLAN RSP ES-8A

7-15-13

DIST	COUNTY	ROUTE	POST MILES TOTAL PROJECT	SHEET NO.	TOTAL SHEETS
11	Imp, SD	5,7,8,15, 52, etc.	Var	58	59

Theresa Gabriel
REGISTERED ELECTRICAL ENGINEER

July 19, 2013
PLANS APPROVAL DATE

REGISTERED PROFESSIONAL ENGINEER
Theresa Aziz Gabriel
No. E15129
Exp. 6-30-14
ELECTRICAL
STATE OF CALIFORNIA

THE STATE OF CALIFORNIA OR ITS OFFICERS OR AGENTS SHALL NOT BE RESPONSIBLE FOR THE ACCURACY OR COMPLETENESS OF SCANNED COPIES OF THIS PLAN SHEET.

TO ACCOMPANY PLANS DATED 10-12-15

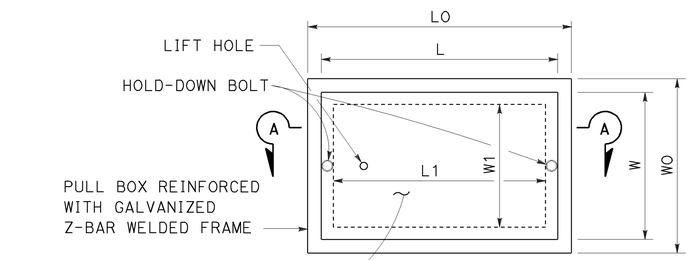

TOP VIEW

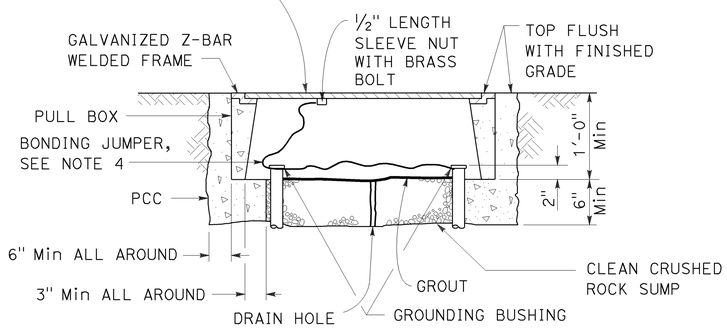

SECTION A-A

No. 3½(T), No. 5(T) AND No. 6(T) TRAFFIC PULL BOX

NOTES:

1. Traffic pull box shall be provided with steel cover and special concrete footing. Steel cover shall have embossed non-skid pattern.
2. Steel reinforcing shall be as regularly used in the standard products of the respective manufacturer.
3. Pull box covers shall be marked as follows: "SERVICE" Service circuits between service point and service disconnect; "SPRINKLER-CONTROL" Sprinkler control circuits, 50 V or less; "CALTRANS" On all pull boxes, except pull boxes marked "SPRINKLER-CONTROL"; and "TELEPHONE" Telephone service.
   A) No. 3½(T) pull box.
      1) "SIGNAL" - Traffic signal circuits with or without lighting or sign lighting circuits.
      2) "LIGHTING" - Lighting or sign lighting circuits where voltage is under 600 V.
   B) No. 5(T) or 6(T) pull box.
      1) "TRAFFIC SIGNAL" - Traffic signal circuits with or without lighting or sign lighting circuits.
      2) "LIGHTING" - Lighting or sign lighting circuits where voltage is under 600 V.
      3) "LIGHTING-HIGH VOLTAGE" - Lighting or sign lighting circuits where voltage is above 600 V.
      4) "IRRIGATION" - Circuits to irrigation controller 120 V or more.
      5) "RAMP METER" - Ramp meter circuits.
      6) "COUNT STATION" - Count or speed monitor circuits.
      7) "COMMUNICATION" - Communication circuits.
      8) "TOS COMMUNICATIONS" - TOS communications line.
      9) "TOS POWER" - TOS power.
      10) "TDC POWER" - Telephone demarcation cabinet power.
      11) "CCTV" - Closed circuit television circuits.
      12) "TMS" - Traffic monitoring station circuits.
      13) "CMS" - Changeable message sign circuits.
      14) "HAR" - Highway advisory radio circuits.
      15) "BOOSTER PUMP" - Booster pump circuit.
4. Bonding jumper for metal covers shall be 3' long, minimum.
5. The nominal dimensions of the opening in which the cover sets shall be the same as the cover dimensions except the length and width dimensions shall be ⅛" greater.
6. Covers and boxes shall be interchangeable with California standard male and female gages. When interchanged with a standard male or female gage, the top surfaces shall be flush within ⅛".

DIMENSION TABLE

PULL BOX	PULL BOX						COVER				
	MINIMUM * THICKNESS	MINIMUM DEPTH BOX AND EXTENSION	WO	LO	L1	W1	L **	W **	R	EDGE THICKNESS	EDGE TAPER
No. 3½(T)	1½"	1'-0"	1'-5"± 1"	1'-8⅞"±	1'-2½"±	10⅝"± 1"	1'-8"±	1'-1¾"±	0"	½"	NONE
No. 5(T)	1¾"	1'-0"	1'-11½"± 1"	2'-5½"±	1'-7"±	1'-1"± 1"	2'-3"±	1'-4"±	0"	½"	NONE
No. 6(T)	2"	1'-0"	2'-6"± 1"	2'-11½"±	1'-11½"±	1'-5"± 1"	2'-9"±	1'-8"±	0"	½"	NONE

* EXCLUDING CONDUIT WEB ** TOP DIMENSION

STATE OF CALIFORNIA
DEPARTMENT OF TRANSPORTATION

ELECTRICAL SYSTEMS (TRAFFIC PULL BOX)

NO SCALE

RSP ES-8B DATED JULY 19, 2013 SUPERSEDES RSP ES-8B DATED JANUARY 20, 2012 THAT SUPPLEMENTS THE STANDARD PLANS BOOK DATED 2010.

REVISED STANDARD PLAN RSP ES-8B

2010 REVISED STANDARD PLAN RSP ES-8B

Dist	COUNTY	ROUTE	POST MILES TOTAL PROJECT	SHEET No.	TOTAL SHEETS
11	Imp, SD	5,7,8,15, 52,etc.	Var	59	59

REGISTERED CIVIL ENGINEER

November 15, 2013
PLANS APPROVAL DATE

REGISTERED PROFESSIONAL ENGINEER
Stanley P. Johnson
No. C57793
Exp. 3-31-14
CIVIL
STATE OF CALIFORNIA

THE STATE OF CALIFORNIA OR ITS OFFICERS OR AGENTS SHALL NOT BE RESPONSIBLE FOR THE ACCURACY OR COMPLETENESS OF SCANNED COPIES OF THIS PLAN SHEET.

TO ACCOMPANY PLANS DATED 10-12-15

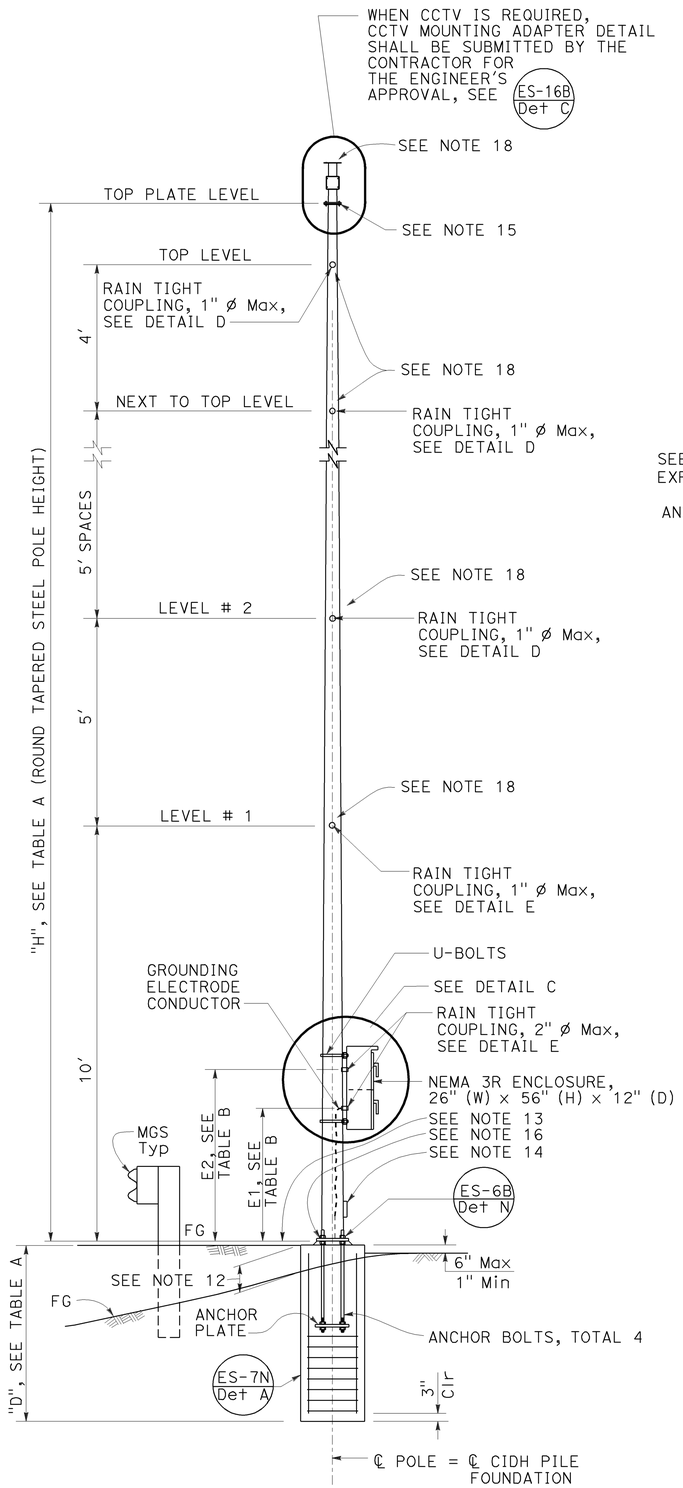

ELEVATION A

TABLE A

POLE TYPE	POLE DATA: HEIGHT "H"	Min OD BASE	Min OD TOP	THICKNESS	BASE PLATE DATA: "C"	THICKNESS	ANCHOR BOLTS SIZE	BC = BOLT CIRCLE	"D" 2'-6" ø CIDH Pile: LEVEL GROUND	UP TO 2:1
VDS 30	30'	8"	3⅞"	0.1793"	1'-1½"	1½"	1½" ø x 3'-0"	1'-1½"	11'-0"	13'-0"
VDS 35	35'	8⅝"			1'-2"			1'-2"	11'-0"	
VDS 40	40'	9⅜"			1'-3"			1'-3"	12'-0"	14'-0"

TABLE B

POLE TYPE	COUPLING E1(Max)	COUPLING E2(Max)
VDS 30	3'-6"	4'-9"
VDS 35		
VDS 40		

TABLE C

SPREAD FOOTING		
GROUND	FOOTING SIZE (LENGTH x WIDTH x DEPTH)	REINFORCEMENT TOP & BOTTOM
LEVEL	8'-6" x 8'-6" x 2'-0"	12 - #5 EW
UP TO 2:1	10'-0" x 10'-0" x 2'-0"	15 - #5 EW

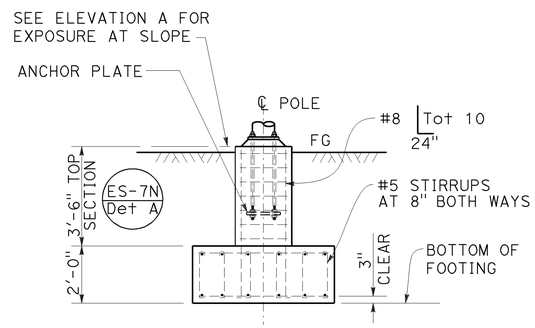

ALTERNATIVE FOOTING
ELEVATION B

TABLE D - LIMITATION ON ATTACHMENTS *

LOCATION	MAXIMUM TOTAL EPA PER LEVEL (SQUARE FEET)	MAXIMUM TOTAL WEIGHT (lb)
LEVEL #1	14	200
LEVEL #2		
LEVEL #3	10 ***	
LEVEL #4 (VDS 35 AND VDS 40 ONLY)	2.5	50
LEVEL #5 (VDS 40 ONLY)		
NEXT TO TOP LEVEL		
TOP LEVEL		
ON TOP PLATE LEVEL **		

* MAXIMUM HORIZONTAL EXTENT BEYOND POLE FACE IS 4 FEET.
** MAXIMUM EXTENT ABOVE TOP PLATE IS 3 FEET.
*** 14 IF LEVEL #1 IS ZERO.

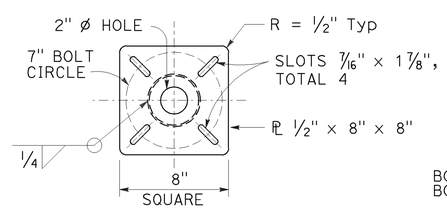

TOP PLATE
DETAIL A

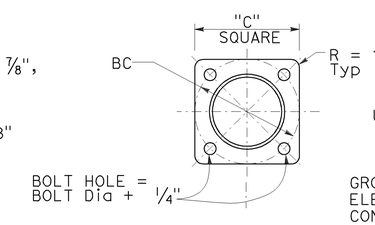

BASE PLATE
DETAIL B

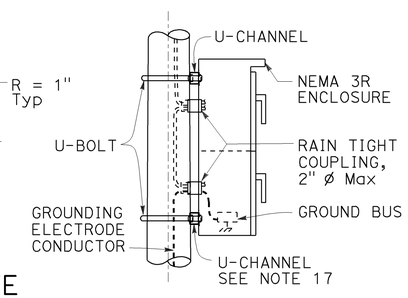

DETAIL C

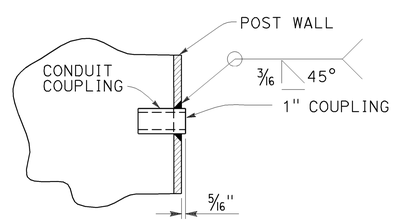

1" COUPLING
DETAIL D

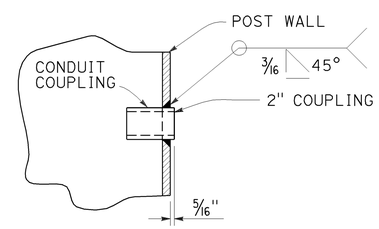

2" COUPLING
DETAIL E

NOTES:

1. All steel shall be galvanized after fabrication.
2. During pole installation the post shall be raked as necessary with the use of leveling nuts to provide a plumb pole axis.
3. The foundation shall be treated as level ground condition if the slope inclination is flatter than 4 : 1 (Horizontal : Vertical)
4. For devices mounted and mounting heights, see TABLE B.
5. Design Specification: AASHTO Standard Specification for structural support for highway signs, luminaires and traffic signal dated 2001.
6. Wind Loadings: 100 mph (3-second gust)
7. Unit Stresses (Structural Steel):
   a. fy = 55,000 psi (tapered steel tube)
   b. fy = 50,000 psi (unless otherwise noted)
8. Anchor bolts: fy = 55,000 psi
9. Unit Stresses (Reinforced Concrete):
   a. f'c = 3,600 psi
   b. fy = 60,000 psi
10. The Contractor shall verify all controlling field dimensions before ordering of fabricating any material.
11. When no barriers are used, the NEMA 3R enclosure shall be located on the downstream side and perpendicular to the roadway.
12. 1'-3" (Max) for sloped finished grade.
13. Bottom of base plate.
14. Handhole. ES-7M Det B / ES-7M Det A
15. Top plate.
    Install a blank flange on the top plate when closed circuit television is not used.
16. ES-7O Elev B
17. U-channel with bracket.
18. Use the manufacturer's Effective Projected Area (EPA) for attachments. Assign attachments to nearest level and sum each level, see Table D for limitations.

STATE OF CALIFORNIA
DEPARTMENT OF TRANSPORTATION

ELECTRICAL SYSTEMS (CLOSED CIRCUIT TELEVISION WITH VEHICLE DETECTION SYSTEM, 30' TO 40' POLE)

NO SCALE

RSP ES-16D DATED NOVEMBER 15, 2013 SUPERSEDES RSP ES-16D DATED JULY 19, 2013 AND STANDARD PLAN ES-16D DATED MAY 20, 2011 - PAGE 503 OF THE STANDARD PLANS BOOK DATED 2010.

REVISED STANDARD PLAN RSP ES-16D

2010 REVISED STANDARD PLAN RSP ES-16D

10-4-13