Dist	COUNTY	ROUTE	POST MILES TOTAL PROJECT	SHEET No.	TOTAL SHEETS
11	SD	5,52	R25.5/R26.3 0.0/0.6	2	40

REGISTERED CIVIL ENGINEER 04-01-16 DATE

04-04-16
PLANS APPROVAL DATE

REGISTERED PROFESSIONAL ENGINEER J. ALBERTO CANIZAL No. C70115 Exp. 09-30-16 CIVIL STATE OF CALIFORNIA

THE STATE OF CALIFORNIA OR ITS OFFICERS OR AGENTS SHALL NOT BE RESPONSIBLE FOR THE ACCURACY OR COMPLETENESS OF SCANNED COPIES OF THIS PLAN SHEET.

NOTES:

1. DIMENSIONS OF THE PAVEMENT STRUCTURES (STRUCTURAL SECTIONS) ARE SUBJECT TO TOLERANCES SPECIFIED IN THE STANDARD SPECIFICATIONS.
2. (*) = MATCH EXISTING.
3. APPLY FOG SEAL AT AC DIKES AND GORE AREAS.

ABBREVIATION:

RHMA-G RUBBERIZED HOT MIXED ASPHALT (GAP GRADED)
LCB LEAN CONCRETE BASE
HMA-A HOT MIX ASPHALT-TYPE A

PAVEMENT CLIMATE REGION: SOUTH COAST

DESIGN DESIGNATION

NB5 TO LA JOLLA PARKWAY OFF-RAMP

ADT (2016)	9,820	D	NA
ADT (2026)	10,580	T	4.1%
DHV	1,010	TI_{20}	10
ESAL	2,601,000		

LA JOLLA PARKWAY TO SB5 ON-RAMP
WB52 - SB5 CONNECTOR

ADT (2016)	22,170	D	NA
ADT (2026)	23,460	T	4.1%
DHV	2,200	TI_{20}	10.5
ESAL	3,634,300		

NB5 - EB 52 CONNECTOR

ADT (2016)	12,140	D	NA
ADT (2026)	12,990	T	4.1%
DHV	1,230	TI_{20}	10.5
ESAL	3,136,600		

WB 52 - NB5 CONNECTOR

ADT (2016)	13,610	D	NA
ADT (2026)	14,710	T	4.1%
DHV	1,730	TI_{20}	10.5
ESAL	3,606,100		

SB5 - EB 52 CONNECTOR

ADT (2016)	14,650	D	NA
ADT (2026)	15,880	T	4.1%
DHV	2,330	TI_{20}	10.5
ESAL	3,937,300		

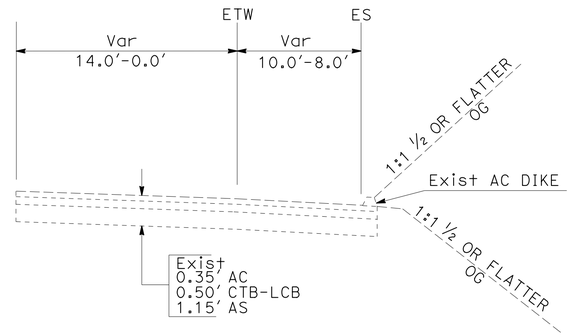

LOCATION 1
WB52

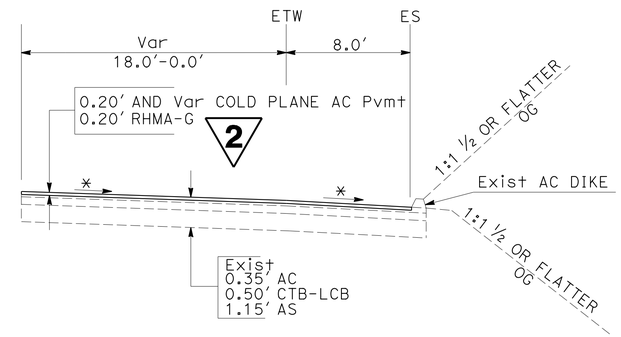

LOCATION 2
NB5

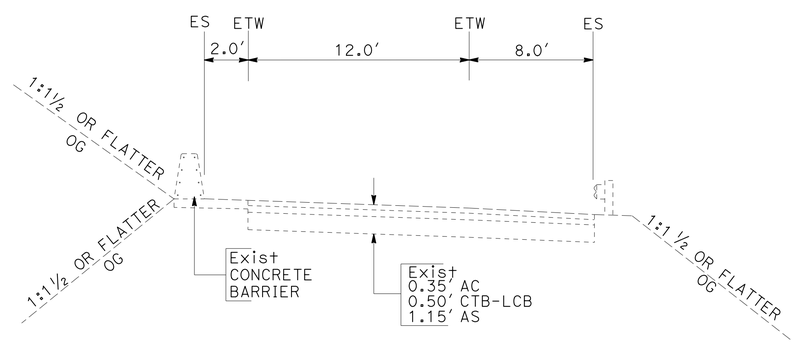

LOCATION 1
WB52 - NB5 CONNECTOR

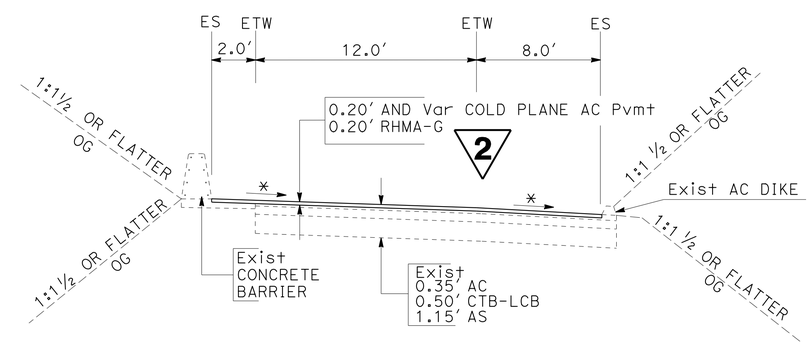

LOCATION 2
WB52 - NB5 CONNECTOR

2 REPLACED PER ADDENDUM No. 2 DATED May 20 , 2016

TYPICAL CROSS SECTIONS

X-1

NO SCALE

STATE OF CALIFORNIA - DEPARTMENT OF TRANSPORTATION
Caltrans® **MAINTENANCE**

FUNCTIONAL SUPERVISOR: LAURA ESPINOZA
CALCULATED-DESIGNED BY: BASOZ GHAZI
CHECKED BY: ALBERTO CANIZAL
REVISED BY
DATE REVISED

LAST REVISION 04-04-16
DATE PLOTTED => 19-MAY-2016
TIME PLOTTED => 11:28

Dist	COUNTY	ROUTE	POST MILES TOTAL PROJECT	SHEET No.	TOTAL SHEETS
11	SD	5,52	R25.5/R26.3 0.0/0.6	3	40

REGISTERED CIVIL ENGINEER 04-01-16 DATE

04-04-16
PLANS APPROVAL DATE

REGISTERED PROFESSIONAL ENGINEER J. ALBERTO CANIZAL No. C70115 Exp. 09-30-16 CIVIL STATE OF CALIFORNIA

THE STATE OF CALIFORNIA OR ITS OFFICERS OR AGENTS SHALL NOT BE RESPONSIBLE FOR THE ACCURACY OR COMPLETENESS OF SCANNED COPIES OF THIS PLAN SHEET.

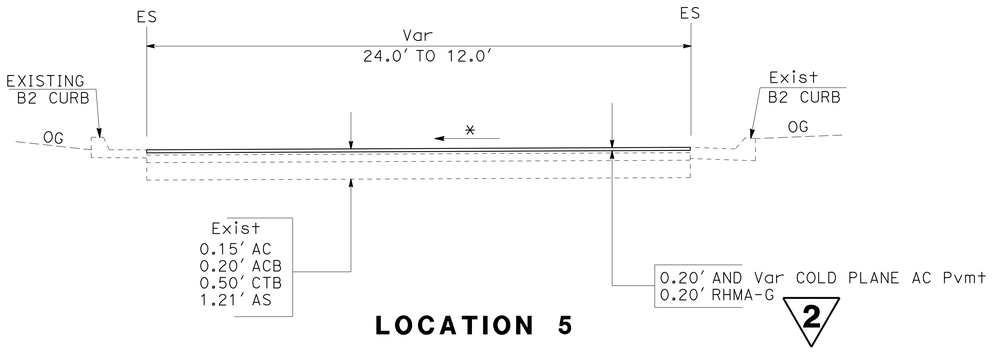

LOCATION 5
WB52 - SB5 CONNECTOR

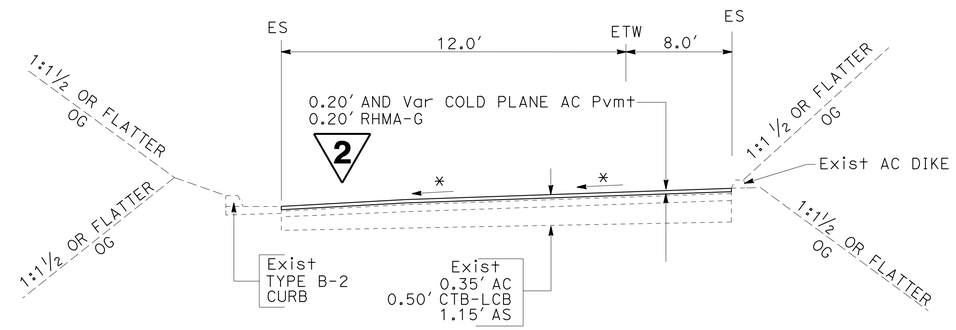

LOCATION 7
SB5 - EB52 CONNECTOR

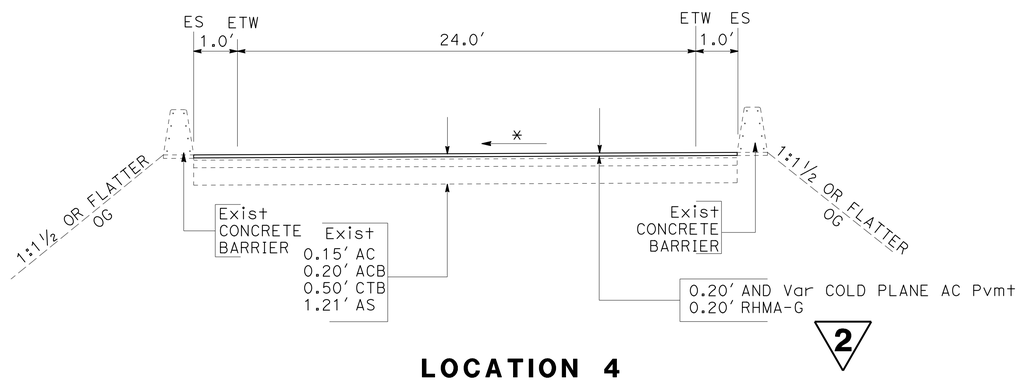

LOCATION 4
WB52 - SB5 CONNECTOR

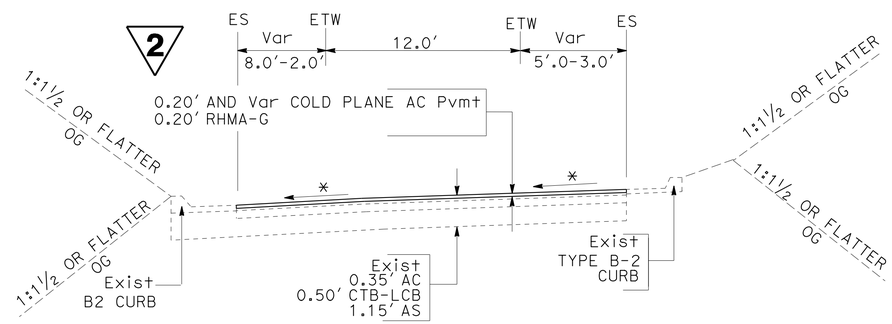

LOCATION 6
LA JOLLA PARKWAY TO EB 52 ON-RAMP

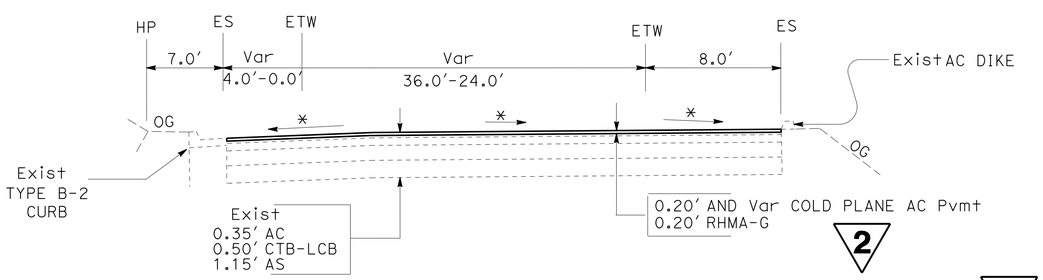

LOCATION 3
WB52 TO LA JOLLA PARKWAY OFF-RAMP

2 **REPLACED PER ADDENDUM No. 2 DATED May 20, 2016**

TYPICAL CROSS SECTIONS

NO SCALE

X-2

STATE OF CALIFORNIA - DEPARTMENT OF TRANSPORTATION
Caltrans® **MAINTENANCE**

FUNCTIONAL SUPERVISOR: LAURA ESPINOZA
CALCULATED-DESIGNED BY: BASOZ GHAZI
CHECKED BY: ALBERTO CANIZAL
REVISED BY
DATE REVISED

LAST REVISION 04-04-16
DATE PLOTTED => 19-MAY-2016
TIME PLOTTED => 11:28

Dist	COUNTY	ROUTE	POST MILES TOTAL PROJECT	SHEET No.	TOTAL SHEETS
11	SD	5,52	R25.5/R26.3 0.0/0.6	4	40

REGISTERED CIVIL ENGINEER 04-01-16 DATE

04-04-16
PLANS APPROVAL DATE

REGISTERED PROFESSIONAL ENGINEER J. ALBERTO CANIZAL No. C70115 Exp. 09-30-16 CIVIL STATE OF CALIFORNIA

THE STATE OF CALIFORNIA OR ITS OFFICERS OR AGENTS SHALL NOT BE RESPONSIBLE FOR THE ACCURACY OR COMPLETENESS OF SCANNED COPIES OF THIS PLAN SHEET.

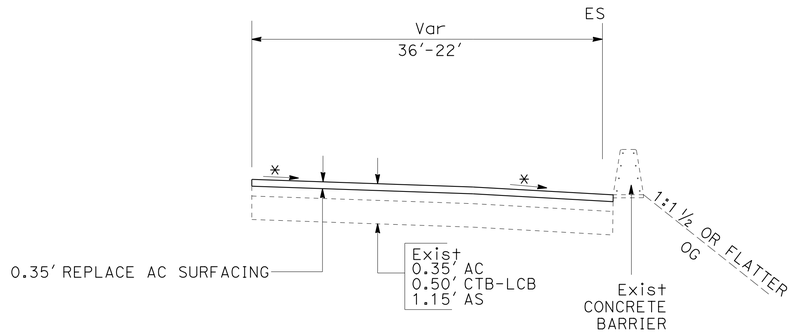

LOCATION 10
NB5 - EB52 CONNECTOR

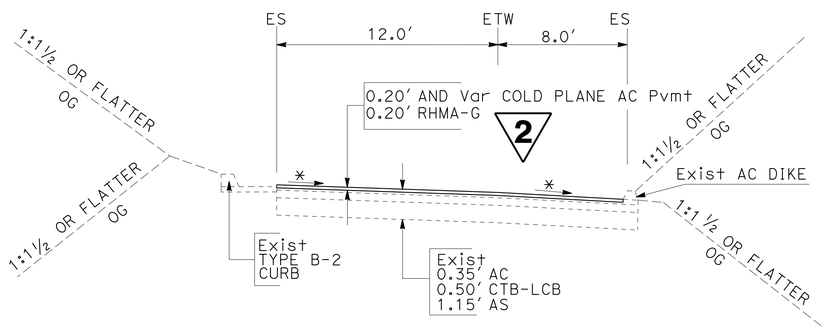

LOCATION 9
NB5 - EB52 CONNECTOR

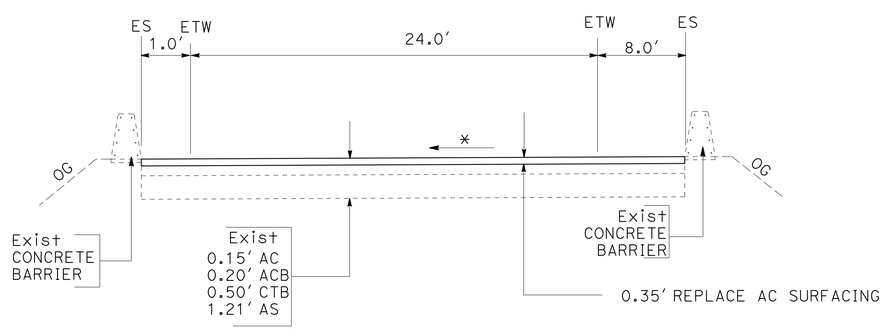

LOCATION 8
SB5 - EB52 CONNECTOR

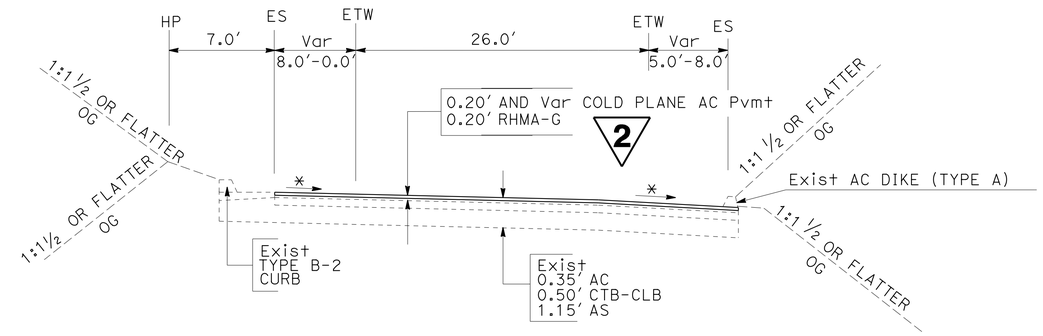

LOCATION 12
LA JOLLA PARKWAY (SR-52)

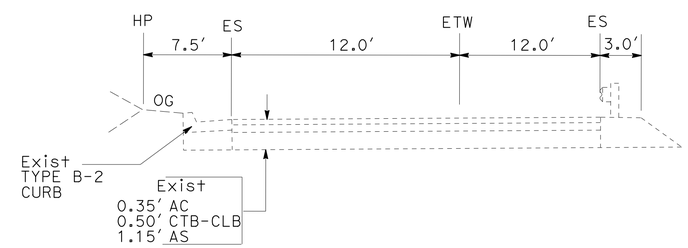

LOCATION 11
NB5 TO LA JOLLA PARKWAY OFF-RAMP

2 REPLACED PER ADDENDUM No. 2 DATED May 20, 2016

TYPICAL CROSS SECTIONS

NO SCALE

X-3

STATE OF CALIFORNIA - DEPARTMENT OF TRANSPORTATION
Caltrans® MAINTENANCE

FUNCTIONAL SUPERVISOR: LAURA ESPINOZA
CALCULATED-DESIGNED BY: BASOZ GHAZI
CHECKED BY: ALBERTO CANIZAL
REVISED BY
DATE REVISED

LAST REVISION 04-04-16 | DATE PLOTTED => 19-MAY-2016 | TIME PLOTTED => 11:28

Dist	COUNTY	ROUTE	POST MILES TOTAL PROJECT	SHEET No.	TOTAL SHEETS
11	SD	5,52	R25.5/R26.3 0.0/0.6	5	40

REGISTERED CIVIL ENGINEER 04-01-16 DATE

04-04-16
PLANS APPROVAL DATE

REGISTERED PROFESSIONAL ENGINEER
J. ALBERTO CANIZAL
No. C70115
Exp. 09-30-16
CIVIL
STATE OF CALIFORNIA

THE STATE OF CALIFORNIA OR ITS OFFICERS OR AGENTS SHALL NOT BE RESPONSIBLE FOR THE ACCURACY OR COMPLETENESS OF SCANNED COPIES OF THIS PLAN SHEET.

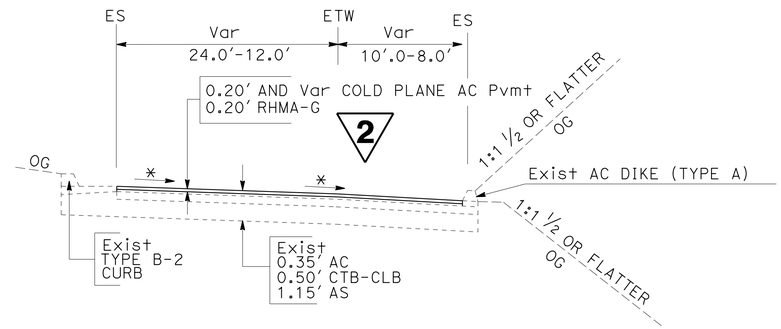

LOCATION 14

SB 5

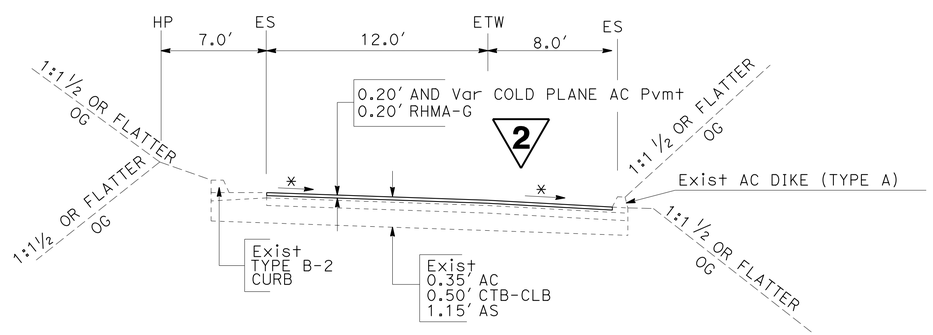

LOCATION 13

LA JOLLA PARKWAY TO SB 5 ON-RAMP

2 REPLACED PER ADDENDUM No. 2 DATED May 20, 2016

TYPICAL CROSS SECTIONS

NO SCALE

X-4

STATE OF CALIFORNIA - DEPARTMENT OF TRANSPORTATION
Caltrans® **MAINTENANCE**

FUNCTIONAL SUPERVISOR: LAURA ESPINOZA
CALCULATED-DESIGNED BY: BASOZ GHAZI
CHECKED BY: ALBERTO CANIZAL
REVISED BY
DATE REVISED

LAST REVISION 04-04-16
DATE PLOTTED => 19-MAY-2016
TIME PLOTTED => 11:28