14-5 EXAMPLE SEISMIC RETROFIT DETAILS

Memo to Designers (MTD) 20-4 established the policies, procedures and guidelines used by Caltrans for seismic retrofit. The primary purpose of this Bridge Design Aid is to assist the engineer in implementing those policies and procedures by providing the following example details. However, the engineer is cautioned that these example details are intended for illustration purposes, and significant modification may be required in order to meet the performance standard specified in MTD 20-4.

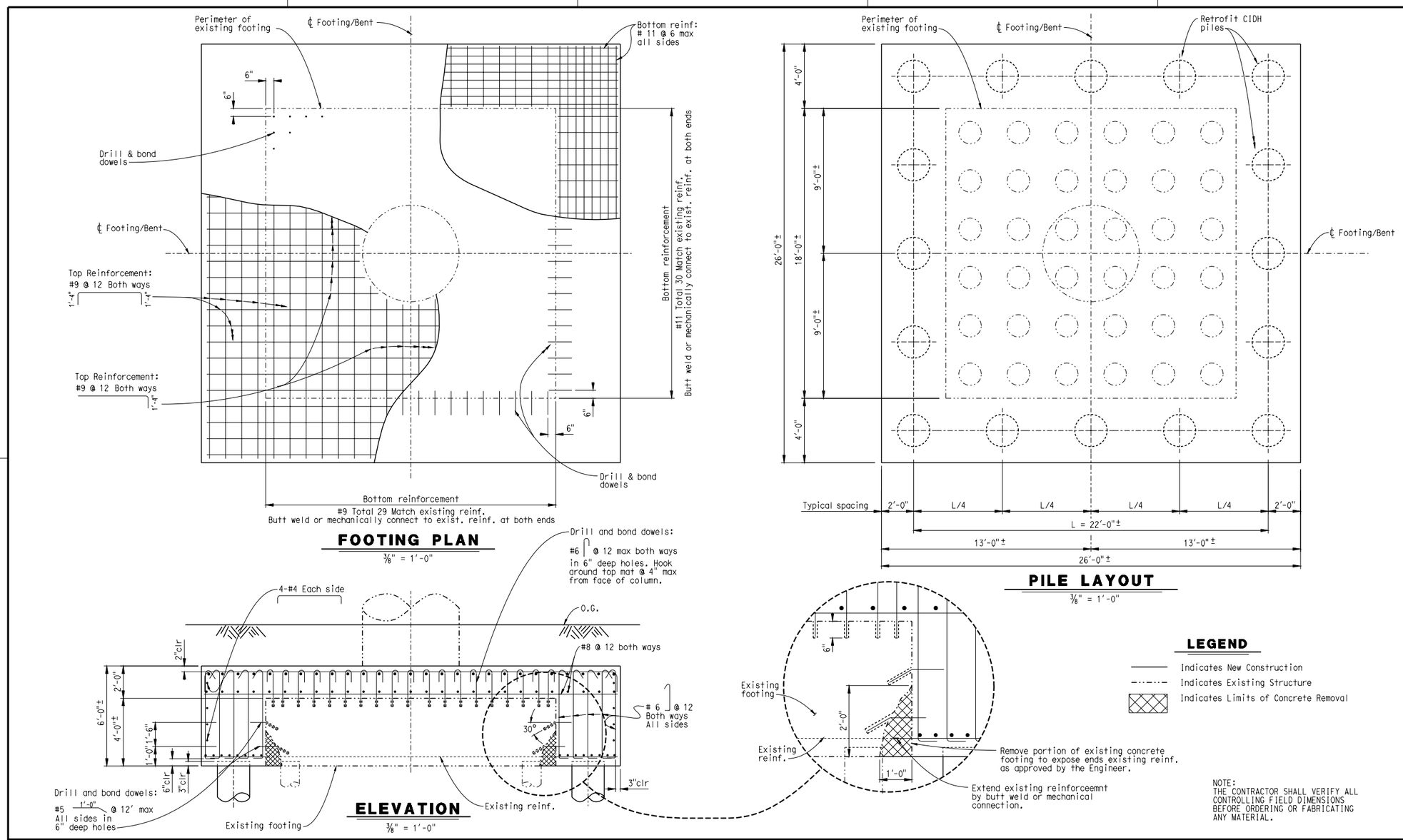
Perimeter of existing footing
℄ Footing/Bent
Bottom reinf: # 11 @ 6 max all sides
6"
6"
Drill & bond dowels
℄ Footing/Bent
Top Reinforcement: #9 @ 12 Both ways
1'-4"
1'-4"
Top Reinforcement: #9 @ 12 Both ways
1'-4"
Bottom reinforcement
#11 Total 30 Match existing reinf.
Butt weld or mechanically connect to exist. reinf. at both ends
6"
6"
Drill & bond dowels
Bottom reinforcement
#9 Total 29 Match existing reinf.
Butt weld or mechanically connect to exist. reinf. at both ends
FOOTING PLAN
3/8" = 1'-0"
Perimeter of existing footing
℄ Footing/Bent
Retrofit CIDH piles
4'-0"
9'-0"±
9'-0"±
4'-0"
26'-0"±
18'-0"±
℄ Footing/Bent
Typical spacing
2'-0"
L/4
L/4
L/4
L/4
2'-0"
L = 22'-0"±
13'-0"±
13'-0"±
26'-0"±
PILE LAYOUT
3/8" = 1'-0"
Drill and bond dowels:
#6 @ 12 max both ways
in 6" deep holes. Hook around top mat @ 4" max from face of column.
4-#4 Each side
O.G.
#8 @ 12 both ways
2"clr
2'-0"
6'-0"±
4'-0"±
1'-6"
1'-0"
6"clr
3"clr
6 @ 12 Both ways All sides
30°
3"clr
Drill and bond dowels:
#5 1'-0" @ 12' max
All sides in 6" deep holes
Existing footing
Existing reinf.
ELEVATION
3/8" = 1'-0"
6"
Existing footing
2'-0"
Existing reinf.
1'-0"
Remove portion of existing concrete footing to expose ends existing reinf. as approved by the Engineer.
Extend existing reinforceemnt by butt weld or mechanical connection.
LEGEND
Indicates New Construction
Indicates Existing Structure
Indicates Limits of Concrete Removal
NOTE:
THE CONTRACTOR SHALL VERIFY ALL CONTROLLING FIELD DIMENSIONS BEFORE ORDERING OR FABRICATING ANY MATERIAL.
These details are for example purposes only.
Details must be adjusted for specific projects.
STATE OF
CALIFORNIA
DEPARTMENT OF TRANSPORTATION
EXAMPLE FOOTING RETROFIT
FILE => cidh-ftg_retrofit.dgn

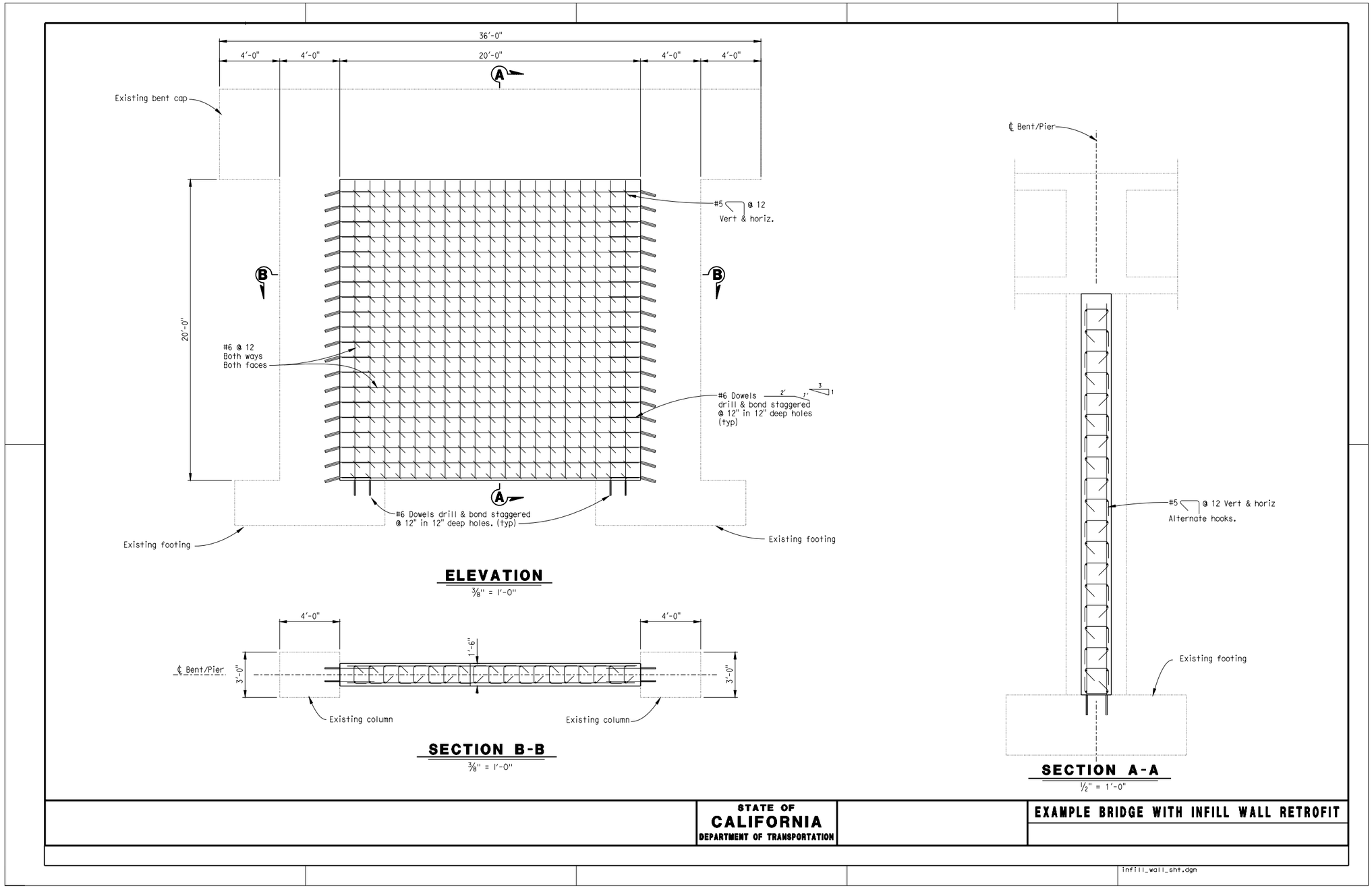
36'-0"
4'-0"
4'-0"
20'-0"
4'-0"
4'-0"
Existing bent cap
#5 @ 12
Vert & horiz.
20'-0"
#6 @ 12
Both ways
Both faces
#6 Dowels drill & bond staggered @ 12" in 12" deep holes (typ)
#6 Dowels drill & bond staggered @ 12" in 12" deep holes. (typ)
Existing footing
Existing footing
ELEVATION
3/8" = 1'-0"
4'-0"
4'-0"
1'-6"
℄ Bent/Pier
3'-0"
3'-0"
Existing column
Existing column
SECTION B-B
3/8" = 1'-0"
℄ Bent/Pier
#5 @ 12 Vert & horiz
Alternate hooks.
Existing footing
SECTION A-A
1/2" = 1'-0"
STATE OF
CALIFORNIA
DEPARTMENT OF TRANSPORTATION
EXAMPLE BRIDGE WITH INFILL WALL RETROFIT
infill_wall_sht.dgn

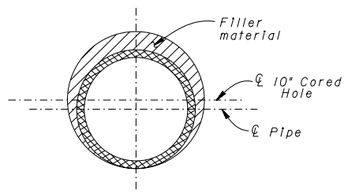

SECTION A-A

No Scale

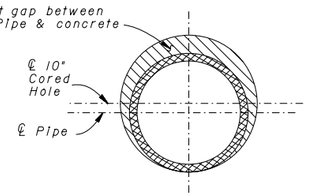

SECTION B-B

No Scale

Note:
Place 8XX-Strong Pipe parallel to girders

Cable restrainers inside pipe not shown.

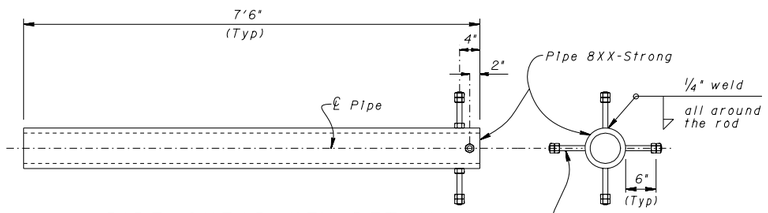

PIPE SHEAR KEY DETAIL

1"=1'0"

Note:
⊛ Surface of Anchorage zone to be placed normal to restrainer cable unit typical.

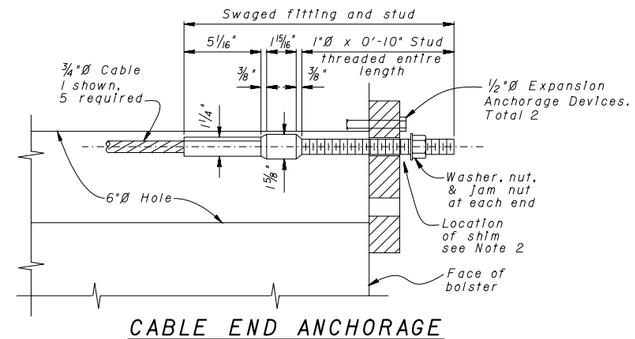

CABLE END ANCHORAGE

3"=1'0"

Note 1 For Shim thickness (dimension "a"), see table.

Cable Installation Notes:

1- At Bent side

Place Anchor Plate flush against Bolster face. Tighten nuts snug against Anchor Plate. Place thread locking compound

2- At Hinge side

Place Shims between Anchor Plate and Bolster face. Tighten nuts to 100 ft-lbs torque

Place thread locking fluid

Remove shims

Shim thickness to be in accordance with table

Structure Temp. (°F)	Shim Thickness (in)	
	Left Bridge	Right Bridge
30	0.5	0.5
50	1.25	1.25
70	2.0	2.0
90	2.75	2.75
110	3.5	3.5

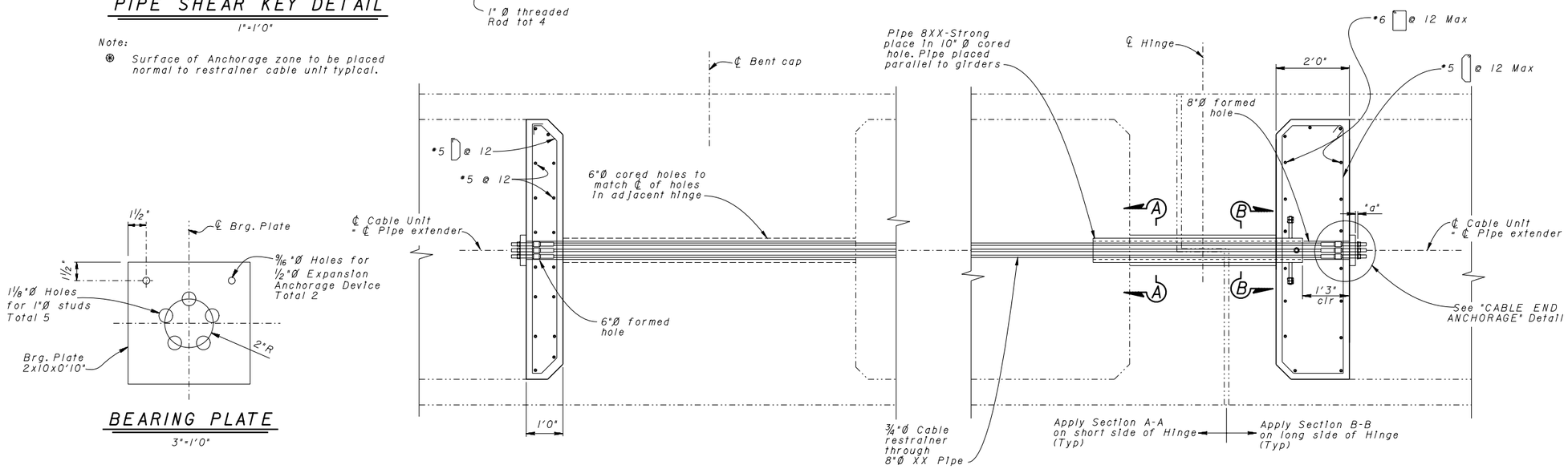

BEARING PLATE

3"=1'0"

STATE OF CALIFORNIA
DEPARTMENT OF TRANSPORTATION

EXAMPLE PIPE SEAT EXTENDER & CABLE RESTRAINER DETAIL

hinge_rest_d.dgn

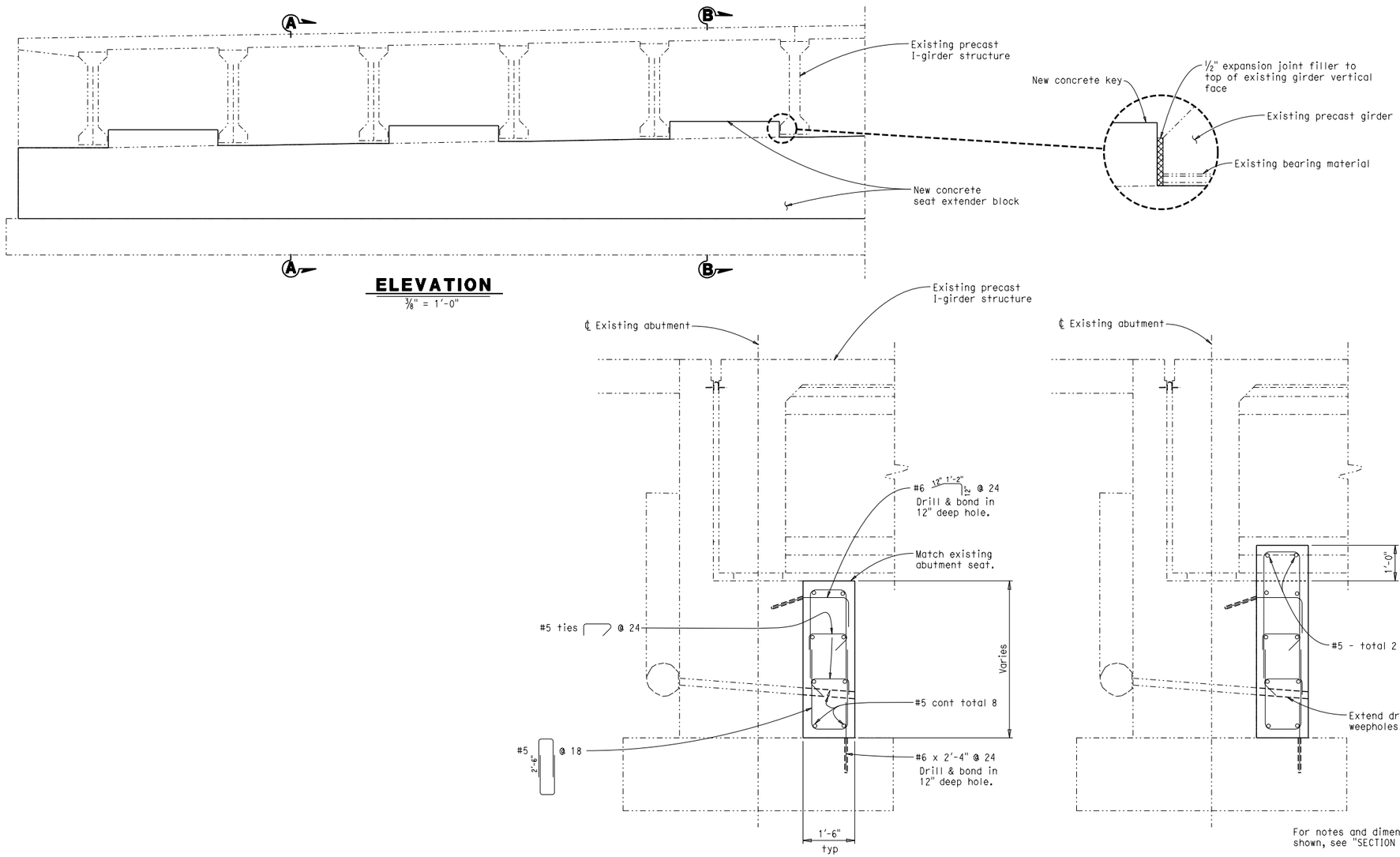

STATE OF CALIFORNIA
DEPARTMENT OF TRANSPORTATION

EXAMPLE ABUTMENT SEAT EXTENDER RETROFIT

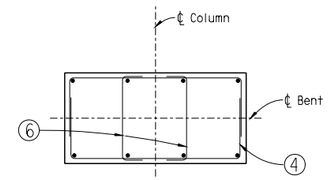

RECTANGULAR COLUMN

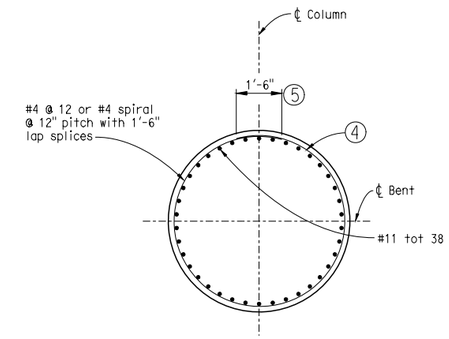

ROUND COLUMN

SECTION A-A

½"=1'-0"

① Lap splice at base of column.

② No top mat of reinforcement, no stirrups.

③ No tension tie from pile to footing.

④ Inadequate confinement/shear reinforcement in column.

⑤ Lap splice in transverse column reinforcement.

⑥ Non seismic hook in transverse reinforcement.

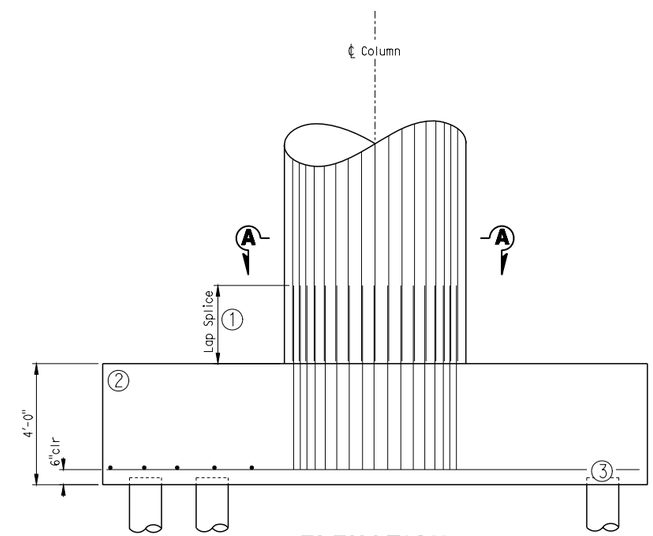

ELEVATION

½"=1'-0"

Round column shown
rectangular column similar

STATE OF
CALIFORNIA
DEPARTMENT OF TRANSPORTATION

EXAMPLE PRE-1971

COLUMN AND FOOTING DETAILS

old-school_ftg.dgn